COUNCIL AGENDA
Tuesday, January 2, 2018
6:00 P.M., Council Chambers

1. **Call To Order**
   Invocation
   Pledge of Allegiance of the United States of America

2. **Roll Call**

3. **Presentations**

4. **Finalization Of Consent Agenda**

5. **Reports And Communications**

6. **Citizen Requests And Petitions**

7. **Public Hearings**

8. **Consent Agenda**

   1. Minutes Of The December 18, 2017 Council Meeting

      Documents:

      DEC 18 2017.PDF

9. **Resolutions**

   1. RESOLUTION NO. 2018-001

      A RESOLUTION recognizing Barbara L. Hogelin upon her retirement of active service as City Clerk for the City of Joplin.

      Documents:

      RS2018-001.PDF

10. **Ordinances - Emergency**

    1. COUNCIL BILL NO. 2018-100
       AN ORDINANCE approving Work Authorization with Burns and McDonnell Engineering Inc. in the not to exceed amount of One Hundred Ninety Four Thousand, One Hundred Seventy and No/100 Dollars ($194,170.00) for engineering services associated with the Engineering Services Design, Bidding and Pre-construction Management for the Installation of a Parallel Force Main from Filmore Bridge Lift Station to the Gravity line on Apricot road; authorizing the City Manager to execute and containing an emergency clause.

       Documents:

       PROPOSED SCOPE OF SERVICES_V2.PDF
       JOPLIN ENGINEERING WORK AUTHORIZATION FORM - 2018.PDF
       CB 2018-100.PDF
       SUMARY CB 2018-100 FILMORE BRIDGE PARALLEL FORCE MAIN.PDF

11. **Ordinances - First Reading**

    1. COUNCIL BILL NO. 2018-015
       AN ORDINANCE amending Chapter 42, Courts, Article II, Municipal Court, Section 42-35, Court costs and other fees, by repealing Section 42-35 subsections (f) and (i).

       Documents:

       SUMMARY SHEET CB2018-015 - REPEAL SECTION 42-35 COURT COSTS SUBSECTIONS F AND I WARRANT ISSUANCE FEE AND BOOKING FEE.PDF
       CB 2018-015 - REPEAL SECTION 42-35 COURT COSTS SUBSECTIONS F AND I WARRANT ISSUANCE FEE AND BOOKING FEE.PDF

    2. COUNCIL BILL NO 2018-250
       AN ORDINANCE establishing grades and accepting the Plat of KUM AND GO Addition located Southwest Corner of Glendale Avenue and Main Street, in the City of Joplin, Newton County, Missouri.

       Documents:

       CB 2018-250 STAFF.PDF
       CB 2018-250 SUMMARY.PDF
       CB 2018-250 MIN.PDF
       CB 2018-250.PDF

12. **Ordinances - Second Reading And Third Reading**

13. **Unfinished Business**

14. **New Business**

    1. CASE 037-17 SITE PLAN
       CASE 037-17: 2015 East 32nd Street (vacant lot located west of 2023 East 32nd Street) - A request to
       Review the Site Plan for a fast food restaurant – Reyling Design & Consulting.

       Documents:

       CASE 037-17 STAFF REPORT.PDF
       CASE 037-17 MINUTES.PDF
       SITE PLAN SUMMARY.PDF

    2. News From The PIO

Anyone wishing to address the Council should step to the podium and state his/her name and address. If the matter is not a Public Hearing, a request to speak to the Council should be prepared prior to the meeting. Speaking time will be limited to five (5) minutes.

Sound enhancement units are available for hearing impaired customers who provide a form of identification as security, which will be returned to the customer upon the return of the unit.

Those in need of disability-related auxiliary aids or services should contact the City Clerk's office at (417) 624-0820, ext. 220 no later than 48 hours prior to the

meeting.

Notice posted at ____ p.m. on this the __ day of ____, ____. (RSMo 610.020)

CITY OF JOPLIN
CITY COUNCIL MEETING
MINUTES December 18, 2017

CALL TO ORDER

The regular meeting for the Joplin City Council was called to order at 6:00 p.m.by Mayor Michael Seibert.

INVOCATION - read by Assistant City Clerk Barbara Gollhofer

PLEDGE OF ALLEGIANCE to the United States of America was led by Mr. McCreary.

ROLL CALL – Answering Roll Call were Taylor Brown, Melodee Colbert-Kean, Miranda Lewis, Dan McCreary, Michael Seibert, Gary Shaw; Ryan Stanley, Phil Stinnett, and Jim West. Also in attendance were City Manager Sam Anselm and City Attorney Peter Edwards.

PRESENTATIONS
Aaron Jeffries, Deputy Director of Missouri Department of Conservation, gave an update on Wildcat Glades. Mr. Jeffries stated the department looks forward to an opportunity to renew a partnership with the City of Joplin and Wildcat Glades. Be patient, trust the department, give us time to develop a plan and to development a partnership with the local Audubon chapter, local volunteers and the city of Joplin.
Council Member Stanley thanked Mr. Jeffries for presenting an update on Wildcat Glades and thanked all the volunteers who were in audience.
Council Member McCreary asked if Mr. Jeffries could explain the basics of what some of the issues are. Mr. Jeffries stated the department knows what it costs to operate the facility, but depending on the level of the partnerships that we can develop with the city, local volunteers and the 5013C that is developing right now, we may be able to reduce the costs to the department which means we don't have to make as many tough decisions on programs and services in other parts of the state. We have a flat budget right now and for us to take on this facility would be a huge cost. We're going to have to change the operations of things we're doing in other parts of the state, but when you can get a helping hand from a partner like the city or a local chapter, it would make it a lot easier on the department as we look ahead to future years.

Retiring City Clerk Barbara Hogelin presented a never-before-done proclamation of appreciation and gratitude to the city council. Barbara is retiring January 2, 2018 and took this opportunity review her 24 years of service by highlighting some of her accomplishments during her career and thanking the present and past councils for making her tenure a privilege and a joy to serve. The council was pleased and thanked Barbara for her service.

FINALIZATION OF CONSENT AGENDA –There being no further business to come before the Council, the Consent Agenda was finalized.

REPORTS AND COMMUNICATIONS

CITIZEN REQUESTS AND PETITIONS

PUBLIC HEARINGS

CONSENT AGENDA – Motion by Mr. Stanley, second by Mr. West, to approve the Consent Agenda. Voting in favor were Council Members: Brown, Colbert-Kean, Lewis, McCreary, Seibert, Shaw, Stanley, Stinnett and West, 9. Nays: 0.
Minutes of the November 13, 2017 Special City Council Meeting

Minutes of the December 4, 2017 Council Meeting

COUNCIL BILL NO. 2017-281 - AN ORDINANCE amending Ordinance No. 2004-256, passed by the Council of the City of Joplin, Missouri, November 15, 2004, by removing from District C-O and including in District R-3 property as described below and in the City of Joplin, Jasper County, Missouri. **Ordinance No. 2017-188**

COUNCIL BILL NO. 2017-282 - AN ORDINANCE amending Ordinance No. 2004-256, passed by the Council of the City of Joplin, Missouri, November 15, 2004, by removing from District R-2 and including in District C-3 property as described below and located 1521 S. Broadway in the City of Joplin, Jasper County, Missouri. **Ordinance No. 2017-189**

COUNCIL BILL NO. 2017-283 - AN ORDINANCE amending Ordinance No. 2004-256, passed by the Council of the City of Joplin, Missouri, November 15, 2004, by designating Memorial Hall as an Historic Landmark and include in a Historic Preservation Overlay District as described below and located 212 West 8th Street in the City of Joplin, Jasper County, Missouri. **Ordinance No. 2017-190**

COUNCIL BILL NO. 2017-527 - AN ORDINANCE amending Section 26-91, Building Permit fees; re-inspection fee, of Article IV, Permits and Fees, of Chapter 26, Buildings and Building Regulations, of the Code of Ordinances of the City of Joplin, by amending Section 26-91, Building Permit fees; re-inspection fees, of Article IV, Permits and Fees, to implement certain fee changes; and setting a date when this Ordinance shall become effective. **Ordinance No. 2017-191**

COUNCIL BILL NO. 2017-528 - AN ORDINANCE repealing Section 58-68, Schedule of Fees, Article II, Fire Prevention Code, Division 2, International Fire Code, of Chapter 58, Fire Prevention and Protection, of the Code of Ordinances of the City of Joplin and enacting in lieu thereof a new Section 58-68, Schedule of Fees, Article II, Fire Prevention Code, Division 2, International Fire Code, of Chapter 58, Fire Prevention and Protection, of the Code of Ordinances of the City of Joplin to implement certain fee changes; and setting a date when this Ordinance shall become effective. **Ordinance No. 2017-192**

COUNCIL BILL NO. 2017-529 - AN ORDINANCE repealing Section 106-62, Inspection and Permit Fees, Article III, Improvement Permits, and Section 106-93, Fees and Charges, Article IV, Excavations, of Chapter 106, Streets, Sidewalk and Other Public Places, of the Code of Ordinances of the City of Joplin and enacting in lieu thereof a new Section 106-62, Plan Review and Permit Fees, Article III, Improvement Permits, and Section 106-93, Fees and Charges, Article IV, Excavations, of Chapter 106, Streets, Sidewalks and Other Public Places, of the Code of Ordinances of the City of Joplin to implement certain fee changes; and setting a date when this Ordinance shall become effective. **Ordinance No. 2017-193**

COUNCIL BILL NO. 2017-530 - AN ORDINANCE repealing Section 29A-2514, Fees, Article II, of Appendix 29A, of the Zoning Regulations of the City of Joplin and enacting in lieu thereof a new Section 29A-2514, Fees, of Appendix 29A, of the Zoning Regulations of the Code of Ordinances of the City of Joplin to implement certain fee changes; and setting a date when this Ordinance shall become effective. **Ordinance No. 2017-194**

COUNCIL BILL NO. 2017-531 - AN ORDINANCE repealing Section 34-2, Prices of lots and grave rights; charge for setting stones, of Chapter 34, Cemeteries, of the Code of Ordinances of the City of Joplin and enacting in lieu thereof a new Section 34-2, Prices of lots and grave rights; charge for setting stones, of Chapter 34, Cemeteries, of the Code of Ordinances of the City of Joplin to implement certain fee changes; and setting a date when this Ordinance shall become effective. **Ordinance No. 2017-195**

COUNCIL BILL NO. 2017-532 - AN ORDINANCE repealing Section 30-121, License Classifications and Fees, of Article III, Licenses, Division 2, Schedule of Fees, of Chapter 30, Businesses, of the Code of Ordinances of the City of Joplin and enacting in lieu thereof a new Section 30-121, License Classifications and Fees, of Article III, Licenses, Division 2, Schedule of Fees, of Chapter 30, Businesses, of the Code of Ordinances of the City of Joplin to implement certain fee changes; and setting a date when this Ordinance shall become effective. **Ordinance No. 2017-196**

COUNCIL BILL NO. 2017-533 - AN ORDINANCE repealing Section 86-5, Fees at Schifferdecker Golf Course, of Article I, In General, and Section 86-6, Fees for Parks Programs and Parks Facilities, of Article I, In General, and Section 86-152, Admission Fee, of Article V, Swimming Pools, of Chapter 86, Parks and Recreation, of the Code of Ordinances of the City of Joplin and enacting in lieu thereof a new Section 86-5, Fees at Schifferdecker Golf Course, of Article I, In General, and Section 86-6, Fees for Parks Programs and Parks Facilities, of Article I, In General, and Section 86-152, Admission Fee, of Article V, Swimming Pools, of Chapter 86, Parks and Recreation, of the Code of Ordinances of the City of Joplin to implement certain fee changes and make other changes; and setting a date when this Ordinance shall become effective. **Ordinance No. 2017-197**

COUNCIL BILL NO. 2017-534 - AN ORDINANCE repealing Section 9, Filing Fees, of the Subdivision Regulations, Appendix 29B as adopted by Ordinance No. 97-161 of the City of Joplin and enacting in lieu thereof a new Section 9, Filing Fees, of the Subdivision Regulations, Appendix 29B of the City of Joplin to implement certain fee changes; and setting a date when this Ordinance shall become effective. **Ordinance No. 2017-198**

COUNCIL BILL NO. 2017-535 - AN ORDINANCE repealing Section 6-35, Permit, Article II, Signs, of Chapter 6, Advertising, of the Code of Ordinances of the City of Joplin and enacting in lieu thereof a new Section 6-35, Permit, Article II, Signs, of Chapter 6, Advertising, of the Code of Ordinances of the City of Joplin to implement certain fee changes; and setting a date when this Ordinance shall become effective. **Ordinance No. 2017-199**

COUNCIL BILL NO. 2017-536 - AN ORDINANCE repealing Section 118-211, Hauled Wastewater Fee, of Article II, Sewers and Sewage Disposal, of Division 6, Rates and Charges, and Section 118-235, Permit fee, Connection Fee, and other Sewer Fees, of Article II, Sewers and Sewage Disposal, of Division 7, Building Sewers, of Chapter 118, Utilities, of the Code of Ordinances of the City of Joplin, and enacting in lieu thereof a new Section 118-211, Hauled Wastewater Fee, of Article II, Sewers and Sewage Disposal, of Division 6, Rates and Charges, and Section 118-235, Permit Fee, Connection Fee, and other Sewer Fees, of Article II, Sewers and Sewage Disposal, of Division 7, Building Sewers, of Chapter 118, Utilities, of the Code of Ordinances of the City of Joplin to implement certain fee changes; and setting a date when this Ordinance shall become effective. **Ordinance No. 2017-200**

RESOLUTIONS

ORDINANCES-EMERGENCY

Mr. Shaw introduced COUNCIL BILL NO. 2017 - 169 - AN ORDINANCE approving Work Authorization with Allgeier-Martin & Associates Inc. in the not to exceed amount of Two Hundred and Forty Thousand, Thirty-Two and No/100 Dollars ($240,032.00) for engineering services associated with the Engineering Services Design, Bidding and Construction Management for the Rehabilitation of the Tin Cup Lift Station and containing an emergency clause. Motion by Mr. Shaw, second by Mr. Brown that Council Bill No. 2017-169 be approved on an emergency basis. Voting in favor were Council Members: Brown, Colbert-Kean, Lewis, McCreary, Seibert, Shaw, Stanley, Stinnett and West, 9. Nays: 0. The council bill was declared adopted and entitled **Ordinance No. 2017-201**.

Mr. West introduced COUNCIL BILL NO. 2017 - 170 - AN ORDINANCE authorizing the City of Joplin to enter into an agreement with Hunter Chase and Associates for the construction of sidewalk improvements in the Neighborhood Improvement District IV, in the amount of Two Hundred Twelve Thousand Ninety and 80/100 Dollars ($212,090.80); authorizing the City Manager or his designee to execute the same by and on behalf of the City of Joplin; and containing an emergency clause. Motion by Mr. West, second by Mr. Stanley that Council Bill No. 2017-170 be approved on an emergency basis. Voting in favor were Council Members: Brown, Colbert-Kean, Lewis, McCreary, Seibert, Shaw, Stanley, Stinnett and West, 9. Nays: 0. The council bill was declared adopted and entitled **Ordinance No. 2017-202**.

Mr. Stanley introduced COUNCIL BILL NO. 2017 - 537 - AN ORDINANCE amending the Annual Budget of the City of Joplin for the Fiscal Year 2017-2018 as adopted by Ordinance 2017-167 on October 16, 2017, to adjust appropriations and containing an emergency clause. Motion by Mr. Stanley, second by Mr. Shaw that Council Bill No. 2017-537 be approved on emergency basis. Voting in favor were Council Members: Brown, Colbert-Kean, Lewis, McCreary, Seibert, Shaw, Stanley, Stinnett and West, 9. Nays: 0. The council bill was declared adopted and entitled **Ordinance No. 2017-203**.

ORDINANCES – FIRST READING

ORDINANCES – SECOND AND THIRD READING

Mr. Stanley introduced COUNCIL BILL NO. 2017-014 - Approving a supplemental plan for an industrial development project consisting of the acquisition, construction, improvement and equipping of a frozen foods manufacturing facility; authorizing the City of Joplin, Missouri to issue its taxable industrial development revenue bonds in a principal amount not to exceed $10,035,000 to finance additional project costs; authorizing and approving certain documents; and authorizing certain other actions in connection with the issuance of the Bonds. Motion by Mr. Stanley, second by Mr. Brown that Council Bill No. 2017-014 be passed on Second Reading, advanced to Third Reading and passed. Voting in favor were Council Members: Brown, Colbert-Kean, Lewis, McCreary, Seibert, Shaw, Stanley, Stinnett and West, 9. Nays: 0. The council bill was declared adopted and entitled **Ordinance No. 2017-204**.

UNFINISHED BUSINESS

NEW BUSINESS:

News from the PIO

The City of Joplin is finalizing the design plans for the Mohaska Trail Project which travels approximately two miles, winding through areas south and east of Cunningham and Mercy Parks. This trail project is part of the City's overall trails plan.

An open house public meeting has been scheduled from 4:30 p.m. to 6 p.m. on Tuesday, December 19 in the Irving Elementary School, 2901 McClelland Boulevard. Citizens are encouraged to drop by any time during these hours and view the plans. Engineers with the City of Joplin and Olsson and Associates will be there to discuss the project and answer any questions the public might have.

The City of Joplin offices will be closed on Monday, December 25 and Monday, January 1 for the Christmas and New Year's holiday. This also includes the Joplin Recycling Center, MAPS and the Sunshine Lamp Trolley services.

The Police and Fire Departments will continue to operate throughout holidays, and be here for our citizens if they should need them.

In addition, during two these holiday weeks, residential trash service moves one day forward. Monday customers will have service on Tuesday and Tuesday customers will have Wednesday pick-up and so on continuing through Saturday for Friday customers. This shift will occur for both the week of Christmas and the week of New Year's Day.
We remind everyone that City announcements can also be found on the City's website, Facebook page and Twitter account.

In closing, on behalf of all of the City staff, we'd like to wish all of our citizens Merry Christmas, Happy Holidays and a Joy-filled and Healthy new year! Thank you.

Mayor Seibert stated he had the privilege of attending the rededication of the stained-glass window on the mezzanine that was originally in the Newman building before renovators installed an alternate stained-glass window. Mayor Seibert commended City Clerk Barbara Hogelin for her passionate efforts to continue to support the historical aspect of this building. Many thanks also to city staff members: City Hall: Jeff Tennis, Rick Allen, Bruce Thomasson;' Streets Dept.: Monte Johnson, David Bond, Chris Keith, Randy Morris; Parks Dept.: Jonathan Alejandro, Aaron Callis, Jake Cowen, Mike McDaniel and Josh Pierson. These employees were responsible for taking out the previous window and installing the new window, which weighs over 500 pounds. Mayor Seibert encourage everyone to visit City Hall to view the gorgeous window.

Mr. Shaw recognized and thanked an audience member, Gary Burton, who is a former council member and a passionate supporter of the Nature Center.

Mr. Brown stated his wife had attended the opening of Natural Grocers and that is was quite successful. Mr. Brown stated the store is going to be a great addition to our community.

Mayor Seibert closed the final formal city council meeting of 2017 with Happy Holiday wishes to all.

There being no further business, the meeting was adjourned at 6:30 p.m.

Respectfully,

_____

Barbara J. Gollhofer, Assistant City Clerk, MRCC

RESOLUTION 2018-001

A RESOLUTION recognizing Barbara L. Hogelin upon her retirement of active service as City Clerk for the City of Joplin.

WHEREAS, on Tuesday January 2, 2018, Barbara L. Hogelin retired as City Clerk for the City of Joplin, Missouri after 24 years of dedicated service; and

WHEREAS, Barbara was appointed City Clerk in 1997 by Mayor Ron Richard; and

WHEREAS, during her tenure in the City Clerk's office, Barbara served under 12 mayors, including Cheryl Dandridge, Bernie Johnson, Ron Richard, Earl Carr, Darieus Adams, Richard Russell, Phil Stinnett, Jon Tupper, Gary Shaw, Mike Woolston, Melodee Colbert-Kean and Michael Seibert; and had the pleasure of working with over 40 council members; and

WHEREAS, Barbara prepared hundreds of agendas and attended over 550 regular council meetings, numerous pre-meetings, informal meetings, special meetings and work sessions; and managed the archiving of over 5500 ordinances and 1150 resolutions during her career; and

WHEREAS, Barbara's vision, passion and love of her city has been instrumental in restoring the Newman building into a shining example of historic preservation that is much more than a place for city government business; it has become a museum with priceless and meaningful artwork, artifacts and displays; and

WHEREAS, Barbara Hogelin was an enthusiastic leader at work and in the community, serving in many organizations and accumulating an impressive list of accomplishments, recognitions and awards including the prestigious Missouri City Clerks and Finance Officers Association Outstanding City Clerk for 2017, and being named a finalist for Joplin's Annie Baxter Award.

BE IT RESOLVED BY THE COUNCIL OF THE CITY OF JOPLIN, MISSOURI, as follows:

Section 1. The City of Joplin does hereby recognize and extend appreciation to Barbara L. Hogelin for her dedicated service of Twenty-Four years.

Section 2. That the people of Joplin, Missouri do hereby extend best wishes to Barbara for many enjoyable and successful years.

Section 3. That this Resolution shall be in full force and effect from and after the date of its passage and approval.

PASSED BY THE COUNCIL OF THE CITY OF JOPLIN, MISSOURI, this 2nd day of January 2018.

_____

Michael L. Seibert, Mayor

ATTEST:

_____

Barbara Gollhofer, Assistant City Clerk

EXHIBIT A

SCOPE OF SERVICES

FILMORE / TIN CUP FORCEMAIN DESIGN

BACKGROUND INFORMATION

The *Operational Assessment of the Filmore and Tin Cup Lift Stations* was completed in November 2017, identified the need to install a separate force main to serve the Filmore Bridge Lift Station to keep pace with the City's growing wastewater demands. The report recommends the design and construction of a separate force main to convey the Filmore Bridge Lift Station flows. The new forcemain will generally run from the Filmore Bridge lift station South along Coyote Drive, then West along Apricot Drive to the existing manhole on the 42-inch diameter Shoal Creek gravity interceptor sewer.

The work shall generally consist of providing preliminary design, survey, geotechnical assessment, route layout confirmation, environmental review, hydraulic review, multi-agency coordination and permitting, final design construction plans and specifications, bid phase services, and construction phase services.

TASK SERIES 100 – PROJECT COORDINATION, COMMUNICATION, AND MANAGEMENT

Task 101 - Project Management/Administration

Provide the management functions required to successfully complete the scope of work. Tasks include:

A. Correspondence with the City of Joplin, MO (City)
B. Consultation with City staff
C. Supervision and coordination of services
D. Implementation of a project specific work plan
E. Implementation of a quality control/quality assurance plan
F. Scheduling and assignment of personnel resources
G. Monitoring of work progress
H. Invoicing for work performed
I. Providing project status updates to City

Task 102 – Preparation of Design Schedule

Develop a project schedule outlining the tasks and major milestone dates to be performed throughout the project design phase. Schedule will be provided to the City for review and comment.

Task 103 – Conduct Project Kickoff Meeting with City Staff

Attend a project kick-off meeting to be held with City staff. The meeting shall include discussion of pertinent items for the project such as:

A. Present project background and overview.
B. Introduce key staff involved in the project including City personnel who are to provide information/services.
C. Determine lines of communication and project contacts (contact list to be developed).
D. Identify available existing data and exchange.
E. Discuss key issues, objectives and goals.
F. Review the preliminary project schedule and milestones.
G. Discuss issues of particular concern for the City.
H. Define sub-consultants and their roles.
I. Outline possible community concerns, neighboring residents, businesses, easements, etc.
J. Discuss considerations for inter-connections with the existing system.
K. Discuss other pertinent items.
L. A meeting agenda and subsequent meeting minutes will be distributed to all meeting participants.

Task 104 – Data Collection & Review

Review available information from the City related to the project. Identify and request any additional information that may be helpful or pertinent to the work. Information may include copies of existing reports, record drawings, GIS data, existing easement documentation and/or existing permits.

Task 105 – Attend Monthly Progress Meetings

Project Manager and necessary team members will attend monthly progress meetings with City staff to review work progress to date, upcoming work activities, actions required by the City, design and/or schedule concerns, and any other items that may be relevant to the project. A meeting agenda and subsequent meeting minutes will be distributed to all meeting participants. 30%, 60% and 90% review meetings will be included or combined with the monthly progress meetings if possible.

Task 106 – Coordination with Sub-consultants

Retain sub-consultants for necessary tasks such as survey and geotechnical services. Coordinate and work with sub-consultants as necessary throughout the project.

TASK SERIES 200 – PRELIMINARY DESIGN SERVICES

Task 201 – Conduct Survey Services

A. Topographic and Utility Survey
   1. A topographic and utility survey of the project corridor will be prepared. Existing utilities will be located and shown as part of the survey drawings.

Task 202 – Perform Geotechnical Investigations

A. Perform Soil Borings
   1. Soil borings are anticipated to be taken at 200-foot intervals along the project alignment as terrain and geography allows.
   2. Soils borings are anticipated to be augered to refusal or to 10-foot in depth.
   3. Soil samples will be tested and a written report provided.

Task 203 – Environmental Services and Permitting

Wetlands:

The U.S. Army Corps of Engineers (USACE) has jurisdiction over wetlands and other waters of the U.S. in accordance with Section 404 of the Clean Water Act. To determine the location and boundaries of wetlands, streams, and navigable waterways that may be affected by the proposed project, Burns & McDonnell proposes to conduct a desktop evaluation, perform a wetland delineation, write a wetland delineation report, and coordinate permitting efforts to obtain the necessary USACE permits for the proposed project.

Conduct a desktop evaluation of the project using soil surveys, site topographic maps, and National Wetland Inventory (NWI) maps to identify potential jurisdictional areas. Information reviewed will include 7.5-minute topographic maps, NWI maps, National Hydrography Dataset (NHD), Federal Emergency Management Area (FEMA) floodplain maps, the local county soil survey, and available aerial photography for the project corridor.

Conduct a field visit to evaluate the proposed project corridor for the presence of wetlands and other waters according to USACE requirements. The site visit will consist of a pedestrian survey by a wetland scientist and a global positioning system (GPS) specialist to identify any wetlands or other water bodies of the U.S. that may be present and to record locations and boundaries using GPS. These areas will be delineated in accordance with the 1987 Corps of Engineers Wetlands Delineation Manual (USACE Manual) and the Regional Supplement to the Corps of Engineers Wetland Delineation Manual, Version

2.0: Eastern Mountains and Piedmont Region (Regional Supplement). In addition, Burns & McDonnell will gather information on the hydric soils, wetland hydrology, and upland and wetland vegetation of the project corridor. The wetland scientist will assess whether a delineated area is likely to be considered under the jurisdiction of the USACE by determining if a hydrologic connection to waters of the U.S. exists. As part of this effort, photographs will also be taken onsite to provide a visual documentation of any identified features.

Based on the desktop evaluation and wetland delineation, Burns & McDonnell will prepare a wetland delineation letter report describing the background research, methodologies, and results. In addition, the report will include completed wetland determination data forms from the Regional Supplement, photographs of identified waters, and figures of the project corridor. Burns & McDonnell will provide the draft letter report to the City for review and one round of comments. Burns & McDonnell will address any comments, finalize the report, and provide a final electronic version to City. Up to three hard copies of the report can be provided, if requested.

Prepare a permit application and assist City with follow-up support throughout the review process. Burns & McDonnell will submit the permit application package and coordinate with the USACE and respond to requests for additional information.

Threatened & Endangered (T&E) Species:

Complete a desktop review of available information from the U.S. Fish and Wildlife Service (USFWS) and Missouri Department of Conservation (MDC) to determine which protected species and habitat could occur within the county and vicinity of the proposed project.

Complete a protected species habitat assessment field survey for the proposed project. The habitat assessment survey will be conducted at the same time as the wetland delineation field survey. Photographs will be taken to document any wildlife habitat within and adjacent to the proposed project. The location of any observed potential protected species habitats will be photographed and delineated using a GPS with sub-meter accuracy.

Based on the results of the desktop review of available information and habitat assessment field survey, Burns & McDonnell will prepare a protected species habitat assessment letter report. The protected species habitat assessment letter report would be suitable for submittal to the USFWS and MDC to obtain their concurrence with the findings of the habitat assessment.

Provide the draft habitat assessment letter report to the City for review and one round of comments. Burns & McDonnell will address any comments, finalize the report, and provide a final electronic version to City. If requested by the City, the protected species habitat assessment letter report will be submitted to the USFWS and MDC for their review and concurrence with the findings and conclusions presented in the habitat assessment letter report.

Burns & McDonnell will assist City with follow-up support throughout the USFWS and MDC project review process and will answer questions and respond to requests for additional information.

Cultural Resources:

A USACE permit may be required for the proposed project. As such, Burns & McDonnell would coordinate with the Missouri State Historic Preservation Office (SHPO) to determine requirements for cultural resources clearance. A desktop cultural resources study would be completed by Burns & McDonnell archaeologists by reviewing SHPO cultural resources database, cultural resources management reports from the vicinity, and historic topographical maps. It is assumed that a cultural resources field survey would be required. Burns & McDonnell archaeologists would prepare a cultural

resources report that includes the results of background research and field survey. The report would be submitted to the City for review and one round of comments.

Construction within a Floodplain Permit

Will provide permitting specialists to draft the construction within a floodplain permit application and submittal to City for one round of comments. It is assumed that the City will submit the final application package to Newton County to obtain the permit.

State and/or County Road Crossing Permit:

Depending on which entity claims jurisdiction of the roads that are crossed, the project may require State and/or County Road Crossing Permits. Burns & McDonnell will assist City by coordinating with Missouri Department of Transportation (MoDOT) and/or Newton County to obtain permits for construction within road rights-of-way and any proposed crossings of Apricot Lane and Coyote Drive. Burns & McDonnell will work with City to prepare permit application packages with necessary support drawings for submittal to MoDOT and/or Newton County for review and approval.

Assumptions for All Environmental Tasks:

- City will provide landowner permission to access the project route.
- The wetland delineation will be conducted under normal circumstances with no atypical situations as defined by the USACE Manual.
- It is assumed that the wetland delineation will be conducted within the normal growing season.
- Delays causing demobilization associated with weather, access, and other unforeseen events are not included.
- Species specific presence/absence surveys requiring a state or federal permit will not be required.
- If the USFWS or MDC require species specific presence/absence surveys requiring a state or federal permit, Burns & McDonnell will submit a separate scope and cost estimate for the species-specific presence/absence survey effort.
- All tree removal for the project will occur from October 1 to March 31 to avoid impacting potential summer maternity roosting habitat for protected bat species.
- The habitat assessment field survey will occur at the same time as the wetland field work.
- Efforts and cost for mitigation associated with wetlands or protected species are not included.
- No cost for cultural resource artifact collection or curation is included with this scope and cost estimate. If collection and/or removal of artifacts from any given property or properties is required, then written and signed authorization from each land owner to remove artifacts from their property must be obtained by City and provided to Burns & McDonnell.
- If cultural or historic resources are identified that could be eligible for the National Register of Historic Places, additional investigations may be necessary and a cost estimate can be provided.
- Cultural resources study does not include deep dig testing.
- A HEC/RAS study would not be required to obtain a construction within a floodplain permit.
- Six routine construction inspections and five rainfall event inspections would occur during construction. Following construction, three additional inspections during site restoration would occur.

Task 204 – Preparation of Preliminary Design Memorandum

A. Evaluate up to three potential project alignments and prepare a preliminary alignment memorandum. This will include a hydraulic analysis that will evaluate the forcemain size and material. A planning level opinion of probable construction cost will be included for the evaluated alternatives.

Task 205 – Predesign Review Meeting

A predesign review meeting will be held at City offices to present and discuss the findings of the preliminary design memorandum. Meeting minutes, including action items will be distributed to all participants.

Task 206 – Preparation of 30% Design Documents

A. Preparation of 30% Design Documents
   1. Project team will generate base plan sheets utilizing aerial mapping and survey data. Plan sheets will be developed to a 30% level for review of pipeline alignment.
   2. Plan sheets shall be 22" X 34".
   3. Pipeline profiles will not be developed at this level of design. Profiles will be developed after the horizontal alignment is set.
   4. Two (2) full sized drawing sets, and three (3) half sized drawing sets will be provided to the City for review. Electronic copies may also be provided if preferred.

B. 30% Design Review Meeting
   1. A design review meeting will be held with City staff. The 30% design documents will be presented and reviewed in detail with the City. City staff may provide written comments to be presented at the 30% design meeting. Meeting minutes, including a list of action items, will be distributed to all meeting participants.
   2. Once 30% design plans have been approved by City and forcemain alignment has been set, easement preparation will commence as outlined in Task 302.

C. Evaluation of Filmore Bridge Lift Station Operation
   Conduct an evaluation of the existing operations of the Filmore Bridge lift station including the new forcemain. Recommendations for any necessary changes will be documented in a technical memorandum

TASK SERIES 300 – FINAL DESIGN SERVICES

Task 301 – Preparation of 60% Design Documents

A. Prepare 60% Design Documents
   1. Plans shall be developed to the 60% design level.
   2. Plans will address 30% design review comments.
   3. 60% design plans shall include:
      a. Proposed alignment
      b. Ground surface profile
      c. Pipeline profile
      d. Buried utility crossings
      e. Pipeline crossing locations: Highway, Roads
      f. Proposed interconnect locations
      g. Additional detail drawings that are needed for final design.
   4. Two (2) full sized drawing sets, and three (3) half sized drawing sets will be provided to the City for review. Electronic copies may also be provided if preferred.

B. Prepare Preliminary Technical Specifications
   1. A listing of necessary technical specification sections will be developed. The technical specification sections will be developed to a 60% level.

C. Perform 60% Internal Quality Review
   1. The 60% design documents, including, plans, specifications and calculations, will undergo an internal quality review. Plans and specifications will be reviewed for design and construction considerations.

D. Prepare 60% Engineer's Opinion of Probable Construction Cost
   1. Based on the 60% design drawings, our project team will prepare the EOPCC for the project. This EOPCC will be submitted along with the design documents for review and comment by the City. Our EOPCC will be based on a combination of recent bid tabulation information, historical cost data, discussions with local suppliers and contractors, and RSMeans

Construction Cost Data. Relevant and significant assumptions will be included for reference. This EOPCC will include a 20% contingency.

E. Conduct 60% Design Review Meeting
   1. A design review meeting will be held with City staff. The 60% design documents will be presented and reviewed in detail with the City. City staff may provide written comments to be presented at the 60% design meeting. Meeting minutes, including a list of action items, will be distributed to all meeting participants.

Task 302 – Easements

A. Prepare Updated Easement Legal Descriptions and Exhibits
   1. Legal descriptions and exhibits will be prepared and provided to the City for up to five properties.
B. City is responsible for obtaining and filing signed easement documents.

Task 303 – Preparation of 90% Design Documents

A. Prepare 90% Design Documents
   1. Plans shall be refined to the 90% design level.
   2. Plans will address 60% design review comments.
   3. Temporary and permanent easements information, land ownership information and all design related appurtenances shall be included.
   4. Plans shall include sufficient detail for bidding.
   5. Plans will meet the requirements of the Missouri Department of Natural Resources.
   6. Two (2) full sized drawing sets, and three (3) half sized drawing sets will be provided to the City for review. Electronic copies may also be provided if preferred.
B. Finalize Technical Specifications
   1. All applicable technical specification sections will be finalized.
   2. Specifications will meet the requirements of the Missouri Department of Natural Resources.
C. Prepare Front End Specifications
   1. Non-technical front end specifications will be developed and provided for the City's review.
D. Prepare 90% Engineer's Opinion of Probable Construction Cost
   1. Based on the 90% design drawings, our project team will prepare the EOPCC for the project. This EOPCC will be submitted along with the design documents for review and comment by the City. Our EOPCC will be based on a combination of recent bid tabulation information, historical cost data, discussions with local suppliers and contractors, and RSMeans Construction Cost Data. Relevant and significant assumptions will be included for reference. This EOPCC will include a 15% contingency.
E. Conduct 90% Design Review Meeting
   1. A design review meeting will be held with City staff. The 90% design documents will be presented and reviewed in detail with the City. City staff may provide written comments to be presented at the 90% design meeting. Meeting minutes, including a list of action items, will be distributed to all meeting participants.
F. Submit Documents for State Review
   1. Plans, technical specifications and other necessary documentation will be submitted to the Missouri Department of Natural Resources for review and approval.

Task 304 – Preparation of 100% (Final) Design Documents

A. Prepare 100% (Final) Design Documents
   1. Plans and specifications shall be completed at the 100% design level. Two (2) full sized drawing sets, three (3) half sized drawing sets, and five (5) copies of the final specifications will be provided to the City. Final documents shall also be provided in AutoCAD (version 2014 or later), Microsoft Word, and Adobe Acrobat (.pdf) formats. These documents will be utilized as the Issued for Bid documents.
B. Prepare 100% Engineer's Opinion of Probable Construction Cost

1. Based on the 100% design drawings, our project team will prepare the EOPCC for the project. This EOPCC will include a 10% contingency.

TASK SERIES 400 – BID PHASE SERVICES

Task 401 – Prepare Advertisement for Bid

Prepare the bid advertisement which will specifically outline the work requirements, Contractor requirements, bond requirements, and important bid dates and times. We will coordinate with the City how the advertisement should be provided to potential Contractors.

Task 402 – Preparation and Distribution of Issued for Bid Documents

Coordinate bidding procedures with the City. We will provide up to ten (10) sets of hard copy documents for the City to have available for pickup at its office by prospective bidders. Provide electronic copies of the documents to prospective bidders at the City's request. The City shall maintain the official list of plan holders.

Task 403 – Preparation and Distribution of Addenda

Respond to questions from Contractors during the bidding process, assemble and transmit addenda information as necessary. The addenda will be incorporated into the Contract Documents.

Task 404 – Conduct Pre-Bid Conference with Prospective Bidders

Our Project Manager will attend the pre-bid conference to assist the City's staff in answering questions concerning the design of the project. The meeting agenda will cover important and noteworthy conditions or requirements associated with the bid and the work. Meeting minutes and the sign-in sheet will be distributed to meeting attendees and prospective bidders via addendum.

Task 405 – Provide Bid Opening Assistance

Our Project Manager will attend the bid opening and assist City staff with the bid opening. Bid conditions including discrepancies and irregularities will be documented.

Task 406 – Evaluation of Bids

All of the bids will be collected and evaluated for conformance, completeness, and costs. Irregularities will be documented. An overall bid tabulation will be developed showing all of the provided bid costs in a single spreadsheet. This bid tab will help identify computational errors and uncertainties in the bid process. Check the apparent low bidders' references to verify their qualifications, intent, and availability. Conversations with references will be well documented as to help support the recommendation for award.

Task 407 – Recommendation for Construction Contract Award

Provide a formal, written Contractor recommendation for Award, which can be presented to the Council. Our recommendations will consider Contractor's qualifications, reference checks, and other relevant considerations.

TASK SERIES 500 – CONSTRUCTION PHASE SERVICES

Task 501 – Attend a Pre-construction Conference

Participate in a pre-construction conference prior to commencement of Work at the Site.

Task 502 – Review Shop Drawings and Data Submittals

Receive, review, and accept shop drawings, samples, and data submitted by the Contractor as required by the Construction Contract Documents. Review and acceptance will only be to determine if the items covered by the submittals will, after installation or incorporation into the Work, conform to the

requirements in the Contract Documents and are compatible with the design concept of the completed Project as a functioning whole as indicated by the Contract Documents. The review and acceptance of a separate item as such will not indicate acceptance of the assembly in which the item functions. Review does not indicate a thorough review of all dimensions, quantities, and details of the material, equipment, device, or item covered. This task includes time to review up to sixteen (16) submittals for the Force Main project, including the initial review and one subsequent review.

Review and acceptance will not extend to means, methods, techniques, sequences or procedures of construction (except where a particular means, method, technique, sequence or procedure of construction is specifically and expressly called for by the Contract Documents) or to safety precautions or programs incident thereto.

Review and acceptance of shop drawings or samples shall not relieve Contractor from responsibility for any variation from the requirements of the Contract Documents unless Contractor has in writing called attention to each such variation at the time of submission as required by the Contract Documents and Burns and McDonnell has given written acceptance of each such variation by specific written notation thereof incorporated into or accompanying the shop drawing or sample acceptance; nor will any acceptance by Burns and McDonnell relieve Contractor from responsibility for complying with the requirements of the Contract Documents. Distribute Contractor's submittals as specified in the Construction Contract Documents.

Task 503 - Stormwater Routine Inspections:

Provide stormwater specialists to perform the routine inspections required by the Missouri Department of Natural Resources (MDNR) Construction Stormwater Permit and the initial training for the site personnel over the SWP3. This will include site inspections once every two weeks and within 24 hours of all rainfall events which exceed 0.5 inches in accordance with local weather results or rain gauge placed onsite. Each visit will include a meeting with the Site Manager and a review of the sites Best Management Practices (BMPs) to verify compliance with the SWP3 and an inspection report documenting the site compliance, issues, or no-compliances along with some potential recommendations, issues, or non-compliances. Site inspection reports with photographs will be provided to the City via email the following day in PDF format.

Task 504 – Prepare Conforming to Construction Record Drawings

Prepare conforming to construction drawings based solely on the red-line drawing markups provided by the Contractor and Resident Project Representative(s). In the case of discrepancies between the two sets of information, the Contractor's red-lines shall be followed unless directed differently by the City.

1. TERMS

1.1 Schedule: The services of the ENGINEER shall commence as soon as practicable after execution of this authorization, unless otherwise directed in writing, and shall be undertaken and completed is such sequence as to assure their expeditious completion in the light of the purposes of the authorization, but in any event, all of the services required hereunder for this Work Authorization scope of services shall be completed no later than September 1, 2018.

1.2 Distribution of compensation between individual tasks indicated in Section 2 may be altered as necessary to be consistent with services actually rendered, but shall not exceed the total compensation amount unless approved in writing by the OWNER.

2. PAYMENT

2.1 Payment to the ENGINEER shall be at the hourly labor rates and non-labor rates set forth in the Attchment Number Two to Exhibit A: "Schedule of Hourly Rates and Expenses"; with a total compensation not to exceed amount of $194,170.00, as set forth in Work Authorization Number BMC-OA-001 to the Agreement for Professional Engineering Consulting Services, Section 5.b, with the maximum fees broken down for respective services in more detail as follows:

Phase I Services	Estimated Fee
Project Management and Coordination	$37,440
Survey Services	$6,000
Geotechnical Investigations	$13,580
Preliminary Design Services	$70,973
Easement Preparations	$7,026
Final Design Services	$35,181
Bid Phase Services	$9,948
Construction Phase Services	$14,022
Total Estimated Maximum Fee	$194,170

END OF EXHIBIT A

CITY		ENGINEER	
CITY OF JOPLIN 602 S. MAIN STREET JOPLIN, MO 64801		Name: Burns & McDonnell Engineering Company Address: 9400 Ward Parkway, Kansas City, MO 64114	
Attention: Lynden Lawson Asst. Director of Public Works-Ops.		Attention: Bill Nash PROJECT MANAGER	
Department: PUBLIC WORKS		Phone: 816-916-3029	Fax: 816-822-3452
Phone: 417-624-0820 x560	Fax: 417-625-4738		

WORK AUTHORIZATION NUMBER BMC-OC-18-001
TO AGREEMENT FOR PROFESSIONAL ENGINEERING CONSULTING SERVICES

City and Engineer agree to amend their Agreement for Professional Engineering Consulting Services to include a scope of work and fees for engineering services, by adding the following terms to their Agreement.

1. **Services**. The City agrees to engage the services of the Engineer and the Engineer agrees to perform the services hereinafter set forth in connection with projects described in ***Exhibit A***.

2. **Addition to Services**. The City may add to the Engineer services or delete therefrom activities of a similar nature to those set forth in ***Exhibit A***, provided that the total cost of such work does not exceed the total cost allowance as specified in Paragraph 5 hereof. The Engineer shall undertake such changed activities only upon the direction of the City. All such directives and changes shall be in written form and prepared and approved by the City and shall be accepted and countersigned by the Engineer.

3. **Term**. The services of the Engineer shall commence as soon as practicable after the execution of this contract, unless otherwise directed in writing, and shall be undertaken and completed in such sequence as to assure their expeditious completion in the light of the purposes of the contract, but in any event, all of the services required hereunder shall be completed as set forth in the schedule for the project which is attached hereto as ***Exhibit A***.

4. **Costs not to Exceed**. The City of Joplin is limited by law with respect to the amount of money it can pay. Therefore, the City has established a fixed sum for this contract, which cannot be exceeded unless this contract is amended. The Engineer providing services hereunder shall be required to keep track of the amount of hours billable under this contract at all times; and any work in excess of the fixed sum shall not be eligible for payment. The Engineer shall notify the City if Engineer anticipates that the contract amount may be exceeded, in order to determine whether or not the City is prepared to increase the total compensation. The Engineer shall establish a billing system showing the amount of money remaining on the contract, which shall be shown in each monthly billing.

5. **Payment**.

a. **Conditioned upon acceptable performance**. The City agrees to pay the Engineer in accordance with the terms set forth in ***Exhibit A***, which shall constitute complete compensation for all services to be rendered under this contract; provided, that where payments are to be made periodically to Engineer for services rendered under this contract, the City expressly reserves the right to disapprove in whole or in part a request for payment where the services rendered during the period for which payment is claimed are not performed in a timely and satisfactory manner in accordance with the schedule and description of services set forth in ***Exhibit A***.

b. **Total compensation not to exceed**. It is expressly understood that in no event will the total compensation and reimbursement to be paid to the Engineer under the terms of this work Authorization Number BMC-OC-18-001 exceed the sum of One Hundred Ninety-Four Thousand One Hundred Seventy Dollars ($194,170.00).

6. **Insurance**. Without limiting any of the other obligations or liabilities of the Engineer, the Engineer shall secure and maintain at its own cost and expense, throughout the duration of this Contract and until the work is completed and accepted by the

City of Joplin, insurance of such types and in such amounts as may be necessary to protect it and the interests of the City of Joplin against all hazards or risks of loss as hereunder specified or which may arise out of the performance of the Contract Documents. The form and limits of such insurance, together with the underwriter thereof in each case, are subject to approval by the City of Joplin. Regardless of such approval, it shall be the responsibility of the Engineer to maintain adequate insurance coverage at all times during the term of the Contract. Failure of the Engineer to maintain coverage shall not relieve it of any contractual responsibility or obligation or liability under the Contract Documents.

The certificates of insurance, including evidence of the required endorsements hereunder or the policies, shall be filed with the City at the time that this contract is signed by the Engineer. All insurance policies shall provide thirty (30) days written notice to be given by the insurance company in question prior to modification or cancellation of such insurance. Such notices shall be mailed, certified mail, return receipt requested, to:

City of Joplin - Public Works, 602 S. Main, Joplin, MO 64801; and

Such policies shall name the City as an additional insured with limits of liability not less than the sovereign immunity limits for Missouri public entities calculated by the Missouri Department of Insurance as of January 1 each calendar year and published annually in the Missouri Register pursuant to Section 537.610, RSMo.
(See, http://insurance.mo.gov/industry/sovimmunity.php).

As of January 1, 2018, the minimum coverage for the insurance referred to herein shall be as set out below:

a. Workers' Compensation....Statutory coverage per RSMo 287.010 et seq.
Employer's Liability..... $1,000,000.00

b. Commercial General Liability Insurance, including coverage for Contractual Liability and Independent Contractors Liability. Such coverage shall apply to bodily injury and property damage on an "Occurrence Form Basis" with limits of at least Two Million Eight Hundred Four Thousand Forty Six and no/100 Dollars ($2,804,046.00) for all claims arising out of a single accident or occurrence and at least Four Hundred Twenty Thousand Six Hundred Six and no/100 Dollars ($420,606.00) with respect to injuries and/or death of any one person in a single occurrence and an amount not less than at least $1,000,000 for all claims to property arising out of a single occurrence and at least $100,000 to any one owner with respect to damages to property. Engineer agrees that the proceeds of such insurance policy shall first be used to pay any award, damages, costs, and/or attorneys' fees incurred by or assessed against City, its employees, officers and agents, before payment of any award, damages, costs or attorneys fees of Engineer, its employees, officers or agents. Engineer agrees to cause its insurer to name City as an additional insured on such insurance policy, including the City as an additional insured for coverage under its products-completed operations hazard, and said policy shall be primary and noncontributory.

c. Automobile Liability Insurance covering bodily injury and property damage for owned, non-owned and hired vehicles, with limits of at least Two Million Eight Hundred Four Thousand Forty Six and no/100 Dollars ($2,804,046.00) for all claims arising out of a single accident or occurrence and at least Four Hundred Twenty Thousand Six Hundred Six and no/100 Dollars ($420,606.00) with respect to injuries and/or death of any one person in a single accident or occurrence.

d. Errors and Omissions Insurance. The Engineer shall maintain a professional liability insurance policy in the amount of $1,000,000.00. This policy shall remain in full force and effect for a period of one year after completion and acceptance by the City of the construction of the project.

e. Subcontracts. In case any or all of this work is sublet, the Engineer shall require the subcontractor to procure and maintain all insurance required in subparagraphs (A), (B) and (C) hereof and in like amounts. Engineer shall require any and all subcontractors with whom it enters into a contract to perform work on this project to protect the City of Joplin through insurance against applicable hazards or risks and shall, upon request of the City, provide evidence of such insurance.

f. Notice. The Engineer and/or subcontractor shall furnish the City prior to beginning the work satisfactory proof of carriage of all the insurance required by this contract, with the provision that policies shall not be canceled, modified or non-renewed without thirty (30) days written notice to the City of Joplin.

g. Legislative or Judicial Changes. In the event the scope or extent of the City's tort liability as a governmental entity as described in Section 537.600 through 537.650 RSMo is broadened or increased during the term of this agreement by legislative or

judicial action, the City may require Engineer, upon 10 days written notice, to execute a contract addendum whereby the Engineer agrees to provide, at a price not exceeding Engineer's actual increased premium cost, additional liability insurance coverage as the City may require to protect the City from increased tort liability exposure as the result of such legislative or judicial action. Any such additional insurance coverage shall be evidenced by an appropriate certificate of insurance and shall take effect within the time set forth in the addendum.

7. All other terms and conditions of the original Agreement shall remain in effect.

IN WITNESS WHEREOF, the parties hereto have set their hands and seals on the day and year herein stated.

REVIEWED FOR APPROVAL

Lynden Lawson Asst. Director of Public Works-Ops
Name & Title of Staff Project Manager

CERTIFICATE OF DIRECTOR OF FINANCE

I certify that the expenditure contemplated by this document is within the purpose of the appropriation to which it is to be charged and that there is an unencumbered balance of appropriated and available funds to pay therefore.

_____
Leslie Haase, Director of Finance

APPROVED AS TO FORM

_____
Peter Edwards, City Attorney

Engineer: Burns & McDonnell Engineering Company

By: _____

Printed Name: _____

Title: _____

Date: _____

CITY OF JOPLIN, MISSOURI

By: _____
David Hertberg, P.E.
Public Works Director

Date: _____

COUNCIL BILL NO. 2018-100 ORDINANCE NO.

AN ORDINANCE approving Work Authorization with Burns and McDonnell Engineering Inc. in the not to exceed amount of One Hundred Ninety Four Thousand, One Hundred Seventy and No/100 Dollars ($194,170.00) for engineering services associated with the Engineering Services Design, Bidding and Pre-construction Management for the Installation of a Parallel Force Main from Filmore Bridge Lift Station to the Gravity line on Apricot road; authorizing the City Manager to execute and containing an emergency clause.

BE IT ORDAINED BY THE COUNCIL OF THE CITY OF JOPLIN, MISSOURI as follows:

Section 1. That the Work Authorization by and between the City of Joplin and Burns and McDonnell Engineering Inc., in the not to exceed amount of One Hundred Ninety Four Thousand, One Hundred Seventy and No/100 Dollars ($194,170.00) for engineering design, bidding and pre construction services associated with Engineering Services for the Bidding and Pre-construction Management of the installation of a Parallel Force Main from Filmore Bridge lift Station to the gravity line located along Apricot road in the City of Joplin, Newton County, Missouri; a true and accurate copy of the same being attached hereto and incorporated by reference as "Exhibit A", be and the same is hereby approved.

Section 2. Upon the final approval and acceptance of the consultant's work under said contract, in substantial conformance with the attached exhibits, in writing by the Director of Public Works, and his certification to that effect to the Director of Finance, the consultant shall be paid from the Sanitary Sewer Fund

Section 3. That the City Manager or his designee is hereby authorized to execute said Work Authorization on behalf of the City of Joplin.

Section 4. This ordinance is an emergency within the means of Section 2.12 (6) in that said ordinance provides for public improvements and is considered an emergency by the Council and as such shall become effective immediately upon this passage as provided by the Home Rule Charter for the City of Joplin. Appropriations for this contract have been approved by the 2017-2018 budget from Sanitary Sewer Fund No. 415-4541-540-8015, Facility Improvements.

Passed by the Council of the City of Joplin, Missouri, this _____ day of

_____, 2018 by a _____ vote.

_____

ATTEST: Michael L. Seibert, Mayor

_____

Barbara L. Hogelin, City Clerk

APPROVED AS TO FORM:

_____

Peter C. Edwards, City Attorney

Council Bill 2018-101

I hereby certify that a sufficient amount is available in the Sanitary Sewer Fund Account Number 415-4541-540-8015 to pay the amounts called for on the basis of the work authorization received by the City Engineer.

_____

Leslie Haase, Director of Finance

City of JOPLIN **City Council Agenda Item**

Requested Council Meeting Date: January 2, 2018

Council Bill No. 2018-100

Item: Work Authorization with Burns & McDonnell Engineering Inc., for Engineering Services Associated with the Design, Bidding and Pre-construction Management for the Installation of a Parallel Force Main from Filmore Bridge Lift Station to the Gravity line along Apricot road.

Originating Department: Public Works – Operations

Attachments: 1) Work Authorization (BMC-OC-18-001)
2) Council Bill No. 2018-100
3) Location Map
4) Exhibit A

Department Head:	David Hertzberg
Finance Department:	Leslie Haase
City Attorney:	Peter C. Edwards
City Manager:	Samuel L. Anselm

Recommended Action: Approval of a Work Authorization with Burns & McDonnell Engineering Inc. in the not to exceed amount of $194,170.00 for engineering design, bidding and pre-construction management services associated with the installation of a Parallel Force Main from Filmore Bridge Lift Station to the gravity line along Apricot road.

Background: The Parallel Force Main line from Tin Cup Lift Station to Filmore Bridge Lift Station was built and put into service in 1988. This Force Main from Filmore Bridge to the Gravity line is approximately 3,950 feet long and carries between 3 -5 million gallons of sewage a day and transports in excess of 9 millions of gallons a day during a major rain event. The Tin Cup Lift Station feeds into this force main that travels a mile and a half to the gravity on Apricot road. The Filmore Bridge Lift Station is attached onto this Force Main as well.

Burns & McDonnell Engineering Inc. were selected using a RFQ to assess the Force Main Sewer line from Tin Cup Lift Station all the way to the gravity line along Apricot road. The work Authorization was BMC-OA-001 approved by Council December 5, 2016. Preliminary data obtained from their flow monitoring study was instrumental in providing further information for the amount of flow, sizing of the pumps for both of the lift stations and the necessity for a

parallel line to mitigate sanitary sewer overflows that are against the City of Joplin's NPDES permit.

Discussion: The firm of Burns & McDonnell Engineering Inc. has been selected to provide the professional engineering services needed to accomplish this installation of an additional Force Main sewer line for this project. The scope of work will include the preparation of design and bidding documents that will provide for the emplacement of the additional force main and will include pre-construction services needed for the installation of the force main. This work will be funded from the Sanitary Sewer Fund project that was approved in the FY 2017-2018 Budget.

Recommendation: City staff recommends approval of Work Authorization with Burns & McDonnell Engineering Inc. for the not to exceed amount of $194,170.00 for engineering services associated with Engineering Design, Bidding and Pre-construction Management Services for the installation of a parallel force main sewer line from Filmore Bridge Lift Station to the gravity line along Apricot road be approved on an emergency basis per Section 2.12 (6) of the Joplin City Charter.

City of Joplin City Council Agenda Item

REQUESTED COUNCIL MEETING DATE: January 2, 2018
ITEM: Council Bill No. 2018-015, enacting changes to Chapter 42, Courts, Article II, Municipal Court, Section 42-35, Court costs and other fees, by repealing Section 42-35 subsections (f) and (i).

ORIGINATING DEPARTMENT: Municipal Court
ATTACHMENTS: Council Bill No. 2018-015

DEPARTMENT HEAD: Lamonte Ratcliff
CITY ATTORNEY: Peter C. Edwards
CITY MANAGER: Samuel L. Anselm

INTRODUCTION:

This Council Bill enacts changes to Chapter 42, Courts, Article II, Municipal Court, Section 42-35, Court costs and other fees, by repealing Section 42-35 subsections (f) and (i), for the purpose of making the Joplin City Code consistent with Missouri state law.

DISCUSSION:

Section 42-35(f) of the Joplin City Code authorizes a warrant issuance fee of $25.00. Section 42-35(i) of the Joplin City Code authorizes a booking fee of $20.00. Recent changes to Missouri state law have made Section 42-35 inconsistent with state law. Specifically, the Municipal Court concurs with the opinion of the Office of State Courts Administrator that these types of fees are not authorized by any state statute or court rule. Section 42-35 subsections (f) and (i) should be repealed in order to make Section 42-35 consistent with state law.

Staff recommends this Council Bill be placed on First Reading.

JLP

COUNCIL BILL NO. 2018-015 ORDINANCE NO.

AN ORDINANCE amending Chapter 42, Courts, Article II, Municipal Court, Section 42-35, Court costs and other fees, by repealing Section 42-35 subsections (f) and (i).

BE IT ORDAINED BY THE COUNCIL OF THE CITY OF JOPLIN, MISSOURI, as follows:

WHEREAS, Section 42-35(f) of the Joplin City Code authorizes a warrant issuance fee of $25.00.

WHEREAS, Section 42-35(i) of the Joplin City Code authorizes a booking fee of $20.00.

WHEREAS, recent changes to Missouri state law have made Section 42-35 inconsistent with state law.

WHEREAS, Section 42-35 subsections (f) and (i) should be repealed in order to make Section 42-35 consistent with state law.

NOW, THEREFORE, BE IT ORDAINED BY THE COUNCIL OF THE CITY OF JOPLIN, MISSOURI, as follows:

Section 1. That Chapter 42, Courts, Article II, Municipal Court, Section 42-35 subsections (f) and (i), be repealed.

PASSED BY THE COUNCIL OF THE CITY OF JOPLIN, MISSOURI, this _____ day of _____, 2018, by a vote of _____.

_____
Michael L. Seibert, Mayor

ATTEST:

_____
Barbara J. Gollhofer, City Clerk

APPROVED AS TO FORM:

_____
Peter C. Edwards, City Attorney

Z&P Meeting: December 11, 2017
City Council Meeting: January 2, 2018

STAFF PLANNING REPORT
Final Plat

CASE 036-17 Final Plat review

NAME OF SUBDIVISION Kum & Go Addition

LOCATION: S. Main St. (MO HWY 83) & Glendale Rd

APPLICANT: Scott A. & Nancy L. Hutson

PRESENT ZONING: C-3, Commercial District

PRESENT LAND USE: Vacant land/parking lot

SITE CONTEXT:

	North	East	South	West
Existing Zoning	C-3	C-3	C-3	C-3
Land Use	Commercial	Commercial	Commercial	Commercial

SUBDIVISION:

Number of lots
1

TRANSPORTATION:

Streets with access	Classification	Right-of-way width
Glendale Blvd.	Collector	60’
South Main Street	Arterial	175’

WILL TURNING MOVEMENTS OF THE PROPOSED USE CREATE AN UNDUE TRAFFIC HAZARD?

No.

UTILITIES A new sewer extension will be added to service any new development.

FLOOD PLAIN N/A

STAFF ANALYSIS:

DOES THE PROPOSED SUBDIVISION COMPLY WITH THE CITY'S SUBDIVISION REGULATIONS?

Yes.

DISCUSSION

The final plat approval is for Kum & Go addition. This addition will be a single lot zoned commercial at the Southwest corner of South Main Street and Glendale Road. It is adjacent to the Hideout Harley-Davidson. The Final Plat does require City Council approval.

Staff recommends approval of Case 036-17, pending corrections made by City Surveyor.

ENCLOSURES:

Final Plat

BASIS OF BEARINGS:
ARKANSAS STATE PLANE GRID, NORTH ZONE, NAD 83.

0 30' 45' 60'
SCALE IN FEET

FINAL PLAT

Kum & Go Subdivision

A subdivision being part of the Southeast Quarter of Section 27,
Township 27 North, Range 33 West, City of Joplin, Newton County, Missouri

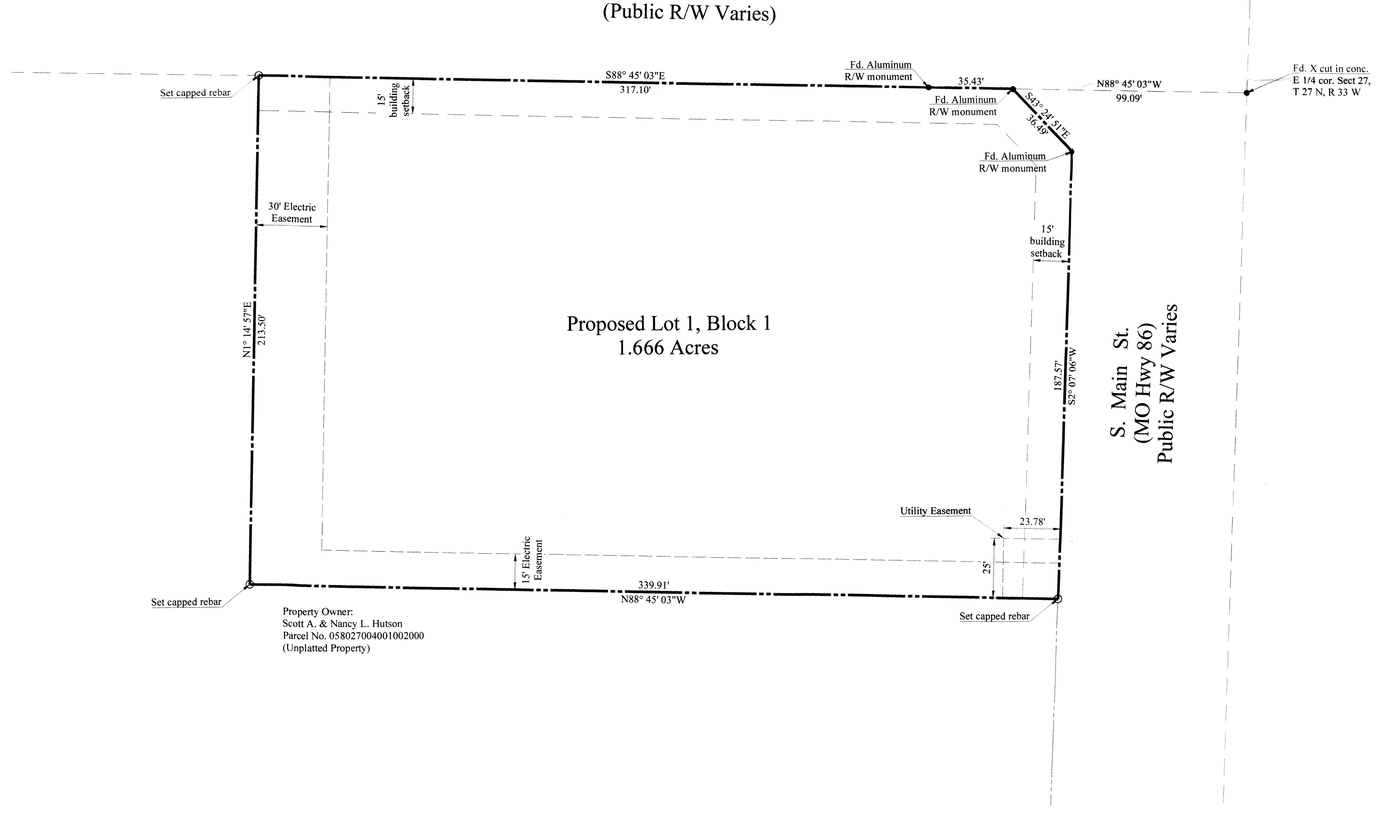

Part of the Southeast Quarter Section 27, Township 27 North, Range 33 West of the 5th P.M., City of Joplin, Newton County, Missouri further described as follows:

Commencing at the Northeast corner of said Southeast Quarter; thence North 88°45'03" West, 99.09 feet along the North line of said Southeast Quarter to a point on the West right of way of South Main Street (Missouri Hwy 86) said point also being the point of beginning; thence South 43°24'51" East, 36.49 feet along said West right of way; thence South 2°07'06" West, 187.57 feet along said West right of way; thence leaving said West right of way North 88°45'03" West, 339.91 feet; thence North 1°14'57" East, 213.50 feet to a point on the North line of said Southeast Quarter; thence South 88°45'03" East, 317.10 feet along said North line to the point of beginning.

Contains 72,578 square feet or 1.666 acres of land, more or less.

CERTIFICATE OF OWNER:
We, the undersigned, owners of the real estate shown and described herein do hereby, plat and subdivide said real estate in accordance with the attached plat and do hereby dedicate all streets, easements and alleys to the City of Joplin, MO.

Scott A. Hutson _____ Date _____ Nancy L. Hutson _____ Date _____

State of Missouri }
} SS
County of Newton }

Be it remembered that on this _____ day of _____, 2018, before me, a notary public in and for said County and State, came Scott A. Hutson and Nancy L. Hutson to me personally known to be the same persons who executed the foregoing instrument of writing and duly acknowledged the execution of the same. In testimony whereof, I have hereunto set my hand and affixed my notarial seal the day and year above written.

_____ My Commission Expries:_____
Notary Public

CERTIFICATE OF THE PLANNING AND ZONING COMMISSION:

This plat of KUM & GO SUBDIVISION has been submitted to and approved by the Joplin Planning and Zoning Commission on this _____ day of _____, 2018.

_____
Chairman

CERTIFICATE OF THE JOPLIN CITY COUNCIL:

This plat of KUM & GO SUBDIVISION, including easements and rights of way accepted by the City Council has been submitted to and approved by the Joplin City Council by Ordinance No. _____, duly passed and approved by the Mayor on the _____day of _____, 2018.

_____
Mayor

ATTEST:

_____
City Clerk

_____
City Clerk

CERTIFICATE OF RECORDING:

STATE OF MISSOURI }
COUNTY OF NEWTON }

I, _____, Recorded of Deeds of said County, do hereby certify that the within instrument of writing was, on the _____ day of _____, 2018, at _____o'clock and _____ minutes, _____ M. duly filed for record in this office, and is recorded in the records of this office in Plat Book _____, at Page _____.

In witness whereof, I have hereunto set my hand and seal this _____day of _____, 2018.

_____
Recorder of Deeds

CERTIFICATE OF SURVEYING ACCURACY:

I do hereby certify that this plat correctly represents a survey made by me or under my direct supervision and in accordance with the current Missouri Minimum Standards for Property Boundary Surveys; that all monuments shown hereon actually exist or will be placed within 12 months after this plat is recorded, and their location, size, type, and material are correctly shown.

_____ Date _____
Richard L. Dayton
Professional Land Surveyor No. 2413

STATE OF MISSOURI
RICHARD L. DAYTON
NUMBER PLS-2413
PROFESSIONAL LAND SURVEYOR

NOTES:
1. Water service shall be by City of Joplin.
2. Sewer service shall be by City of Joplin.
3. Existing Zoning: C-3 Commercial District
4. Proposed Use: Convenience Store/Gas Station

FIRM NOTE:
By graphic scaling only this property is located within Flood Zone "X" as determined from the National Flood Insurance Program, Flood Insurance Rate Map, Map No. 29149C0017E, Effective Date: November 26, 2010.

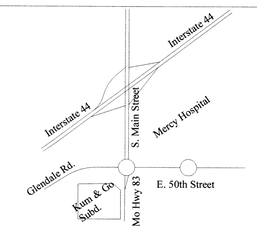

VICINITY MAP
Not to Scale

Zark
Civil Engineering Inc.
3214 N.W. AVIGNON WAY, SUITE 4
BENTONVILLE, AR 72712
479.464.8850 | OFFICE 479.464.9040 | FAX

DATE OF FIELD SURVEY - September 19, 2017	
SCALE: 1"=30'	
DRAWN BY: RD	DATE: November 17, 2017
FIELD CREW: ICS	DRAWING NO. S170430
CHECKED BY: RLD	SHEET 1 OF 1

Case 036-17

City of **JOPLIN** City Council Agenda Item

Requested Council Meeting Date: January 2, 2018

Item: COUNCIL BILL NO. 2018-250
Originating Department: PLANNING & COMMUNITY DEVELOPMENT

Attachments: 1) Copy of Council Bill 2018-250
2) Planning Report
3) Commission Minutes

Planning/Community Development Manager: Troy Bolander
City Attorney: Peter C. Edwards
City Manager: Samuel L. Anselm
Board or Commission: Planning and Zoning Commission Date: 12/11/17

Recommended Action: Planning and Zoning Commission recommended approval by a vote of 7 In Favor.

SUMMARY/REQUEST:

Case 036-17: Southwest Corner of Glendale Avenue and Main Street – A request to review the final plat for 'Kum and Go Subdivision' – Ozark Civil Engineering, Inc.

STAFF SUMMARY:

The final plat approval is for Kum & Go addition. This addition will be a single lot zoned commercial at the Southwest corner of South Main Street and Glendale Road. It is adjacent to the Hideout Harley-Davidson. The Final Plat does require City Council approval.

Staff recommends approval of Case 036-17, pending corrections made by City Surveyor.

PLANNING & ZONING COMMISSION TESTIMONY:

Mike Clotfelter, Ozark Civil Engineering, Inc., 3214 NW Aveon Way, Bentonville, AR.

Mr. Duncan asked if there were any changes from the preliminary to the final plat?

Mr. Clotfelter stated there was not.

PUBLIC COMMENT:
None.

Case 036-17: Southwest Corner of Glendale Avenue and Main Street-A request to Review the Final Plat of Kum and Go Subdivision -Ozark Civil Engineering, Inc.

Mr. Duncan asked if there was anyone who would like to speak in favor of this case.

Mike Clotfelter, Ozark Civil Engineering, Inc., 3214 NW Aveon Way, Bentonville, AR.

Mr. Duncan asked if there were any changes from the preliminary to the final plat?

Mr. Clotfelter stated there was not.

Mr. Bolander stated that staff has reviewed this plat and there are some formatting changes. The design, the square footage, and the legal description is correct. Missouri has made changes at the State level that should be on the final plat. Being from Arkansas they would not have known that and the corrections will not stop your approval of this plat if you so choose too.

Anyone else like to speak in favor of this case. There were none.

Anyone here to speak in opposition of this case. There were none.

Mr. Duncan Closed the Public Hearing.

MRS. BRUECKNER-SEARS MOVED, SECONDED BY MRS. KOELKEBECK, THAT CASE 036-17 BE FORWARD TO CITY COUNCIL WITH RECOMMENDATION FOR APPROVAL. THE MOTION CARRIED, WITH MR. DUNCAN, MR. CORTEZ, MR. RAMSOUR, MS. BRUECKNER-SEARS MR. DERMOTT, MS. KOELKEBECK, AND MS. STEELE VOTING "AYE". (7 IN FAVOR, 0 NAYS).

P & Z Case 036-17
Ozark Civil Engineering, Inc.
(P & Z Recommended Approval)

COUNCIL BILL NO. 2018-250 ORDINANCE NO.

AN ORDINANCE establishing grades and accepting the Plat of KUM AND GO Addition located Southwest Corner of Glendale Avenue and Main Street, in the City of Joplin, Newton County, Missouri.

BE IT ORDAINED BY THE COUNCIL OF THE CITY OF JOPLIN, MISSOURI, as follows:

Section 1. That the grades in the Plat of KUM AND GO Addition located on the Southwest Corner of Glendale Avenue and Main Street in the City of Joplin, Newton County, Missouri be and the same are hereby fixed and established as follows:

PART OF THE SOUTHEAST QUARTER SECTION 27, TOWHSIP 27 NORTH, RANGE 33 WEST OF THE 5TH P.M., CITY OF JOPLIN, NEWTON COUNTY, MISSOURI FURTHER DESCRIBED AS FOLLOWS:
COMMENCING AT THE NORTHEAST CORNER OF SAID SOUTHEAST QUARTER; THENCE NORTH 88 DEGREE 45 MINUTES 03 SECONDS WEST, 99.09 FEET ALONG THE NORTH LINE OF SAID SOUTHEAST QUARTER TO A POINT ON THE WEST RIGHT OF WAY OF SOUTH MAIN STREET (MISSOURI HWY 86) SAID POINT ALSO BEING THE POINT OF BEGINNING; THENCE SOUTH 43 DEGREE 24 MINUTES, 51 SECONDS EAST, 36.49 FEET ALONG SAID WEST RIGHT OF WAY; THENCE SOUTH 2 DEGREE 07 MINUTES 06 SECONDS WEST, 187.57 FEET ALONG SAID WEST RIGHT OF WAY; THENCE LEAVING SAID WEST RIGHT OF WAY NORTH 88 DEGREES 45 MINUTES 3 SECONDS WEST, 339.91 FEET; THENCE NORTH 1 DEGREE 14 MINUTES 57 SECONDS EAST, 213.50 FEET TO A POINT ON THE NORTH LINE OF SAID SOUTHEAST QUARTER; THENCE SOUTH 88 DEGREE 45 MINUTES 03 SECONDS EAST, 317.10 FEET ALONG SAID NORTH LINE TO THE POINT OF BEGINNING. CONTAINS 72,578 SQUARE FEET OR 1.666 ACRES OF LAND, MORE OR LESS.

Section 2. That said plat, having been filed showing that the lots have been staked out and platted and the streets and alleys have been dedicated to the public for public use, and that the proper levels have been run and the grades established for said addition, is hereby accepted by the City of Joplin, Newton County, Missouri, and according to the statues of the State of Missouri.

Section 3. That the City Clerk is hereby authorized and directed to endorse upon such plat the approval of the Council under her hand and the Seal of the City of Joplin, Missouri.

PASSED BY THE COUNCIL OF THE CITY OF JOPLIN, MISSOURI, this _____ day of _____, 2018, by a vote of _____.

_____
Michael L. Seibert, Mayor

ATTEST:

_____

Barbara Golhofer, City Clerk

APPROVED AS TO FORM:

_____

Peter C. Edwards, City Attorney

Z&P Meeting: December 11, 2017
City Council Meeting: January 2nd, 2017

STAFF PLANNING REPORT
Site Plan Review

CASE 037-17 A request to review a site plan for a fast food restaurant

NAME OF PROJECT Dairy Queen

LOCATION 2015 E. 32nd St. (vacant lot located west of 2023 E. 32nd St.)

APPLICANT Reyling Design & Consulting

CORRIDOR 32nd St.

EXISTING CONDITIONS

Zoning	Land Use	Property Size
C-3-PD Planned Commercial Development	Undeveloped	36,000 sq. ft.

SITE CONTEXT

	North	East	South	West
Existing Zoning	C-3-PD	C-1-PD	C-1-PD	C-2-PD
Land Use	Offices	Bank	Retail & Offices	Retail Center

TRANSPORTATION

Streets with access	Classification	Right-of-way width
32nd St.	Arterial	85’

WILL TURNING MOVEMENTS OF THE PROPOSED USE CREATE AN UNDUE TRAFFIC HAZARD?

No. Ingress/Egress will come from a private driveway.

UTILITIES Sanitary sewer is located along 32nd St. Other utilities are located nearby.

FLOOD PLAIN This property is not located within the flood plain.

DISCUSSION

This Site Plan Review is for the construction of a new fast food restaurant. The proposed restaurant footprint is approximately 2,600 sq. ft. and will contains 70 seats. The site plan contains adequate off-street parking and the proposed landscaping plans meets the requirements of our code.

ENCLOSURES

Application
Site Plan
Landscaping Plan
Building Elevations

Staff recommends approval of Case 037-17.

GENERAL SITE NOTES:

ALL CONSTRUCTION SHALL BE PERFORMED IN ACCORDANCE WITH THE LATEST CITY OF JOPLIN AND THE MISSOURI DEPARTMENT OF TRANSPORTATION CODES, STANDARDS AND SPECIFICATIONS.

ANY CITY OF JOPLIN INFRASTRUCTURE (ABOVE OR BELOW GRADE, VISIBLE OR NOT) OR PROPERTY DAMAGED AS A RESULT OF CONSTRUCTION SHALL BE REPAIRED BY THE CONTRACTOR TO THE SATISFACTION OF THE CITY.

ALL CONSTRUCTION SHALL CONFORM TO THE APPLICABLE LOCAL, STATE, AND FEDERAL CODE REQUIREMENTS. WHEN CODES ARE IN CONFLICT, THE MORE STRINGENT SHALL APPLY.

ALL SIGNAGE AND PAVEMENT MARKINGS SHALL COMPLY WITH THE LATEST EDITION OF THE MANUAL ON UNIFORM TRAFFIC CONTROL DEVICES (MUTCD), OR AS OTHERWISE SPECIFIED. INSTALLATION OF ALL SIGNS SHALL BE GOVERNED BY LOCAL CODES.

THE CONTRACTOR IS RESPONSIBLE TO HAVE ALL EXISTING UTILITIES LOCATED AND PROTECTED DURING CONSTRUCTION. THE CONTRACTOR SHALL NOTIFY THE UTILITY PROTECTION CENTER AT LEAST THREE (3) DAYS PRIOR TO ANY SITE WORK FOR IDENTIFICATION OF EXISTING UTILITIES.

THE CONTRACTOR SHALL VERIFY ALL DIMENSIONS AT THE PROJECT SITE BEFORE BEGINNING CONSTRUCTION.

CIVIL SITE KEY NOTES:

1. PROPOSED 6" PCC BARRIER CURB, SEE DETAIL.
2. PROPOSED ACCESSIBLE PARKING STALL STRIPING AND SIGNAGE. SEE DETAIL.
3. EXISTING ROADWAY AND CURB TO REMAIN – PROTECT IN PLACE.
4. PROPOSED PIPE BOLLARD, SEE DETAIL.
5. PROPOSED 4" WIDE PARKING STALL STRIPING AND WHITE PAVEMENT MARKING, TRAFFIC WHITE PAINT PER DETAIL. SEE PLAN FOR TYPICAL DIMENSIONS.
6. PROPOSED PEDESTRIAN ACCESS, CONTRASTING PAVEMENT PER ADA STANDARDS.
7. PROPOSED TRASH RECEPTACLE.
8. CONTRACTOR TO SAWCUT EXISTING PAVEMENT TO MAKE SMOOTH TRANSITION TO NEW PARKING LOT PAVEMENT.
9. PROPOSED PCC CURB TAPER TO MATCH PAVEMENT AND/OR SIDEWALK GRADE.
10. PROPOSED DETECTABLE WARNING (TRUNCATED DOMES) TO MEET ADA STANDARDS, SEE DETAIL. PROPOSED FLUSH PCC SIDEWALK TO PAVEMENT.
11. PROPOSED TRASH/RECYCLNG ENCLOSURE WITH PIPE BOLLARDS. SEE ARCHITECTURAL AND STRUCTURAL PLANS FOR DETAILS.
12. PROPOSED OUTDOOR CONCRETE PATIO AREA.
13. PROPOSED PARKING LOT LIGHTING. SEE SITE LIGHTING PLAN FOR DETAILS.
14. PROPOSED CONCRETE SIDEWALK, CONTRACTOR SHALL CONSTRUCT TO MEET CURRENT ADA STANDARDS.
15. PROPOSED CONCRETE PARKING BLOCK, SEE DETAIL.
16. PROPOSED PATIO HANDRAIL, SEE ARCHITECTURAL PLANS FOR DETAILS.
17. PROPOSED PYLON SIGN, SEE ARCHITECTURAL PLANS FOR DETAILS.
18. PROPOSED DRIVE THRU ENTRANCE SIGN, SEE ARCHITECTURAL PLANS FOR DETAILS.
19. PROPOSED CLEARANCE BAR AND SIGN, SEE ARCHITECTURAL PLANS FOR DETAILS.
20. PROPOSED PREVIEW BOARD, SEE ARCHITECTURAL PLANS FOR DETAILS.
21. PROPOSED SPEAKER AND LOOP INDICATOR SYSTEM, SEE ARCHITECTURAL PLANS FOR DETAILS.
22. PROPOSED DRIVE THRU MENU BOARD, SEE ARCHITECTURAL PLANS FOR DETAILS.
23. PROPOSED LANDSCAPING, SEE LANDSCAPE PLAN FOR DETAILS.
24. PROPOSED LARGE ORDER PARKING AND TRUCK LOADING AND UNLOADING AREA.
25. PROPOSED PATIO LIGHTING. SEE SITE LIGHTING PLAN FOR DETAILS.
26. PROPOSED EXIT AND DO NOT ENTER SIGN, SEE ARCHITECTURAL PLANS FOR DETAILS.

SITE PAVING LEGEND:

- PROPOSED PCC CONCRETE SIDEWALK (6"PCC/4" AB), SEE DETAIL
- PROPOSED PCC CONCRETE PAVEMENT (6"PCC/4" AB), SEE DETAIL
- PARKING LOT-PROPOSED ASPHALT (5" AC/6" AB), SEE DETAIL
- PROPOSED LANDSCAPE AND GRASS AREA, SEE LANDSCAPE PLAN
- PROPOSED DETECTABLE WARNING SURFACE, SEE DETAIL

HORIZ. SCALE: 1" = 20'

0 10 20 40

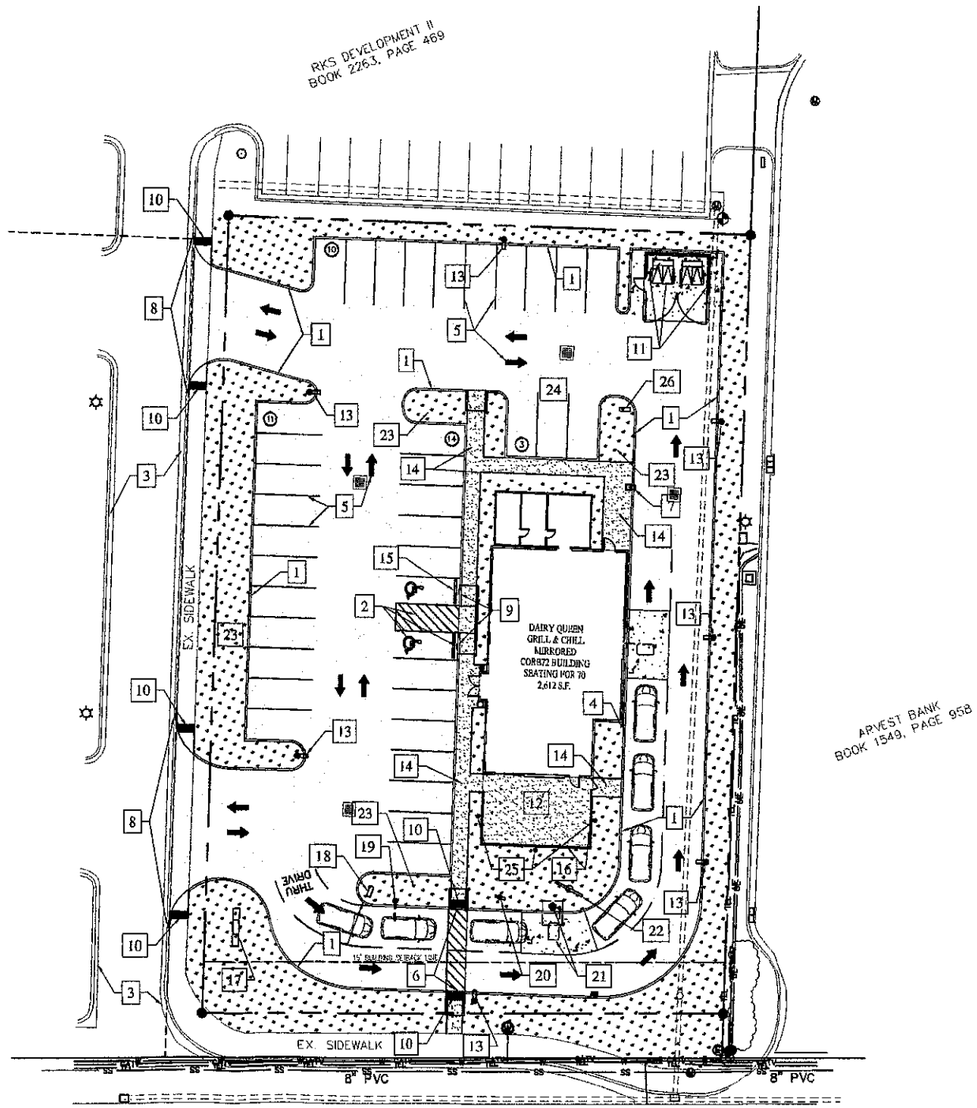

Architect:
JSO
JOHN S. ODOM, ARCHITECT
93 MEADOWBROOK COUNTRY CLUB ESTATES
BALLWIN, MISSOURI 63011
PH. 1.417.343.2902
WWW.JOHNSODOM.COM
E-MAIL: JOHN@JOHNSODOM.COM

Civil Engineer:
RDC
REYLING DESIGN & CONSULTING
4516 Boardwalk | Smithton, IL | 62285
reylingdc@gmail.com

Missouri Firm License: 2018012869
MO Certificate of Authority: LC001485066

STATE OF MISSOURI
TODD JEFFREY REYLING
NUMBER PE-2011020072
PROFESSIONAL ENGINEER

LICENSE EXPIRES - 12.31.2017
DATE SIGNED - 10.31.2017

ENGINEER OF RECORD:
Todd J. Reyling, PE
Missouri PE 2011020072

ISSUED / REVISED	DATE
ISSUED TO CITY	10.31.2017

PROJECT NUMBER: 17-158

New Ground Up Building:
DAIRY QUEEN

2015 E 32nd Street
Joplin, Missouri 64804
Jasper County

Civil Site Plan

C200

GENERAL SITE NOTES:

ALL CONSTRUCTION SHALL BE PERFORMED IN ACCORDANCE WITH THE LATEST CITY OF JOPLIN AND THE MISSOURI DEPARTMENT OF TRANSPORTATION CODES, STANDARDS AND SPECIFICATIONS.

ANY CITY OF JOPLIN INFRASTRUCTURE (ABOVE OR BELOW GRADE, VISIBLE OR NOT) OR PROPERTY DAMAGED AS A RESULT OF CONSTRUCTION SHALL BE REPAIRED BY THE CONTRACTOR TO THE SATISFACTION OF THE CITY.

ALL CONSTRUCTION SHALL CONFORM TO THE APPLICABLE LOCAL, STATE, AND FEDERAL CODE REQUIREMENTS. WHEN CODES ARE IN CONFLICT, THE MORE STRINGENT SHALL APPLY.

ALL SIGNAGE AND PAVEMENT MARKINGS SHALL COMPLY WITH THE LATEST EDITION OF THE MANUAL ON UNIFORM TRAFFIC CONTROL DEVICES (MUTCD), OR AS OTHERWISE SPECIFIED. INSTALLATION OF ALL SIGNS SHALL BE GOVERNED BY LOCAL CODES.

THE CONTRACTOR IS RESPONSIBLE TO HAVE ALL EXISTING UTILITIES LOCATED AND PROTECTED DURING CONSTRUCTION. THE CONTRACTOR SHALL NOTIFY THE UTILITY PROTECTION CENTER AT LEAST THREE (3) DAYS PRIOR TO ANY SITE WORK FOR IDENTIFICATION OF EXISTING UTILITIES.

THE CONTRACTOR SHALL VERIFY ALL DIMENSIONS AT THE PROJECT SITE BEFORE BEGINNING CONSTRUCTION.

HORIZONTAL CONTROL NOTES

CONTRACTOR SHALL VERIFY ALL DIMENSIONS AT PROJECT SITE PRIOR TO BEGINNING CONSTRUCTION AND NOTIFY THE ENGINEER OF DISCREPANCIES.

ALL DIMENSIONS ARE TO FACE OF CURB/EDGE OF PAVEMENT UNLESS OTHERWISE NOTED.

ALL PARKING LOT CURB RADII ARE DIMENSIONED TO THE BACK OF CURB.

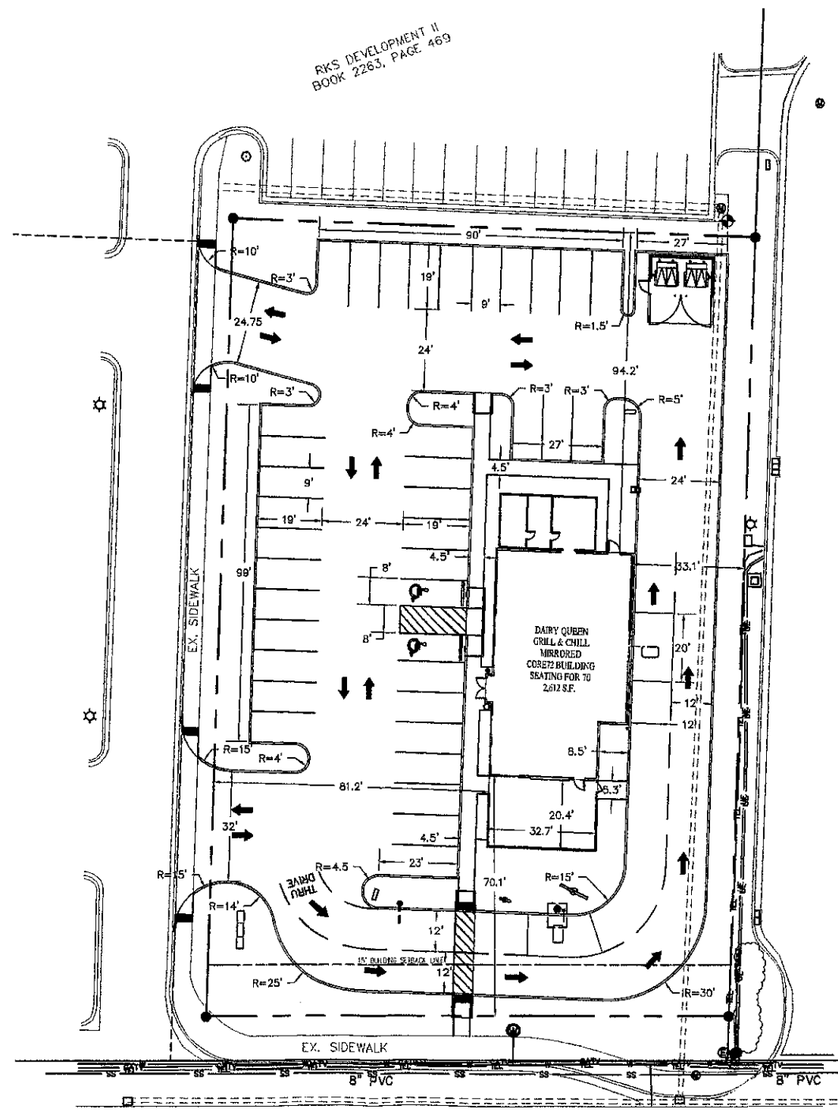

HORIZ. SCALE: 1" = 20'

0 10 20 40

Architect:

JSO

JOHN S. ODOM, ARCHITECT
99 MEADOWBROOK COUNTRY CLUB ESTATES
BALLWIN, MISSOURI 63011
PH. (417)343-2602
WWW.JOHNSODOM.COM
E-MAIL: JOHN@JOHNSODOM.COM

Civil Engineer:

REYLING DESIGN & CONSULTING

4516 Boardwalk | Smithton, IL | 62285
reylingdc@gmail.com

Missouri Firm License: 2016012669
MO Certificate of Authority: LC001485056

STATE OF MISSOURI
TODD JEFFREY REYLING
NUMBER PE-2011020072
PROFESSIONAL ENGINEER

LICENSE EXPIRES - 12.31.2017
DATE SIGNED - 10.31.2017

ENGINEER OF RECORD:
Todd J. Reyling, PE
Missouri PE 2011020072

ISSUED / REVISED	DATE
ISSUED TO CITY	10.31.2017

PROJECT NUMBER: 17-158

New Ground Up Building:
DAIRY QUEEN

2015 E 32nd Street
Joplin, Missouri 64804
Jasper County

Civil Site Plan
Horizontal
Control

C201

GENERAL PLANTING NOTES

1. PRIOR TO BEGINNING ANY WORK ON THE SITE, THE CONTRACTOR SHALL CONTACT THE OFFICE OF THE OWNER AND THE ARCHITECT/LANDSCAPE ARCHITECT FOR SPECIFIC INSTRUCTIONS RELEVANT TO THE SEQUENCING OF WORK.

2. LANDSCAPE CONTRACTOR SHALL PROVIDE ALL LABOR, MATERIALS AND SERVICE NECESSARY TO FURNISH AND INSTALL PLANTINGS AS SPECIFIED HEREIN AND AS SHOWN ON THESE PLANS.

3. NO MATERIAL SUBSTITUTIONS SHALL BE MADE WITHOUT THE OWNER'S APPROVAL. ALTERNATE MATERIALS OF SIMILAR SIZE AND CHARACTER MAY BE CONSIDERED IF SPECIFIED PLANT MATERIALS CANNOT BE OBTAINED. LANDSCAPE ARCHITECT RESERVES THE RIGHT TO REVISE PLANT LIST AS DEEMED NECESSARY.

4. ALL PLANT LOCATIONS ARE APPROXIMATE, ADJUST AS NECESSARY TO AVOID CONFLICTS.

5. QUANTITIES OF MATERIALS SHOWN ON THE PLANTING PLAN TAKE PRECEDENCE OVER QUANTITIES SHOWN ON THE PLANT MATERIAL SCHEDULE. LANDSCAPE CONTRACTOR SHALL BE RESPONSIBLE FOR VERIFYING ALL QUANTITIES ON THE PLANTING PLAN.

6. CONTRACTOR SHALL LOCATE ALL UTILITIES BEFORE WORK. LOCATE EXACT UTILITY LOCATIONS BY CONTACTING THE LOCAL UTILITY LOCATOR SERVICE. THE CONTRACTOR WILL BE RESPONSIBLE FOR THE REPAIR OF ANY DAMAGE HE MAY CAUSE TO UTILITIES.

7. GENERAL CONTRACTOR SHALL PROVIDE 4" OF TOPSOIL AT ALL SOD AND PLANTING AREAS. GRADE SHALL BE ADJUSTED FOR SOD THICKNESS. ALL FINISH GRADING SHALL BE PERFORMED BY THE LANDSCAPE CONTRACTOR.

8. SOD TYPE SHALL BE LOCALLY AVAILABLE TALL FESCUE BLEND OR OTHER TURF GRASS RECOMMEDED FOR THE SPECIFIC AREA.

9. BACKFILL FOR PLANT EXCAVATIONS TO BE CLEAN NATURAL SOIL, EXCAVATED FROM PLANTING PITS MIXED WITH COMPOST AND WELL-ROTTED MANURE AT A RATIO OF THREE (3) PARTS SOIL TO ONE (1) PART COMPOST AND WELL-ROTTED MANURE.

10. FERTILIZE ALL PLANTS WITH 6-10-4 COMMERCIAL FERTILIZER AS DIRECTED BY INSTRUCTIONS ON FERTILIZER.

11. AFTER PLANTING IS COMPLETED, REPAIR INJURIES TO ALL PLANTS AS REQUIRED. LIMIT AMOUNT OF PRUNING TO A MINIMUM NECESSARY TO REMOVE DEAD OR INJURED TWIGS AND BRANCHES. PRUNE IN SUCH A MANNER AS NOT TO CHANGE NATURAL HABIT OR SHAPE OF PLANT. MAKE CUTS FLUSH, LEAVING NO STUBS.

12. ALL LANDSCAPE EDGING IS TO BE A 4" X 3/16" PAINTED STEEL EDGING. PLACE EDGING FLUSH WITH GRADE.

13. INSTALL SHREDDED HARDWOOD MULCH IN ALL PLANT BEDS AND TREE SAUCERS. PLACE 3"-4" OF MULCH IN ALL PLANT BEDS AND TREE SAUCERS.

14. PLANTING BEDS RECEIVING MULCH ARE TO BE FREE OF WEEDS AND GRASS. TREAT BEDS WITH A PRE-EMERGENT HERBICIDE PRIOR TO MULCH PLACEMENT. APPLY IN ACCORDANCE WITH STANDARD TRADE PRACTICE.

15. THE CONTRACTOR SHALL PROVIDE ALL WATER, WATERING DEVICES AND LABOR NEEDED TO IRRIGATE PLANT MATERIALS UNTIL ACCEPTANCE OF THE PROJECT'S PLANT MATERIALS. THE CONTRACTOR SHALL SUPPLY ENOUGH WATER TO MAINTAIN THE PLANT'S HEALTHY CONDITION.

16. RE-ESTABLISH TURF IN AREAS DISTURBED BY GRADING OR UTILITY TRENCHING IN THE R.O.W.

17. REESTABLISH TURF IN ALL AREAS DISTURBED BY THE CONSTRUCTION PROCESS AND WITHIN THE LIMITS OF DISTURBANCE BY SEED, SOD OR PLANNED PLANTING AREAS, AS NOTED ON PLAN.

18. REPORT ANY DISCREPANCIES IN THE PLANTING PLAN TO THE OWNER'S REPRESENTATIVE PRIOR TO STARTING CONSTRUCTION.

19. TURF AND PLANTING BEDS ARE TO BE IRRIGATED BY AN AUTOMATIC SPRINKLER SYSTEM. SEE SHEET LS-2.

LEGEND

SOD/TURF

CONCRETE

UTILITIES SHOWN REPRESENT THE BEST INFORMATION AVAILABLE FOR DESIGN. ADDITIONAL UTILITIES MAY BE PRESENT ON THIS PROJECT. THE CONTRACTOR SHALL BE RESPONSIBLE FOR DETERMINING THE EXACT LOCATION, DEPTH AND SIZE OF ALL UNDERGROUND UTILITIES PRIOR TO CONSTRUCTION. THE CONTRACTOR SHALL BE LIABLE FOR ANY DAMAGE CAUSED BY THE FAILURE TO DO SO.

LANDSCAPE CODE CALCULATIONS

PARKING LOT LANDSCAPING REQUIREMENTS

Parking Lot Trees Required
38 Total stalls / 20 spaces = 1.9 or say 2 trees required

2 trees provided

Parking Lot Screening Required
155 LF / 50 = 3.1 or say 3 trees required

3 trees provided

PLANT SCHEDULE

TAG	QTY.	COMMON NAME	BOTANICAL NAME	SIZE	COND.	REMARKS
		SHADE TREES				
OCM	3	OCTOBER GLORY MAPLE	ACER RUBRUM 'OCTOBER GLORY'	2" CAL.	B & B	
SMH	2	SHADEMASTER HONEYLOCUST	GLEDITSIA TRIACANTHOS VAR. INERMIS 'SHADEMASTER'	2" CAL.	B & B	
		ORNAMENTAL TREE				
SSC	1	SPRING SNOW CRABAPPLE	MALUS X SPRING SNOW	2" CAL.	B & B	
		DECIDUOUS SHRUBS				
GMS	6	GOLDMOUND SPIREA	SPIREA X BUMALDI 'GOLDMOUND'	3 GAL	CONT.	
PCM	3	PECOS CRAPE MYRTLE	LAGERSTROEMIA INDICA 'PECOS'	5 GAL	CONT.	
RDR	8	RED DRIFT ROSE	ROSA MEIGALPIO	3 GAL	CONT.	
		EVERGREEN SHRUBS				
GCJ	24	GOLDCOAST JUNIPER	JUNIPERUS X PFITZERIANA 'GOLD COAST'	3 GAL	CONT.	
WGB	39	WINTERGREEN BOXWOOD	BUXUS MICROPHYLLA VAR. 'WINTERGREEN'	3 GAL	CONT.	
FPN	20	FIREPOWER NANDINA	NANDINA DOMESTICA 'FIREPOWER'	3 GAL	CONT.	
		ORNAMENTAL/NATIVE GRASSES				
AMG	3	ADAGIO MAIDEN GRASS	MISCANTHUS SINENSIS 'ADAGIO'	2 GAL	CONT.	
BAG	38	BLONDE AMBITION GRAMA GRASS	BOUTELOUA GRACILIS 'BLONDE AMBITION'	1-2 GAL	CONT.	
		PERENNIALS				
BBL	37	BIG BLUE LIRIOPE	LIRIOPE MUSCARI 'BIG BLUE'	4" - 1 GAL	CONT.	

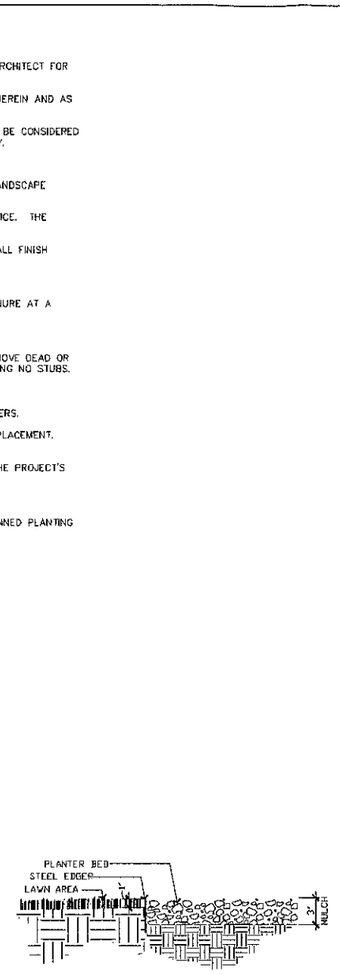

1 EDGER DETAIL — NO SCALE

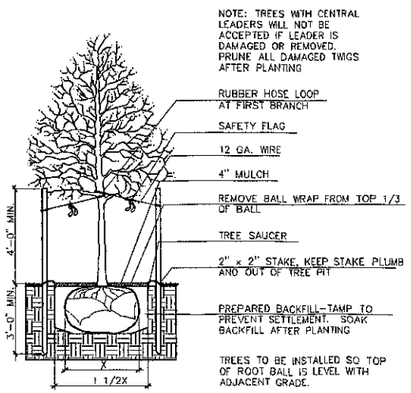

2 TREE PLANTING DETAIL — IN TURF AREAS — NO SCALE

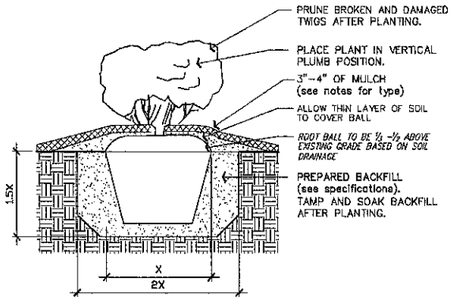

3 SHRUB PLANTING DETAIL — NO SCALE

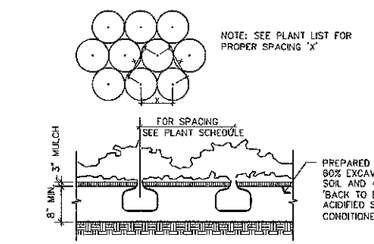

4 GROUND COVER DETAIL — NO SCALE

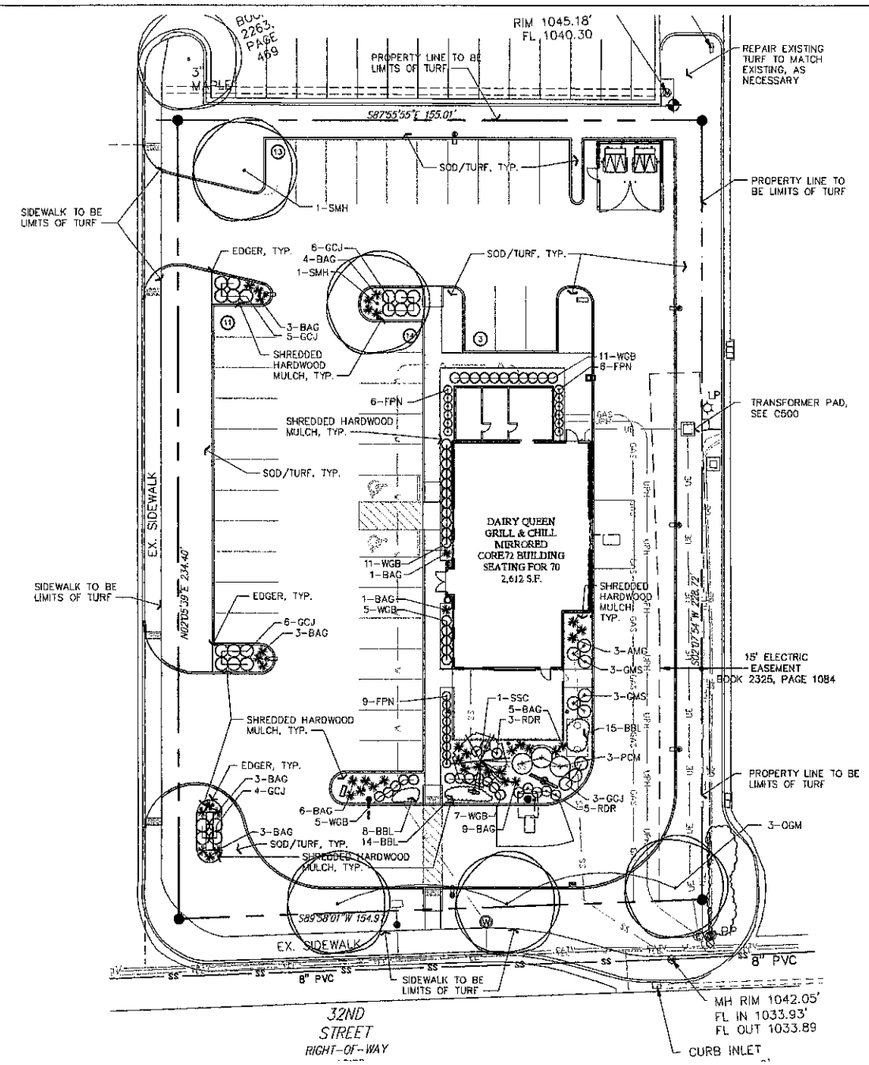

PLANTING PLAN

1" = 20'-0"

North

Issued/Revised	Date

New Ground Up Building:
DAIRY QUEEN
2015 E. 32nd Street
Joplin, Missouri

STATE OF MISSOURI
TERI ANDREAS FARHA
NUMBER PLA-2007001663
1-03-17
REGISTERED LANDSCAPE ARCHITECT

TERI FARHA, PLA
LANDSCAPE ARCHITECT
Wichita, KS 67218
PH. 620-262-7268

PLANTING PLAN

DATE
November 3, 2017

LS1

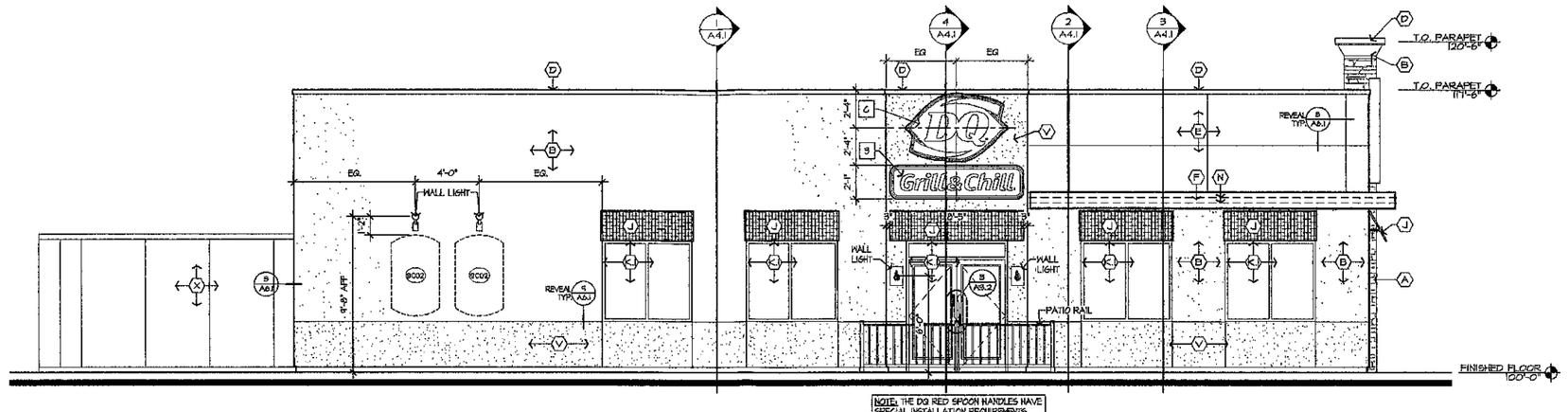

1 A3.1 ENTRANCE ELEVATION

SCALE: 1/4" = 1'-0"

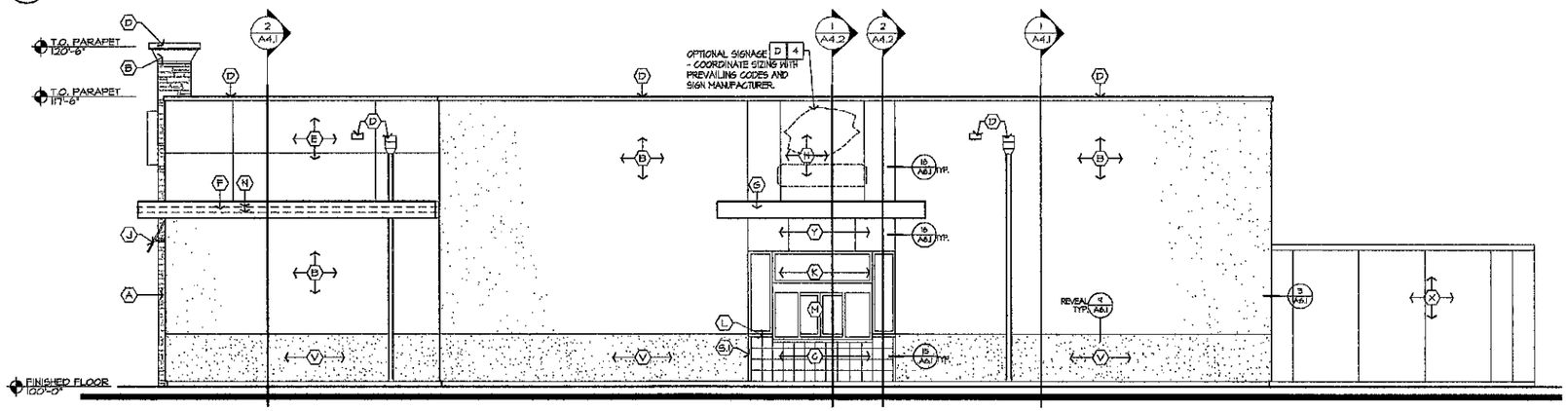

2 A3.1 DRIVE-THRU ELEVATION

SCALE: 1/4" = 1'-0"

EXTERIOR ELEVATION KEYNOTES: (GRILL & CHILL) STD

(A) STONE CHIMNEY:
MFGR: CULTURED STONE BY BORAL
STYLE: COUNTRY LEDGE STONE - WET STACK
COLOR: CHARDONNAY 20006
SUPPLIER: CULTURED STONE BY BORAL
GROUT: GREY

(B) EIFS:
MFGR: STO CORPORATION
COLOR: NAH-0034 (MATCHES BENJAMIN MOORE SANDY BROWN #1046)
FINISH: 306 STO MEDIUM SAND
VENDOR: STO CORPORATION
NOTE: PROVIDE HIGH IMPACT EIFS FROM GRADE TO 3'-0" A.F.F.

(C) CERAMIC TILE D.T. WAINSCOT:
MFGR: INTERCERAMIC
SERIES: LIPSTICK
COLOR: BOMBANELLI RED
SIZE: 8"x8"
GROUT: "LATICRETE"
GROUT COLOR: ALMOND #65
SUPPLIER: HJC
NOTE: MUST BE INSTALLED PER TILE COUNCIL OF NORTH AMERICA "W244E-04" AND ANSI "A118.4"

(D) COPING & SCUPPERS:
MFGR: UNA-CLAD
MAT.: 24 GA. STEEL
COLOR: ALMOND
FINISH: KYNAR 500

(E) METAL PANEL:
MFGR: ALPOLIC
STYLE: 3MM
COLOR: DQ RED
NOTE: MUST BE INSTALLED HORIZONTALLY. REFERENCE ARROWS ON BACK OF PANEL MUST BE ALIGNED IN THE SAME DIRECTION.
VENDOR: NU LOOK EXTERIORS

(F) METAL EYEBROW & FLASHING:
MFGR: UNA-CLAD
STYLE: .040 ALUMINUM
COLOR: MATTE BLACK
FINISH: KYNAR 500
VENDOR: NU LOOK EXTERIORS

(G) METAL CANOPY & FLASHING:
MFGR: UNA-CLAD
STYLE: .040 ALUMINUM
COLOR: CLEAR ANODIZED SATIN
VENDOR: NU LOOK EXTERIORS

(H) METAL PANEL:
MFGR: ALPOLIC
MATERIAL: 3MM
COLOR: DQ BLUE
VENDOR: NU LOOK EXTERIORS

(J) FABRIC AWNING:
MFGR: COOL PLANET AWNING
MATERIAL: SUNBRELLA
COLOR: JOCKEY RED
FRAME: 1"x1" ALUMINUM (WELD ALL JOINTS, GRIND SMOOTH)
FINISH: ANODIZED CLEAR SATIN
VENDOR: COOL PLANET AWNING OR HJC

(K) STOREFRONT:
MFGR: YKK AP AMERICA INC.
STYLE: 2"x4 1/2"
FINISH: CLEAR SATIN ANODIZED ALUMINUM
GLAZING: CLEAR, 1" INSULATED, LOW E

(K) STOREFRONT:
MFGR: YKK AP AMERICA INC.
STYLE: 2"x4 1/2"
FINISH: DARK BRONZE SATIN ANODIZED ALUMINUM
GLAZING: CLEAR, 1" INSULATED, LOW E

(L) WINDOW SILL FLASHING:
MFGR: YKK AP AMERICA INC.
FINISH: ANODIZED CLEAR SATIN
SIZE: 2" AS REQD BY LOCATION

(M) DRIVE-THRU WINDOW:
MFGR: QUIKSERV
MATERIAL: ALUMINUM
FINISH: ANODIZED CLEAR SATIN
VENDOR: K. HASSERSTROM & SONS

(N) STRIP LIGHTING:
MFGR: MORGAN HOPE
STYLE: LED-Flex WITH BLACK TRACK
MODEL: LED-HH-120V-EB (BLUE LED)
VENDOR: HJC
NOTE: MUST BE INSTALLED PER MANUFACTURERS REQUIREMENTS

(Q) TRASH ENCLOSURE SOLID COLOR STAIN:
MFGR: BENJAMIN MOORE
COLOR: SANDY BROWN #1046
PRODUCT: ARBORCOAT WATERBORNE SOLID DECK & SIDING STAIN #6440
PRIMER: SELF PRIMING ON MOST SURFACES (SEE TECH. DATA SHEET FOR DETAILS)

(S) TRANSITION TRIM:
SIZE: 1 1/2"D. x2"W. HAT CHANNEL
FINISH: CLEAR SATIN ANODIZED ALUMINUM

(T) PAINT SERVICE DOOR & FRAME:
MFGR: BENJAMIN MOORE
COLOR: SANDY BROWN #1046
PRODUCT: AURA EXTERIOR PAINT LOW LUSTRE #634
PRIMER: FIRST COAT - AURA EXTERIOR PAINT LOW LUSTRE #634

(V) EIFS:
MFGR: STO CORPORATION
COLOR: NAH-0034 (MATCHES BENJAMIN MOORE ALGONQUIN TRAIL #1055)
FINISH: 306 STO MEDIUM SAND
VENDOR: STO CORPORATION
NOTE: PROVIDE HIGH IMPACT EIFS FROM GRADE TO 3'-0" A.F.F.

(X) WALK-IN COOLER/FREEZER:
MFGR: NORLAKE
COLOR: PREFINISHED FROM MANUFACTURER TO MATCH BUILDING
VENDOR: HASSERSTROM
NOTE: SEE EQUIPMENT SCHEDULE FOR DETAILS

(Y) BREAK METAL CLOSURE:
MFGR: UNA-CLAD
FINISH: CLEAR SATIN ANODIZED ALUMINUM
VENDOR: NU LOOK EXTERIORS

NEW BUILDING FOR:

JOPLIN, MISSOURI
STORE #44987

AMERICAN DAIRY QUEEN
MINNEAPOLIS, MN U.S.A.
*REGISTERED U.S. PATENT OFFICE. AMERICAN DAIRY QUEEN CORPORATION. THIS DRAWING, ITS DESIGN DETAIL AND INVENTION ARE THE PROPERTY OF AMERICAN DAIRY QUEEN INC. (ADQ) AND SHALL NOT BE COPIED IN ANY MANNER NOR DISCLOSED TO ANY OUTSIDE PARTY WITHOUT ADQ CONSENT.

MISSOURI ARCHITECT LICENSE NUMBER
A-2009027291

SPECIAL NOTICES
In the event the client consents to, allows, authorizes or approves of changes to any plans, specifications or other construction documents, and these changes are not approved in writing by the design professional, the client recognizes that such changes and the results thereof are not the responsibility of the design professional. Therefore, the client agrees to release the design professional from any liability arising from the construction, use or result of such changes. In addition, the client agrees to the fullest extent permitted by law, to indemnify and hold the design professional harmless from any damage, liability or cost (including reasonable attorney's fees and costs of defense) arising from such changes. Copyright © 2017 by John S. Odom, Architect. All rights reserved. No part of this drawing may be reproduced by photocopy or by any other means, or stored, processed, or transmitted in or by any computer or other systems without the prior written permission of the Architect

ISSUE DATE: 10-24-17
REVISION DATE:
10-24-17 ORIGINAL ISSUE
1
2

ELEVATIONS

SHEET NUMBER:
A3.1

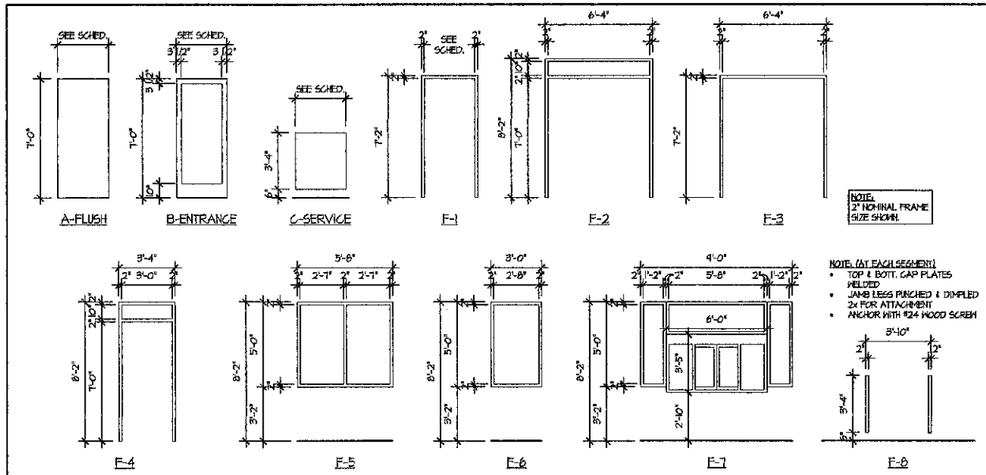

OPENING SCHEDULE

NATIONAL ACCOUNT DOOR AND FRAME SUPPLIER (FLAM, WOOD AND H.M.)
HAMILTON PARKER, SEE NATIONAL VENDORS LIST

OPNG. NO.	OPENING LOCATION	DOOR/WINDOW SIZE	DOOR/WINDOW TYPE	DOOR/WINDOW MATERIAL	DOOR/WINDOW FINISH	FRAME TYPE	FRAME MATERIAL	FRAME FINISH	FIRE RATING	HARDWARE GROUP	NOTES:
100A	VESTIBULE (EXT.)	(2) 3'-0" x 7'-0" x 1 3/4"	B	ALUM.	BRONZE	F2	ALUM.	BRONZE	-	E1	
100B	VESTIBULE (INT.)	(2) 3'-0" x 7'-0" x 1 3/4"	B	ALUM.	BRONZE	F3	ALUM.	BRONZE	-	E2	MOUNT BOTTOM OF DOOR FRAME LEVEL WITH TOP OF FLOOR TILE
101A	DINING ROOM	5'-8" x 5'-0"				F5	ALUM.	BRONZE	-		-
101B	DINING ROOM	5'-8" x 5'-0"				F5	ALUM.	BRONZE	-		-
101C	DINING ROOM	5'-8" x 5'-0"				F5	ALUM.	BRONZE	-		-
101D	DINING ROOM	5'-8" x 5'-0"				F5	ALUM.	BRONZE	-		-
101E	DINING ROOM	5'-8" x 5'-0"				F5	ALUM.	BRONZE	-		-
101F	TO PATIO	3'-4" x 8'-2" x 1 3/4"	B	ALUM.	BRONZE	F4	ALUM.	BRONZE	-	E3	-
102	WOMENS	3'-0" x 7'-0" x 1 3/4"	A	P.C.	PLAM	F1	H.M.	PAINT	-	R2	UNDERCUT BY 1". - PLAM; WILSONART LIMBER MAPLE 10734-60
103	MENS	3'-0" x 7'-0" x 1 3/4"	A	P.C.	PLAM	F1	H.M.	PAINT	-	R2	UNDERCUT BY 1". - PLAM; WILSONART LIMBER MAPLE 10734-60
104	DRIVE THRU	4'-0" x 5'-0"				F1	ALUM.	CLEAR	-	-	-
106	OFFICE	3'-0" x 7'-0" x 1 3/4"	A	P.C.	PLAM	F1	H.M.	PAINT	-	O	UNDERCUT BY 1". - PLAM; WILSONART LIMBER MAPLE 10734-60
107	SERVICE	3'-6" x 7'-0" x 1 3/4"	A	H.M.	PAINT	F1	H.M.	PAINT	-	S1	SEE EXTERIOR ELEVATIONS FOR COLOR
108	OPTIONAL EXT. GATE	3'-6" x 5'-4"	C	GALV.	PAINT	F8	H.M.	PAINT	-	S2	SEE A1.3 SHEET FOR OPTIONAL OUTDOOR STORAGE ENCLOSURE

NOTES:
1. PARTICLE CORE DOORS: SIZE AS PER PLAN AND SCHEDULE. ALL EDGES/SURFACES TO BE COVERED WITH PLASTIC LAMINATE.
2. HOLLOW METAL DOORS): SIZE AS PER PLAN AND SCHEDULE. (HOT ROLLED LEVEL 2 MODEL 2) STEEL TO BE 18 Ga., INTERIOR TO BE FOAM INSULATION, WITH INTEGRAL REINFORCEMENT FOR CLOSURE AND PANIC HARDWARE.

ALUM = ALUMINUM
HM = HOLLOW METAL
PC = PARTICLE CORE
BRZ = ANODIZED ALUMINUM STATUTORY BRONZE FINISH
CLR = ANODIZED ALUMINUM CLEAR FINISH
PNT = SEE INTERIOR ELEVATIONS AND FINISH SCHEDULE FOR COLOR

HARDWARE GROUPS

NATIONAL ACCOUNT DOOR HARDWARE
HAMILTON PARKER, SEE NATIONAL VENDORS LIST

GROUP #E1: TYPICAL EXTERIOR VESTIBULE DOORS
HARDWARE PART OF DOOR MANUFACTURERS PACKAGE
- CLOSER: HAGER MFG., MODEL #5200 SPR CSH CLOSER.
- HINGES: HAGER MFG., MDL #BB1194 32DB WITH NON-REMOVABLE PINS, 4.5"x4.5"x0.180" THK., (4) HINGES PER LEAF.
- KEYED CYLINDERS: HAGER MFG., MDL# 3902 MORTISE CYLINDER, PROVIDE (2) KEYS PER DOOR, ALL CYLINDERS KEYED ALIKE. (MOUNTED AT 34" AFF, COORDINATE W/ SPOON HANDLE)
- SPOON HANDLE (PROVIDED & INSTALLED BY ALUM. STOREFRONT CONTRACTOR, AVAILABLE FROM H.C. SEE ADG NATIONAL VENDORS LIST)
- PUSH BAR: HAGER MFG., 1305
- SWEEP: HAGER MFG., MDL #8015B, MIL ALUM FINISH, SIZED TO FIT DOOR WIDTH.
- THRESHOLD: HAGER MFG., MDL. #412 S, MIL ALUM FINISH, SIZED TO FIT DOOR OPENING WIDTH.
- WEATHERSTRIPPING:

1. THE G.C. TO PROVIDE DOOR SIGNAGE STATING "THIS DOOR TO REMAIN UNLOCKED DURING BUSINESS HOURS" (SINGLE LINE HORIZONTAL SIGN PREFERRED)
2. THE DQ RED SPOON HANDLES HAVE SPECIAL INSTALLATION REQUIREMENTS. ALUMINUM STOREFRONT MANUFACTURER MUST COORDINATE LOCK & HANDLE HEIGHTS.

GROUP #S1: TYPICAL REAR SERVICE DOOR
- CLOSER: HAGER MFG. MODEL #5200 SPR CSH CLOSER.
- EXIT DEVICE: HAGER MFG., MDL #4701 RIM US28, SPRAYED ALUMINUM FINISH.
- HINGE(S): HAGER MFG., MDL #SCBB 1100 US26D WITH NON-REMOVABLE HINGE PINS, 4.5" X 4.5" X 0.134" THK., (4) HINGES PER LEAF.
- KICK PLATE: HAGER MFG., MDL #ARMOR PLATE, 40"W X 20"H X 0.05" THK.
- PROTECTOR, TRIM: HAGER., MFG., MDL #HD2250
- PULL: HAGER MFG., MDL#4.83D, (EXTERIOR SIDE OF DOOR).
- SWEEP: HAGER MFG., MDL #8015 V, MIL ALUM FINISH, SIZED TO FIT DOOR WIDTH.
- THRESHOLD: HAGER MFG., MDL #412S, MIL ALUM FINISH, SIZED TO FIT DOOR OPENING WIDTH.
- VIEWER: HAGER MFG., 1756 US26D, 200 DEGREE VIEW (FACTORY INSTALLED).
- WEATHERSTRIPPING: HAGER MFG., MDL #8415 V, MIL ALUM FINISH, SIZED TO FIT DOOR.
- EXIT ALARM: EAX BATTERY POWERED DOOR MOUNTED WEATHERIZED EXIT ALARM, EAX-DOOR

GROUP #S2: (TYPICAL INSTALLATION AT EXT. ENCLOSURE).
- SPRING HINGE(S): HAGER MFG., MDL #1150 32D, 4.5" X 4.5" X 0.180" THK., (2) HINGES PER LEAF.
- PASSAGE SET: HAGER 3810 26D
- DOOR MUTES

GROUP #R2: TYPICAL RESTROOM DOOR
- CLOSER: HAGER MFG. MODEL #5200 CLOSER.
- HINGES: HAGER MFG., MDL #SCBB 1100 US26D, 4.5" X 4.5" X 0.134" THK., (3) HINGES PER LEAF.
- KICK PLATE: HAGER MFG., MDL#409 18 Ga. 34"W X 10"H X 0.05" THK. (MOUNTING HOLES PREDRILLED AT FACTORY, INSTALLED ON PUSH SIDE OF DOOR).
- STOP, DOOR: HAGER MFG., MDL #2324 32D, BRUSHED CHROME, 2 1/2" DIA, WALL MOUNT.
- 4x16 PUSH PLATE
- FULL HANDLE: HAGER 3E320

GROUP #E2: TYPICAL INTERIOR VESTIBULE DOORS
HARDWARE PART OF DOOR MANUFACTURERS PACKAGE
- CLOSER: HAGER MFG. MODEL #5200 SPR CSH CLOSER.
- HINGE(S), HAGER MFG., MDL. #BB1194 32DB WITH NON-REMOVABLE HINGE PINS, 4.5" X 4.5" X 0.180" THK., (4) HINGES PER LEAF.
- PUSH/PULL: HAGER MFG., MDL#1460 LH COMBO 32DB, & MDL#1460 RH COMBO 32DB.
- FLOOR STOP: HAGER 241F 26D DOME LOW STOP, (1) PER LEAF

GROUP #E3: TYPICAL EXTERIOR PATIO/EGRESS DOOR
HARDWARE PART OF DOOR MANUFACTURERS PACKAGE
- CLOSER: HAGER MFG. MODEL #5200 SPR CSH CLOSER.
- DEAD BOLT: ADAMS RITE MS1850S
- HINGE(S), HAGER MFG., MDL #BB1191 32DB WITH NON-REMOVABLE HINGE PINS, 4.5" X 4.5" X 0.180" THK., (4) HINGES PER LEAF.
- KEYED CYLINDERS: HAGER MFG., MDL# 3402 MORTISE CYLINDER, PROVIDE (2) KEYS PER DOOR, ALL CYLINDERS KEYED ALIKE. (MOUNTED AT 34" AFF, COORDINATE W/ SPOON HANDLE)
- SPOON HANDLE (PROVIDED & INSTALLED BY ALUM. STOREFRONT CONTRACTOR, AVAILABLE FROM H.C. SEE ADG NATIONAL VENDORS LIST)
- PUSH BAR: HAGER MFG., 130
- SWEEP: HAGER MFG., MDL #8015B, MIL ALUM FINISH, SIZED TO FIT DOOR WIDTH.
- THRESHOLD: HAGER MFG., MDL #4125, MIL ALUM FINISH, SIZED TO FIT DOOR OPENING WIDTH.
- WEATHERSTRIPPING:

1. THE G.C. TO PROVIDE DOOR SIGNAGE STATING "THIS DOOR TO REMAIN UNLOCKED DURING BUSINESS HOURS" (SINGLE LINE HORIZONTAL SIGN PREFERRED)
2. THE DQ RED SPOON HANDLES HAVE SPECIAL INSTALLATION REQUIREMENTS. ALUMINUM STOREFRONT MANUFACTURER MUST COORDINATE LOCK & HANDLE HEIGHTS.

GROUP #O: TYPICAL OFFICE DOOR
- CLOSER: HAGER MFG. MODEL #5200 CLOSER.
- HINGE(S), HAGER MFG., MDL #SCBB 1100 US26D, 4.5" X 4.5" X 0.134" THK., (3) HINGES PER LEAF.
- KICK PLATE: HAGER MFG., MDL#406 18 Ga. 34"W X 10"H X 0.05" THK. (MOUNTING HOLES PREDRILLED AT FACTORY, INSTALLED ON PUSH SIDE OF DOOR).
- STOP, DOOR: HAGER MFG., MDL #2324 32D, BRUSHED CHROME, 2 1/2" DIA, WALL MOUNT.
- LOCKSET: 3555 US26D-WITHHELL (KEYED)

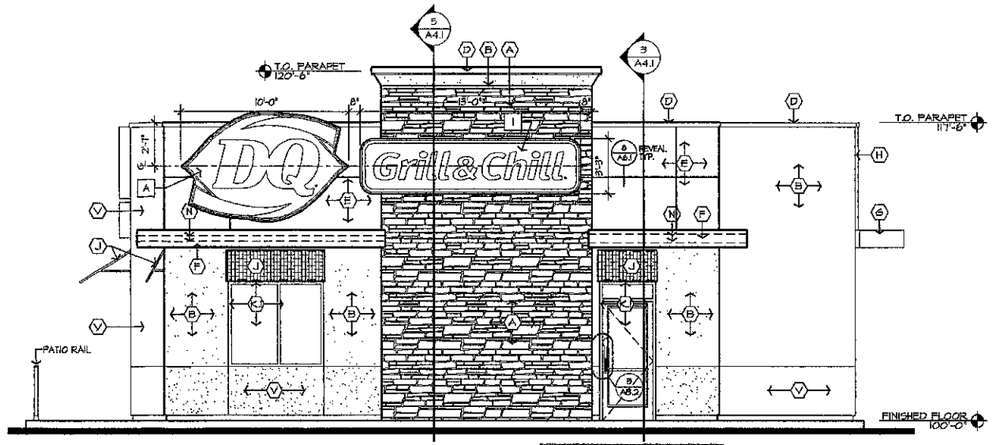

1 A3.2 **FRONT ELEVATION**
SCALE: 1/4" = 1'-0"

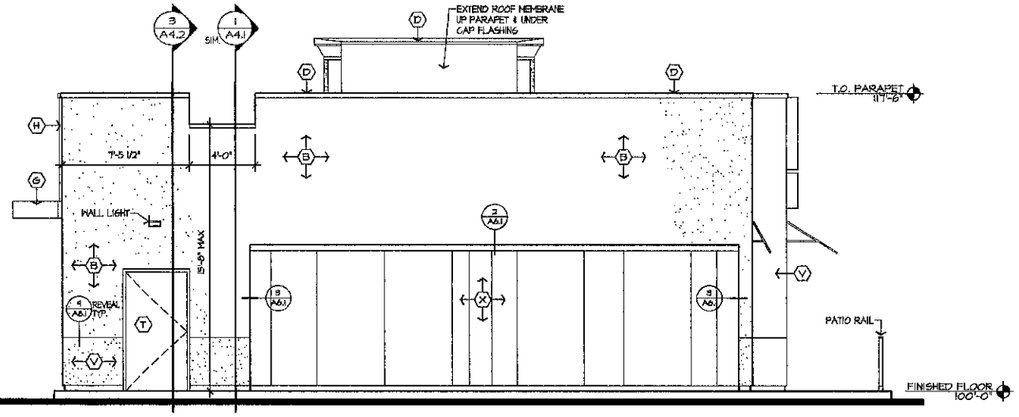

2 A3.2 **REAR ELEVATION**
SCALE: 1/4" = 1'-0"

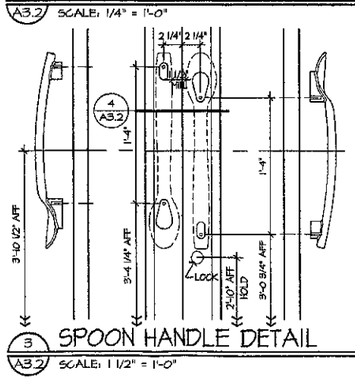

3 A3.2 **SPOON HANDLE DETAIL**
SCALE: 1 1/2" = 1'-0"

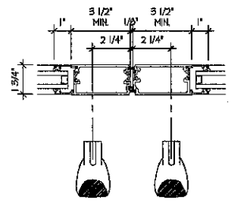

4 A3.2 **SPOON HANDLE DETAIL**
SCALE: 3" = 1'-0"

NEW BUILDING FOR:
DQ Grill & Chill
JOPLIN, MISSOURI
STORE #14587

AMERICAN DAIRY QUEEN
MINNEAPOLIS, MN U.S.A.
*REGISTERED U.S. PATENT OFFICE. AMERICAN DAIRY QUEEN CORPORATION. THIS DRAWING, ITS DESIGN DETAIL AND INVENTION ARE THE PROPERTY OF AMERICAN DAIRY QUEEN (A.D.Q.) AND SHALL NOT BE COPIED IN ANY MANNER NOR DISCLOSED TO ANY OUTSIDE PARTY WITHOUT ADQ CONSENT.

MISSOURI ARCHITECT LICENSE NUMBER
A-2008027291

SPECIAL NOTICES
In the event the client consents to, allows, authorizes or approves of changes to any plans, specifications or other construction documents, and these changes are not approved in writing by the design professional, he does recognize that such changes and the results thereof are not the responsibility of the design professional. Therefore, the client agrees to release the design professional from any liability arising from the construction, use or result of such changes. In addition, the client agrees to the fullest extent permitted by law, to indemnify and hold the design professional harmless from any damage, liability or cost (including reasonable attorney's fees and costs of defense) arising from such changes. Copyright © 2017 by John S. Odom, Architect. All rights reserved. No part of this drawing may be reproduced by photocopy or by any other means, or stored, processed, or transmitted in or by any computer or other systems without the prior written permission of the Architect

ISSUE DATE: 10-24-17
REVISION DATE:
10-24-17 ORIGINAL ISSUE
1
2

ELEVATIONS, DOOR & FRAME TYPES

SHEET NUMBER:
A3.2

Case 037-17: 2015 East 32nd Street (vacant lot located west of 2023 East 32nd Street)- A request to Review the Site Plan for a Fast Food Restaurant- Reyling Design & Consulting.

Mr. Bolander stated that he would represent Reyling Design. The property is zoned commercial in a planned overlay district, which means development plans, sight plans must come before the planning and zoning commission and City Council for approval. Staff has reviewed this request. This proposal is for a fast food restaurant with a drive thru window. The parking, landscaping and the accessibility follows the Zoning Regulations. They have agreed not to have access on 32nd Street. Staff recommends approval.

Is there anyone else here to speak in favor of the request?

Kirt Ramseur, Owner stated that he would like to put a Dairy Queen in the City of Joplin and looking forward to being here and serving the community.

Mr. Cortez stated that it was a little premature but was wondering approximately how many employees there will be?

Mr. Ramseur stated approximately 40 employees, 15 full time employees and approximately 25 part time employees.

Mr. Duncan asked if there were any other questions from the Commissioners for either Mr. Bolander or Mr. Ramseur. There were not.

Is there anyone to speak in opposition of this request? There was not.

Mr. Duncan Closed the hearing.

MR. RAMSOUR MADE A MOTION, SECOND BY MRS. STEELE THAT CASE 037-17 BE FORWARD TO CITY COUNCIL FOR APPROVAL. THE MOTION CARRIED, WITH MR. DUNCAN, MR. CORTEZ, MR. RAMSOUR, MS. BRUECKNER-SEARS MR. DERMOTT, MS. KOELKEBECK, AND MS. STEELE VOTING "AYE". (7 IN FAVOR, 0 NAYS).

City of **JOPLIN** City Council Agenda Item

Requested Council Meeting Date: January 2, 2018

Item: SITE PLAN REVIEW FOR 2015 EAST 32ND STREET (VACANT LOT LOCATED WEST OF 2023 EAST 32ND STREET).
Originating Department: PLANNING & COMMUNITY DEVELOPMENT

Attachments: 1) Planning Report
2) Commission Minutes
3) Copy of Site Plans

Planning/Community Development Manager: Troy Bolander
City Attorney: Peter C. Edwards
City Manager: Samuel L. Anselm
Board or Commission: Planning and Zoning Commission Date: 12/11/17

Recommended Action: Planning and Zoning Commission recommended approval by a vote of 7 In Favor.

SUMMARY/REQUEST:
Case 037-17: 2015 East 32nd Street (vacant lot located west of 2023 East 32nd Street) - A request to Review the Site Plan for a fast food restaurant – Reyling Design & Consulting.

STAFF SUMMARY:
This Site Plan Review is for the construction of a new fast food restaurant. The proposed restaurant footprint is approximately 2,600 sq. ft. and will contain 70 seats. The site plan contains adequate off-street parking and the proposed landscaping plans meets the requirements of our code.

Staff recommends approval of Case 037-17.

PLANNING & ZONING COMMISSION TESTIMONY:
Mr. Bolander stated that he would represent Reyling Design. The property is zoned commercial in a planned overlay district, which means development plans, sight plans must come before the planning and zoning commission and City Council for approval. Staff has reviewed this request it is a fast food, drive thru restaurant and is in compliance with parking, landscaping and access. They have agreed not to have access on 32nd Street. Staff recommends approval.

Kirt Ramseur stated that they want to put a Dairy Queen in Joplin and looking forward to being here and serving the community.

Mr. Cortez was wondering approximately how many employees there will be?

Mr. Ramseur stated approximately 40 employees, full time employees will be around 15.

Mr. Duncan asked if there were any other questions from the Commissioners. There were not.

Is there anyone else here to speak in favor of the request? There was not.

Is there anyone to speak in opposition of this request? There was not.

PUBLIC COMMENT:
None.