JOPLIN CITY COUNCIL
REGULAR MEETING AGENDA
TUESDAY, JANUARY 21, 2020
5th FLOOR COUNCIL CHAMBERS
602 S. MAIN ST. JOPLIN MO
6:00 PM

1. **Call To Order**
   Invocation
   Pledge of Allegiance of the United States of America

2. **Roll Call**

3. **Presentations**

   1. Joplin High School Student Council (JHS STUCO) To Present An Update To City Council On Joplin High School Events.

   2. Retirement Resolution To Recognzie Mary Anne Phillips, Recycling Coordinator

      Documents:

      PHILLIPS, MARY ANNE.PDF

4. **Finalization Of Consent Agenda**

5. **Reports And Communications**

6. **Citizen Requests And Petitions**

7. **Public Hearings**

8. **Consent Agenda**

   1. Minutes Of The January 6, 2020 City Council Meeting

      Documents:

      MINS. JAN. 6.PDF

   2. COUNCIL BILL NO. 2019-285
      AN ORDINANCE providing to vacate approximately 90 feet of a 10-foot-wide utility easement and approximately 185 feet of a 10-foot-wide utility easement running East/West located in the 2300 block of the East side of S. Wisconsin Ave.

      Documents:

      CB2019-285.PDF

   3. COUNCIL BILL NO. 2019-286
      AN ORDINANCE providing for the vacation of approximately 440 feet of a 20-foot-wide utility easement, and 115 feet of a 15-foot-wide storm sewer and public utility easement located in the 1700 block of the South side of W 26th Street in the City of Joplin, Jasper County, Missouri.

      Documents:

CB2019-286.PDF

4. COUNCIL BILL NO. 2019-288
AN ORDINANCE providing the vacation for a public street located 150 feet of S. McCoy Ave., approximately 150 feet South of the intersection of S. McCoy Ave. and W. 4th St. in the City of Joplin, Jasper County, Missouri.

Documents:

CB2019-288.PDF

5. COUNCIL BILL NO. 2019-289
AN ORDINANCE establishing grades and accepting the Final Plat of Hal's Subdivision located at NW Corner of W 26th St. & S. Roosevelt Ave. in the City of Joplin, Jasper County, Missouri.

Documents:

CB2019-289.PDF

6. COUNCIL BILL NO. 2019-600
AN ORDINANCE authorizing the City of Joplin, Missouri ("City"), a municipal corporation, to enter into an agreement with Joplin Schools ("District"), a political subdivision and public school district of the State of Missouri, for the purpose of providing a school resource officer program between City and District; and authorizing the Interim City Manager to execute said agreements by and on behalf of the City of Joplin.

Documents:

CB2020-600.PDF

9. **Resolutions**

10. **Ordinances - Emergency**

1. COUNCIL BILL 2020-103
AN ORDINANCE approving the City of Joplin to enter into a Cost Share Agreement with the Missouri Highways and Transportation Commission; authorizing the City Manager or his designee to execute the same by and on behalf of the City of Joplin; and containing an emergency clause.

Documents:

CB2020-103 SUMMARY SHEET.PDF
CB2020-103 AGREEMENT.PDF
CB2020-103 CONCEPTUAL PLAN.PDF
CB2020-103 COUNCIL ORDINANCE.PDF

2. COUNCIL BILL NO. 2020-104
AN ORDINANCE approving the City of Joplin to enter into a construction agreement with B-3 Contractors, in the amount of Two Hundred Seventeen Thousand Six Hundred Fifty-Seven and 35/100 dollars ($217,657.35) for construction of the NID IV Sidewalk 2019 Project; and authorizing the City Manager or his designee to execute the same by and on behalf of the City of Joplin; and containing an emergency clause.

Documents:

NID IV SUMMARY SHEET.PDF
BID TABULATION.PDF
NID IV SIDEWALK 2019.JPG
NID IV CB.PDF
CB2020-104 AGREEMENT.PDF

3. COUNCIL BILL NO. 2020-601

AN ORDINANCE authorizing the City of Joplin to enter into an agreement with Mid America Fire Apparatus Inc., a Missouri Corporation, for the purpose of purchasing one (1) new and unused E-One Typhoon HP75 with rear-mount aerial for the not to exceed price of Nine-Hundred Eight Thousand Five-Hundred Eighty-Eight Dollars and No Cents ($908,588.00); authorizing the Interim City Manager or his designee to execute the same by and on behalf of the City of Joplin; amending the Annual Budget of the City of Joplin for the Fiscal Year 2019-2020 as adopted by Ordinance 2019-166 on October 21, 2019; and, containing an emergency clause.

Documents:

COUNCIL BILL 2020-610 QUINT REPLACEMENT.PDF
SUMMARY SHEETCB 2020-601 QUINT REPLACEMENT.PDF
JOPLIN HP75 SALES AGREEMENT 01-10-2020.PDF
100715 V91 HP75 HGAC INDEXED LONG SPEC 01-10-2020.PDF

11. Ordinances - First Reading

1. COUNCIL BILL NO. 2020-602
AN ORDINANCE authorizing the City of Joplin to enter into a first amendment to memorandum of understanding with the Wildcat Glades Friends Group, a Missouri Nonprofit Corporation ("Friends Group") for the purpose of establishing responsibilities in maintaining and operating Wildcat Park; and authorizing the Interim City Manager to execute said memorandum of understanding by and on behalf of the City of Joplin.

Documents:

GS 2020-602 WILDCAT GLADES COJ-FRIENDS GROUP AMENDMENT.PDF
CB 2020-602 WILDCAT GLADES COJ-FRIENDS GROUP AMENDMENT.PDF
COJ - WILDCAT GLADES FRIENDS GROUP MOU FIRST AMENDMENT.PDF
ORDINANCE 2019-081 COJ FRIENDS GROUP MOU.PDF
COJ - WILDCAT GLADES FRIENDS GROUP MOU FIRST AMENDMENT EXHIBIT C.PDF

12. Ordinances - Second Reading And Third Reading

13. Unfinished Business

14. New Business

1. News From Public Information Officer Lynn Onstot

2. Vote To Go Into Closed Session, Which Shall Pertain To The Hiring, Firing, Disciplining, Or Promotion Of An Employee Or Particular Employees Of A Governmental Body Involving Personal Information; As Set Forth In Section

610.021(3) RSMo, As Amended, 2019. This Meeting, Record, And Vote To Be Closed To The Extent Provided By Law. The City Council Shall Adjourn At The End Of The Session.

Anyone wishing to address the Council should step to the podium and state his/her name and address. If the matter is not a Public Hearing, a request to speak to the Council should be prepared prior to the meeting. Speaking time will be limited to five (5) minutes.

Sound enhancement units are available for hearing impaired customers who provide a form of identification as security, which will be returned to the customer upon the return of the unit.

Those in need of disability-related auxiliary aids or services should contact the City Clerk's office at (417) 624-0820, ext. 220 no later than 48 hours prior to the meeting.

Notice posted at ____ p.m. on this the __ day of ____, ____. (RSMo 610.020)

RESOLUTION

A RESOLUTION recognizing Mary Anne Phillips upon her retirement from active service as the Recycling Coordinator within the City of Joplin Public Works / Recycling Division.

WHEREAS, on Friday, January 17, 2020, Mary Anne Phillips retired from active service with City Public Works / Recycling Division; and

WHEREAS, Mary Anne Phillips served residents of Joplin in an outstanding manner during Twenty-Two Years of service over her career; and

WHEREAS, upon her departure, the people of Joplin wish to extend recognition and appreciation to Mary Anne Phillips for her many contributions through the years.

BE IT RESOLVED BY THE COUNCIL OF THE CITY OF JOPLIN, MISSOURI, AS FOLLOWS:

Section 1. The City of Joplin does hereby recognize and extend appreciation to Mary Anne Phillips for service of Twenty-Two Years to the City of Joplin in the Recycling Services Division and residents of this great city.

Section 2. That the people of Joplin, Missouri do hereby extend best wishes to Mary Anne for many enjoyable and successful years.

IN WITNESS WHEREOF, I have hereunto set my hand and caused the Seal of the City of Joplin, Missouri to be affixed this 21st day of January 2020.

_____

Gary L. Shaw, Mayor

ATTEST:

_____

Barbara J. Gollhofer, City Clerk

JOPLIN CITY COUNCIL
JANUARY 6, 2020 MEETING MINUTES

CALL TO ORDER

The regular meeting of the Joplin City Council was called to order at 6:00 p.m.by Mayor Gary Shaw.

INVOCATION was read by City Clerk Barbara Gollhofer.

PLEDGE OF ALLEGIANCE to the United States of America was led by Mr. Lawson.

ROLL CALL

Answering Roll Call were Council Members: Taylor Brown, Melodee Colbert-Kean, Keenan Cortez, Doug Lawson, Anthony Monteleone, Diane Reid Adams, Gary Shaw, and Phil Stinnett. Also, in attendance were Interim City Manager Dan Pekarek and Assistant City Attorney Jordan Paul. Absent: Ryan Stanley. Motion by Mrs. Colbert-Kean, second by Mr. Cortez to excuse Mr. Stanley. Voting in favor were Council Members: Brown, Colbert-Kean, Cortez, Lawson, Monteleone, Reid Adams, Shaw, and Stinnett, 8. Nays: 0.

PRESENTATIONS

Mayor Shaw presented a proclamation to City of Joplin's Recycling Coordinator, Mary Anne Phillips, to recognize the 20th Anniversary of Joplin Recycling Center. Mrs. Phillips thanked the employees of the recycling center and Midwest Fibre Corporation for partnering with the City to provide wonderful recycling services and encouraged everyone to support the recycling efforts.

FINALIZATION OF CONSENT AGENDA

There being no further business to come before the Council, the Consent Agenda was finalized.

REPORTS AND COMMUNICATIONS

CITIZEN REQUESTS AND PETITIONS

PUBLIC HEARINGS

Public Hearing Procedures read by City Clerk Barbara Gollhofer

Public Hearing for Council Bill No. 2019-284

Mayor Shaw opened the Public Hearing

No one appeared in favor of, or in opposition to this item.

The Public Hearing was closed.

Mr. Stinnett introduced Council Bill No. 2019-284 - an ordinance amending Ordinance No. 2004-256, passed by the Council of the City of Joplin, Missouri, November 15, 2004, by removing from District M-2-PD and including in District R-3 property as described below and located at 3110 E. 13th St., in the City of Joplin, Jasper County, Missouri. Motion by Mr. Stinnett, second by Mr. Lawson to Table Council Bill No. 2019-284. Voting in favor were Council Members: Brown, Colbert-Kean, Cortez, Lawson, Monteleone, Reid Adams, Shaw, and Stinnett, 8. Nays: 0. Absent: Stanley, 1. Council Bill No. 2019-284 was **Tabled**.

Public Hearing for Council Bill No.2019-285

Mayor Shaw opened the Public Hearing.

No one appeared in favor of or in opposition to this item.

The Public Hearing was closed.

Mr. Stinnett introduced Council Bill No.2019-285 - an ordinance providing to vacate approximately 90 feet of a 10-foot-wide utility easement and approximately 185 feet of a 10-foot-wide utility easement running East/West located in the 2300 block of the East side of S. Wisconsin Ave. Motion by Mr. Stinnett, second by Dr. Reid Adams that Council Bill No.2019-285 be passed on First Reading and advanced to Second and Third Reading. Voting in favor were Council Members: Brown, Colbert-Kean, Cortez, Lawson, Monteleone, Reid Adams, Shaw, and Stinnett, 8. Nays: 0. Absent: Stanley, 1. The Council Bill was read as **Council Bill No. 2019-285**.

Public Hearing for Council Bill No.2019-286

Mayor Shaw opened the Public Hearing

Kevin Parker, 115 Illinois, appeared in favor of this item.

No one appeared in opposition to this item.

The Public Hearing was closed.

Mr. Lawson introduced Council Bill No. 2019-286 - an ordinance providing for the vacation of approximately 440 feet of a 20-foot-wide utility easement, and 115 feet of a 15-foot-wide storm sewer and public utility easement located in the 1700 block of the South side of W. 26th Street in the City of Joplin, Jasper County, Missouri. Motion by Mr. Lawson, second by Mrs. Colbert-Kean that Council Bill No.2019-286 be passed on First Reading and advanced to Second and Third Reading. Voting in favor were Council Members: Brown, Colbert-Kean, Cortez, Lawson, Monteleone, Reid Adams, Shaw, and Stinnett, 8. Nays: 0. Absent: Stanley, 1. The Council Bill was read as **Council Bill No. 2019-286.**

Public Hearing for Council Bill No.2019-287

Mayor Shaw opened the Public Hearing

Joel Standiford, 423 E. 4th St., Joplin, read a prepared statement in favor of this item.

Mariam Ahktar, 1816 S. Michigan appeared in opposition to this item, stating she would like to see this area kept as a growing residential neighborhood.

The Public Hearing was closed.

Mr. Brown introduced Council Bill No. 2019-287 - an ordinance amending Ordinance No. 2004-256, passed by the Council of the City of Joplin, Missouri, November 15, 2004, by removing from District R-1 and including in District C-1 property as described below and located West of the

Intersection of E. 19th Street and S. Michigan Avenue, City of Joplin, Jasper County, Missouri. Motion by Mr. Brown, second by Mrs. Colbert-Kean to Deny Council Bill No. 2019-287. Voting in favor were Council Members: Brown, Colbert-Kean, Cortez, Monteleone, Reid Adams, Shaw, and Stinnett, 7. Nays: Lawson, 1. Absent: Stanley, 1. The Council Bill was read as Council Bill No. 2019-287. **Council Bill No. 2019-287 was Denied.**

Public Hearing for Council Bill No. 2019-288

Bruce Anderson, 620 McConnell, Joplin, representing Joplin Peace Tabernacle, appeared in favor of this item.

No one appeared in opposition to this item.

The Public Hearing was closed.

Mr. Cortez introduced Council Bill No.2019-288 - an ordinance providing the vacation for a public street located 150 feet of S. McCoy Ave., approximately 150 feet South of the intersection of S. McCoy Ave. and W. 4th St. in the City of Joplin, Jasper County, Missouri. Motion by Mr. Cortez, second by Mr. Stinnett that Council Bill No. 2019-288 be passed on First Reading and advanced to Second and Third Reading. Voting in favor were Council Members: Brown, Colbert-Kean, Cortez, Lawson, Monteleone, Reid Adams, Shaw, and Stinnett, 8. Nays: 0. Absent: Stanley, 1. The Council Bill was read as **Council Bill No. 2019-288.**

CONSENT AGENDA
Motion by Mr. Stinnett, second by Mr. Cortez to approve the Consent Agenda. Voting in favor were Council Members: Brown, Colbert-Kean, Cortez, Lawson, Monteleone, Reid Adams, Shaw and Stinnett, 8 Nays: 0. Absent: Stanley, 1.

Minutes of the December 16, 2019 City Council Meeting

RESOLUTIONS
Mr. Stinnett introduced Resolution No. 2020-001 - a resolution recognizing the creation of the 2020 One Joplin Complete Count Committee. Motion by Mr. Stinnett, second by Mr. Lawson to approve Resolution No. 2020-001. Voting in favor were Council Members: Brown, Colbert-Kean, Cortez, Lawson, Monteleone, Reid Adams, Shaw and Stinnett, 8 Nays: 0. Absent: Stanley, 1.

ORDINANCES – EMERGENCY
Mr. Lawson introduced Council Bill No. 2020-100 - an ordinance approving a Purchase Order to be issued to Tag Truck Enterprises of Missouri LLC in the amount of Three Hundred Eighty-Seven Thousand Nine Hundred Forty-Two and no/100 Dollars ($387,942.00) for the purchase of 2 dump trucks with snow plows as budgeted in the Annual Budget of the City of Joplin for the Fiscal Year 2019-2020; and containing an emergency clause. Motion by Mr. Lawson, second by Mr. Cortez that Council Bill No. 2020-100 be approved on an emergency basis. Voting in favor were Council Members: Brown, Colbert-Kean, Cortez, Lawson, Monteleone, Reid Adams, Shaw, and Stinnett, 8. Nays: 0. Absent, Stanley, 1. The Council Bill was declared adopted and entitled **Ordinance No. 2020-001.**

Mr. Cortez introduced Council Bill No. 2020-101 - an ordinance approving a Purchase Order to be issued to TYMCO in the amount of Two Hundred Six Thousand Seven Hundred Four and no/100 Dollars ($206,704.00) for the purchase of a Street Sweeper as budgeted in the Annual Budget of the City of Joplin for the Fiscal Year 2019-2020 and containing an emergency clause. Motion by Mr. Cortez, second by Mr. Brown that Council Bill No. 2020-101 be approved on an emergency basis. Voting in favor were Council Members: Brown, Colbert-Kean, Cortez, Lawson, Monteleone, Reid Adams, Shaw, and Stinnett, 8. Nays: 0. Absent, Stanley, 1. The Council Bill was declared adopted and entitled **Ordinance No. 2020-002**

Mr. Brown introduced Council Bill No. 2020-102 - an ordinance approving an agreement with Joplin Industrial Electric Co. in the not to exceed amount of Forty-Five Thousand Thirty and 07/100 Dollars ($45,030.07) for the relocation and installation of three generators; authorizing the City Manager to execute on behalf of the City; and containing an emergency clause. Motion by Mr. Brown, second by Mr. Monteleone that Council Bill No. 2020-102 be approved on an emergency basis. Voting in favor were Council Members: Brown, Colbert-Kean, Cortez, Lawson, Monteleone, Reid Adams, Shaw, and Stinnett, 8. Nays: 0. Absent, Stanley, 1. The Council Bill was declared adopted and entitled **Ordinance No. 2020-003**

ORDINANCES – FIRST READING

Mr. Stinnett introduced Council Bill No. 2019-289 - an ordinance establishing grades and accepting the Final Plat of Hal's Subdivision located at NW Corner of W 26th St. & S. Roosevelt Ave. in the City of Joplin, Jasper County, Missouri. Motion by Mr. Stinnett, second by Mr. Lawson to approve Council Bill No. 2019-289 on First Reading and advance to Second and Third Reading. Voting in favor were Council Members: Brown, Colbert-Kean, Cortez, Lawson, Monteleone, Reid Adams, Shaw, and Stinnett, 8. Nays: 0. Absent: Stanley, 1. The Council Bill was read as **Council Bill No. 2019-289**.

Mr. Monteleone introduced Council Bill No. 2020-600 - an ordinance authorizing the City of Joplin, Missouri ("City"), a municipal corporation, to enter into an agreement with Joplin Schools ("District"), a political subdivision and public school district of the State of Missouri, for the purpose of providing a school resource officer program between City and District; and authorizing the Interim City Manager to execute said agreements by and on behalf of the City of Joplin. Motion by Mr. Monteleone, second by Dr, Reid Adams to approve Council Bill No. 2020-600 on First Reading and advance to Second and Third Reading. Voting in favor were Council Members: Brown, Colbert-Kean, Cortez, Lawson, Monteleone, Reid Adams, Shaw, and Stinnett, 8. Nays: 0. Absent: Stanley, 1. The Council Bill was read as **Council Bill No. 2020-600**.

ORDINANCES – SECOND READING AND THIRD READING

UNFINISHED BUSINESS

NEW BUSINESS

News from Public Information Officer, Lynn Onstot

As part of a historic preservation effort, Phase II of the East Town Historic Resources Survey will be conducted in upcoming weeks. This will help the City's work in collecting important information about East Town's historical buildings, sites, and events. We invite citizens to learn more about the survey and its purpose during an Informational Meeting on Thursday, January 16. It will be held at 6 p.m. at the Empire Market on East 4th Street. Residents can join in the discussions about this project and the process that will be followed during the survey. Citizens are encouraged to bring

photos and stories they would like to share about the neighborhood to the meeting. City staff appreciates our citizens' input and look forward to meeting with them.

If citizens are interested in public safety, the Joplin Police Department has announced its upcoming Citizens Academy will start February 7. This free 14-week program provides an interactive and behind-the-scenes look at law enforcement. The Police Academy is held from 6 to 9 p.m. every Thursday through May 9. Topics include crime scene investigations, narcotics, child abuse, and traffic accidents. Officers will also focus on SWAT operations and equipment, use of force tactics, building clearing, DWI enforcement, and an introduction to the K9 unit. Interested persons should contact Officer Lacey Baxter of the Police Department. Applications are on the Department's website under the Events tab or can be picked up at the front desk of the Joplin Police Department at 303 E. 3rd Street.

The U.S. Census Bureau will be mailing questionnaires to all residents in the United States during the first quarter of 2020. To help with this major project, the Census Bureau is recruiting people to work on the 2020 Census. Interested individuals can apply for these temporary part-time positions by visiting their website at 2020census.gov/jobs and completing an online application. The process takes about 20 minutes and will include assessment questions about the applicant's education, work history, and other experiences.

For more information about these or other happenings at the City, check out our website at joplinmo.org .

There being no further business, the meeting adjourned at 7:10 p.m.

Respectfully,

Barbara J. Gollhofer, City Clerk

CITY OF JOPLIN
COUNCIL AGENDA ITEM

ITEM:
CB 2019-285-Utility Vacation

MEETING DATE:
January 6, 2020

ORIGINATING DEPARTMENT:
Planning, Development and Neighborhood Services

REVIEWED BY:
Director of Planning, Development & Neighborhood Services-Troy Bolander, Director of Finance-Leslie Haase, City Attorney- Peter Edwards, Interim City Manager- Daniel Pekarek.

SUMMARY REQUEST:
Case 041-19: Easement Vacation – A request to vacate a utility easement located at 2001 S. Wisconsin Ave. – Kevin Parker

BACKGROUND:
The purpose for this vacation request is to improve the ability to redevelop the site. Currently, the utility easement restricts the footprint of new development.

PLANNING & ZONING COMMISSION TESTIMONY:
Kevin Parker, 1115 Illinois Ave, Ste 1, Joplin, MO. One of the lots was purchased from the City of Joplin. The one below it was an R-3 lot that was used for the church across on Wisconsin. Due to the lots having a prior usage or purpose, there were some old utility easements that are no longer needed or vacated.

There are seven (7) duplexes that run parallel with the railroad tracks and one of the easements ran right through one of the duplexes. That easement stopped me from getting a building permit and just last week the city issued a building permit knowing that we submitted everything necessary to vacate it.

PUBLIC COMMENT:
None.

FUNDING SOURCE
These payments are included in the FY 2018-19 budget of the Community Planning Fund.

RECOMMENDATION:
Planning & Zoning Commission recommends approval, 6 in favor, 0 Nays, 1 Absent.

Staff recommends approval of Case 041-19.

ATTACHMENTS
CB 2019- 285, Staff Planning Report, P&Z Commission Minutes

CB 2019-285

Case 041-19: Easement Vacation – A request to vacate a utility easement located at 2001 S. Wisconsin Ave. – Kevin Parker

Kevin Parker, 1115 Illinois Ave, Ste 1, Joplin, MO. I bought the lots after the tornado, one of the lots was purchased from the City of Joplin. The one below it was an R-3 lot that was used for the church across the street. Due to the lots have a prior usage or purpose, there was some old utility easements that are no longer needed or vacated. Anderson Engineering and I have been working together to remove them and we have the corresponding letters that they are no longer needed or no longer needed in the future.

Mr. Ramsour stated that he drove by there and construction has started. How do these easements affect this property?

Mr. Parker stated that yes there is construction going on to build duplexes. There are seven (7) duplexes that run parallel with the railroad tracks and one of the easements ran right through one of the duplexes. That easement stopped me from getting a building permit and just last week the city issued a building permit knowing that we submitted everything necessary to vacate it.

Mr. Ramsour asked if the Commissioners had any questions for Mr. Parker. They did not.

Mr. Ramsour asked if there anyone in favor of this request? There was not. Is there was anyone against this request? There was not.

MRS. BRUCKNER-SEARS MOVED, SECONDED BY, MR. EASTMAN FOR CASE 041-19 BE FORWARDED TO THE CITY COUNCIL WITH THE RECOMMENDATION FOR APPROVAL. MOTION CARRIED, WITH MR. RAMSOUR, MR. DERMOTT, MRS. BRUCKNER-SEARS, MRS. KOELKEBECK, MRS. STEELE, AND MR. EASTMAN VOTING "AYE". (6 IN FAVOR, 0 NAYS, 1 ABSENT).

Z&P Meeting: December 9, 2019
City Council Meeting: January 6, 2019

STAFF PLANNING REPORT
Vacation

CASE 041-19 A request for the vacation of approximately 90 feet of a 10-foot-wide utility easement, and approximately 185 feet of a 10-foot-wide utility easement.

APPLICANT Kevin Parker

REPRESENTATIVE Micah Souder

LOCATION A utility easement running East/West located in the 2300 block of the East side of S. Wisconsin Ave.

EXISTING CONDITIONS

Easement Type(s)	Easement Size
Utility Easement	Approximately 10' x 90'
Utility Easement	Approximately 10' x 180'

REASON FOR VACATION

For the redevelopment on the applicant's property. Current easement prevents the footprint of any proposed development from being located at present recorded location.

UTILITIES CURRENTLY LOCATED IN THE EASEMENT?

No active connection. Rerouting of utilities is not required to maintain current services to adjoining properties.

UTILITIES PLANNED TO LOCATE IN THE EASEMENT?

No plans for new utilities to be located in the easement.

DISCUSSION

The purpose for this vacation request is to improve the ability to redevelop the site. Currently, the utility easement restricts the footprint of new development. The easement is no longer in use to serve private property or to extend public utilities.

Staff recommends approval of Case 041-19.

ENCLOSURES

- Application
- Map

CITY OF JOPLIN

APPLICATION FOR VACATION OF STREET OR RESERVATION

Return Form to:
Planning / Community Development Specialist.
Joplin City Hall
602 South Main Street
Joplin, Missouri 64801
417-624-0820 Ext. 511
FAX 417-625-4738

For Office Use Only

Case No.: 041-19
Filing Fee: $500.00
Date Advertised: 11-24-19
Date Notices Sent 11-22-19
Public Hearing Date: 12-9-19

I. Applicant Name: Kevin Parker Phone: 417-624-5552

If more than one property applicant, please submit additional names, address and phone numbers on attached sheet(s)

Address: 1115 Illinois Avenue Suite 1 Joplin, MO Zip: 64801

II. Type of vacation requested (check one):

Street Vacation_____

Alley Vacation_____

Utility vacation X

Other (Please specify)_____

III. Legal Description of area requested to be vacated: See attached exhibit and description

IV. Please indicate below the extent to which the following standards are met, in the applicant's opinion.

1. Private rights will not be injured or endangered by the vacation. No

2. The vacation will not cause the public to suffer a loss or inconvenience. No

3. In justice to the applicant(s) the vacation should be granted. Parker Development, LLC

V. Required Attachments:

1. Affidavit(s) from each owner of land adjoining said area that is proposed to be vacated, whom are not listed as an applicant, indicating their consent to the vacation.

2. Survey or such other drawing acceptable to the Planning / Community Development Manager depicting the street, alley or public reservation sought to be vacated and the properties and property ownerships surrounding said street, alley or public reservation.

3. Affidavit(s) from the following private utility companies indicating their consent to vacate the easement. The following private companies must be contacted and consent to the vacation before the Public Hearing can take place.

a.) MGE Missouri Gas Energy	(800) 582-1234
b.) Empire District Electric Company	(417) 624-0300
c.) Cable One	(417) 624-6340
d.) MO American Water Company	(800) 256-6426
e.) AT&T	(800) 464-7928
f.) Republic Services (Trash)	(800) 431-1507

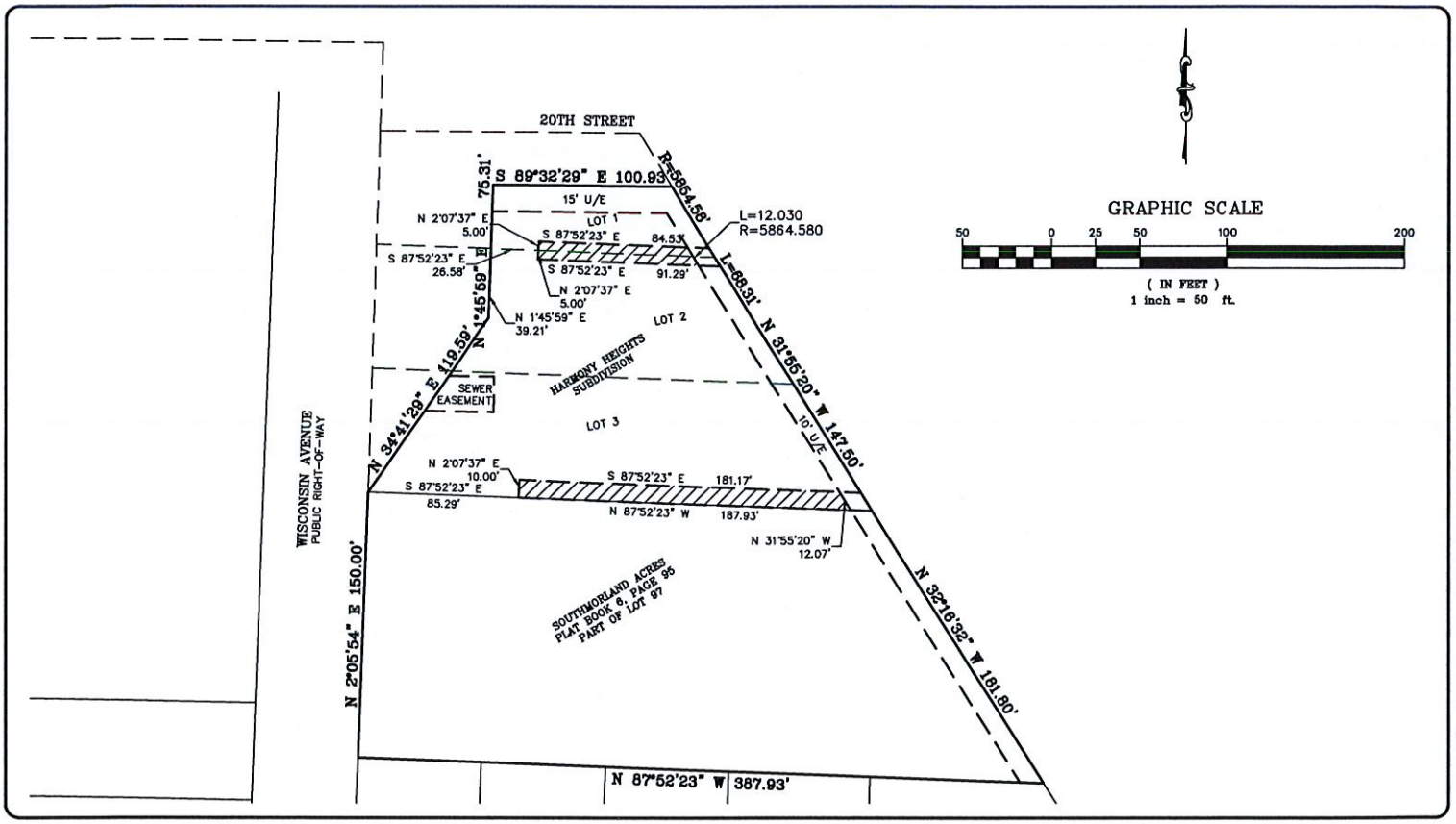

ANDERSON ENGINEERING
EMPLOYEE OWNED
ENGINEERS • SURVEYORS • LABORATORIES • DRILLING • GIS

811 E. 3RD STREET
JOPLIN, MISSOURI 64801
PHONE (417) 782-7399

MONTANA CROSSING
PROPOSED UTILITY EASEMENT VACATION SKETCH
JOPLIN, JASPER COUNTY, MISSOURI

DRAWN BY: MNS	FIELD BY: –
DATE: 9-24-19	FIELD BK: –
CLIENT NO: –	DRAWING NUMBER: –

Case 041-19: 2001 S. Wisconsin Ave. - Easement Vacation

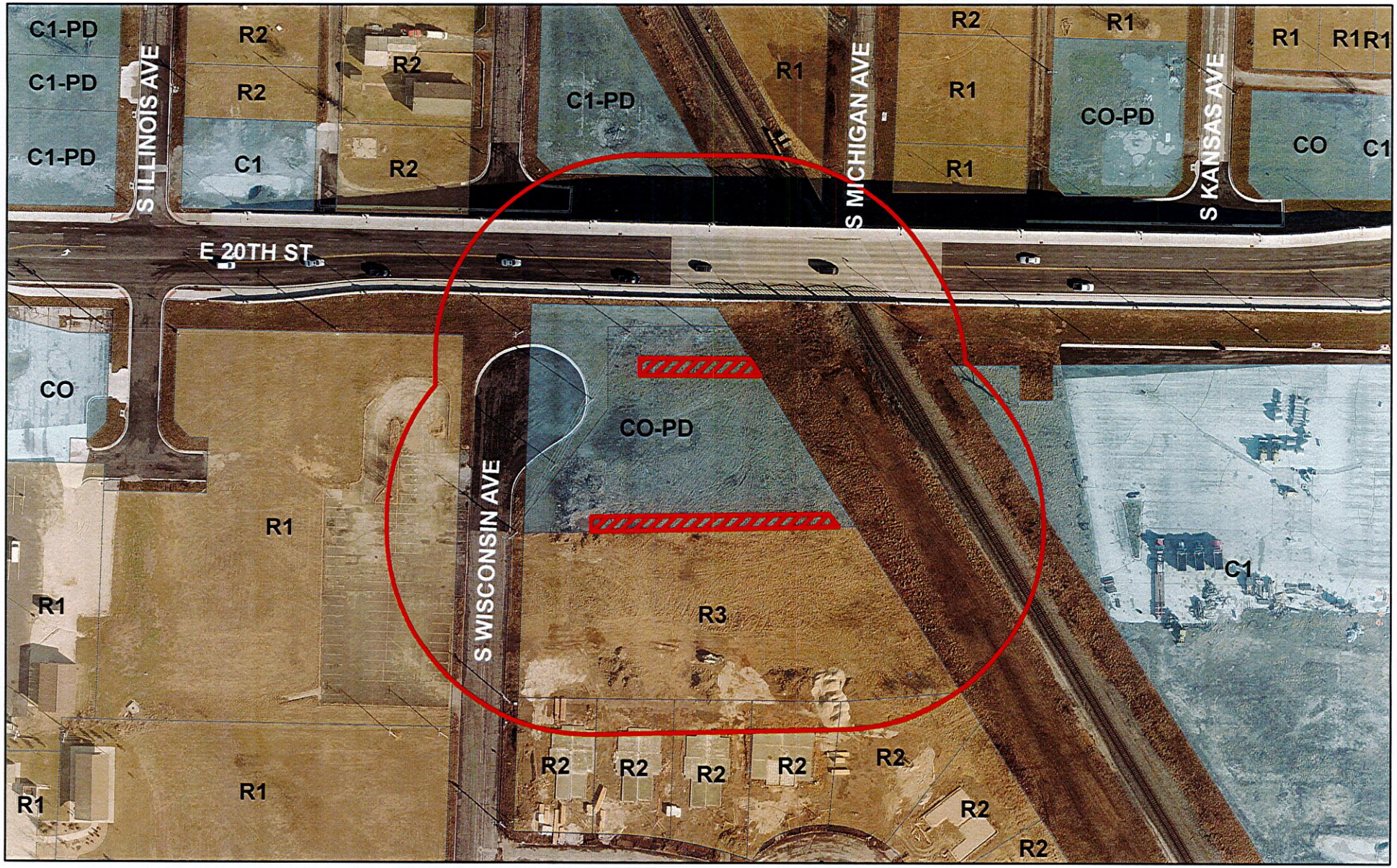

Case 041-19: Easement Vacation – A request to vacate a 10 foot by 90 foot utility easement and a 10 foot by 180 foot utility easement located at 2001 S. Wisconsin Ave. – Kevin Parker

0 62.5 125 250 375 500 Feet

N

P & Z Case 041-19
Kevin Parker
(P & Z Recommended Approval)

COUNCIL BILL NO. 2019-285 ORDINANCE NO.

AN ORDINANCE providing to vacate approximately 90 feet of a 10-foot-wide utility easement and approximately 185 feet of a 10-foot-wide utility easement running East/West located in the 2300 block of the East side of S. Wisconsin Ave.

BE IT ORDAINED BY THE COUNCIL OF THE CITY OF JOPLIN, MISSOURI, as follows:

Section 1. That all that part of approximately 90 feet of a 10-foot-wide utility easement, and approximately 185 feet of a 10-foot-wide utility easement running East/West located in the 2300 block of the East side of S. Wisconsin Ave. in the City of Joplin, Jasper County, Missouri described as follows is hereby vacated, conveyed, relinquished, and reverted to the owners of the abutting lots and land:

As part of a platted utility easement as shown on Lots 1 and 2 of Harmony Heights Subdivision, a subdivision of land in the City of Joplin, as shown in Plat Book 7, Page 105 in the Recorder of Deeds Office in Jasper County, Missouri, described as follows: commencing at the Southwest Corner of Lot 3 in said Harmony Heights Addition; thence N34°41'29"E along East right-of-way of Wisconsin Avenue as established in Book 2398, Page 401, 119.59 feet; thence N01°54'59"E along said right-of-way, 39.21 feet to a point on the common line of Lots 1 and 2 in said Harmony Heights Subdivision; thence S87°52'23"E along said lot line, 26.58 feet to the point of beginning of the easement to be vacated ; thence N02°07'37"E, 5.00 feet; thence S87°52'23"E, 84.65 feet; thence 12.03 feet along an easement line on a non-tangent curve to the left, having a radius of 5864.58 feet and a chord bearing S31°38'49"E, 12.03 feet; thence N87°52'23"W, 91.34 feet; thence N02°07'37"E, 5.00 feet to the point of beginning; contains 880 square feet, more or less, bearings are based on the Missouri Coordinate System of 1983, West Zone; and part of a platted utility easement as shown on Lot 3 of Harmony Heights Subdivision, a subdivision of land in the City of Joplin, as shown in Plat Book 7, Page 105 in the Recorder of Deeds Office in Jasper County, Missouri, described as follows: commencing at the Southwest Corner of Lot 3 of Harmony Heights Addition; thence s87°52'23"E along the South line of said Lot 3, 85.29 feet to the point of beginning of the easement to be vacated; thence N02°07'37"E, 10.00 feet; thence S87°52'23"E, 181.17 feet; thence S31°55'20"E along an easement line, 12.07 feet to a point on the south line of said lot 3; thence N87°52'23"W, 187.93 feet to the point of beginning; contains 1845 square feet, more or less; bearings are based on the Missouri Coordinate System of 1983, West Zone.

PASSED BY THE COUNCIL OF THE CITY OF JOPLIN, MISSOURI, this _____ day of _____, 2019, by a vote of _____.

_____
ATTEST: Gary L. Shaw, Mayor

_____
Barbara J. Gollhofer, City Clerk

APPROVED AS TO FORM:

_____

Peter C. Edwards, City Attorney

CITY OF JOPLIN
COUNCIL AGENDA ITEM

ITEM:
CB 2019-286-Utility Vacation

MEETING DATE:
January 6, 2020

ORIGINATING DEPARTMENT:
Planning, Development and Neighborhood Services

REVIEWED BY:
Director of Planning, Development & Neighborhood Services-Troy Bolander, Director of Finance-Leslie Haase, City Attorney- Peter Edwards, Interim City Manager- Daniel Pekarek.

SUMMARY REQUEST:
Case 042-19: Easement Vacation – A request to vacate a utility easement located at the Southwest corner of W. 26th St. & S. McCoy Ave. – Parker Development, LLC

BACKGROUND:
The Memorial Hills senior affordable housing development has already been constructed on the site, and subsequent surveys have shown unused easements on the property.

PLANNING & ZONING COMMISSION TESTIMONY:
Kevin Parker, 1115 Illinois Ave, Ste 1, Joplin, MO. Mr. Parker stated that there is an easement through the building where Memorial Hills Senior Affordable Housing building now sits. We purchased this property from the Joplin Redevelopment Corporation (JRC). There are about nine (9) parcels in total and we thought all of the easements were all vacated.

They are not needed any longer and all utility companies have been notified and paperwork is in order.

PUBLIC COMMENT;
None.

FUNDING SOURCE
These payments are included in the FY 2018-19 budget of the Community Planning Fund.

RECOMMENDATION:
Planning & Zoning Commission recommends approval
Staff recommends approval of Case 042-19.

ATTACHMENTS
CB 2019- 286, Staff Planning Report, P&Z Commission Minutes

CB 2019-286

Case 042-19: Easement Vacation – A request to vacate a utility easement located at the Southwest corner of W. 26th St. & S. McCoy Ave. – Parker Development, LLC

Kevin Parker, 1115 Illinois Ave, Ste 1, Joplin, MO. Mr. Parker stated that there is an easement through the building where Memorial Hills Senior Affordable Housing building now sits. We purchased this property from the Joplin Redevelopment Corporation (JRC). There are about nine (9) parcels in total and we thought all of the easements were all vacated. We moved forward with the survey, and it came up with additional ones. They are old easements and they were necessary before the tornado when the property was used for a different purpose. They are not needed any longer and all utility companies have been notified and paperwork is in order.

Mr. Eastman stated he did not have a question but a comment. Kevin, very proud of what you have done there, an improvement to that area.

Mr. Parker stated that the property is completely full. There are 54 units, and all were full within 60 days. It is affordable and the residents have really enjoyed them.

Mr. Ramsour asked if there anyone in favor of this request? There was not. Is there was anyone against this request? There was not.

MRS. KOELKEBECK MOVED, SECONDED BY, MRS. STEELE FOR CASE 042-19 BE FORWARDED TO THE CITY COUNCIL WITH THE RECOMMENDATION FOR APPROVAL. MOTION CARRIED, WITH MR. RAMSOUR, MR. DERMOTT, MRS. BRUCKNER-SEARS, MRS. KOELKEBECK, MRS. STEELE, AND MR. EASTMAN VOTING "AYE". (6 IN FAVOR, 0 NAYS, 1 ABSENT).

Z&P Meeting: December 9, 2019
City Council Meeting: January 6, 2019

STAFF PLANNING REPORT
Vacation

CASE 042-19 A request for the vacation of approximately 440 feet of a 20-foot-wide utility easement, and 115 feet of a 15-foot-wide storm sewer and utility easement.

APPLICANT Kevin Parker

REPRESENTATIVE Micah Souder

LOCATION A utility easement mostly running North/South and a storm sewer and utility easement running East/West located in the 1700 block of the South side of W 26th St.

EXISTING CONDITIONS

Easement Type(s)	Easement Size
Utility Easement	Approximately 20' x 440'
Storm Sewer & Utility Easement	15' x 115'

REASON FOR VACATION

For the redevelopment on the applicant's property. Current easement prevents the footprint of any proposed development from being located at present recorded location.

UTILITIES CURRENTLY LOCATED IN THE EASEMENT?

No active connection. Rerouting of utilities is not required to maintain current services to adjoining properties.

UTILITIES PLANNED TO LOCATE IN THE EASEMENT?

No plans for new utilities to be located in the easement.

DISCUSSION

The purpose for this vacation request is clean up the easements through the site. The Memorial Hills senior affordable housing development has already been constructed on the site, and subsequent surveys have shown unused easements on the property.

Staff recommends approval of Case 042-19.

ENCLOSURES

- Application
- Map

CITY OF JOPLIN

APPLICATION FOR VACATION OF STREET OR RESERVATION

Return Form to:
Planning / Community Development Specialist.
Joplin City Hall
602 South Main Street
Joplin, Missouri 64801
417-624-0820 Ext. 511
FAX 417-625-4738

For Office Use Only

Case No.: 042-19
Filing Fee: $500.00
Date Advertised: 11-24-19
Date Notices Sent 11-22-19
Public Hearing Date: 12-9-19

I. Applicant Name: Kevin Parker Phone: 417-624-5552

If more than one property applicant, please submit additional names, address and phone numbers on attached sheet(s)

Address: 1115 Illinois Avenue Suite 1 Joplin, MO Zip: 64801

II. Type of vacation requested (check one):

Street Vacation_____

Alley Vacation_____

Utility vacation X

Other (Please specify)_____

III. Legal Description of area requested to be vacated: See attached exhibit and description

IV. Please indicate below the extent to which the following standards are met, in the applicant's opinion.

1. Private rights will not be injured or endangered by the vacation. No

2. The vacation will not cause the public to suffer a loss or inconvenience. No

3. In justice to the applicant(s) the vacation should be granted. Memorial Hills, LP

V. Required Attachments:

1. Affidavit(s) from each owner of land adjoining said area that is proposed to be vacated, whom are not listed as an applicant, indicating their consent to the vacation.

2. Survey or such other drawing acceptable to the Planning / Community Development Manager depicting the street, alley or public reservation sought to be vacated and the properties and property ownerships surrounding said street, alley or public reservation.

3. Affidavit(s) from the following private utility companies indicating their consent to vacate the easement. The following private companies must be contacted and consent to the vacation before the Public Hearing can take place.

a.) MGE Missouri Gas Energy	(800) 582-1234
b.) Empire District Electric Company	(417) 624-0300
c.) Cable One	(417) 624-6340
d.) MO American Water Company	(800) 256-6426
e.) AT&T	(800) 464-7928
f.) Republic Services (Trash)	(800) 431-1507

Case 042-19: Southwest corner of W. 26th St. and S. McCoy Ave. - Easement Vacation

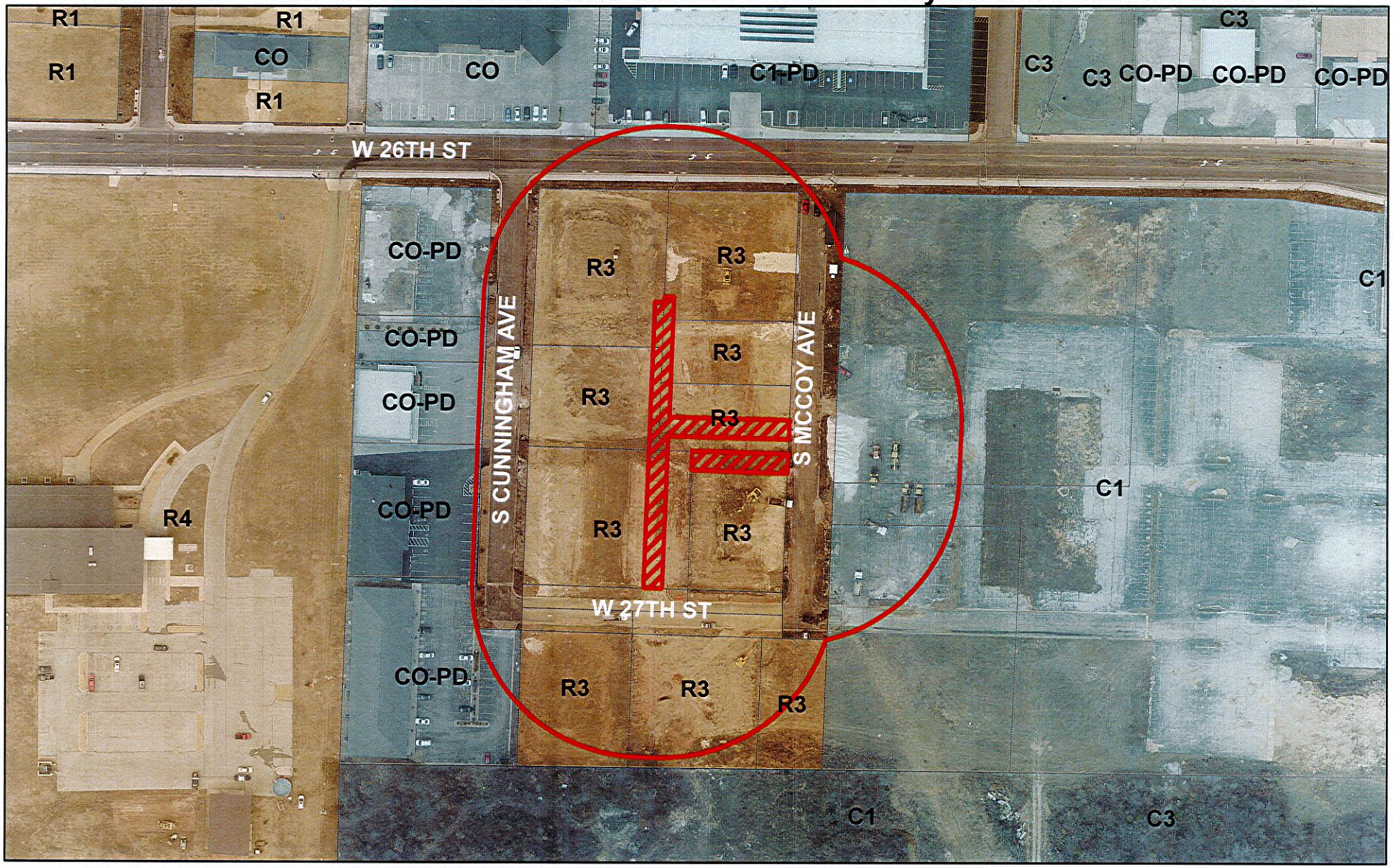

Case 042-19: Southwest corner of W. 26th St. and S. McCoy Ave. - A request to vacate a 20 foot by 430 foot utility easement and a 15 foot by 115 foot utility and storm sewer easement - Kevin Parker

0 62.5 125 250 375 500 Feet

N

P & Z Case 042-19
Kevin Parker
(P & Z Recommended Approval)

COUNCIL BILL NO. 2019-286 ORDINANCE NO.

AN ORDINANCE providing for the vacation of approximately 440 feet of a 20-foot-wide utility easement, and 115 feet of a 15-foot-wide storm sewer and public utility easement located in the 1700 block of the South side of W 26th Street in the City of Joplin, Jasper County, Missouri.

BE IT ORDAINED BY THE COUNCIL OF THE CITY OF JOPLIN, MISSOURI, as follows:

Section 1. That part of approximately 440 feet of a 20-foot-wide utility easement, and 115 feet of a 15-foot-wide storm sewer easement located in the 1700 block of the South side of W 26th Street in the City of Joplin, Jasper County, Missouri, described as follows is here by vacated, conveyed, relinquished, and reverted to the owners of the abutting lots and land:

As part of a platted 20 feet utility easement as shown on Richard J. Joseph's Subdivision, a subdivision of land in the City of Joplin, Missouri, as shown in Plat Book 11, Page 63 in the Recorder of Deeds Office in Jasper County, Missouri, described as follows: commencing at the Northwest corner of the Northeast Quarter of the Southeast Quarter of Section 16, Township 27 North, Range 33 West, Jasper County, Missouri; thence S01°52'41"W, 40.01 feet to the South right-of-way of 26th Street; thence along said South right-of-way, S89°21'31"E, 320.00 feet to a point on the North line of lot 2 in said Richard J. Joseph's Subdivision and the West line of the utility easement; thence S01°56'04"W along the West line of said easement, 114.78 feet to the point of beginning; thence S88°03'56"E, 9.32 feet; thence N01°56'04"E 7.17 feet; thence S88°03'56"E, 10.68 feet to a point on the East line of said easement; thence along said easement the next eight courses; S01°56'04"W, 132.80 feet; thence S89°21'48"E, 129.90 feet to a point on the East line of lot 4 in said Richard J. Joseph's Subdivision, thence S01°57'29"W, 20.01 feet; thence N89°21'48"W, 129.89 feet, thence S01°56'04"W, 166.95 feet; thence N88°30'31"W, 20.00 feet; thence N01°56'04"E, 312.74 feet to the point of beginning; containing 8929 square feet, more or less; bearings based on the Missouri Coordinate System of 1983, West Zone; and a 15 feet storm sewer and utility easement as shown in Book 1643, page 1700 in the Recorder of Deeds Office in Jasper County, Missouri, being part of an un-numbered lot in Richard J. Joseph's Subdivision to the City of Joplin, Missouri, described as follows: commencing at the Northwest corner of the Northeast Quarter of the Southeast Quarter of Section 16, Township 27 North, Range 33 West, Jasper County, Missouri; thence S01°52'41"W, 40.01 feet to the South right-of-way of 26th Street; thence along said South right-of-way, s89°21'31"E, 470.00 feet to the Northeast corner of lot 3 in said Richard J. Joseph's Subdivision; thence S01°57'29"W along the East lines of lot 3 and lot 4 in said subdivision, 279.76 feet to the Southeast corner of said lot 4, being the point of beginning; thence continuing South 01°57'29"W along the East line of said Richard J. Joseph's Subdivision, 15.00 feet; thence N88°30'31"W, 115.00 feet; thence N01°57'29"E, 15.00 feet to a point on the South line of said lot 4; thence S88°30'31"E along the South line of said lot 4, 115.00 feet to the point of beginning; containing 1725 square feet, more or less; bearings based on the Missouri Coordinate System of 1983, West Zone.

PASSED BY THE COUNCIL OF THE CITY OF JOPLIN, MISSOURI, this _____ day of _____, 2019, by a vote of _____.

_____
ATTEST: Gary L. Shaw, Mayor

_____

Barbara J. Gollhofer, City Clerk

APPROVED AS TO FORM:

_____

Peter C. Edwards, City Attorney

CITY OF JOPLIN
COUNCIL AGENDA ITEM

ITEM:
CB 2019-288-Utility Vacation

MEETING DATE:
January 6, 2020

ORIGINATING DEPARTMENT:
Planning, Development and Neighborhood Services

REVIEWED BY:
Director of Planning, Development & Neighborhood Services-Troy Bolander, Director of Finance-Leslie Haase, City Attorney- Peter Edwards, Interim City Manager- Daniel Pekarek.

SUMMARY REQUEST:
Case 044-19: Street Vacation – A request to vacate 150 feet of S. McCoy Ave., approximately 150 feet South of the intersection of S. McCoy Ave. and W. 4th St. – Joplin Peace Tabernacle

BACKGROUND:
The purpose for this vacation request is allow the applicant to consolidate their land. Currently, the right-of-way is not being used as a street, is not paved, and would be a dead-end reaching no destinations.

PLANNING & ZONING COMMISSION TESTIMONY:
Bruce Anderson, 620 McConnell, Joplin, MO. He is representing Joplin Peace Tabernacle for this request to vacate a strip of land that is about 150 feet south of the alley parallel to 4th St. The church owns property to the east of this parcel and to the west. They own parcels on three sides and 5th Street is partially vacated. The church does have approval from all the utility companies for this vacation.

PUBLIC COMMENT;
None.

FUNDING SOURCE
These payments are included in the FY 2018-19 budget of the Community Planning Fund.

RECOMMENDATION:
Planning & Zoning Commission recommends approval
Staff recommends approval of Case 044-19.

ATTACHMENTS
CB 2019- 288, Staff Planning Report, P&Z Commission Minutes

CB 2019-288

Case 044-19: Street Vacation – A request to vacate 150 feet of S. McCoy Ave., approximately 150 feet South of the intersection of S. McCoy Ave. and W. 4th St. – Joplin Peace Tabernacle

Bruce Anderson, 620 McConnell, Joplin, MO. He is representing Joplin Peace Tabernacle for this request to vacate a strip of land that is about 150 feet south of the alley parallel to 4th St. The church owns property to the east of this parcel and to the west. They own parcels on three sides and 5th Street is partially vacated. The church does have approval from all the utility companies for this vacation.

Mr. Ramsour asked if there were any future plans, and that they certainly do not have to be shared with us.

Mr. Anderson stated that there wasn't anything at this time.

Mr. Ramsour asked if there was anyone that would like to speak in favor of this case? There was not. Mr. Ramsour asked if there was anyone who would like to speak in opposition to this case? There was not.

MRS. STEELE MOVED, SECONDED BY MR. DERMOTT FOR CASE 044-19 BE FORWARDED TO THE CITY COUNCIL WITH THE RECOMMENDATION FOR APPROVAL. MOTION CARRIED, MRS. KOELKEBECK, MRS. STEELE, MR. RAMSOUR, MR. DERMOTT, MR. EASTMAN, AND MR. MCCULLOUGH, VOTING "AYE. (6 IN FAVOR, 0 NAYS, 1 ABSENT).

Z&P Meeting: December 9, 2019
City Council Meeting: January 6, 2019

STAFF PLANNING REPORT
Vacation

CASE 044-19 A request to vacate 150 feet of S. McCoy Ave

APPLICANT Joplin Peace Tabernacle

REPRESENTATIVE Bruce Anderson

LOCATION Approximately 150 feet South of the intersection of S. McCoy Ave. and W. 4th St.

EXISTING CONDITIONS

Easement Type(s)	Easement Size
Street Right-of-Way	Approximately 50' x 150'

REASON FOR VACATION

To consolidate the applicant's properties. The applicant owns the property to the East and West, and acquired a small portion to the South with the vacation of 5th St. in 1982.

UTILITIES CURRENTLY LOCATED IN THE RIGHT-OF-WAY?

Rerouting of utilities is not required to maintain current services to adjoining properties.

UTILITIES PLANNED TO LOCATE IN THE RIGHT-OF-WAY?

No plans for new utilities to be located in the right-of-way.

DISCUSSION

The purpose for this vacation request is allow the applicant to consolidate their land. Currently, the right-of-way is not being used as a street, is not paved, and would be a dead-end reaching no destinations.

Staff recommends approval of Case 044-19 with a savings clause to allow for utilities to access and maintain their infrastructure.

ENCLOSURES

- Application
- Map

RECEIVED
11-15-19

CITY OF JOPLIN

APPLICATION FOR VACATION OF STREET OR RESERVATION

Return Form and Attachments to:
Planning / Community Development Specialist
Joplin City Hall
602 South Main Street
Joplin, Missouri 64801
417-624-0820 Ext. 511
FAX 417-625-4738

For Office Use Only

Case No.: 044-19
Filing Fee: $500.00
Date Advertised: 11-24-19
Date Notices Sent 11-22-19
Public Hearing Date: 12-9-19

I. Applicant Name: JOPLIN PEACE TABERNACLE Phone:

If more than one property applicant, please submit additional names, address and phone numbers on attached sheet(s)

Address: 416 S. MAIDEN LANE, JOPLIN, MO Zip: 64801

II. Type of vacation requested (check one):

Street Vacation X

Alley Vacation

Utility vacation

Other (Please specify)

III. Please indicate below the extent to which the following standards are met, in the applicant's opinion.

1. Private rights will not be injured or endangered by the vacation. NO

2. The vacation will not cause the public to suffer a loss or inconvenience. NO

3. In justice to the applicant(s) the vacation should be granted. Yes.

IV. Required Attachments:

1. Legal description of the street, alley, or utility easement to be vacated from a deed of record or certified survey. Digital copies are acceptable. Must be legible.

2. Survey or such other drawing acceptable to the Planning / Community Development Manager depicting the street, alley or public reservation sought to be vacated and the properties and property ownerships surrounding said street, alley or public reservation.

3. Affidavit(s) from each owner of land adjoining said area that is proposed to be vacated, whom are not listed as an applicant, indicating their consent to the vacation.

4. Affidavit(s) from the following private utility companies indicating their consent to vacate the easement. The following private companies must be contacted and consent to the vacation before the Public Hearing can take place.

Utility	Contact	Email	Phone
AT&T	**Kenny Kenworthy**	**kk7429@att.com**	**417-625-8092**
Missouri American Water	Andrew Holderness	andrew.holderness@amwater.com	417-623-0676 x1009
Liberty Utilities (Power)	**Jeff Lebeda**	**jeff.lebeda@libertyutilities.com**	**417-625-6159**
Republic Services (Trash)			(800) 431-1507
Cable One/Sparklight	**Keri Bledsoe**	**keri.bledsoe@sparklight.biz**	
Spire Energy (Gas)*	Ken Stegall	ken.stegall@spireenergy.com	
Spire Energy (Gas)*	**Mandy Butkovich**	**mandy.butkovich@spireenergy.com**	**816-472-3767**

*Must contact BOTH contacts at Spire Energy.

10-15-19

FRANK BUCHANAN
LEAD PASTOR

Signature

Date

Case 044-19: Approximately 150 feet South of the intersection of S. McCoy Ave. and W. 4th St. Street Vacation

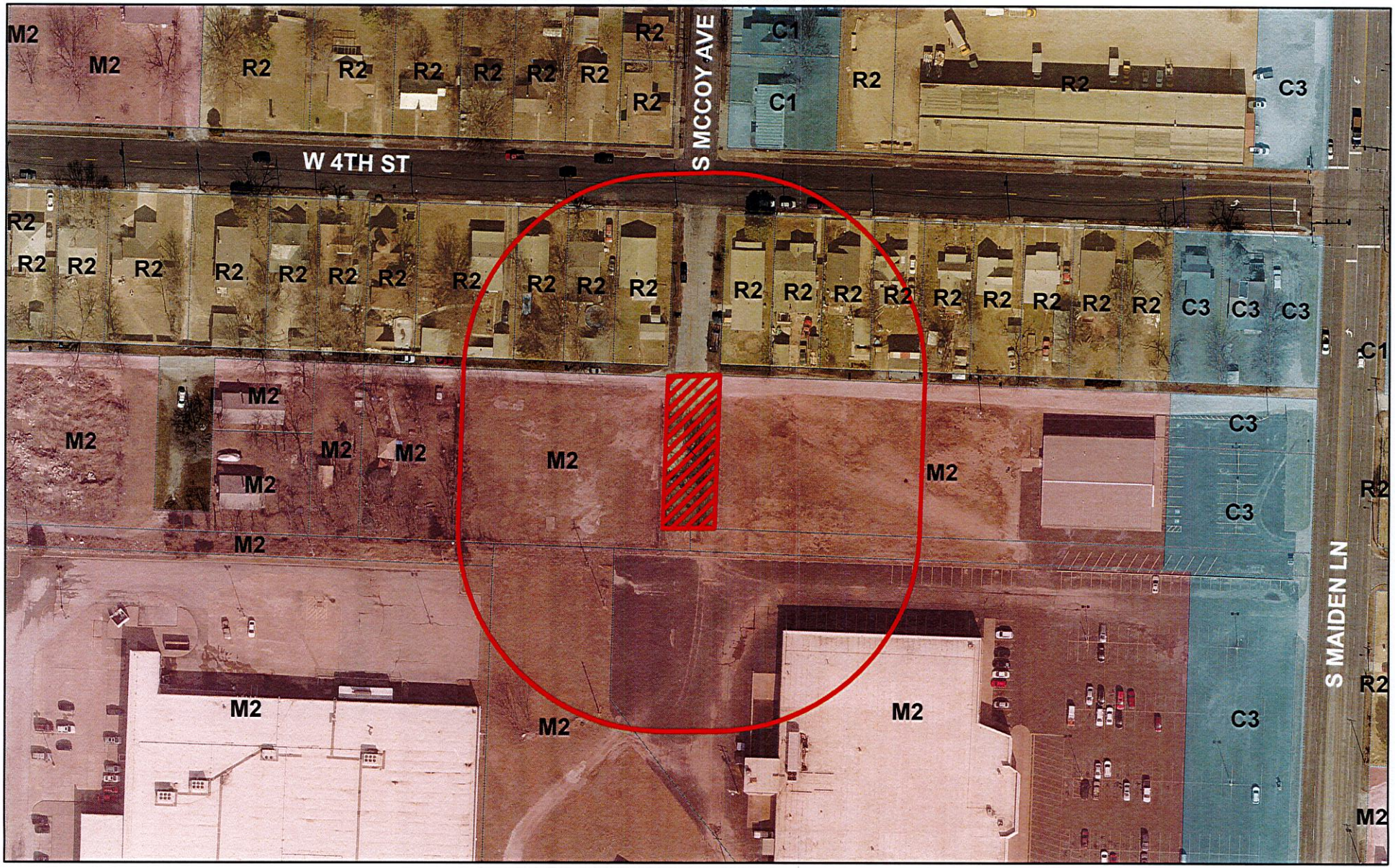

Case 044-19: Street Vacation – A request to vacate 150 feet of S. McCoy Ave., approximately 150 feet South of the intersection of S. McCoy Ave. and W. 4th St. – Joplin Peace Tabernacle

N

0 50 100 200 300 400 Feet

P & Z Case 044-19
Joplin Peace Tabernacle
(P & Z Recommended Approval)

COUNCIL BILL NO. 2019-288 ORDINANCE NO.

AN ORDINANCE providing the vacation for a public street located 150 feet of S. McCoy Ave., approximately 150 feet South of the intersection of S. McCoy Ave. and W. 4th St. in the City of Joplin, Jasper County, Missouri.

BE IT ORDAINED BY THE COUNCIL OF THE CITY OF JOPLIN, MISSOURI, as follows:

Section 1. That part of a public street right-of-way being located approximately 150 feet of the intersection of South McCoy Ave. and West 4th St. in the City of Joplin, Jasper County, Missouri. described as follows and hereby vacated, conveyed, relinquished, and reverted to the owners of the abutting lots and land:

> Commencing at the Southeast Corner of Lot Numbered 25 in the Continental Addition in the City of Joplin, Jasper County, Missouri; thence S01°57'45"W 20.00 feet; thence N87°58'29"W 540.00 feet to the point of beginning said point being 10.00 feet South of the Northwest Corner of Parcel Numbered 62 of Miscellaneous Tract Numbered 13 in Section 4, Township 27, Range 33, in the City of Joplin, Jasper County, Missouri; thence S01°57'21"W along the West line of said Parcel Numbered 62, 150.00 feet to the Southwest Corner of said Parcel Numbered 62; thence N87°58'35"W 50.00 feet to the Southeast Corner of Parcel Numbered 64 of Miscellaneous Tract Numbered 13 in Section 4, Township 27, Range 33, in the City of Joplin, Jasper County, Missouri; thence N01°57'35"E along the East line of said Parcel Numbered 64 150.00 feet to a point 10.00 feet South of the Northeast Corner of said Parcel Numbered 64, thence S87°58'29"E 50.00 feet to the Point of Beginning; together with all of the North one-half of vacated 5th street adjoining the South line of said vacated McCoy Avenue all in Section 4, Township 27, Range 33, in the City of Joplin, Jasper County, Missouri, being subject to all easements, rights-of-way, and reservations of record, on property.

Section 2. That this vacation of the portion of the street easement hereby vacated shall not affect or derogate from the existing rights of way or other easements of public utility companies now having installations in the portion of the street hereby vacated. Such utility companies shall have the right to maintain and repair any such installations now on the vacated portion of said street and shall be subject to the rights of the city of Joplin for sewer construction and maintenance.

PASSED BY THE COUNCIL OF THE CITY OF JOPLIN, MISSOURI, this _____ day of _____, 2019, by a vote of _____.

_____
Gary L. Shaw, Mayor

ATTEST:

_____
Barbara J. Gollhofer, City Clerk

APPROVED AS TO FORM:

_____
Peter C. Edwards, City Attorney

CITY OF JOPLIN
COUNCIL AGENDA ITEM

ITEM:
CB 2019-289 – Final Plat Review, Hal's Subdivision.

MEETING DATE:
January 6, 2020

ORIGINATING DEPARTMENT:
Planning, Development and Neighborhood Services

REVIEWED BY:
Director of Planning, Development & Neighborhood Services-Troy Bolander, Director of Finance-Leslie Haase, City Attorney- Peter Edwards, Interim City Manager- Daniel Pekarek.

SUMMARY REQUEST:
Case 046-19: Final Plat Review – A request to review the Final Plat of Hal's Subdivision located on the Northwest corner of the intersection of W. 26th St. and S. Roosevelt Ave. – Joel Standeford

BACKGROUND:
The final plat approval is for Hal's Subdivision, a replat of lots 1-3 of Schoolview Estates Third Addition. This subdivision will be 8 lots, zoned R-1 Single-family Residential. Lots 7 and 8 will have a shared access easement to ensure adequate room for access off of McKinley Ave. The applicant has also opted for a stormwater buyout in order to meet the stormwater requirements.

PLANNING & ZONING COMMISSION TESTIMONY:
Mr. Stanton stated this was the final plat for Hal's Subdivision on 26th Street and Roosevelt Avenue. . It does meet all of the Subdivision Regulations in our code.

They do plan to subdivide into eight (8) distinct parcels. There will be 5 parcels on 26th Street, one will have frontage on Roosevelt, and two (2) will have frontage on the S. McKinley Avenue cul-de-sac. There is a sewer extension planned. The current sewer runs on the northern part of the parcel.

PUBLIC COMMENT;
None.

FUNDING SOURCE
These payments are included in the FY 2018-19 budget of the Community Planning Fund.

RECOMMENDATION:
Staff recommends approval of Case 046-19.
Planning and Zoning Commission approved 6 in Favor, 0 Nays, 1 Absent

ATTACHMENTS:
CB 2019-289, Planning Report, Plat Commission Minutes.

Case 045-19: Preliminary Plat Review – A request to review the Preliminary Plat of Hal's Subdivision located on the Northwest corner of the intersection of W. 26th St. and S. Roosevelt Ave. – Joel Standeford

Mr. Stanton stated this first would be a review of the preliminary plat. Staff reviewed this preliminary plat with the Public Works Department and the Engineering Department and found that it has met requirements of our subdivision code. They do plan to subdivide into eight (8) distinct parcels. There will be 5 parcels on 26th Street, one will have frontage on Roosevelt, and two (2) will have frontage on the S. McKinley Avenue cul-de-sac. There is a sewer extension planned. The current sewer runs on the northern part of the parcel, when subdivided they will extend it down Roosevelt Avenue to meet those parcels on 26th Street. They opted for a stormwater buy out instead of doing on site retention/detention.

Mr. Ramsour asked if Commissioners had any questions? They did not.

MR. EASTMAN MOVED, SECONDED BY MR. DERMOTT FOR CASE 045-19 BE APPROVED. MOTION CARRIED, MRS. KOELKEBECK, MRS. STEELE, MR. RAMSOUR, MR. DERMOTT, MR. EASTMAN, AND MR. MCCULLOUGH, VOTING "AYE. (6 IN FAVOR, 0 NAYS, 1 ABSENT).

CB 2019-289

Case 046-19: Final Plat Review – A request to review the Final Plat of Hal's Subdivision located on the Northwest corner of the intersection of W. 26th St. and S. Roosevelt Ave. – Joel Standeford

Mr. Stanton stated this was the final plat for Hal's Subdivision on 26th Street and Roosevelt Avenue. This one will go to City Council for their approval. It does meet all of the Subdivision Regulations in our code.

MRS. STEELE MOVED, SECONDED BY MR. EASTMAN FOR CASE 046-19 BE FORWARDED TO THE CITY COUNCIL WITH THE RECOMMENDATION FOR APPROVAL. MOTION CARRIED, MRS. KOELKEBECK, MRS. STEELE, MR. RAMSOUR, MR. DERMOTT, MR. EASTMAN, AND MR. MCCULLOUGH, VOTING "AYE. (6 IN FAVOR, 0 NAYS, 1 ABSENT).

Z&P Meeting: December 9, 2019
City Council Meeting: January 6, 2019

STAFF PLANNING REPORT
Final Plat

CASE 046-19 Final Plat review

NAME OF SUBDIVISION Hal's Subdivision

LOCATION: NW Corner of W 26th St. & S. Roosevelt Ave.

APPLICANT: Joel Standeford

PRESENT ZONING: R-1 Single-family Residential

PRESENT LAND USE: Vacant

SITE CONTEXT:

	North	East	South	West
Existing Zoning	R-1	R-1	R-1	R-1
Land Use	Single-family Residential	Single-family Residential	Single-family Residential	Single-family Residential

SUBDIVISION:

Number of lots
8

TRANSPORTATION:

Streets with access	Classification	Right-of-way width
W 26th St.	Collector	55'
S Roosevelt Ave.	Local	50'

WILL TURNING MOVEMENTS OF THE PROPOSED USE CREATE AN UNDUE TRAFFIC HAZARD?

No.

UTILITIES: Existing. New easements are included with the replat. A new sewer extension is planned.

FLOOD PLAIN: N/A

STAFF ANALYSIS:

DOES THE PROPOSED SUBDIVISION COMPLY WITH THE CITY'S SUBDIVISION REGULATIONS?

Yes.

DISCUSSION:

The final plat approval is for Hal's Subdivision, a replat of lots 1-3 of Schoolview Estates Third Addition. This subdivision will be 8 lots, zoned R-1 Single-family Residential. The Final Plat does require City Council approval. This plat meets the requirements of the subdivision regulations.

Joel Standeford is seeking an 8-lot subdivision for new single-family development located at the Northwest corner of W 26th St. and S. Roosevelt Ave. Lots 7 and 8 will have a shared access easement to ensure adequate room for access off of McKinley Ave. The applicant has also opted for a stormwater buyout in order to meet the stormwater requirements of the proposed increase in impervious surface.

Staff recommends approval of Case 046-19.

ENCLOSURES:

Final Plat

Submit by Email | Print Form

RECEIVED 10-4-19

CITY OF JOPLIN, MISSOURI

FINAL PLAT CHECKLIST

Case # 046-19
~~Subdivision~~ No.:
Date Filed: 10-4-19
Date of Meeting: 12-9-19
Fee: $2

Return Form To:
Municipal Planner
321 East 4th Street
P.O. Box 1355
Joplin, Missouri 64802
417-624-0820 Ext. 511
FAX 417-625-4738

I. Name of Subdivision: Hal's Subdivision

II. Name of Owner: Joel Standeford

III. Name of Subdivider: Joel Standeford

IV. Name of Person who prepared the Plat: Gregory Bowers

V. Date of Hearing: 11/11/2019

VI. Location of Property by Streets: Southeast of McKinley Avenue, West of Roosevelt Avenue, North of 26th Street

VII. Present Zoning of Property R1

VIII. Present Uses of Property Vacant

IX. No. of Acres in Total Tract 2.03 No. of Lots 8

Instructions:

The following checklist is to be completed by the Municipal Planner and may accompany the Final Plat when it is submitted to the Planning and Zoning Commission. If the answer to any of the questions is "No", a written explanation may accompany this checklist.

X. Does the Final Plat show the following information?	Yes	No
A. Name of the subdivision.	☑	☐
B. Location of section, township, range, county and state, including the descriptive boundaries of the subdivision based on an accurate traverse, giving angular and linear dimensions which must be mathematically correct.	☑	☐

C. Location of monuments or bench marks. Location of such monuments shall be shown in reference to existing official monuments or the nearest established street, lines, including the true angles and distances to such reference points or monuments. ☑ ☐

D. The location of lots, blocks, streets, public highways, alleys, parks and other features, with accurate dimensions in feet and decimals of feet with the length of radii on all curves, and other information necessary to reproduce the plat on the ground. Dimensions shall be shown from all curbs to lot lines. ☑ ☐

E. Lots numbered clearly. Blocks numbered or lettered clearly in the center of the block. ☑ ☐

F. Exact locations, widths and names of all streets and alleys to be dedicated. ☑ ☐

G. Boundary lines and descriptions of the boundary lines of any area other than streets and alleys, which are to be dedicated or reserved for public use. ☑ ☐

H. Minimum area and associated minimum elevation for the building on each lot planned as a building site when requested by the Planning and Zoning Commission. ☑ ☐

I. Building setback lines on the front and side streets with dimensions. ☑ ☐

J. Name and address of the registered land surveyor preparing the plat. ☑ ☐

K. Scale of plat, 1" = 100' or larger, date or preparation and north point. ☑ ☐

L. Statement dedicating all easements, streets, alleys, and all other areas not previously dedicated. ☑ ☐

XI. Was the original on mylar, tracing cloth, or similar material, and were 10 copies submitted? ☑ ☐

XII. Have all acknowledgments been signed?

A. Owner or owners and all mortgager. ☐ ☐

B. Dedications or reservations. ☐ ☐

C. Surveyor preparing plat. ☐ ☐

XII. Has certification been submitted stating that all taxes and special assessments due and payable have been paid? ☐ ☐

XIII. Deed Restrictions:

A. Are any deed restrictions planned for subdivision? ☐ ☑

B. If so, has a copy been submitted? ☐ ☐

XIV. How has installation of the following improvement been guaranteed?

	Construction	Bond	Petition(%)
Streets			
Water			
Sewer			
Sidewalks			
Other, as required			
1.			
2.			
3.			

XV. Are additional comments attached? ☐ ☑

Case 046-19: Northwest corner of the intersection of W. 26th St. and S. Roosevelt Ave.
Final Plat Review

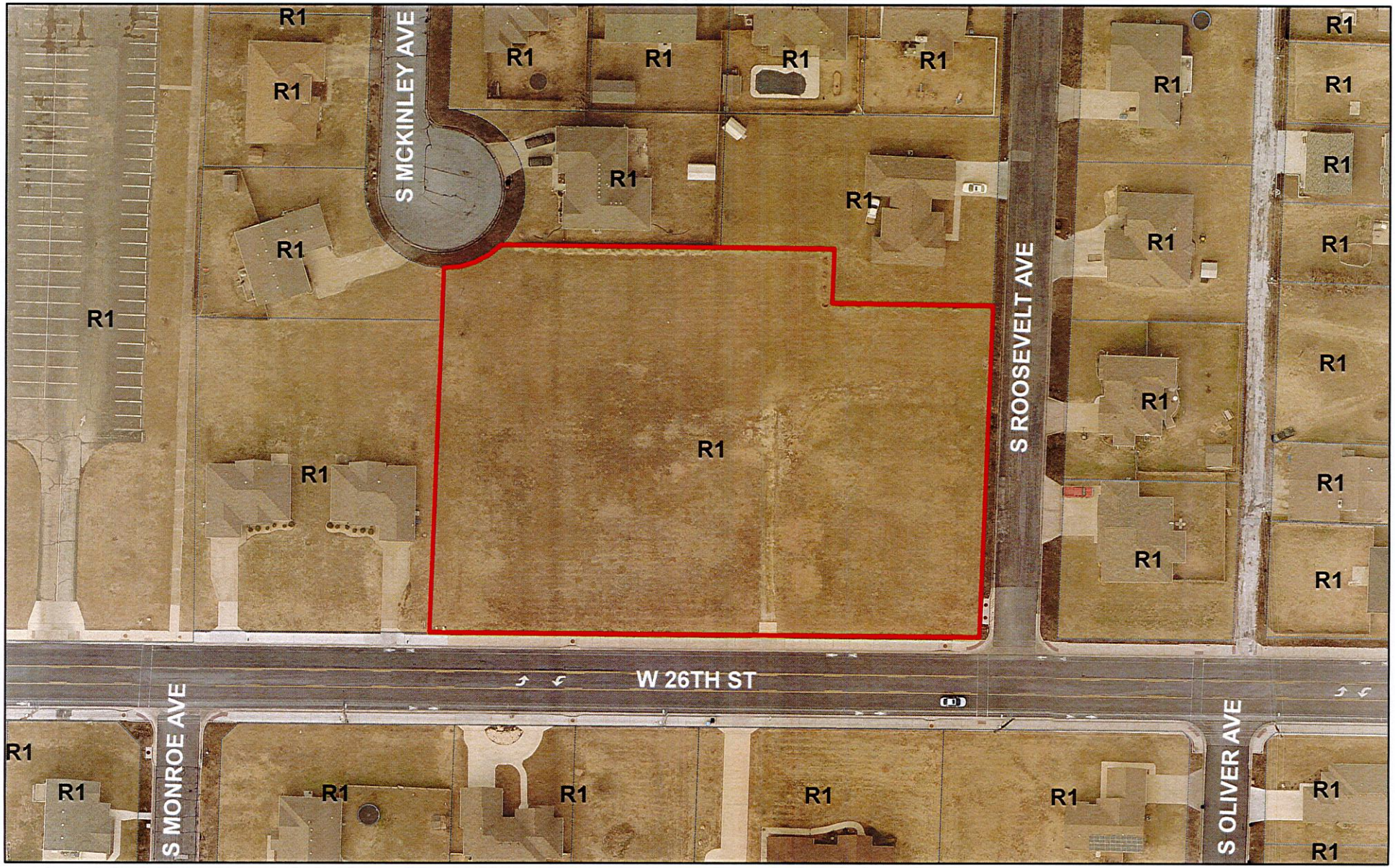

Case 046-19: Final Plat Review – A request to review the Final Plat of Hal's Subdivision located on the Northwest corner of the intersection of W. 26th St. and S. Roosevelt Ave. – Joel Standeford

N

0 37.5 75 150 225 300 Feet

FINAL PLAT OF
HAL'S SUBDIVISION
BEING A REPLAT OF LOTS 1-3 SCHOOLVIEW ESTATES THRID ADDITION CITY OF JOPLIN, JASPER COUNTY, MISSOURI

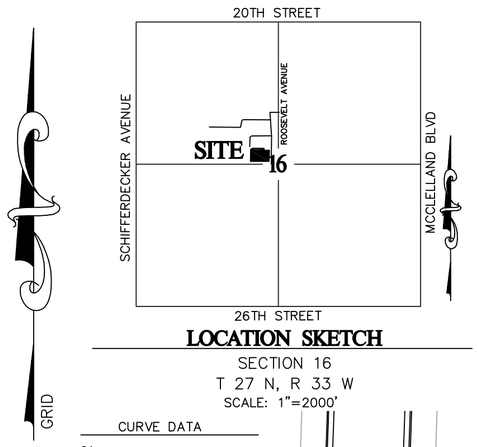

LOCATION SKETCH
SECTION 16
T 27 N, R 33 W
SCALE: 1"=2000'

GRAPHIC SCALE
40 0 20 40 80 160
(IN FEET)
1 inch = 40 ft.

CURVE DATA
C1 DELTA=23°31'50"
ARC LENGTH=20.53
RADIUS=50.00'
BEARING=N79°47'47"E
CHORD= 20.39'
C2 DELTA=23°31'50"
ARC LENGTH=20.53'
RADIUS=50.00'
BEARING=N56°15'56"E
CHORD=20.39'
C3 DELTA=132°04'37"
ARC LENGTH=115.26'
RADIUS=50.00'
BEARING=N21°32'18"W
CHORD=91.38'

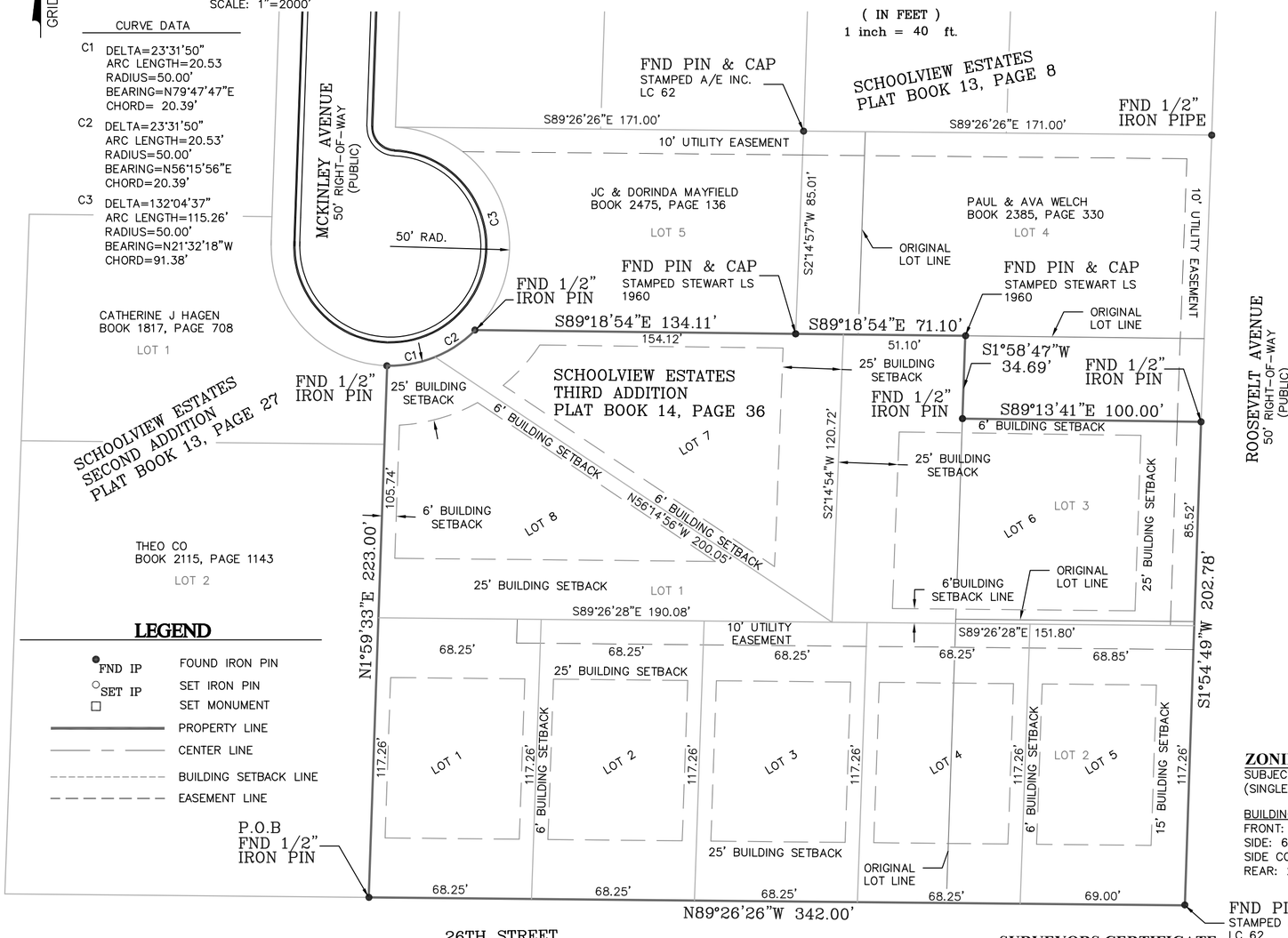

LEGEND
- FND IP — FOUND IRON PIN
- SET IP — SET IRON PIN
- SET MONUMENT
- PROPERTY LINE
- CENTER LINE
- BUILDING SETBACK LINE
- EASEMENT LINE

SURVEY DESCRIPTION

A SURVEY OF LOTS 1,2 AND 3 IN SCHOOLVIEW ESTATES THIRD ADDITION A REPLAT OF LOT 3 IN SCHOOLVIEW ESTATES SECOND ADDITION BEING A REPLAT OF LOTS 26,27,28 AND 29 IN SCHOOLVIEW ESTATES IN THE CITY OF JOPLIN, JASPER COUNTY, MISSOURI, ALL BEING IN THE SOUTHEAST QUARTER OF THE NORTHWEST QUARTER OF SECTION 16, TOWNSHIP 27 NORTH, RANGE 33 WEST OF THE FIFTH PRINCIPAL MERIDIAN, BEING MORE PARTICULARLY DESCRIBED AS FOLLOWS:

BEGINNING AT A FOUND 1/2" IRON PIN AT THE SOUTHWEST CORNER OF LOT ONE (1) IN SCHOOLVIEW ESTATES THIRD ADDITION AFOREMENTIONED, THENCE NORTH 01°59'33" EAST ALONG THE WEST LINE OF SAID LOT ONE (1), 223.00 FEET TO A FOUND 1/2" IRON PIN, THENCE 41.07 FEET ON A CURVE TO THE LEFT HAVING A RADIUS OF 50.00 FEET AN A BEARING OF NORTH 68°01'51" EAST AN A CHORD DISTANCE OF 39.92 FEET TO A FOUND 1/2" IRON PIN ON THE NORTH LINE OF SAID LOT ONE (1), THENCE SOUTH 89°18'54" EAST ALONG SAID NORTH LINE OF LOT ONE (1), 205.21 FEET TO A FOUND PIN AND CAP STAMPED STEWART LS 1960, THENCE SOUTH 01°58'47" WEST, 34.69 FEET TO A FOUND 1/2" IRON PIN, THENCE SOUTH 89°13'41" EAST, 100.00 FEET TO A FOUND 1/2" IRON PIN BEING ON THE WEST RIGHT-OF-WAY OF ROOSEVELT AVENUE, THENCE SOUTH 01°54'49" WEST ALONG SAID WEST RIGHT-OF-WAY, 202.78 FEET TO A FOUND PIN AND CAP STAMPED A/E INC. LC 62 AT THE INTERSECTION OF ROOSEVELT AVENUE AND 26TH STREET, THENCE NORTH 89°26'26" WEST ALONG THE NORTH RIGHT-OF-WAY OF 26TH STREET, 342.00 FEET TO THE POINT OF BEGINNING. CONTAINING 2.03 ACRES MORE OR LESS. BEARINGS BASED ON GRID NORTH OF THE MISSOURI COORDINATE SYSTEM OF 1983, WEST ZONE.

OWNER'S CERTIFICATE AND DEDICATION

SAID LAND HAS BEEN SUBDIVIDED AS SHOWN HEREON. STREETS AND EASEMENTS ARE RELINQUISHED AND DEDICATED TO THE PUBLIC. ALL TAXES AND SPECIAL ASSESSMENTS DUE AND PAYABLE HAVE BEEN PAID IN FULL, IN WITNESS WHERE OF, I, *JOEL STANDEFORD*, HAVE HEREUNTO SET MY HAND, THIS _____ DAY OF _____, 20 ____.

(Signed)_____
JOEL STANDEFORD

ACKNOWLEDGMENT

STATE OF MISSOURI)
) SS
COUNTY OF JASPER)

BE IT REMEMBERED THAT ON THIS _____ DAY OF _____, 20____ BEFORE ME, A NOTARY PUBLIC IN AND FOR SAID COUNTY AND STATE, CAME _____ TO ME PERSONALLY KNOWN TO BE THE SAME PERSON WHO EXECUTED THE FOREGOING INSTRUMENTS IN WRITING AND DULY ACKNOWLEDGED THE EXECUTION OF SAME, IN TESTIMONY WHEREOF, I HAVE HEREUNTO SET MY HAND AND AFFIXED MY NOTARY SEAL THE DAY AND THE YEAR ABOVE WRITTEN.

_____ (SEAL)
NOTARY PUBLIC

MY COMMISSION EXPIRES: _____

CITY APPROVAL

THIS PLAT OF HAL'S SUBDIVISION, INCLUDING EASEMENTS AND RIGHTS-OF-WAY ACCEPTED BY THE CITY COUNCIL HAS BEEN SUBMITTED TO AND APPROVED BY THE JOPLIN CITY COUNCIL BY ORDINANCE NO. _____, DULY PASSED AND APPROVED BY THE MAYOR ON THE_____DAY OF_____, 20_____. OF JOPLIN, MISSOURI,

ATTEST: _____ MAYOR

_____ _____
CITY CLERK PUBLIC WORKS DIRECTOR

CERTIFICATE OF RECORDING

STATE OF MISSOURI)
) SS
COUNTY OF JASPER)

I, _____, RECORDER OF JASPER COUNTY DO HEREBY CERTIFY THAT THE WITHIN INSTRUMENT OF WRITING WAS FILED ON THE _____DAY OF_____ _____, 20_____ A.D. _____ O'CLOCK _____MIN. _____M. DULY FOR RECORD AND IS RECORDED IN THIS OFFICE IN PLAT BOOK _____AT PAGE _____ IN TESTIMONY WHEREOF I HAVE HEREUNTO SET MY HAND AND AFFIXED MY SEAL AT NEOSHO, MISSOURI, THIS ____ DAY OF _____ 20_____.

_____ _____
RECORDER DEPUTY

ZONING INFORMATION

SUBJECT PROPERTY IS ZONED R-1
(SINGLE-FAMILY RESIDENTIAL DISTRICT)

BUILDING SETBACK LINES:
FRONT: 25'
SIDE: 6'
SIDE CORNER LOT: 15'
REAR: 25'

SUBDIVISION INFORMATION

TOTAL ACRES:	2.03±
TOTAL NO OF LOTS:	8
CURRENT ZONING:	R-1
PROPOSED USE:	SINGLE-FAMILY RESIDENTIAL
SUBMITTAL DATE:	09-24-19
SOURCE OF WATER:	MISSOURI AMERICAN WATER
SOURCE OF SEWER:	CITY OF JOPLIN
SOURCE OF TITLE:	BK 2513, PG 54
PRELIMINARY APPROVAL:	
ACCURACY STANDARD:	URBAN

DEVELOPER AND OWNER
JOEL STANDEFORD
3375 E. HOKE DRIVE
SPRINGFIELD MO. 65804

SOURCE OF DEED
C & S BUILDERS
BOOK 2513, PAGE 54

ENGINEER/LAND SURVEYOR
ANDERSON ENGINEERING, INC.
811 E. 3RD STREET
JOPLIN, MISSOURI 64801
WAYNE STEPHENSON, P.E.
GREGORY B. BOWERS, P.L.S.

SURVEYORS CERTIFICATE

KNOW ALL MEN BY THESE PRESENTS:
THAT I, GREGORY B. BOWERS, DO HEREBY CERTIFY THAT THIS PLAT WAS PREPARED UNDER MY SUPERVISION FROM AN ACTUAL SURVEY OF THE LAND HEREON DESCRIBED AND IN ACCORDANCE WITH THE CURRENT MISSOURI MINIMUM STANDARDS FOR URBAN PROPERTY SURVEYS, PREPARED BY ANDERSON ENGINEERING, INC., AND THAT THE CORNER MONUMENTS AND LOT CORNER PINS SHOWN HEREIN WERE PLACED OR WILL BE PLACED WITH IN 12 MONTHS AFTER RECORDING PLAT.
LAST REVISION DATE SEPTEMBER 24, 2019

ANDERSON ENGINEERING, INC. L.C. 62
by

PRELIMINARY

_____ DATE 9-24-19
GREGORY B. BOWERS
LS 2672

ANDERSON ENGINEERING
EMPLOYEE OWNED
ENGINEERS · SURVEYORS · LABORATORIES · DRILLING · GIS

811 E. 3RD STREET
JOPLIN, MISSOURI 64801
PHONE (417) 782-7399

FINAL PLAT
HAL'S SUBDIVISION

JOP 100-5347

DRAWN: RWW DATE: 09-24-19
CHECKED: GBB JOB NO: 19J010052
SHT. 1 OF 1 REV.___

P & Z Case 046-19
Joel Standeford
(P & Z Recommended Approval)

COUNCIL BILL NO. 2019-289 ORDINANCE NO.

AN ORDINANCE establishing grades and accepting the Final Plat of Hal's Subdivision located at NW Corner of W 26th St. & S. Roosevelt Ave. in the City of Joplin, Jasper County, Missouri.

BE IT ORDAINED BY THE COUNCIL OF THE CITY OF JOPLIN, MISSOURI, as follows:

Section 1. That the grades in the Plat of Subdivision located at the NW Corner of W 26th St. & S. Roosevelt Ave in the City of Joplin, Jasper County, Missouri be and the same are hereby fixed and established as follows:

A SURVEY OF LOTS 1,2 AND 3 IN SCHOOLVIEW ESTATES THIRD ADDITION A REPLAT OF LOT 3 IN SCHOOLVIEW ESTATES SECOND ADDITION BEING A REPLAT OF LOTS 26,27,28 AND 29 IN SCHOOLVIEW ESTATES IN THE CITY OF JOPLIN, JASPER COUNTY, MISSOURI, ALL BEING IN THE SOUTHEAST QUARTER OF THE NORTHWEST QUARTER OF SECTION 16, TOWNSHIP 27 NORTH, RANGE 33 WEST OF THE FIFTH PRINCIPAL MERIDIAN, BEING MORE PARTICULARLY DESCRIBED AS FOLLOWS:

BEGINNING AT A FOUND ½" IRON PIN AT THE SOUTHWEST CORNER OF LOT ONE (1) IN SCHOOLVIEW ESTATES THIRD ADDITION AFOREMENTIONED, THENCE NORTH 01˚59'33" EAST ALONG THE WEST LINE OF SAID LOT ONE (1), 223.00 FEET TO A FOUND ½" IRON PIN, THENCE 41.07 FEET ON A CURVE TO THE LEFT HAVING A RADIUS OF 50.00 FEET AND A BEARING OF NORTH 68˚01'51" EAST AN A CHORD DISTANCE OF 39.29 FEET TO A FOUND ½' IRON PIN ON THE NORTH LINE OF SAID LOT ONE (1), THENCE SOUTH 89˚18'54" EAST ALONG SAID NORTH LINE OF LOT ONE (1), 205.21 FEET TO A FOUND PIN AND CAP STAMPED STEWART LS 1960, THENCE SOUTH 01˚58'47" WEST, 34.69 FEET TO A FOUND ½" IRON PIN, THENCE SOUTH 89˚13'41" EAST, 100.00 FEET TO A FOUND ½" IRON PIN BEING ON THE WEST RIGHT-OF-WAY OF ROOSEVELT AVENUE, THENCE SOUTH 01˚54'49" WEST ALONG SAID WEST RIGHT-OF-WAY, 202.78 FEET TO A FOUND PIN AND CAP STAMPED A/E INC. LC 62 AT THE INTERSECTION OF ROOSEVELT AVENUE AND 26TH STREET, THENCE NORTH 89˚26'26" WEST ALONG THE NORTH RIGHT-OF-WAY OF 26TH STREET, 342.00 FEET TO THE POINT OF BEGINNING. CONTAINING 2.03 ACRES MORE OR LESS. BEARINGS BASE ON GRID NORTH OF THE MISSOURI COORDINATE SYSTEM OF 1983, WEST ZONE

Section 2. That said plat, having been filed showing that the lots have been staked out and platted and the streets and alleys have been dedicated to the public for public use, and that the proper levels have been run and the grades established for said addition, is hereby accepted

by the City of Joplin, Jasper County, Missouri, and according to the statues of the State of Missouri .

Section 3. That the City Clerk is hereby authorized and directed to endorse upon such plat the approval of the Council under her hand and the Seal of the City of Joplin, Missouri.

PASSED BY THE COUNCIL OF THE CITY OF JOPLIN, MISSOURI, this _____ day of _____, 2019, by a vote of _____.

_____
Gary L. Shaw, Mayor

ATTEST:

_____
Barbara J. Gollhofer, City Clerk

APPROVED AS TO FORM:

_____
Peter C. Edwards, City Attorney

CITY OF JOPLIN
COUNCIL AGENDA ITEM

ITEM
Council Bill 2020-600: authorizing the City of Joplin, Missouri ("City"), a municipal corporation, to enter into an agreement with Joplin Schools ("District"), a political subdivision and public school district of the State of Missouri, for the purpose of providing a school resource officer program between City and District; and authorizing the Interim City Manager to execute said agreements by and on behalf of the City of Joplin.

MEETING DATE
January 6, 2020

ORIGINATING DEPT
Police Department

ATTACHMENTS
CB2020-600 Ordinance; Exhibit A: School Resource Officer Agreement

REVIEWED BY
Dept. Head: Matt Stewart; City Attorney: Peter Edwards; Interim City Manager: Dan Pekarek

SUMMARY
This Council Bill authorizes the City to enter into an agreement with Joplin Schools for the purpose of providing a school resource officer program between City and District

BACKGROUND
The Joplin Police Department and Joplin Schools have a long history of working together to provide a safe learning environment for their schools. An MOU was signed in 2007 whenever two additional SRO's began working in the schools. This MOU has not been updated since that time. The City and Joplin Schools agreed that the MOU should be redone in order to be relevant with current State and Federal law. This MOU (2020) will replace the MOU that was completed in 2007. There are currently four (4) SRO's that are commissioned through the City working in Joplin Schools.

FUNDING SOURCE
N/A

RECOMMENDATION
Staff recommends adoption of this Council Bill on a non-emergency basis.

SCHOOL RESOURCE OFFICER AGREEMENT
BETWEEN THE CITY OF JOPLIN AND
JOPLIN SCHOOLS

THIS AGREEMENT ("Agreement") is made and entered into this _____ day of _____, 2019, by and between JOPLIN SCHOOLS ("District"), a political subdivision and public school district of the State of Missouri whose address is 1717 East 15th Street, Joplin, MO 64801, and the CITY OF JOPLIN, Missouri ("City"), a municipal corporation, whose address is 602 South Main Street, Joplin, MO 64801, for the purpose of providing a school resource officer program between the District and the City, hereinafter referred to together as "Parties."

WITHNESSETH:

WHEREAS, the City and District have a mutual goal to ensure a safe learning environment for students and staff at the District;

WHEREAS, the City and District developed a partnership under a formerly valid agreement wherein the Parties share responsibilities in furtherance of their mutual goal to ensure a safe learning environment for students and staff at the District; and

WHEREAS, the Parties desire to continue their partnership by utilizing four (4) City police officers as School Resource Officers ("SROs") to serve District schools during fall and spring semesters, and one (1) to two (2) SROs to serve District schools during summer session(s), all pursuant to the terms and conditions contained in this new Agreement.

NOW, THEREFORE, in consideration of the mutual agreements of the Parties set forth herein the parties agree as follows:

Section 1. Term. This Agreement shall become effective on the date on which it has been executed by both Parties, and shall extend through the end of the 2019-2020 school year, or at such other date as agreed by the Parties. Thereafter, subject to annual appropriations, it will be automatically renewed for successive one (1) year terms unless either party hereto gives the other party sixty (60) days written notice of intent to terminate the Agreement.

Section 2. Obligations of the City. The City agrees to:

(a) Annually, upon budget appropriations, provide adequate funds (wages and benefits) sufficient to employ four (4) full-time police officers who will serve the City and District.

(b) Select and employ the officers and pay the requisite salary and related employment benefits, including but not limited to workers' compensation insurance as required by Missouri law, to the officers, and provide the required training, equipment, transportation, and education for the officers as required by law, including but not limited to the 40-hour basic school resource officer training as outlined in § 168.450, RSMo, active shooter training, and will attend the SRO basic course within one year of appointment as an SRO.

(c) Ensure that SROs assigned to the District are Missouri POST certified peace officers, as defined in § 590.010, RSMo, and are in compliance with the provisions of Chapter 590, RSMo. In addition, the SROs will be commissioned by the City of Joplin, Jasper County, and Newton County.

Section 3. Obligations of the District. The District agrees to:

a) Annually, upon budget appropriations, provide adequate funds for one-half of the officers' wages. Wages are defined as the regular annual base salary, not to include overtime wages or fringe benefit costs.

(b) Direct the school facilities that will utilize the officers.

Section 4. Obligations of the SRO.

(a) The District has authorized the commissioned SROs to enforce laws relating to crimes committed:

i. On school premises/property;
ii. At school activities; and
iii. On school buses operating within the District.

(b) An SRO may conduct a justified stop on school property and enforce any local violation that occurs on school grounds.

(c) All crimes involving any sexual offense or any felony involving the use of force shall remain under the authority of the local jurisdiction(s) where the crime occurs.

(d) The SRO shall:

i. Provide a safe learning environment to the students and staff of the District.
ii. Facilitate and improve communication and relationships between the City and the students, parents of students, and staff of the District.

iii. Quickly and effectively respond to criminal activity that has occurred at the District or that affected a student or staff member of the District.
    1. The SRO will advise the District Administrators of law enforcement actions as soon as practical.
    2. The SRO will NOT release confidential criminal investigation information to the District administrators or staff unless approved to do so by the Chief of Police or his/her designee.

iv. Help ensure compliance with the Missouri Safe Schools Act.

v. Assist with facilitation or conducting non-suspect interviews of the District students or staff for investigative personnel, in accordance with District policies.

vi. Assist with providing non-confidential information to law enforcement officers or juvenile officers conducting investigations.

vii. Make appropriate referrals to the appropriate Juvenile Office.

viii. Provide safety and security recommendations to District administrators for both personal and physical safety.

ix. Coordinate the delivery of requested presentations to District students on special topic issues, such as, intoxicated driving, cyber safety, bullying, interpersonal violence, etc.

x. Participate, where practical, in school functions, such as: attending athletic events, school dances/prom, graduation events, PTA, school board meetings, etc.

xi. Adhere to all State of Missouri and Federal laws, as well as all policies and procedures of the District. In the event of conflict between direction from City and District, direction from City shall prevail. However, if the District, in its sole discretion, determines a SRO has violated the policies and procedures of the District, the District can request a meeting with the SRO's supervisor to determine next steps regarding the SRO's evaluation and, the District administration may request the SRO's immediate removal from the program and the District. The City shall comply with the District's request based on the performance of the SRO, without requiring

the District participate in the mediation process outlined in Section 5 of this agreement.

xii. While working as a police officer for the City, the SRO shall perform regular work duties at the sole discretion of the City. While serving as an SRO for the District, the SRO will perform day-to-day duties as agreed upon by the District and City.

(e) SROs will be responsible for the Rise Above program and other functions and provide such programs to District students in accordance with the "age appropriate" guidelines set forth in the Rise Above program.

Section 5. Employee Evaluations. As an employee of the City, the City will have the responsibility for all employee/employer related actions including the annual employee evaluation and any necessary disciplinary actions. The City will provide for input from the District into these employee evaluations and/or disciplinary actions. In the event the principal of the school to which an SRO is assigned feels that the particular SRO is not effectively performing his or her duties and responsibilities, the principal shall discuss the matter with the District's Assistant Superintendent of Operations, who will try to resolve any issues. However, if the District's Assistant Superintendent of Operations and the principal agree that the respective SRO should be removed from the program, the District's Assistant Superintendent of Operations will provide his or her written recommendation to the City. If the City so desires, the Assistant Superintendent of Operations will meet with the Chief of Police and the SRO in an attempt to mediate or resolve any problems. If, within a reasonable amount of time after the District's Assistant Superintendent of Operations provided his or her written recommendation to the City, the problem has not been resolved, or in the event the City does not seek mediation, then the SRO shall be removed from the program and the District. The City may dismiss or reassign an SRO at its discretion. In the event of the resignation, dismissal, reassignment, or long-term absences of an SRO, the City shall provide a replacement for the SRO as soon as possible, when staffing levels are adequate to do so. If a replacement is not provided within 60 days of such resignation, dismissal, reassignment, or notification of long-term absence, the Parties agree they will meet to discuss the terms of this Agreement and determine whether any amendment is

necessary. The Parties agree that the City will not invoice the District charges for any vacant SRO position.

Section 6. Insurance, Indemnification, and Hold Harmless. In the event that a SRO is injured during duties as a SRO, by intentional, reckless, or grossly negligent acts by a District employee, or by a known dangerous condition or defect in or on District property or facilities, the District agrees to indemnify and hold harmless the City for all damages suffered by said SRO that City shall be legally obligated to pay. The District shall maintain a policy of general liability insurance with combined limits of at least $2,000,000.00, naming the City as an additional insured. In no event shall the language of this Agreement constitute or be construed as a waiver or limitation of any party's rights or defenses with regard to each party's applicable sovereign, governmental, or official immunities and protections as provided by federal and state constitution or law.

Section 7. Invoicing. Each falls semester the City will submit an invoice to the District for the annual salary costs. Said invoice shall be paid within thirty (30) days of receipt.

Section 8. Assignment. The Parties agree that this is a personal services contract and cannot be assigned by either party without the other party's written consent.

Section 9. Modification and Waiver. Modification and waiver of any provision of any provisions of this Agreement shall be effective only if made in writing and attached to this Agreement, signed by both Parties. Failure of either party to insist upon strict performance of any of the provisions of this Agreement shall not be construed as a waiver of any subsequent default of the same or similar nature.

Section 10. Binding Effect. This Agreement shall be binding upon and insure to the benefit of the parties hereto, their successors, administrators, heirs, and permitted assigns.

Section 11. Information Sharing and Confidentiality.

(a) Information Sharing with SROs. The Parties agree that with this Agreement, the District is outsourcing the function of providing safety and security for District schools to the SROs serving the District. Therefore, the SROs are considered "school officials" under the Family Educational Rights and Privacy Act (FERPA) and the District may share education records with an SRO with legitimate educational interests, as long as the following conditions are met:

1. The SRO is performing an institutional service or function for which the District would otherwise use employees (e.g. to ensure school safety);
2. The SRO is under the direct control of the District with respect to the use and maintenance of the education records and complies with the requirements in subsection c of this section;
3. The SRO is subject to FERPA's use and re-disclosure requirements in 34 C.F.R. § 99.3(a), which provides that the personally identifiable information from education records may be used only for the purposes for which the disclosure was made (e.g. to promote school safety and the physical security of students), and which limits the re-disclosure of personally identifiable information from education records; and
4. The SRO meets the criteria specified in the District's annual notification of FERPA rights for being school officials with legitimate educational interests in the education records.

(b) Information Sharing with the City. Notwithstanding any other provision of this Agreement, the Parties shall fully comply with FERPA and all other applicable state or federal laws regarding the confidentiality of student information, as well as Board Policy JO-1, *Student Records*. Information obtained by District staff may be shared with the City as long as the information is not personally identifiable information derived from education records, as defined in 34 C.F.R. § 99.3. For example, information received orally from a student may be shared, even if later recorded in a written statement used by District staff for disciplinary purposes. Information from education records will only be shared with the City in accordance with FERPA, including, but not limited to the following circumstances:

1. The information is "directory information," as defined in Board Policy JO-1, unless the parent/guardian or eligible student requested specifically that such information be kept confidential.
2. The parent/guardian or eligible student has provided consent.
3. The information is being provided in response to a subpoena.
4. The information is being provided in a specific situation that presents imminent danger to students or members of the community or that requires an immediate

need for information in order to avert or diffuse serious threats to the safety or health of a student or other individual.

5. The disclosure is to law enforcement or juvenile justice authorities and concerns law enforcement's or juvenile justice authorities' ability to effective serve, prior to adjudication, the student whose records are released.

(c) **Data Use and Protection Requirements.** Any individual, including an SRO or any officer, employee, or agent of the City, to whom personally identifiable information from education records are disclosed pursuant to this Agreement must comply with the following data use and protection requirements:

1. The officers, employees, and agents of the City that receive information must comply with the use and re-disclosure requirements of FERPA in 34 C.F.R. § 99.33(a). Specifically, the officers, employees, and agents of the City that receive information may only use the information for the purposes for which the disclosure was made and shall not disclose the information to any other party without the prior consent of the parent or eligible student. The District will be responsible for providing annual training related to FERPA and confidentiality in the school setting.
2. The officers, employees, and agents of the City shall not access or remove from District property any personally identifiable information contained in education records, including computers and computer systems, unless the officer, employee, or agent of the City is a school official with a legitimate educational interest in the information.
3. The individuals to whom such information is disclosed must comply with all applicable restrictions set forth in federal law.

(d) Law Enforcement Unit Records. "Law Enforcement Unit" means any individual, office, department, division, or other component of the District, such as an SRO, that is officially authorized or designated to (a) enforce any local, State, or federal law, or refer to appropriate authorities a matter for enforcement of any local, State, or federal law, against any individual or organization other than the District; or (b) maintain the physical security and safety of the District. Records which are: (1) created by a law enforcement unit; (2) created for a law enforcement purpose; and (3) maintained by the law enforcement unit are Law Enforcement Unit

Records and not "education records" under FERPA. The Parties agree that Law Enforcement Unit Records may be subject to release in accordance with the City's policies and procedures.

Section 12. Notice. When any notice or statement of other communication is required under this Agreement, it shall be sent to the following addresses, unless otherwise specifically advised:

To Joplin Schools:
Assistant Superintendent for Operations
Memorial Education Center
825 South Pearl Avenue
Joplin, MO 64801

To the City of Joplin:
City Attorney
602 S. Main St.
Joplin, MO 64801

Section 13. Termination. Either party may terminate this Agreement at any time by giving one hundred twenty (120) days written notice to the other party.

The remainder of this page is intentionally left blank.

IN WITNESS WHEREOF, the Parties have caused this Agreement to be signed by their duly authorized officers.

For JOPLIN SCHOOLS:

By: _____ Date: _____
Sharrock Dermott, Board of Education President

Attested by: _____ Date: _____
Pat Waldo, Board of Education Secretary

For CITY OF JOPLIN:

By: _____ Date: _____
Name: _____
Title: _____

By: _____ Date: _____
Name: _____
Title: _____

COUNCIL BILL NO. 2020-600 ORDINANCE NO

AN ORDINANCE authorizing the City of Joplin, Missouri ("City"), a municipal corporation, to enter into an agreement with Joplin Schools ("District"), a political subdivision and public school district of the State of Missouri, for the purpose of providing a school resource officer program between City and District; and authorizing the Interim City Manager to execute said agreements by and on behalf of the City of Joplin.

BE IT ORDAINED BY THE COUNCIL OF THE CITY OF JOPLIN, MISSOURI, as follows:

Section 1. That the agreement with Joplin Schools for the purpose of providing a school resource officer program between City and District, a true and accurate copy of said agreement being attached hereto and incorporated as "Exhibit A," be and the same is hereby approved.

Section 2. That the City Manager of the City of Joplin, Missouri, or his designee, is hereby authorized and directed to execute said agreements, or agreements in substantially similar form, by and on behalf of the City of Joplin.

PASSED BY THE COUNCIL OF THE CITY OF JOPLIN, MISSOURI, this _____ day of _____, 2020, by a _____ vote.

_____
Gary L. Shaw, Mayor

ATTEST:

_____
Barbara J. Gollhofer, City Clerk

APPROVED AS TO FORM:

_____
Peter C. Edwards, City Attorney

CITY OF JOPLIN
COUNCIL AGENDA ITEM

ITEM
Council Bill 2020-103 Cost Share Agreement between City of Joplin and Missouri Highways and Transportation Commission for intersection improvements included with the 15th Street Extension Project at 15th Street & Rangeline Road

MEETING DATE
January 21, 2020

ORIGINATING DEPT
Public Works-Engineering

ATTACHMENTS
Agreement; Council Bill 2020-103; Location Map

REVIEWED BY
Dept. Head: David Hertzberg; Finance Director: Leslie Haase; City Attorney: Peter Edwards; Interim City Manager: Dan Pekarek

SUMMARY
This Council Bill authorizes the City Manager or his designee to enter into a Cost Share Agreement with the Missouri Highways and Transportation Commission for improvements at the intersection of 15th Street and Rangeline Road.

BACKGROUND
On January 10, 2005, the City Council adopted Ordinance No. 2005-006 approving the 1717 Market Place Tax Increment Financing Plan. Funds generated in the district were to be used on various infrastructure improvements including the 17th Street extension and a signalized intersection at 17th & Rangeline. Also included in the required improvements was extending 15th Street from Rangeline Road approximately two blocks east. In 2018, the developer approached the City, requesting that the City provide project management for the 15th Street Extension. The options to manage the project were presented to Council, with Council providing direction to staff. The City Manager met with the City Attorney, Finance, Zoning & Planning, and Public Works to discuss the request. Staff agreed to manage the project. The amendment to the Market Place 1717 TIF Plan was approved by City Council on May 21, 2018; Ordinance 2018-063.

To start construction on the project three key tasks need to be completed. The design must be completed, right of way acquired based on the design, and a permit or cost sharing agreement must be obtained with the Missouri Highways and Transportation Commission for the intersection improvements at 15th & Rangeline Road. Attached is the proposed agreement between the City of Joplin and the Missouri Highways & Transportation Commission. The total estimated cost for this project within the MoDOT ROW is currently estimated to be nine hundred fourteen thousand eight hundred eight-five dollars ($914,885). The Commission will pay for 50% of the total project cost, up to and not to exceed the maximum amount of four hundred fifty-seven thousand four hundred forty-three dollars ($457,443). The City will use funds from the Infrastructure Improvement Fund to cover the remaining 50% of the costs for the work within MoDOT ROW, as well as for the remainder of the 15th St. Extension Project. These City funds will be reimbursed by the TIF.

Based on the current schedule, the project is planned to be advertised for bids in late 2020, with construction activities to occur in 2021.

FUNDING SOURCE

Infrastructure Improvements Fund, to be reimbursed by the TIF

RECOMMENDATION

Staff recommends approval of Council Bill 2020-103, a Cost Share Agreement with the Missouri Highways and Transportation Commission on an emergency basis, per section 2.12(6) of the HOME RULE CHARTER of the City of Joplin, Missouri, and as such, this ordinance shall become effective immediately upon its passage.

CCO Form: FS08
Approved: 03/04 (BDG)
Revised: 03/17 (MWH)
Modified:

Loop 49, Jasper County
Project No. J7S3430
City of Joplin

MISSOURI HIGHWAYS AND TRANSPORTATION COMMISSION
COST SHARE AGREEMENT

THIS AGREEMENT is entered into by the Missouri Highways and Transportation Commission (hereinafter, "Commission") and the City of Joplin (hereinafter, "Entity").

WITNESSETH:

WHEREAS, the Entity applied to the Commission's Cost Share Committee for participation in the Commission's *Cost Share Program*; and

WHEREAS, on September 26, 2019, the Cost Share Committee approved the Entity's application to the *Cost Share Program* subject to the terms and conditions of this Agreement.

NOW, THEREFORE, in consideration of the mutual covenants, promises and representations in this Agreement, the parties agree as follows:

(1) PURPOSE: The purpose of this Agreement is to co-ordinate the participation by the Entity of the City of Joplin in the cost of the Commission's Project J7S3430.

(2) LOCATION: The transportation improvement that is the subject of this Agreement is contemplated at the following location:

The intersection of Missouri Business Loop 49 (Rangeline Road), 15th Street in the City of Joplin.

The general location of the project is shown on attachment marked "Exhibit A" and incorporated herein by reference.

(3) AMENDMENTS: Any change in this Agreement, whether by modification or supplementation, must be accomplished by a formal contract amendment signed and approved by the duly authorized representatives of the Entity and the Commission.

(4) COMMISSION REPRESENTATIVE: The Commission's Southwest District Engineer is designated as the Commission's representative for the purpose of administering the provisions of this Agreement. The Commission's representative may designate by written notice other persons having the authority to act on behalf of the Commission in furtherance of the performance of this Agreement.

(5) ASSIGNMENT: The Entity shall not assign, transfer or delegate any interest in this Agreement without the prior written consent of the Commission.

(6) LAW OF MISSOURI TO GOVERN: This Agreement shall be construed according to the laws of the State of Missouri. The Entity shall comply with all local, state and federal laws and regulations relating to the performance of this Agreement.

(7) CANCELLATION: The Commission may cancel this Agreement at any time for a material breach of contractual obligations or for convenience by providing the Entity with written notice of cancellation. Should the Commission exercise its right to cancel this Agreement for such reasons, cancellation will become effective upon the date specified in the notice of cancellation sent to the Entity.

(8) PLANS AND CONSTRUCTION:

(A) The Entity shall be responsible for preparation of plans, specifications and construction for the herein improvements. This includes design, letting of project, and inspection of project. The plans shall be prepared in accordance with and conform to Commission requirements and are subject to the Commission's approval.

(B) The Commission will provide preliminary engineering review, right of way review and construction engineering review.

(C) The Entity shall be responsible for the preparation of detailed right-of-way. The Entity shall acquire any additional necessary right-of-way required for the project and in doing so agrees that it will comply with all applicable federal laws, rules and regulations, including 42 U.S.C. 4601-4655, the Uniform Relocation Assistance and Real Property Acquisition Act, as amended and any regulations promulgated in connection with the Act. The Commission will review and approve the legal descriptions, which are required prior to the deeds being executed by property owners. Commission review of the parcels being acquired is required to ensure the Uniform Act was followed.

(9) FINANCIAL RESPONSIBILITIES: With regard to work under this Agreement, the Entity agrees as follows:

(A) The total project cost will include preliminary engineering, right-of-way, utilities, construction, and inspection. The total project cost is currently estimated to be nine hundred fourteen thousand eight hundred eighty-five dollars ($914,885). The details of the estimated cost breakdown are listed below and in "Exhibit B", which is attached hereto and made part hereof.

(B) The Entity shall be responsible for fifty percent (50%) of the total project cost. The current estimate of the Entity's responsibilities is four hundred fifty-seven thousand four hundred forty-three dollars ($457,443).

(C) The Commission will pay for fifty percent (50%) of the total project cost up to and not to exceed the maximum amount of four hundred fifty-seven thousand four hundred forty-three dollars ($457,443). Of this amount, the Commission shall provide four hundred thirty-two thousand four hundred forty-two dollars ($432,442) from the Commission's Cost Share program, available in State Fiscal Year 2021, and preliminary engineering review, right of way review and construction engineering review services by MoDOT District personnel estimated to total twenty-five thousand dollars ($25,000). The Commission's Cost Share Program funds shall not be used off the State Highway System.

(D) The Entity is responsible for the balance of the project in excess of nine hundred fourteen thousand eight hundred eighty-five dollars ($914,885). The Entity shall be responsible for all cost overruns. The Entity and Commission will share cost underruns equally, based on the pro rata share.

(E) The Entity may invoice the Commission monthly after the costs are incurred beginning July 1, 2020 or after the project is complete.

(10) COMMISSION RIGHT OF WAY: All improvements made within the state-owned right-of-way shall become the Commission's property, and all future alterations, modifications, or maintenance thereof, will be the responsibility of the Commission.

(11) VENUE: It is agreed by the parties that any action at law, suit in equity, or other judicial proceeding to enforce or construe this Agreement, or regarding its alleged breach, shall be instituted only in the Circuit Court of Cole County, Missouri.

(12) SOLE BENEFICIARY: This Agreement is made for the sole benefit of the parties hereto and nothing in this Agreement shall be construed to give any rights or benefits to anyone other than the Commission and the Entity.

(13) NO INTEREST: By contributing to the cost of this project or improvement, the Entity gains no interest in the constructed roadway or improvements whatsoever. The Commission shall not be obligated to keep the constructed improvements or roadway in place if the Commission, in its sole discretion, determines removal or modification of the roadway or improvements, is in the best interests of the state highway system. In the event the Commission decides to remove the landscaping, roadway, or improvements, the Entity shall not be entitled to a refund of the funds contributed by the Entity pursuant to this Agreement.

(14) AUTHORITY TO EXECUTE: The signers of this Agreement warrant that they are acting officially and properly on behalf of their respective institutions and have been duly authorized, directed and empowered to execute this Agreement.

(15) SECTION HEADINGS: All section headings contained in this Agreement are for the convenience of reference only and are not intended to define or limit the

scope of any provision of this Agreement.

(16) ADDITIONAL FUNDING: In the event the Commission obtains additional federal, state, local, private or other funds to construct the improvement being constructed pursuant to this Agreement that are not obligated at the time of execution of this Agreement, the Commission, in its sole discretion, may consider any request by the Entity for an off-set for the deposited funds, a reduction in obligation, or a return of, a refund of, or a release of any funds deposited by the Entity with the Commission pursuant to this Agreement. In the event the Commission agrees to grant the Entity's request for a refund, the Commission, in its sole discretion, shall determine the amount and the timing of the refund. Any and all changes in the parties' financial responsibilities resulting from the Commission's determination of the Entity's request for a refund pursuant to this provision must be accomplished by a formal contract amendment signed and approved by the duly authorized representative of the Entity and the Commission.

(17) NO ADVERSE INFERENCE: This Agreement shall not be construed more strongly against one party or the other. The parties to this Agreement had equal access to, input with respect to, and influence over the provisions of this Agreement. Accordingly, no rule of construction which requires that any allegedly ambiguous provision be interpreted more strongly against one party than the other shall be used in interpreting this Agreement.

(18) ENTIRE AGREEMENT: This Agreement represents the entire understanding between the parties regarding this subject and supersedes all prior written or oral communications between the parties regarding this subject.

(19) VOLUNTARY NATURE OF AGREEMENT: Each party to this Agreement warrants and certifies that it enters into this transaction and executes this Agreement freely and voluntarily and without being in a state of duress or under threats or coercion.

(20) NOTICES: Any notice or other communication required or permitted to be given hereunder shall be in writing and shall be deemed given three (3) days after delivery by United States mail, regular mail postage prepaid, or immediately after delivery in person, or by facsimile or electronic mail addressed as follows:

Commission to: Missouri Department of Transportation
Attn: Steve Campbell
3025 E Kearney St
Springfield, MO 65803
Facsimile No.: (417) 895-7637
Email: Steven.Campbell@modot.mo.gov

Entity to: David Hertzberg
602 S Main St
Joplin, MO 64801

Facsimile No.: (417) 625-4738
Email: dhertzbe@joplinmo.org

or to such other place as the parties may designate in accordance with this Agreement.

(21) AUDIT OF RECORDS: The Entity must maintain all records relating to this Agreement, including but not limited to invoices, payrolls, etc. These records must be available at all reasonable times at no charge to the Commission and/or its designees or representatives during the period of this Agreement and any extension thereof, and for three (3) years from the date of final payment made under this Agreement.

(22) INDEMNIFICATION:

(A) To the extent allowed or imposed by law, the Entity shall defend, indemnify and hold harmless the Commission, including its members and department employees, from any claim or liability whether based on a claim for damages to real or personal property or to a person for any matter relating to or arising out of the Entity's wrongful or negligent performance of its obligations under this Agreement.

(B) The Entity will require any contractor procured by the Entity to work under this Agreement:

(1) To obtain a no cost permit from the Commission's district engineer prior to working on the Commission's right-of-way, which shall be signed by an authorized contractor representative (a permit from the Commission's district engineer will not be required for work outside of the Commission's right-of-way); and

(2) To carry commercial general liability insurance and commercial automobile liability insurance from a company authorized to issue insurance in Missouri, and to name the Commission, and the Missouri Department of Transportation and its employees, as additional named insureds in amounts sufficient to cover the sovereign immunity limits for Missouri public entities ($500,000 per claimant and $3,000,000 per occurrence) as calculated by the Missouri Department of Insurance, Financial Institutions and Professional Registration, and published annually in the Missouri Register pursuant to Section 537.610, RSMo.

(C) In no event shall the language of this Agreement constitute or be construed as a waiver or limitation for either party's rights or defenses with regard to each party's applicable sovereign, governmental, or official immunities and protections as provided by federal and state constitution or law.

Remainder of Page Intentionally Left Blank; Signatures and Execution Appear on Following Page

IN WITNESS WHEREOF, the parties have entered into this Agreement on the date last written below.

Executed by the Entity this ____ day of _____, 20__.

Executed by the Commission this ____ day of _____, 20___.

MISSOURI HIGHWAYS AND TRANSPORTATION COMMISSION	CITY OF JOPLIN
_____	By _____
Title _____	Title _____
ATTEST:	ATTEST:
_____	By _____
Secretary to the Commission	Title _____
Approved as to Form:	Approved as to Form:
_____	_____
Commission Counsel	Title:_____
	Ordinance No _____

Note: If the Entity is a county with a commission form of government, additional lines need to be inserted to allow all three commissioners to sign the agreement.

Exhibit "A"
Project Location

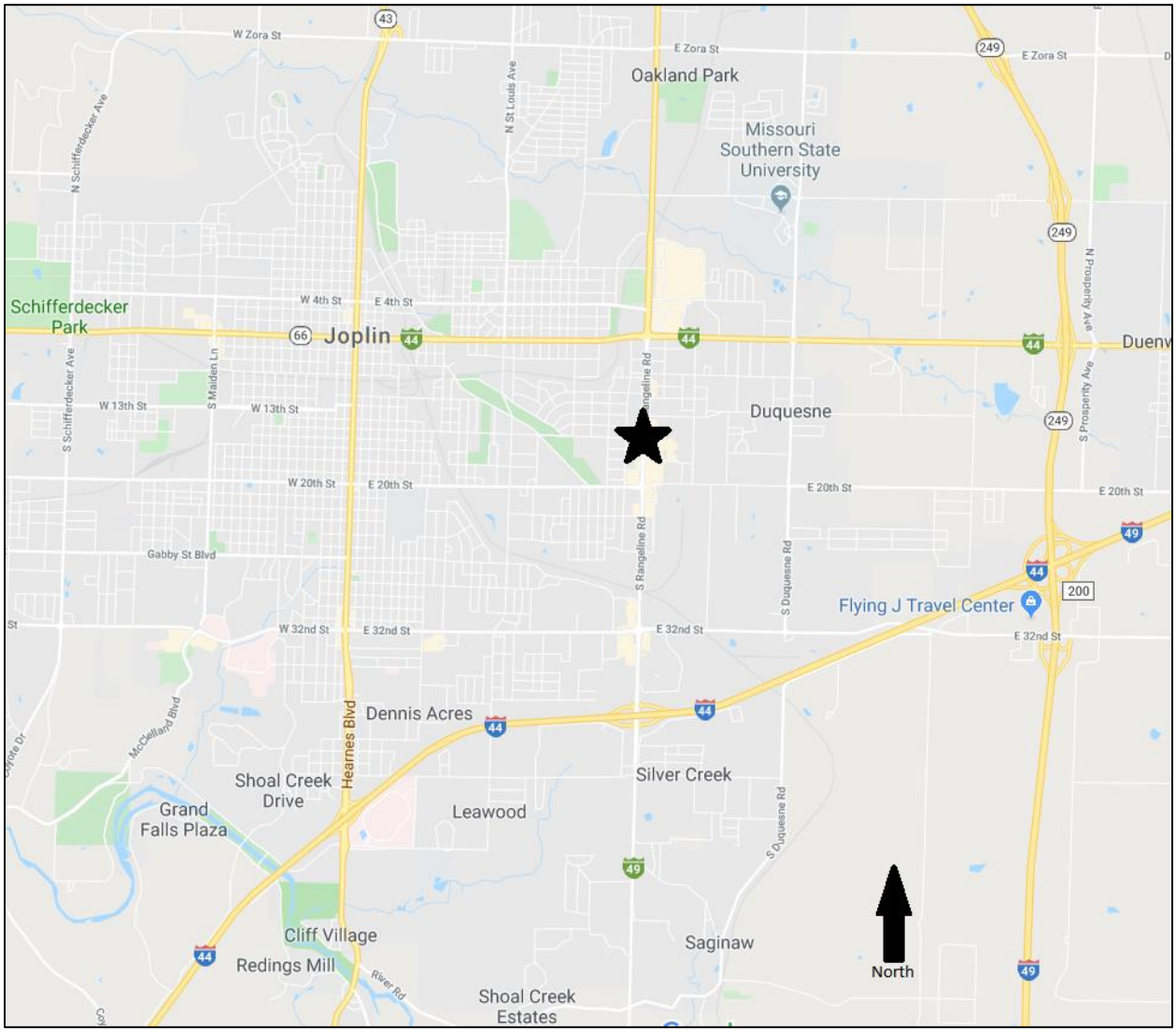

Exhibit "B"
Financial Summary

Project Name: Rangeline Road and 15th Street
MoDOT Job Number: J7S3430

Description: Intersection improvements on Loop 49 (Rangeline Road) at 15th Street in Joplin.

Definition of "Total Project" for Cost Apportionment Includes:

Preliminary Engineering	ROW Incidentals	Utilities
ROW	Construction and Non-Contractuals	Construction Engineering

Project Estimate

	Current Estimate and Inflation	Cost Share Eligible
Preliminary Engineering	$ 122,500	$ 122,500
MoDOT Preliminary Engineering Review	$ 10,000	$ 10,000
Right-of-way	$ 139,185	$ 139,185
Right-of-way Incidentals	$ 11,500	$ 11,500
MoDOT Right-of-Way Review	$ 5,000	$ 5,000
Utilities	$ 50,000	$ 50,000
Construction w/ Contingency	$ 466,700	$ 466,700
Construction Engineering	$ 100,000	$ 100,000
MoDOT Construction Engineering Review	$ 10,000	$ 10,000
Total	$ 914,885	$ 914,885

Project Responsibilities

Preliminary Engineering	Joplin
ROW Acquisition	Joplin
Letting	Joplin
Inspection	Joplin

Financial Responsibilities

City of Joplin	$ 457,443	Total Local Share
		$ 457,443
		50.0%
MoDOT Operations/Engineering Oversight	$ 25,000	Total MoDOT Share
MoDOT Cost Share Program	$ 432,443	$ 457,443
		50.0%

How are overruns and underruns handled?

Entity is responsible for 100% of overruns. Entity and Commission to share under run savings 50%-50%.

DESCRIPTION OF PROJECT:

The proposed improvements include increasing the turning radius at the northeast and southeast corners at the intersection of Rangeline Road and 15th Street, adding a dedicated right-turn lane for westbound 15th Street to northbound Rangeline Road, converting the existing right-turn lane into an additional dedicated through lane, improveing access management along 15th Street by adding curbs, gutters, and commerical entrances, and providing sidewalks along 15th Street to restaurants and stores located to the east of Rangeline Road.

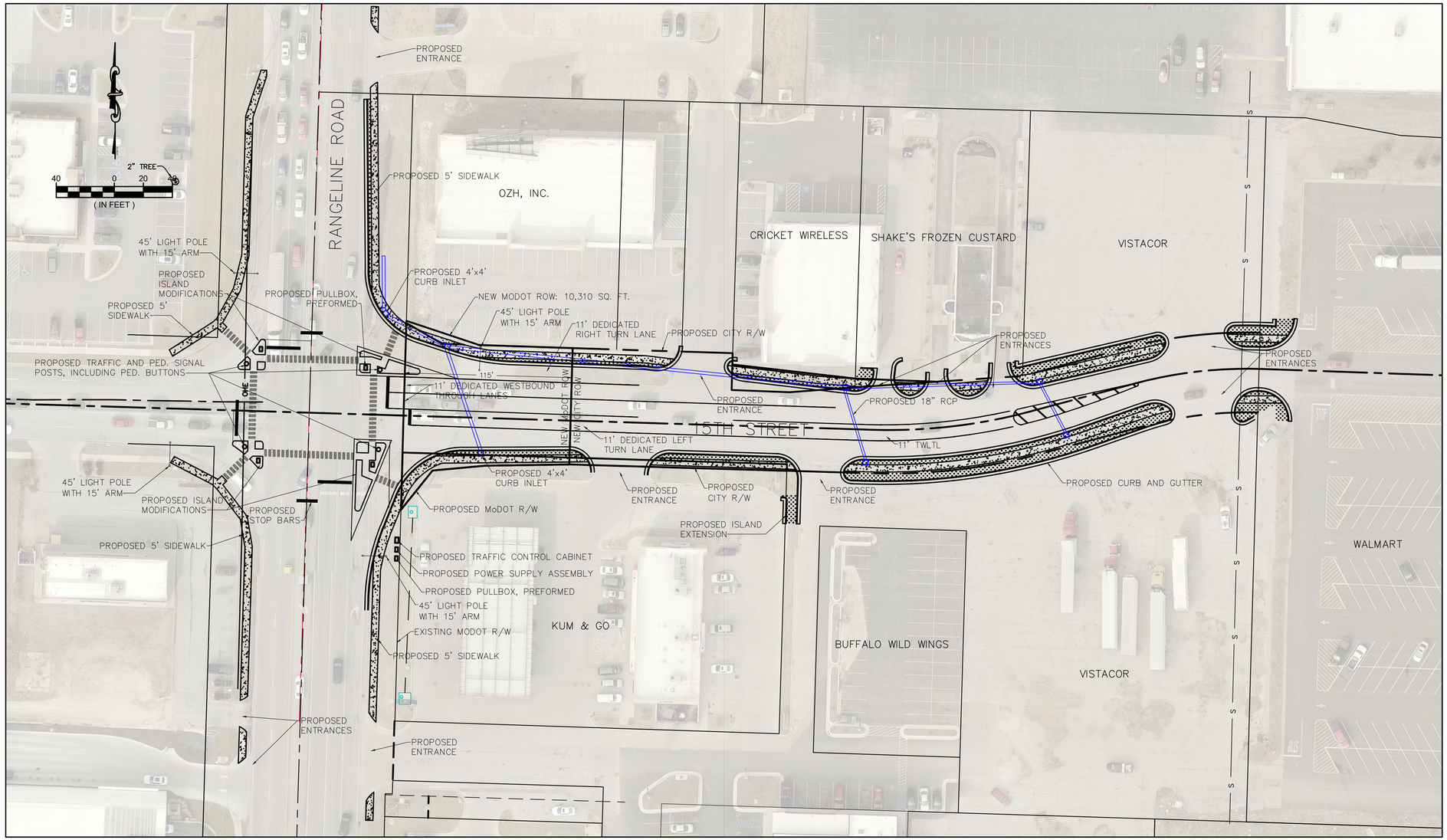

ANDERSON ENGINEERING
EMPLOYEE OWNED
ENGINEERS • SURVEYORS • LABORATORIES • DRILLING
218 5TH, P.O. BOX 286 • MONETT, MISSOURI 65708 • PHONE (417) 236-0112
ANDERSON COA# 000062 • ANDREW ECKHART, PE# 2009018717

PRELIMINARY

NO.	REVISIONS DESCRIPTION	BY	DATE

DRAWING INFO.	
FIELD BY:	
DRAWN BY:	DJMS
CHECK BY:	AE
DATE:	
FIELD BOOK:	
JOB NUMBER:	

©COPYRIGHT ANDERSON ENGINEERING, INC. 2012

EXHIBIT II
CONCEPTUAL PLAN
RANGELINE RD. AND 15TH ST. IMPROVEMENTS
SEC 7, T27N, R32W AND SEC 12, T27N, R33W
JASPER COUNTY, JOPLIN, MO.

SHEET NUMBER
2
OF 2

COUNCIL BILL NO. 2020-103 ORDINANCE NO.

AN ORDINANCE approving the City of Joplin to enter into a Cost Share Agreement with the Missouri Highways and Transportation Commission; authorizing the City Manager or his designee to execute the same by and on behalf of the City of Joplin; and containing an emergency clause.

BE IT ORDAINED BY THE COUNCIL OF THE CITY OF JOPLIN, as follows:

Section 1. That the City enter into a Cost Share Agreement with the Missouri Highways and Transportation Commission, for intersection improvements at 15th Street and Rangeline Road in the City of Joplin, a true and accurate copy of said agreement being attached hereto and incorporated herein and the same is hereby approved.

Section 2. That the City Manager of the City of Joplin, Missouri, or his designee, is hereby authorized and directed to execute said agreement, or agreement in substantially similar form, by and on behalf of the City of Joplin with the Missouri Highways and Transportation Commission.

Section 3. That the City hereby declares that this Ordinance dealing with a public improvement, is an emergency within the meaning of Section 2.12(6) of the HOME RULE CHARTER of the City of Joplin, Missouri, and as such, this Ordinance shall become effective immediately upon its passage.

PASSED BY THE COUNCIL OF THE CITY OF JOPLIN, MISSOURI, this _____ day of_____, 2020, by a vote of_____.

Gary L. Shaw, Mayor

ATTEST:

Barbara J. Gollhofer, City Clerk

APPROVED AS TO FORM:

Peter C. Edwards, City Attorney

CITY OF JOPLIN
COUNCIL AGENDA ITEM

ITEM
Council Bill 2020-104 – approving a construction agreement with B-3 Contractors for construction of the NID IV Sidewalk 2019 project.

MEETING DATE
January 21, 2020

ORIGINATING DEPARTMENT
Public Works - Engineering

ATTACHMENTS
Location Map; Bid Tabulation; Agreement; Council Bill

REVIEWED BY
Director of Public Works: David K. Hertzberg, Director of Planning and Community Development: Troy Bolander, Director of Finance: Leslie Haase, City Attorney: Peter Edwards, Interim City Manager: Dan Pekarek

SUMMARY
This Council Bill authorizes the City Manager or his designee to enter into an agreement with B-3 Contractors, in the amount of Two Hundred Seventeen Thousand Six Hundred Fifty-Seven and 35/100 dollars ($217,657.35), for construction of the Neighborhood Improvement District 4 (NID IV) Sidewalk 2019 project.

BACKGROUND
The City has received authorization for the release of funds for the 2019 Community Development Block Grant (CDBG) funding for low and moderate-income neighborhoods. This program includes improvements to sidewalk, streets, curb & gutter, storm water, and sanitary sewer systems in designated neighborhoods. The NID IV Sidewalk 2019 project focuses on sidewalk and curb and gutter improvements in the designated neighborhood. NID IV boundaries are: Michigan avenue on the west, and McKee avenue on the east; Central street on the north and 4th street on the south. Funding was approved for neighborhood infrastructure projects in the 2019 Action Plans. Work will begin after the contract is approved and signed and is to be substantially completed by April 2, 2020.

DISCUSSION
In accordance with the City of Joplin's procurement policies, a request for proposals for construction of NID IV Sidewalk 2019 was advertised on December 8, 2019. 5 proposals were received and bids were opened on January 2, 2020 with B-3 Contractors selected as the lowest, most responsive bidder. The bid was below the Engineer's estimate. This improvement project focuses on improving sidewalks along Comingo avenue, 2nd street and 3rd street. The Infrastructure Improvement Fund to be used for the construction of the NID IV project will be reimbursed by CDBG funding.

FUNDING SOURCE

These payments are included in the FY 2019-20 budget of Infrastructure Improvement Fund and will be reimbursed by federal CDBG grant funds.

RECOMMENDATION

Staff recommends approval of this Council Bill No. 2020-104 on an Emergency basis; in that said ordinance provides for public improvements and is considered to be an emergency within the meaning of Section 2.12(6) of the HOME RULE CHARTER of the City of Joplin, Missouri, and as such, this Ordinance shall become effective immediately upon its passage.

NID IV Sidewalks 2019

Contractor	Bid
Engineer's Estimate	$328,352.00
B-3 Contractors	$217,657.35
D & E Plumbing and Heating	$243,541.00
Hunter Chase	$254,187.00
Branco Enterprises	$290,387.00
Jeff Asbell Excavating and Trucking	$291,899.00


Replace with new sidewalk
E 2ND ST
E JASPER ST
S SCHOOL AVE
S RAILROAD AVE
E 3RD ST
E 3RD ST
HIGAN AVE

COUNCIL BILL NO. 2020-104 ORDINANCE NO

AN ORDINANCE approving the City of Joplin to enter into a construction agreement with B-3 Contractors, in the amount of Two Hundred Seventeen Thousand Six Hundred Fifty-Seven and 35/100 dollars ($217,657.35) for construction of the NID IV Sidewalk 2019 Project; and authorizing the City Manager or his designee to execute the same by and on behalf of the City of Joplin; and containing an emergency clause.

BE IT ORDAINED BY THE COUNCIL OF THE CITY OF JOPLIN, as follows:

Section 1. That the said construction agreement by and between the City of Joplin and B-3 Contractors, in the amount of Two Hundred Seventeen Thousand Six Hundred Fifty-Seven and 35/100 dollars ($217,657.35) for construction of the NID IV Sidewalk 2019 project funded through the CDBG Entitlement grant, in the City of Joplin, Jasper County, a true and accurate copy of said agreement being attached hereto and incorporated herein, be, and the same is hereby approved.

Section 2. That the City Manager of the City of Joplin, Missouri, or his designee, is hereby authorized and directed to execute said agreement, or agreement in substantially similar form, by and on behalf of the City of Joplin.

Section 3. That upon the final approval and acceptance of the contractor's work under said contract, in substantial conformance with the attached agreement, in writing by the Director of Public Works and his certification to the effect to the Director of Finance, the contractor shall be paid from the Infrastructure Improvement Fund (305-4550-530-8635).

Section 4 That the City of Joplin hereby declares that this Ordinance relating to a public improvement is an emergency within the meaning of Section 2.12 (6) of the Home Rule Charter of the City of Joplin, Missouri, and the Council hereby declares that this ordinance shall be in full force and effect from and after its passage. Specifically, this council bill needs to be approved in order to allow construction to be completed within funding time limitations

Passed by the Council of the City of Joplin, Missouri, this _____ day of

_____, 2020 by a _____ vote.

_____

ATTEST: Gary L. Shaw, Mayor

_____

Barbara J. Gollhofer, City Clerk

APPROVED AS TO FORM:

_____

Peter C. Edwards, City Attorney

COUNCIL BILL 2020-104

I hereby certify that a sufficient amount is available in the Infrastructure Improvement Fund Account Number 305-4550-530-8635 to pay the amounts called for on the basis of the bids received by the City Engineer.

_____

Leslie Haase, Director of Finance

AGREEMENT
Between
CITY OF JOPLIN AND B-3 CONTRACTORS

CITY		CONTRACTOR	
CITY OF JOPLIN **602 S. MAIN STREET** **JOPLIN, MO 64801**		Name: B-3 Contractors, LLC Address: 1913 S Bluebell Lane JOPLIN MISSOURI 64801	
Attention: Steven Martinez		Attention: Brian Black	
Department: Public Works- Engineering		Phone: 417-726-5110	Fax:
Phone: 417-624-0820 extension 531	Fax:		

THIS AGREEMENT, made and entered into this_____day of_____, 20____, by the parties identified above.

WITNESSETH: That whereas, the Contractor has become the lowest responsible bidder for furnishing the supervision, labor, tools, equipment, materials and supplies and for constructing the following City improvements:

NID IV Sidewalks 2019

The City and Contractor agree to the following:

1. Manner and Time for Completion. The Contractor will furnish all supervision, labor, tools, equipment, materials and supplies necessary to perform, and to perform said work at Contractor's own expense in accordance with the contract documents and any applicable City ordinances and state and federal laws within 60 calendar days from the date Contractor is ordered to proceed, which order shall be issued by the Director of Public Works within 30 days after the date of this contract.

2. Prevailing Wages. The Contractor shall be required to pay their laborers and mechanics no less than the more stringent of either that required by the Department of Labor and Industrial Relations of the State of Missouri or the Department of Labor as defined in the Davis-Bacon Act.

a. Missouri Wage Rate: All labor utilized in the construction of the aforementioned improvements shall be paid a wage of no less than the "prevailing hourly rate of wages" for work of a similar character in this locality, as established and amended at any time by the Department of Labor and Industrial Relations of the State of Missouri. At any time the contractor is found to not have paid prevailing wages, the contractor shall forfeit as a penalty to the city one hundred dollars for each underpaid worker employed, for each calendar day, or portion thereof such worker is paid less than the said stipulated rates for any work done under this contract.

b. Davis Bacon: The Davis-Bacon Act (Title 40 U.S.C. Chapter 31, subchapter IV), requires that all contractors and subcontractors performing on federal contracts (and contractors or subcontractors performing on federally assisted contracts under the related Acts) in excess of $2,000 pay their laborers and mechanics not less than the prevailing wage rates and fringe benefits listed in the contract's Davis-Bacon wage determination for corresponding classes of laborers and mechanics employed on similar projects in the area. Davis-Bacon labor standards clauses must be included in covered contracts. Apprentices may be employed at less than predetermined rates if they are in an apprenticeship program registered with the Department of Labor or with a state apprenticeship agency recognized by the Department. Trainees may be employed at less than predetermined rates if they are in a training program certified by the Department. Contractors and subcontractors on prime contracts in excess of $100,000 are required, pursuant to the Contract Work Hours and Safety Standards Act, to pay employees one and one-half times their basic rates of pay for all hours over 40 worked on covered contract work in a workweek. Covered contractors and subcontractors are also required to pay employees weekly and to submit weekly certified payroll records to the contracting agency.

3. Insurance Requirements. Without limiting any of the other obligations or liabilities of the Contractor, the Contractor shall secure and maintain at its own cost and expense, throughout the duration of this Contract and until the work is completed and accepted by the City of Joplin, insurance of such types and in such amounts as may be necessary to protect it and the interests of the City of Joplin against all hazards or risks of loss as hereunder specified or which may arise out of the performance of the Contract Documents. The form and limits of such insurance, together with the underwriter thereof in each case, are subject to approval by the City of Joplin. Regardless of such approval, it shall be the responsibility of the contractor to maintain adequate insurance coverage at all times during the term of the Contract. Failure of the Contractor to maintain coverage shall not relieve it of any contractual responsibility or obligation or liability in general or under the Contract Documents.

The certificates of insurance, including evidence of the required endorsements hereunder or the policies, shall be filed with the City within ten (10) days after the date of the receipt of Notice of Award of the Contract to the Contractor and prior to the start of work. All insurance policies shall require that the insurance company in question provide thirty (30) days written notice prior to modification or cancellation of such insurance. Such notices shall be mailed, certified mail, return receipt requested, to:

City of Joplin - Public Works, 602 S. Main Street, Joplin, MO 64801

Such policies shall name the City as an additional insured, with limits of liability not less than the sovereign immunity limits for Missouri public entities calculated by the Missouri Department of Insurance as of January 1 each calendar year and published annually in the Missouri Register pursuant to Section 537.610, RSMo. (See, http://insurance.mo.gov/industry/sovimmunity.php)

As of January 1, 2020, the minimum coverage for the insurance referred to herein shall be as set out below:

a. Workers' Compensation…. Statutory coverage per RSMo 287.010 et seq

Employer's Liability……. $1,000,000.00

b. Commercial General Liability Insurance, including coverage for Premises, Operations, Products and Completed Operations, Contractual Liability, Broad Form Property Damage, Independent Contractors, Explosion, Collapse, and Underground Property Damage and endorsed for blasting if blasting required. Such coverage shall apply to bodily injury and property damage on an "Occurrence Form Basis" with limits of at least Two Million Nine Hundred Five Thousand Six Hundred Sixty-four and no/100 Dollars ($2,905,664.00 for all claims arising out of a single accident or occurrence and at least Four Hundred Thirty-five Thousand Eight Hundred Forty-Nine and no/100 Dollars ($435,849.00) with respect to injuries and/or death of any one person in a single occurrence and an amount not less than at least $1,000,000 for all claims to property arising out of a single occurrence and at least $100,000 to any one owner with respect to damages to property. Contractor agrees that the proceeds of such insurance policy shall first be used to pay any award, damages, costs, and/or attorneys' fees incurred by or assessed against City, its employees, officers and agents, before payment of any award, damages, costs or attorneys' fees of Contractor, its employees, officers or agents. Contractor agrees to cause its insurer to name City as an additional insured on such insurance policy, including the City as an additional insured for coverage under its products-completed operations hazard, and said policy shall be primary and noncontributory.

c. Automobile Liability Insurance covering bodily injury and property damage for owned, non-owned and hired vehicles, with limits of at least Two Million Nine Hundred Five Thousand Six Hundred Sixty-four and no/100 Dollars ($2,905,664.00 for all claims arising out of a single accident or occurrence and at least Four Hundred Thirty-five Thousand Eight Hundred Forty-Nine and

no/100 Dollars ($435,849.00) with respect to injuries and/or death of any one person in a single accident or occurrence.

d. Owner's and Contractor's Protective Liability Insurance to protect the City, its agents, servants and employees from claims which may arise from the performance of this Contract, with limits of at least Two Million Nine Hundred Five Thousand Six Hundred Sixty-four and no/100 Dollars ($2,905,664.00 for all claims arising out of a single accident or occurrence and at least Four Hundred Thirty-five Thousand Eight Hundred Forty-Nine and no/100 Dollars ($435,849.00) with respect to injuries and/or death of any one person in a single accident or occurrence.

The Owner's and Contractor's Protective Liability Insurance must:

(1) Be a separate policy with the named insured being: The City of Joplin, and

(2) Contain an endorsement that disclaims coverage for any claim barred by the doctrines of sovereign immunity or official immunity, except attorney's fees and other litigation costs incurred in defending a claim. Nothing contained in this policy (or this endorsement thereto) shall constitute any waiver of whatever kind of these defenses or sovereign immunity or official immunity for any monetary amount whatsoever.

e. Builders Risk Insurance for contracts involving unoccupied structures. The Contractor shall secure All Risk Builder's Risk Insurance. Unless specifically authorized by the City, the amount of such insurance shall not be less than the total contract price.

f. Subcontracts. In case any or all of this work is sublet, the Contractor shall require the subcontractor to procure and maintain all insurance required in subparagraphs (a), (b) and (c) hereof and in like amounts. Contractor shall require any and all subcontractors with whom it enters into a contract to perform work on this project to protect the City of Joplin through insurance against applicable hazards or risks and shall, upon request of the City, provide evidence of such insurance.

g. Notice. The Contractor and/or subcontractor shall furnish the City prior to beginning the work, the policy as specified in subparagraph (d), and satisfactory proof of carriage of all the insurance required by this contract, with the provision that policies shall not be canceled, modified or non-renewed without thirty (30) days written notice to the City of Joplin.

h. Legislative or Judicial Changes. In the event the scope or extent of the City's tort liability as a governmental entity as described in Section 537.600 through 537.650 RSMo is broadened or increased during the term of this agreement by legislative or judicial action, the City may require Contractor, upon 10 days written notice, to execute a contract addendum whereby the Contractor agrees to provide, at a price not exceeding Contractor's actual increased premium cost, additional liability insurance coverage as the City may require to protect the City from increased tort liability exposure as the result of such legislative or judicial action. Any such additional insurance coverage shall be evidenced by an appropriate certificate of insurance and shall take effect within the time set forth in the addendum.

4. Performance, Labor, and Materials Payment Bond: The Contractor shall furnish a Performance Bond and a Labor and Materials Payment Bond with surety approved by the City and on the forms approved by the City, each bond shall be in the amount of $217,657.35 (full amount of contract) conditioned upon the full and faithful performance of all major terms and conditions of this contract and payment of all labor and material suppliers. It is further mutually agreed between the parties hereto that if at any time after the execution of this agreement and the surety bond(s) hereto attached for its faithful performance and payment of labor and material suppliers, the City shall deem the surety or sureties upon such bond(s) to be unsatisfactory, or if, for any reason, such bond(s) ceases to be adequate to cover the performance of the work, the Contractor shall, at its expense, within five (5) days after the receipt of notice from the City to do so, furnish an additional bond or bonds, in such form and amount, and with such surety or sureties as shall be satisfactory to the City. In such event no further payment to the Contractor shall be deemed to be due under this contract until such new or additional security for the faithful performance of the work and the payment of labor and material suppliers shall be furnished in a manner and form satisfactory to the City. The corporate surety on any performance or payment bond must be licensed by the State of Missouri and if the required bond exceeds $25,000.00 must be listed in United States Treasury Circular 570.

5. Certification Regarding Disbarment, Eligibility, Indictments, Convictions or Civil Judgements for all Federal Aid Projects: By signing and submitting the bid, the president or authorized official of the bidder, under penalty of perjury under the laws of the USA, shall certify that, except as noted in the exceptions, the company or any person associated therewith in the capacity of owner, partner, director, officer, principal investor, project director, manager, auditor or any position involving the administration of federal funds:

(Reference can be made to “The System for Award Management” website as a helpful resource).

a. Is not currently under suspension, debarment, voluntary exclusion or determination of ineligibility by any federal agency.

b. Has not been suspended, debarred, voluntarily excluded or determined ineligible by any federal agency within the past three years.

c. Does not have a proposed debarment or suspension pending.

d. Has not been indicted, convicted or had a civil judgment rendered against any of the listed parties by a court of competent jurisdiction in any matter involving fraud or official misconduct within the past three years.

5.1 If there are any exceptions, the bidder shall submit the exceptions on company letterhead, signed by the bidder and inserted inside the bid submitted. Exceptions will not necessarily result in denial of award, but will be considered in determining bidder responsibility. For any exception noted, the bidder shall indicate to whom it applies, the initiating agency, and dates of action. Providing false information may result in criminal prosecution or administrative sanctions.

5.2 By signing the contract, the contractor shall further certify that all related subcontracts of $25,000 shall comply with this requirement. This includes all subcontractors, material suppliers and vendors.

6. Contractor's Responsibility for Subcontractors.

a. The Contractor shall be as fully responsible to the City for the acts and omissions of its subcontractors, and of persons either directly or indirectly employed by them, as Contractor is for the acts and omissions of persons it directly employs.

b. Contractor shall cause appropriate provisions to be inserted in all subcontracts relating to this work, to bind all subcontractors to Contractor by all the terms herein set forth, and insofar as applicable to the work of subcontractors and to give Contractor the same power regarding termination of any subcontract as the City may exercise over Contractor under any provisions of this contract.

c. Nothing contained in this contract shall create any contractual relation between the subcontractor and the City or between any subcontractors.

d. The Contractor shall not enter into any subcontract with any subcontractor who has been debarred, suspended, declared ineligible, or voluntarily excluded from participating in contacting programs by any agency of the United States Government or the City of Joplin.

e. The Contractor represents and warrants that it and its subcontractors are not debarred, suspended, or placed in ineligibility status under the provisions of 24 CFR 24 (government debarment and suspension regulations).

7. General Independent Contractor Clause. This agreement does not create an employee/employer relationship between the parties. It is the parties' intention that the Contractor will be an independent contractor and not the City's employee for all purposes, including, but not limited to, the application of the Fair Labor Standards Act minimum wage and overtime payments, Federal Insurance Contribution Act, the Social Security Act, the Federal Unemployment Tax Act, the provisions of the Internal Revenue Code, Missouri Revenue and Taxation laws, Missouri Workers' Compensation and Unemployment Insurance laws. The Contractor will retain sole and absolute discretion in the judgment of the manner and means of carrying out the Contractor's activities and responsibilities hereunder. The Contractor agrees that it is a separate and independent enterprise from the public employer, that it has a full opportunity to find other business, that it has made its own investment in its business, and that it will utilize a high level of skill necessary to perform the work. This agreement shall not be construed as creating any joint employment relationship between the Contractor and the City, and the City will not be liable for any obligation incurred by the Contractor, including but not limited to unpaid minimum wages and/or overtime premiums.

8. Personnel. The Contractor represents that it has, or will secure at its own expense, all personnel required in performing the services under this Contract. Such personnel shall not be employees of or have any contractual relationship with the Owner. All the services required hereunder will be performed by the Contractor or under its supervision, and all personnel engaged in the work shall be fully qualified and shall be authorized or permitted under State and local law to perform such services. No person who is serving sentence in a penal or correctional institution shall be employed on work under this Contract.

9. Changes. The Owner may, from time to time, request changes in the scope of the services of the Contractor to be performed hereunder. Such changes, including any increase or decrease in the amount of the Contractor’s compensation which are

mutually agreed upon by and between the Owner and the Contractor, shall be incorporated in written and executed amendments to this Contract.

10. Breach of Contract Terms. Any violation or breach of terms of this contract on the part of the Contractor or the Contractor's subcontractors may result in the suspension or termination of this contract or such other action that may be necessary to enforce the rights of the parties of this contract. The duties and obligations imposed by the contract documents and the rights and remedies available thereunder shall be in addition to and not a limitation of any duties, obligations, rights and remedies otherwise imposed or available by law.

11. Liquidated Damages. Time of completion of work by the Contractor is of the essence. Should Contractor, or in the case of default, the surety, fail to complete the work within the time specified in the contract, or within such extra time as may be allowed in accordance with City of Joplin Standard Specifications, Division 0000, General Requirements and Provisions, Section 0400.19, Contractor (or surety) shall be liable to the City in the amount of $1000.00 per day for each and every calendar day that the contract remains uncompleted after the time allowed for completion, as liquidated damages, and not as a penalty, it being stipulated that actual damages to the City and the public arising from Contractor's failure to timely complete the work would be difficult, if not impossible, to ascertain. The amount assessed as liquidated damages may be withheld from any moneys otherwise due to Contractor from the City.

12. Termination. The City reserves the right to terminate this contract by giving at least five (5) days prior written notice to the Contractor, without prejudice to any other rights or remedies of the City should the Contractor be adjudged a bankrupt, or if Contractor should make a general assignment for the benefit of its creditors, or if a receiver should be appointed for Contractor or for any of its property, or if Contractor should persistently or repeatedly refuse or fail to supply enough properly skilled workmen or proper material, or if Contractor should refuse or fail to make prompt payment to any person supplying labor or materials for the work under the contract, or persistently disregard instructions of the City or fail to observe or perform any provisions of the contract. If, through any cause, the Contractor shall fail to fulfill in a timely and proper manner his obligations under this contract, or if the Contractor shall violate any of the covenants, agreements, or stipulations of this contract, the Owner shall thereupon have the right to terminate this contract by giving written notice to the Contractor of such termination and specifying the effective date thereof, at least five (5) days before the effective date of such termination. In such event, all finished or unfinished documents, data, studies, surveys, drawings, maps, models, photographs, and reports prepared by the Contractor under this contract shall, at the option of the Owner, become the Owner's property and the Contractor shall be entitled to receive just and equitable compensation for any work satisfactorily completed hereunder. Notwithstanding the above, the Contractor shall not be relieved of liability to the Owner for damages sustained by the Owner by virtue of any breach of the contract by the Contractor, and the Owner may withhold any payments to the Contractor for the purpose of set-off until such time as the exact amount of damages due the Owner from the Contractor is determined.

13. City's Right to Proceed. In the event this contract is terminated pursuant to Paragraph 8, then the City may take over the work and prosecute the same to completion, by contract or otherwise, and Contractor and its sureties shall be liable to the City for any costs over the amount of this contract thereby occasioned by the City. In any such case, the City may take possession of, and utilize in completing the work, such materials, appliances and structures as may be on the work site and are necessary for completion of the work. The foregoing provisions are in addition to, and not in limitation of, the rights of the City under any other provisions of the contract, city ordinances, and state and federal laws.

14. Termination for Convenience of City. The City shall have the right at any time by providing at least ten (10) days written notice to Contractor to terminate and cancel this contract, without cause, for the convenience of the City, and Contractor shall immediately stop work. In such event City shall not be liable to Contractor except for payment for actual work performed prior to such notice in an amount proportionate to the completed contract price and for the actual costs of preparations made by Contractor for the performance of the cancelled portions of the contract, including a reasonable allowance of profit applicable to the actual work performed and such preparations. Anticipatory profits and consequential damages shall not be recoverable by Contractor.

15. Guards and Lights. The Contractor agrees that during the performance of said work, adequate barricades, guards and warning signs, lights or devices consistent with the requirements contained in the Manual on Uniform Traffic Control Devices shall be provided by Contractor during construction.

16. Energy Efficiency. The Contractor shall comply with mandatory standards and policies relating to energy efficiency which are contained in the state energy conservation plan issued in compliance with the Energy Policy and Conservation Act (Public Law 94-163).

17. Liability and Indemnity.

a. In no event shall the City be liable to the Contractor for special, indirect, or consequential damages, except those caused by the City's gross negligence or willful or wanton misconduct arising out of or in any way connected with a breach of this contract. The maximum liability of the City shall be limited to the amount of money to be paid or received by the City under this contract.

b. The Contractor shall defend, indemnify and save harmless the City, its elected or appointed officials, agents and employees from and against any and all liability, suits, damages, costs (including attorney fees), losses, outlays and expenses from claims in any manner caused by, or allegedly caused by, or arising out of, or connected with, this contract, or the work or any subcontract thereunder (the Contractor hereby assuming full responsibility for relations with subcontractors), including, but not limited to, claims for personal injuries, death, property damage, or for damages from the award of this contract to Contractor, notwithstanding any possible negligence, whether sole or concurrent, on the part of the City, its officials, agents and employees.

c. The Contractor shall indemnify and hold the City harmless from all wages or overtime compensation due any employees in rendering services pursuant to this agreement or any subcontract, including payment of reasonable attorneys' fees and costs in the defense of any claim made under the Fair Labor Standards Act, the Missouri Prevailing Wage Law or any other federal or state law. The City can require additional documentation as needed to ensure that the appropriate wage rates are being paid in order to ensure compliance to all state and federal rules, regulations and statutes.

d. The indemnification obligations of Contractor hereunder shall not be limited by any limitations as to the amount or type of damages, compensation or benefits payable by or for the Contractor, under any federal or state law, to any person asserting the claim against City, its elected or appointed officials, agents and employees, for which indemnification is sought.

e. The indemnification obligations herein shall not negate, abridge or reduce in any way any additional indemnification rights of the City, its elected or appointed officials, agents and employees, which are otherwise available under statute, or in law or equity.

f. Contractor affirms that it has had the opportunity to recover the costs of the liability insurance required in this agreement in its contract price. Contractor's obligation under this agreement to defend, indemnify, and hold harmless any person from that person's own negligence or wrongdoing is limited to the coverage and limits of the applicable insurance required of the Contractor under this agreement.

g. The Contractor shall indemnify and hold the City harmless for any penalties, fines, fees or costs, including costs of defense, which are charged or assessed by any Federal, state or local agency including, but not limited to, Environmental Protection Agency or Department of Natural Resources.

h. The Contractor shall hold and save the Owner and its officers, agents, servants, and employees harmless from liability of any nature or kind, including cost and expenses for, or on account of any patented or unpatented invention, process, article, or appliance manufactured or used in the performance of the contract including its use by the Owner, unless otherwise specifically stipulated in the Contract Document.

i. License or Royalty Fees: License and/or Royalty Fees for the use of a process which is authorized by the Owner of the project must be reasonable, and paid to the holder of the patent, or his authorized license, direct by the Owner and not by or through the Contractor.

j. If the Contractor uses any design device or materials covered by letters, patent or copyright, he shall provide for such use by suitable agreement with the owner of such patented or copy- righted design device or material. It is mutually agreed and understood, that without exception the contract prices shall include all royalties or costs arising from the use of such design, device or materials, in any way involved in the work. The Contractor and/or his Sureties shall indemnify and save harmless the Owner of the project from any and all claims for infringement by reason of the use of such patented or copy-righted design, device or materials or any trademark or copy-right in connection with work agreed to be performed under this contract, and shall indemnify the Owner for any cost,

expense, or damage which it may be obliged to pay by reason of such infringement at any time during the prosecution of the work or after completion of the work.

18. Copyright. No materials, to include but not limited to reports, maps, or documents produced as a result of this contract, in whole or in part, shall be available to the Contractor for copyright purposes. Any such materials produced as a result of this contract that might be subject to copyright shall be the property of the Owner and all such rights shall belong to the Owner.

19. Payment for Labor and Materials. The Contractor agrees and binds itself to pay for all labor done, and for all the materials used in the construction of the work to be completed pursuant to this contract.

20. Payment. The City will pay the Contractor in accordance with the rate set forth in the contract documents on file in the Public Works Department and by this reference made a part hereof, which shall constitute full and complete compensation for the Contractor's work provided hereunder. Such compensation will be paid in progress payments (less five (5) percent retainage), as established by the City, subject to receipt of a requisition for payment and a statement of work provided by the Contractor and agreement by both the City and the Contractor that the Contractor has fully performed the work to be paid for in such progress payments in conformance with the contract. If the City or the architect or engineer determines that a higher rate of retainage is required to ensure performance of the contract, the City may withhold up to ten (10) percent retainage until the work is fully completed and accepted by the City.

21. Contract Documents. The contract documents shall consist of the following:

a. This Contract
b. All Change Orders
c. Bid Plans and Specifications
d. City of Joplin Standard Specifications (Latest Revised Edition)
e. Special Conditions & Provisions
f. Proposal
g. Statement of Bidder's Qualifications
h. Acknowledgment
i. Performance Bond
h. Payment and Material Bond
k. Instructions to Bidders
l. Non-collusion Affidavit
m. Notice to Proceed

Notice to Contractors: This contract, together with the other documents enumerated in this paragraph, forms the contract between the parties. These documents are as fully a part of the contract as if attached hereto or repeated herein. The Contractor agrees to perform all of the work described in the contract documents and to comply with the terms and conditions defined therein for a total sum of Two Hundred Seventeen Thousand Six Hundred Fifty-Seven and 35/100 dollars ($217,657.35), said amount being subject to any approved addenda or change order.

22. Subsurface Conditions. Contractor agrees that information contained in the published reports and public actions of the Missouri Division of Geology and Land Survey shall be conclusive and binding upon the Contractor as to what subsurface conditions at the job site are reasonably anticipated or reasonably foreseeable. Contractor acknowledges and agrees that it shall not be entitled to any adjustment in the Contract Sum or Contract Times for any concealed condition of any nature, including but not limited to unknown physical conditions of an unusual nature which differ materially from those ordinarily found to exist and generally recognized as inherent in construction activities of the character provided for in the Contract Documents, in addition to the information contained in the published reports and public actions of the Missouri Division of Geology and Land Survey. Contractor recognizes that it has assumed the risks of concealed conditions and is being compensated for assuming these risks.

23. Flood Disaster Protection: This contract is subject to the requirements of the Flood Disaster Protection Act of 1973 (P.L.93-234). Nothing included as a part of this contract is approved for acquisition or construction purposes as defined under Section 3(a) of said Act, for use in an area identified by the Secretary of HUD as having special flood hazards which is located in a community not then in compliance with the requirements for participation in the National Flood Insurance Program pursuant to Section 201(d) of said Act; and the use of any assistance provided under this contract for such acquisition for construction in such identified areas in communities then participating in the National Flood Insurance Program shall be subject to the mandatory

purchase of flood insurance requirements or Section 102(a) of said Act. Any contract or agreement for the sale, lease, or other transfer of land acquired, cleared or improved with assistance provided under this Contract shall contain, if such land is located in an area identified by the Secretary as having special flood hazards and in which the sale of flood insurance has been made available under the National Flood Insurance Act of 1968, as amended, 42 U.S.C. 4001 et seq., provisions obligating the transferee and its successors or assigns to obtain and maintain, during the ownership of such land, such flood insurance as required with respect to financial assistance for acquisition or construction purposes under Section 102(a) of Flood Disaster Protection Act of 1973.

24. Environmental Compliance (24 CFR 85.36(i)(12)): The Contractor must comply with all applicable standards, orders, or requirements issued under Section 306 of the Clean Air Act (42 USC 1857 (H)), Section 508 of the Clean Water Act (33 USC 1368), Executive Order 11738, and Environmental Protection Agency regulations (40 CFR, Part 15) prohibiting the use of facilities included on the EPA List of Violating Facilities.

In addition to the foregoing requirements, all nonexempt contractors and subcontractors shall furnish to the owner, the following:

a) A stipulation by the Contractor or subcontractors, that any facility to be utilized in the performance of any nonexempt contract or subcontract, is not listed on the List of Violating Facilities issued by the Environmental Protection Agency (EPA) pursuant to 40 CFR Part 15, as amended.

b) Agreement by the Contractor to comply with all the requirements of Section 114 of the Clean Air Act, as amended, (42 USC 1857 c-8) and Section 308 of the Federal Water Pollution Control Act, as amended, (33 USC 1318) relating to inspection, monitoring, entry, reports and information, as well as all other requirements specified in said Section 114 and Section 308, and all regulations and guidelines issued thereunder.

c) A stipulation that as a condition for the award of the contract, prompt notice will be given of any notification received from the Director, Office of Federal Activities, EPA, indicating that a facility utilized, or to be utilized for the contract, is under consideration to be listed on the EPA List of Violating Facilities.

d) Agreement by the Contractor that he will include, or cause to be included, the criteria and requirements in paragraph (1) through (4) of this section in every nonexempt subcontract and requiring that the Contractor will take such action as the government may direct as a means of enforcing such provisions.

25. Conflict of Interest. In accepting this contract, Contractor certifies that no member or officer of its firm or corporation is an officer or employee of the City of Joplin, Missouri, or any of its boards or agencies, and further that no officer or employee of the City has any financial interest, direct or indirect, in this contract. All applicable federal regulations and provisions of R.S.Mo. Section 105.450 et seq. shall not be violated.

a. The Contractor covenants that he presently has no interest and shall not acquire any interest direct or indirect in the above described project or any parcels therein or any other interest which would conflict in any manner or degree with the performance of his services hereunder. The Contractor further covenants that in the performance of this Contract no person having any such interest shall be employed.

26. Assignment. The Contractor shall not assign any interest in this contract, and shall not transfer any interest in the same (whether by assignment or novation), without prior written consent of the City thereto, provided, however, that claims for money due or to become due to the Contractor from the City under this Contract may be assigned to a bank, trust company, or other financial institution without such approval. Notice of such assignment or transfer shall be furnished in writing promptly to the City and the bond surety. Any such assignment is expressly subject to all rights and remedies of the City under this agreement, including the right to change or delete activities from the Contract or to terminate the same as provided herein, and no such assignment shall require the City to give any notice to any such assignee of any actions which the City may take under this agreement.

27. Anti-Lobbying: The Contractor shall ensure that no federal appropriated funds have been paid or will be paid, by or on behalf of the undersigned, to any person for influencing or attempting to influence an officer or employee of any agency, a Member of Congress, an officer or employee of Congress, or an employee of a Member of Congress in connection with the awarding of any federal contract, the making of any federal grant, the making of any federal loan, the entering into of any cooperative agreement, and the extension, continuation, renewal, amendment, or modification of any federal contract, grant, loan, or cooperative agreement.

a. The Contractor will comply with the provisions of the Hatch Act (5 U.S.C. 1501 et seq.), which limits the political activity of employees.

b. If any funds other than federally appropriated funds have been paid or will be paid to any person for influencing or attempting to influence an officer or employee of any agency, a member of Congress, an officer or employee of Congress, or an employee of a member of Congress in connection with this federal contract, grant, loan, or cooperative agreement, the contractor shall complete and submit Standard Form-LLL, "Disclosure Form to Report Lobbying," in accordance with its instructions.

28. Anti-Kickback Back Rules. Salaries of personnel performing work under this Contract shall be paid unconditionally and not less often than once a month without payroll deduction or rebate on any account except only such payroll deductions as are mandatory by law or permitted by the applicable regulations issued by the Secretary of Labor pursuant to the "Anti-Kickback Act" of June 13, 1934 (48 Stat. 948; 62 Stat. 740; 63 Stat. 108; Title 18 U.S.C. 874; and Title 40 U.S.C. 276c). The Contractor shall comply with all applicable "Anti-Kickback" regulations and shall insert appropriate provisions in all subcontracts covering work under this contract to insure compliance by the subcontractors with such regulations, and shall be responsible for the submission of affidavits required of subcontractors thereunder except as the Secretary of Labor may specifically provide for variations of or exemptions from the requirements thereof.

29. Nondiscrimination. The Contractor agrees in the performance of this contract not to discriminate on the ground or because of race, creed, color, national origin or ancestry, sex, religion, handicap, age, status as a protected veteran or status as a qualified individual with a disability, or political opinion or affiliation, against any employee of Contractor or applicant for employment and shall include a similar provision in all subcontracts let or awarded hereunder. The parties hereby incorporate the requirements of 41 C.F.R. §§ 60-1.4(a)(7), 29 C.F.R. Part 471, Appendix A to Subpart A, 41 C.F.R. § 60-300.5(a)ii and 41 C.F.R. § 60-741.5(a), if applicable.

a. This contractor and subcontractor shall abide by the requirements of 41 C.F.R. § 60-300.5(a). This regulation prohibits discriminations against qualified protected veterans, and requires affirmative action by covered prime contractors and subcontractors to employ and advance in employment qualified protected veterans.

b. This contractor and subcontractor shall abide by the requirements of 41 C.F.R. § 60-741.5(a). This regulation prohibits discrimination against qualified individuals on the basis of disability, and requires affirmative action by covered prime contractors and subcontractors to employ and advance in employment qualified individuals with disabilities.

c. No person with responsibilities in operation of the project to which this grant relates will discriminate with respect to any program participant or any applicant for participation in such program because of political affiliation or beliefs.

30. Nonresident/Foreign Contractors. The Contractor shall procure and maintain during the life of this contract:

a. If the Contractor is a foreign corporation, a certificate of authority to transact business in the State of Missouri from the Secretary of State, unless exempt pursuant to the provisions of Section 351.570 R.S.Mo.

b. A certificate from the Missouri Director of Revenue evidencing compliance with the transient employer financial assurance law, unless exempt pursuant to the provisions of Section 285.230 RSMo.

31. Notices. All notices required or permitted hereinunder and required to be in writing may be given by FAX or by first class mail addressed to City and Contractor at the addresses shown above. The date of delivery of any notice given by mail shall be the date falling on the second full day after the day of its mailing. The date of delivery of notice by FAX transmission shall be deemed to be the date transmission occurs, except where the transmission is not completed by 5:00 p.m. on a regular business day at the terminal of the receiving party, in which case the date of delivery shall be deemed to fall on the next regular business day for the receiving party.

32. Statement that Project Federally Funded: It is understood that this contract is funded in whole or in part with CDBG-DR funds through the City of Joplin Community Development Block Grant Program as administered by COMMERCE and is subject to those regulations and restrictions normally associated with federally-funded programs and any other requirements that the state may prescribe.

33. Records and Audits. The Contractor shall maintain accounts and records, including personnel, property, and financial records, adequate to identify and account for all costs pertaining to the Contract and such other records as may be deemed necessary by the City to assure proper accounting for all project funds. These records will be made available for audit purposes to the City or any authorized representative, and will be retained for five years after the expiration of this Contract. The City of Joplin, the Department

of Housing and Urban Development, the Comptroller General of the United States, or any of their duly authorized representatives, shall have access to any books, documents, papers and records of the Contractor which are directly pertinent to this specific contract, for the purpose of audits, examinations, and making excerpts and transcriptions.

a. All of the reports, information, data, etc., prepared or assembled by the Contractor under this Contract are confidential, and the Contractor agrees that they shall not be made available to any individual or organization without prior written approval of the Owner.

34. General Independent Contractor Clause. This agreement does not create an employee/employer relationship between the parties. It is the parties' intention that CONTRACTOR will be an independent contractor and not the City's employee for all purposes, including, but not limited to, the application of the Fair Labor Standards Act minimum wage and overtime payments, Federal Insurance Contribution Act, the Social Security Act, the Federal Unemployment Tax Act, the provisions of the Internal Revenue Code, Missouri revenue and taxation laws, Missouri workers' compensation and unemployment insurance laws. CONTRACTOR will retain sole and absolute discretion in the judgment of the manner and means of carrying out CONTRACTOR's activities and responsibilities hereunder. CONTRACTOR agrees that it is a separate and independent enterprise from the public employer, that it has a full opportunity to find other business, that it has made its own investment in its business, and that it will utilize the skill necessary to perform the work. This agreement shall not be construed as creating any joint employment relationship between CONTRACTOR and the City, and the City will not be liable for any obligation incurred by CONTRACTOR, including but not limited to unpaid minimum wages and/or overtime premiums.

35. Equal Employment Opportunity. During the performance of this Contract, the Contractor agrees as follows:

a) The Contractor will not discriminate against any employee or applicant for employment because of race, creed, color, national origin, religion, or sex. The Contractor will take affirmative action to ensure that applicants are employed, and that employees are treated during employment, without regard to their race, creed, color, national origin, religion, or sex. Such action shall include, but not be limited to, employment, upgrading, demotion, or transfer; recruitment or recruitment advertising; layoff or termination; rates of pay or other forms of compensation; and selection for training, including apprenticeship. The Contractor agrees to post in conspicuous places, available to employees and applicants for employment, notices to be provided by the City setting forth the provisions of this non-discrimination clause.

b) The Contractor will, in all solicitation or advertisements for employees placed by or on behalf of the Contractor, state that all qualified applicants will receive consideration for employment without regard to race, creed, color, national origin, religion, or sex.

c) The Contractor will cause the foregoing provisions to be inserted in all subcontracts for any work covered by this Contract so that provisions will be binding upon each subcontractor, provided that the foregoing provisions shall not apply to contracts or subcontracts for standard commercial supplies or raw materials.

d) The Contractor will comply with all provisions of Executive Order 11246 of September 24, 1965, and of the rules, regulations, and relevant orders of the Secretary of Labor.

e) The Contractor will furnish all information and reports required by Executive Order 11246 of September 24, 1965, and by the rules, regulations, and orders of the Secretary of Labor, or pursuant thereto, and will permit access to his books, records, and accounts by the City and the Secretary of Labor for purposes of investigation to ascertain compliance with such rules, regulations, and orders.

f) The Contractor shall ensure that the hours of minority and female employment and training must be substantially uniform throughout the length of the contract and throughout each trade. The Contractor shall make a good faith effort to employ minorities and women evenly on each of its projects. The transfer of minority or female employees or trainees from contractor to contractor or from project to project for the sole purpose of meeting the Contractor's goals shall be a violation of the contract, the Executive Order and the regulations in 41 CFR 60-4. Compliance with the goals will be measured against the total work hour performed.

g) In the event of the Contractor's noncompliance with the non-discrimination clauses of this Agreement or with any of such rules, regulations, or orders, this Agreement may be canceled, terminated, or suspended in whole or in part, and the Contractor may be declared ineligible for further Government contracts in accordance with procedures authorized in Executive Order 11246 of September 24, 1965, and such other sanctions may be imposed and remedies invoked as provided in Executive Order 11246 of September 24, 1965, or by rule, regulation, or order of the Secretary of Labor, or as otherwise

provided by law.

h) The Contractor will include the provisions of paragraphs (a) through (g) in every subcontract or purchase order unless exempted by rules, regulations, or orders of the Secretary of Labor issued pursuant to Section 204 Executive Order 11246 of September 24, 1965, so that such provisions will be binding upon each subcontractor or vendor. The Contractor will take such action with respect to any subcontract or purchase order as the City may direct as a means of enforcing such provisions including sanctions for noncompliance. Provided, however, that in the event the Contractor becomes involved in, or is threatened with, litigation with a subcontractor or vendor as a result of such direction by the City, the Contractor may request the United States Government to enter into such litigation to protect the interests of the United States.

36. Women and Minority Business: The Contractor will use its best efforts to afford small businesses, minority business enterprises, women's business enterprises (including Section 3 businesses) and veteran –owned businesses the maximum practicable opportunity to participate in the performance of this contract. As used in this contract, the terms "small business" means a business that meets the criteria set forth in section 3(a) of the Small Business Act, as amended (15 U.S.C. 632), and "minority and women's business enterprise" means a business at least fifty-one (51) percent owned and controlled by minority group members or women. For the purpose of this definition, "minority group members" are Afro-Americans, Spanish-speaking, Spanish surnamed or Spanish-heritage Americans, Asian-Americans and American Indians. The Sub recipient and/or borrower may rely on written representations by businesses regarding their status as minority and female business enterprises in lieu of an independent investigation. The contractor must demonstrate to the City of Joplin's satisfaction that a good faith effort was made to ensure that minorities and women have been afforded equal opportunity to gain employment under the City of Joplin contract with the contractor. Payment may be withheld from a contractor's contract for failure to comply with these provisions.

a) Evidence of a "good faith effort" includes, but is not limited to:
b) The Contractor shall recruit prospective employees through the State Job bank website, managed by the Department of Labor and Workforce Development,
c) The Contractor shall keep specific records of its efforts, including records of all individuals interviewed and hired, including the specific numbers of minorities and women;
d) The Contractor shall actively solicit and shall provide the City of Joplin with proof of solicitations for employment, including but not limited to advertisements in general circulation media, professional service publications and electronic media.

37. Civil Rights Act of 1964. Under Title VI of the Civil Rights Act of 1964, no person shall, on the grounds of race, color, or national origin, be excluded from participation in, be denied the benefits of, or be subjected to discrimination under any program or activity receiving Federal financial assistance.

38. Section 3 of the Housing and Urban Development Act of 1968

a) The work to be performed under this contract is subject to the requirements of Section 3 of the Housing and Urban Development Act of 1968, as amended, 12 U.S.C. 1701u. Section 3 requires that to the greatest extent feasible, opportunities for training and employment be given to lower income residents of the project area and contracts for work, in connection with the project, be awarded to business concerns which are located in, or owned in substantial part by, persons residing in the area of the project.
b) The parties to this contract will comply with the provision of said Section 3 and the regulations issued pursuant thereto by the Secretary of Housing and Urban Development set forth in 24 CFR 135, and all applicable rules and orders of the Department issued thereunder prior to the execution of this contract. The parties to this contract certify and agree that they are under no contractual or other disability that would prevent them from complying with these requirements.
c) The consultant will send to each labor organization or representative of workers, if applicable, with which he has a collective bargaining agreement or other contract or understanding, if any, a notice advising the said labor organization or workers' representative of his commitments under this Section 3 clause, and shall post copies of the notice in conspicuous place available to employees and applicants for employment or training.
d) The consultant will include this Section 3 clause in every subcontract for work, if applicable, in connection with the

project and will, at the direction of the applicant for or recipient of Federal financial assistance, take appropriate action pursuant to the subcontract upon a finding that the subcontractor is in violation of regulations issued by the Secretary of Housing and Urban Development, 24 CFR Part 135. The contractor will not subcontract with any subcontractor where it has notice or knowledge that the latter has been found in violation of regulations under 24 CFR Part 135 and will not let any subcontract unless the subcontractor has first provided it with a preliminary statement of ability to comply with the requirements of these regulations.

e) Compliance with the provisions of Section 3, the regulations set forth in 24 CFR Part 135, and all applicable rules and orders of the Department issued hereunder prior to the execution of the contract, shall be a condition of the Federal financial assistance provided to the project, binding upon the applicant or recipient for such assistance, its successors and assigns. Failure to fulfill these requirements shall subject the applicant or recipient, its contractors and subcontractors, and its successors and assigns to those sanctions specified by the grant or loan agreement or contract through which Federal assistance is provided, and to such sanctions as are specified by 24 CFR Part 135.

39. Section 109(a) of the Housing and Community Development Act of 1974. No person in the United States shall on the grounds of race, color, national origin, religion, or sex be excluded from participation in, be denied the benefits of, or be subjected to discrimination under any program or activity funded in whole or in part with funds made available under this title. Any prohibition against discrimination on the basis of age under the Age Discrimination Act of 1975, or with respect to an otherwise qualified handicapped individual as provided in Section 504 of the Rehabilitation Act of 1973, as amended, shall also apply to any such program or activity.

40. Section 110 of the Housing and Community Development Act of 1974

a) All laborers and mechanics employed by contractors or subcontractors in the performance of construction work financed in whole or in part with assistance received under this chapter shall be paid wages at rates not less than those prevailing on similar construction in the locality as determined by the Secretary of Labor in accordance with the Davis-Bacon Act, as amended (40 U.S.C. 276a--276a-5): Provided, That this section shall apply to the rehabilitation of residential property only if such property contains not less than 8 units. The Secretary of Labor shall have, with respect to such labor standards, the authority and functions set forth in Reorganization Plan Numbered 14 of 1950 (15 F.R. 3176; 64 Stat. 1267) and section 276c of title 40.

b) Subsection (a) of this section shall not apply to any individual that--

i. performs services for which the individual volunteered;
ii. does not receive compensation for such services; or
iii. is paid expenses, reasonable benefits, or a nominal fee for such services; and
iv. is not otherwise employed at any time in the construction work.

41. Affirmative Action for Handicapped Workers (Section 503 of the Rehabilitation Act of 1973 (USC793))

a) The Contractor will not discriminate against any employee or applicant for employment because of physical or mental handicap in regard to any position for which the employee or applicant for employment is qualified. The Contractor agrees to take affirmative action to employ, advance in employment, and to otherwise treat qualified handicapped individuals without discrimination based upon their physical or mental handicap in all employment practices, such as employment upgrading, demotion or transfer, recruitment, advertising, layoff or termination, rates of pay or other forms of compensation, and selection for training including apprenticeship.

b) The Contractor agrees to comply with the rules, regulations, and relevant orders of the Secretary of Labor issued pursuant to the Act.

c) In the event of the Contractor's noncompliance with the requirements of this clause, actions for noncompliance may be taken in accordance with the rules, regulations, and relevant orders of the Secretary of Labor issued pursuant to the Act.

d) The Contractor agrees to post in conspicuous places, available to employees and applicants for employment, notices in a form to be prescribed by the Director, provided by or through the contracting officer. Such notices shall state the contractor's obligation under the law to take affirmative action to employ and advance in employment qualified handicapped employees and applicants for employment, and the rights of the applicants and employees.

e) The Contractor will notify each labor union or representative of workers with which it has a collective bargaining agreement or other contract understanding, that the contractor is bound by terms of Section 503 of the Rehabilitation Act of 1973 and is committed to take affirmative action to employ and advance in employment physically and mentally handicapped individuals.

f) The Contractor will include the provisions of this clause in every subcontract or purchase order of $2,500 or more unless exempted by rules, regulations, or orders of the Secretary issued pursuant to Section 503 of the Act, so that such provisions will be binding upon each subcontractor or vendor. The Contractor will take such action with respect to any subcontractor or purchase order as the Director of the Office of Federal Contract Compliance Programs may direct to enforce such provisions, including action for noncompliance.

42. Section 504 of the Rehabilitation Act of 1973, as amended, provides for nondiscrimination of an otherwise qualified individual solely on the basis of his handicap in benefiting from any program or activity receiving Federal financial assistance. All recipients must certify to compliance with all provisions of this Section.

43. Age Discrimination Act of 1975. No person in the United States, on the basis of age, be excluded from participation in, be denied benefits of, or be subjected to discrimination under, any program or activity receiving Federal financial assistance.

44. Authorized Employees. Contractor acknowledges that Section285.530, RSMo, prohibits any business entity or employer from knowingly employing, hiring for employment, or continuing to employ an unauthorized alien to perform work within the State of Missouri. Contractor therefore covenants that is not knowingly in violation of subsection 1 or Section 285.530, RSMo, and that it will not knowingly employ, hire for employment, or continue to employ any unauthorized aliens to perform work on the Project, and that its employees are lawfully to work in the United States.

45. Interest of Contractor and Employees. The Contractor covenants that he/she presently has no interest and shall not acquire interest, direct or indirect, in the study area or any parcels therein or any other interest which would conflict in any manner or degree with the performance of his services hereunder. The Contractor further covenants that in the performance of this Contract, no person having any such interest shall be employed.

46. Conflict of Interest.

a) No member of the governing body of the City and no other officer, employee, agent of the City and no other public official of the locality while employed or for one year thereafter, who exercises any functions or responsibilities in connection with the planning and carrying out of the program, shall have any personal financial interest, direct or indirect, in this Contract, and the Contractor shall take appropriate steps to assure compliance.

b) No member of or delegate to Congress, or Resident Commissioner, shall be admitted to any share or part of this contract or to any benefit that may arise therefrom.

47. Affidavit for Contracts Over $5,000.00. That pursuant to Missouri Revised Statute Sections 285.525 through 285.550, if this contract exceeds the amount of $5,000.00 and Contractor is associated with a business entity, Contractor shall provide an acceptable notarized affidavit stating that the associated business entity is enrolled in and participates in a federal work authorization program with respect to the employees working in connection with the contracted services, and that said business entity does not knowingly employ any person who is an unauthorized alien in connection with the contracted services. Additionally, Contractor must provide documentation for said business entity evidencing current enrollment in a federal work authorization program.

48.<u>CERTIFICATION OF NONSEGREGATED FACILITIES</u> (applicable to contracts and subcontracts over $10,000)

a) By the submission of this bid, the bidder, offeror, applicant or subcontractor certifies that he/she does not maintain or provide for his/her establishments, and that he/she does not permit employees to perform their services at any location, under his/her control, where segregated facilities are maintained. He/she certifies further that he/she will not maintain or provide for employees any segregated facilities at any of his/her establishments, and he/she will not permit employees to perform their services at any location under his/her control where segregated facilities are

maintained. The bidder, offeror, applicant or subcontractor agrees that a breach of this certification is a violation of the equal opportunity clause of this contract.

b) As used in this certification, the term "segregated facilities" means any waiting rooms, work areas, rest rooms and wash rooms, restaurants and other eating areas, time clocks, locker rooms, and other storage or dressing areas, parking lots, drinking fountains, recreation or entertainment areas, transportation and housing facilities provided for employees which are segregated by explicit directive or are, in fact, segregated on the basis of race, color, religion, or national origin because of habit, local custom, or any other reason.

c) He/she further agrees that (except where he/she has obtained for specific time periods) he/she will obtain identical certification from proposed subcontractors prior to the award of subcontracts exceeding $10,000 which are not exempt from the provisions of the equal opportunity clause; that he/she will retain such certifications in his/her files; and that he/she will forward the following notice to such proposed subcontractors (except here proposed subcontractors have submitted identical certifications for specific time periods).

49. Nonresident/Foreign Contractors. The Contractor shall procure and maintain during the life of this contract:

a) If the Contractor is a foreign corporation, a certificate of authority to transact business in the State of Missouri from the Secretary of State, unless exempt pursuant to the provisions of Section 351.572 RSMo.

b) A certificate from the Missouri Director of Revenue evidencing compliance with the transient employer financial assurance law, unless exempt pursuant to the provisions of Section 285.230 RSMo.

50. General Independent Contractor Clause. This agreement does not create an employee/employer relationship between the parties. It is the parties' intention that the Contractor will be an independent contractor and not the City's employee for all purposes, including, but not limited to, the application of the Fair Labor Standards Act minimum wage and overtime payments, Federal Insurance Contribution Act, the Social Security Act, the Federal Unemployment Tax Act, the provisions of the Internal Revenue Code, Missouri revenue and taxation laws, Missouri workers' compensation and unemployment insurance laws. The Contractor will retain sole and absolute discretion in the judgment of the manner and means of carrying out the Contractor's activities and responsibilities hereunder. The Contractor agrees that it is a separate and independent enterprise from the public employer, that it has a full opportunity to find other business, that it has made its own investment in its business, and that it will utilize a high level of skill necessary to perform the work. This agreement shall not be construed as creating any joint employment relationship between the Contractor and the City, and the City will not be liable for any obligation incurred by the Contractor, including but not limited to unpaid minimum wages and/or overtime premiums.

51. City Benefits. The Contractor shall not be entitled to any of the benefits established for the employees of the City nor be covered by the Worker's Compensation Program of the City.

52. Inspection. The authorized representative and agents of the City of Joplin and the Department of Housing and Urban Development shall be permitted to inspect all work, materials, payrolls, records of personnel, invoices of materials, and other relevant data and records.

53. Reporting Requirements. The Contractor shall complete and submit all reports, in such form and according to such schedule, as may be required by the Owner.

54. Occupational License. The Contractor shall obtain and maintain an occupational license with the City of Joplin, Missouri, if required by city code and any required state or federal license. The cost for this occupational license shall be borne by the Contractor. No contract will be executed by the City until this occupational license has been obtained and that the Contractor is current on any City taxes is verified.

55. Safety Training. Pursuant to Missouri Revised Statute Section 292.675, Contractors and subcontractors who sign a contract to work on public works projects must provide a 10-hour OSHA construction safety program, or similar program approved by the Department of Labor and Industrial Relations, to be completed by their on-site employees within sixty (60) days of beginning work on the construction project. Contractors and subcontractors in violation of this provision will forfeit to the public body $2,500 plus $100 a day for each employee who is employed without training. Public bodies and contractors may withhold/assess these penalties from the payment due to those contractors and subcontractors if found to be in non-compliance.

56. Affidavit for Contracts Over $5,000.00. That pursuant to Missouri Revised Statute Sections 285.525 through 285.550, if this contract exceeds the amount of $5,000.00 and Contractor is associated with a business entity, Contractor shall provide an acceptable notarized affidavit stating that the associated business entity is enrolled in and participates in a federal work authorization program with respect to the employees working in connection with the contracted services, and that said business entity does not knowingly employ any person who is an unauthorized alien in connection with the contracted services. Additionally, Contractor must provide documentation for said business entity evidencing current enrollment in a federal work authorization program.

57. Compliance with Laws. Contractor agrees to comply with all applicable federal, state and local laws or rules and regulations applicable to the provision of services and products hereunder. Contractor affirmatively states that payment of all local, state, and federal taxes and assessments owed by Contractor is current.

a. **PROVISIONS REQUIRED BY LAW DEEMED INSERTED.** Each and every provision of law and clause required by law to be inserted in this contract shall be deemed to be inserted herein and the contract shall be read and enforced as though it were included herein, and if through mistake or otherwise any such provision is not inserted, or is not correctly inserted, then upon the application of either party the contract shall forthwith be physically amended to make such insertion or correction.

58. Entire Agreement. This agreement contains the entire agreement of the parties. No modification, amendment, or waiver of any of the provisions of this agreement shall be effective unless in writing specifically referring hereto, and signed by both parties.

59. Remedies. Except as may be otherwise found in the contract documents, all claims, disputes, counter-claims, and other matters in question between the Owner and Contractor arising out of or related to this agreement or the breech thereof, will be decided by arbitration if the parties hereto mutually agree, or in a court of competent jurisdiction within the state in which the Owner is located.

60. Jurisdiction. This agreement and every question arising hereunder shall be construed or determined according to the laws of the State of Missouri. Should any part of this agreement be adjudicated, venue shall be proper only in the Circuit Court of Jasper County, Missouri.

IN WITNESS WHEREOF, the parties hereto have set their hands and seals on the day and year herein stated.

CONTRACTOR:

CERTIFICATE OF DIRECTOR OF FINANCE

I certify that the expenditure contemplated by this document is within the purpose of the appropriation to which it is to be charged and that there is an unencumbered balance of appropriated and available funds to pay therefor.

By: _____

Printed Name: ___

Title: _____

_____

Leslie Haase, Director of Finance

CITY OF JOPLIN, MISSOURI

APPROVED AS TO FORM

_____

Peter Edwards, City Attorney

By: _____ David Hertzbe

CONTRACTOR'S BOND NO.
FOR CITY CONTRACTS

PERFORMANCE BOND

KNOW ALL PERSONS BY THESE PRESENTS: That

B-3 Contractors

a Corporation, hereinafter called Principal, and

_____
(Name of Surety)

_____
(Address of Surety)

hereinafter called Surety, are held and firmly bound unto

THE CITY OF JOPLIN, MISSOURI
602 S. MAIN STREET, JOPLIN, MO 64801

hereinafter called OWNER, in the total aggregate penal sum of xxxxxxxxxxxxxxxxxxxxxxxxxxxxx AND xx/100 DOLLARS ($xxxxxxxX.00) lawful money of the United States, for the payment of which sum well and truly to be made, we bind ourselves, our heirs, executors, administrators, successors, and assigns, jointly and severally, firmly by these presents.

THE CONDITION OF THIS OBLIGATION is such that whereas, the Principal entered into a certain contract with the OWNER, dated the _____ day of_____, 20____, a copy of which is hereto attached and made a part hereof for the construction of:

NID IV Sidewalk 2019

NOW, THEREFORE, if the Principal shall well, truly and faithfully perform its duties, all the undertakings, covenants, terms, conditions, and agreements of said contract during the original term thereof, or any extensions thereof, which may be granted by the OWNER, with or with-out notice to the SURETY and during the one year guaranty period and if the PRINCIPAL shall satisfy all claims and demands incurred under such contract, and shall fully indemnify and save harmless the OWNER from all costs and damages which it may suffer by reason of failure to do

so, and shall reimburse and repay the OWNER all outlay and expense which the OWNER may incur in making good any default, then this obligation shall be void, otherwise to remain in full force and effect.

PROVIDED, FURTHER, that the said SURETY, for value received hereby stipulates and agrees that no change, extension of time, alteration or addition to the terms of the contract or to WORK to be performed thereunder or the SPECIFICATIONS accompanying same shall in any way affect its obligation on this BOND, and it does hereby waive notice of any such change, extension of time, alteration or addition to the terms of the contract or to the WORK or to the SPECIFICATIONS.

PROVIDED, FURTHER, that it is expressly agreed that the BOND shall be deemed amended automatically and immediately, without formal and separate amendments hereto, upon amendment of the Contract not increasing the contract price more than 20 percent, so as to bind the PRINCIPAL and the SURETY to the full and faithful performance of the CONTRACT as so amended. The term "Amendment", wherever used in this BOND, and whether referring to this BOND, the Contract or the Loan Documents shall include any alteration, addition, extension, or modification of any character whatsoever.

IN WITNESS, whereof, this the_____day of_____, 20____.

ATTEST: (SEAL)

_____ _____

Secretary Principal

Approved as to form this_____day

of_____, 20____. By _____

_____ By _____

City Attorney

ATTEST: (SEAL)

_____ _____

Secretary Surety

Approved this_____day of

_____, 20_____. By _____

_____ By _____
Director of Finance (Title)

NOTE: Date of BOND must not be prior to date of Contract.

If CONTRACTOR is partnership, all partners should execute BOND.

IMPORTANT: Surety companies executing BONDS must appear on the Treasury Department's most current list (Circular 570 as amended) and be authorized to transact business in the state where the Project is located.

CONTRACTOR'S BOND NO.
FOR CITY CONTRACTS

PAYMENT BOND

KNOW ALL MEN BY THESE PRESENTS: That

B-3 Contractors

a Corporation, hereinafter called Principal, and

_____

(Name of Surety)

hereinafter called Surety, are held and firmly bound unto

THE CITY OF JOPLIN, MISSOURI
602 S. MAIN STREET, JOPLIN, MO 64801

hereinafter called OWNER, and unto all persons, firms, and corporations who or which may furnish labor, or who furnish materials to perform as described under the contract and to their successors and assigns in the total aggregate penal sum of xxxxxxxxxxxxxxxxxxxxxxxxxxxxxxxx and xx/100 DOLLARS ($xxxxxxxxxx.00) in lawful money of the United States, for the payment of which sum well and truly to be made, we bind ourselves, our heirs, executors, administrators, successors, and assigns, jointly and severally, firmly by these presents.

THE CONDITION OF THIS OBLIGATION is such that whereas, the principal entered into a certain contract with the OWNER, dated the_____day of_____, 20___, a copy of which is hereto attached and made a part hereof for the construction of:

NID IV Sidewalk 2019

NOW, THEREFORE, if the PRINCIPAL shall promptly make payment to all persons, firms, subcontractors, and corporations furnishing materials for or performing labor in the prosecution of the WORK provided for in such contract, and any authorized extensions or modification thereof, including all amounts due for materials, lubricants, oil, gasoline, coal or coke, repairs on machinery, equipment and tools, consumed or used in connection with the construction of such WORK, all insurance premiums on said work, and for all labor cost incurred in such WORK including the stipulation in said contract requiring the payment of not less than the prevailing hourly rate of wages as found by the Department of Labor and Industrial Relations of the State of Missouri or by final judicial determination of the Courts of the State of Missouri, including that by a SUBCONTRACTOR, and to any mechanic or material man lien holder whether it acquires

its lien by operation of State or Federal law; then this obligation shall be void, otherwise to remain in full force and effect.

PROVIDED, that beneficiaries or claimants hereunder shall be limited to the SUBCONTRACTORS, any persons, firms, and corporations having a direct contract with the PRINCIPAL or its SUBCONTRACTORS.

PROVIDED, FURTHER, that the said SURETY for value received hereby stipulates and agrees that no change, extension of time, alteration or addition to the terms of the contract or to the WORK to be performed thereunder or the SPECIFICATIONS accompanying the same shall in any way affect its obligation on this BOND, and it does hereby waive notice of any such change, extension of time, alteration or addition to the terms of this contract or to the WORK or to the SPECIFICATIONS.

PROVIDED, FURTHER, that no suit or action shall be commended hereunder by any claimant: (a) Unless claimant, other than one having a direct contract with the PRINCIPAL, shall have given written notice to any two of the following: The PRINCIPAL, the OWNER, or the SURETY above named within ninety (90) days after such claimant did or performed the last of the work or labor, or furnished the last of the materials for which said claim is made, stating with substantial accuracy the amount claimed and the name of the party to whom the materials were furnished, or for whom the work or labor was done or performed. Such notice shall be served by mailing the same by registered mail or certified mail, postage prepaid, in an envelope addressed to the PRINCIPAL, OWNER, or SURETY, at any place where an office is regularly maintained for the transaction of business, or served in any manner in which legal process may be served in the state in which the aforesaid project is located, save that such service need to be made by a public officer. (b) After the expiration of one (1) year following the date of which PRINCIPAL ceased work on said CONTRACT, it being understood, however, that if any limitation embodied in the BOND is prohibited by any law controlling the construction thereof, such limitation shall be deemed to be amended so as to be equal to the minimum period of limitation permitted by such law.

PROVIDED, FURTHER, that it is expressly agreed that this BOND shall be deemed amended automatically and immediately, without formal and separate amendments hereto, upon amendment to the Contract not increasing the contract price more than 20 percent, so as to bind the PRINCIPAL and the SURETY to the full and faithful performance of the Contract as so amended. The term "Amendment", wherever used in this BOND and whether referring to this BOND, the contract or the loan documents shall include any alteration, addition, extension or modification of any character whatsoever.

PROVIDED, FURTHER, that no final settlement between the OWNER and the CONTRACTOR shall abridge the right of any beneficiary hereunder, whose claim may be unsatisfied.

IN WITNESS, whereof, this the_____day of_____, 20____.

ATTEST: (SEAL)

_____ _____
Secretary Principal

Approved as to form this_____day
of_____, 20____. By _____

_____ By _____
City Attorney

ATTEST: (SEAL)

_____ _____
Secretary Surety

Approved this_____day of

_____, 20____. By

_____

_____ By _____
Director of Finance (Title)

NOTE: Date of BOND must not be prior to date of Contract.

If CONTRACTOR is partnership, all partners should execute BOND.
IMPORTANT: Surety companies executing BONDS must appear on the Treasury Department's most current list (Circular 570 as amended) and be authorized to transact business in the state where the Project is located.

COUNCIL BILL NO. 2020-601 ORDINANCE NO.

AN ORDINANCE authorizing the City of Joplin to enter into an agreement with Mid America Fire Apparatus Inc., a Missouri Corporation, for the purpose of purchasing one (1) new and unused E-One Typhoon HP75 with rear-mount aerial for the not to exceed price of Nine-Hundred Eight Thousand Five-Hundred Eighty-Eight Dollars and No Cents ($908,588.00); authorizing the Interim City Manager or his designee to execute the same by and on behalf of the City of Joplin; amending the Annual Budget of the City of Joplin for the Fiscal Year 2019-2020 as adopted by Ordinance 2019-166 on October 21, 2019; and, containing an emergency clause.

BE IT ORDAINED BY THE COUNCIL OF THE CITY OF JOPLIN, MISSOURI, as follows:

Section 1. That the agreement by and between the City of Joplin and Mid America Fire Apparatus Inc., for the purpose of purchasing one (1) new and unused E-One Typhoon HP75 with rear-mount aerial for the not to exceed price of Nine-Hundred Eight Thousand Five-Hundred Eighty-Eight Dollars and No Cents ($908,588.00), a true and accurate copy of said agreement being attached hereto and incorporated as Exhibit "A," be and the same is hereby approved.

Section 2. That the fiscal year 2019-2020 budget appropriation as adopted by Ordinance 2019-166 be amended by increasing appropriations by the total amount of Fifty-Eight Thousand Five Hundred Eighty-Eight Dollars and No Cents ($58,588.00).

Section 3. That the Director of Finance is hereby directed to make all necessary entries on the City records to show the increase in appropriations.

Section 4. That the Interim City Manager of the City of Joplin, or his designee is hereby authorized and directed to execute said agreement by and on behalf of the City of Joplin, Missouri.

Section 5. That the City hereby declares that this Ordinance dealing with public safety, is considered an emergency within the meaning of Section 2.12(1) of the Home Rule Charter of the City of Joplin, Missouri, and, as such, this Ordinance shall become effective immediately upon its passage for the purchase of a fire engine for public safety purposes.

PASSED BY THE COUNCIL OF THE CITY OF JOPLIN, MISSOURI, this _____ day of _____, 2020, by a vote of _____.

_____
Gary L. Shaw, Mayor

ATTEST:

_____
Barbara J. Gollhofer, City Clerk

APPROVED AS TO FORM:

_____
Peter C. Edwards, City Attorney

CITY OF JOPLIN
COUNCIL AGENDA ITEM

ITEM
Council Bill 2020-601: authorizing the City of Joplin to enter into an agreement with Jon's Mid America Fire Apparatus Inc., for the purpose of purchasing an E-One Typhoon HP75 Aerial Apparatus, for the not to exceed price of Nine-Hundred Eight and Five-Hundred Eighty-Eight Thousand and 00/100. ($908,588.00)

MEETING DATE
January 21, 2020

ORIGINATING DEPT
Fire

ATTACHMENTS
CB20202-601 Ordinance; Exhibit A: Jon's Mid America Agreement

REVIEWED BY
Dept. Head: James Furgerson; City Attorney: Peter Edwards; Interim City Manager: Dan Pekarek; Finance Director Leslie Haase

SUMMARY
This Council Bill authorizes the City to enter into an agreement with Jon's Mid America Fire Apparatus Inc. for the purpose of purchasing an E-One Typhoon HP75 Aerial Apparatus.

BACKGROUND
This Council bill proposes the purchase of an E-One Typhoon HP75 Aerial Apparatus. This pricing offered to the Joplin Fire Department is based on utilizing the cooperative purchasing agreement through the Houston Galveston Area Council, known commonly as HGAC, to specify and purchase this fire apparatus. We received two proposals $908.588.00 from Jon's Mid America and from MacQueen Fire Apparatus at $954,468.43. After trade-in of a 2001 HME/Central States the overall final price for the E-One will be $883,588.00. Over the last several years and throughout the United States, hundreds of fire apparatus have been purchased utilizing the HGAC program. In Missouri, numerous cities have purchased apparatus for their fire departments under this program.

The HGACBuy Program is over thirty (30) years old and specializes in high ticket, capital intensive products and services that require technical, detailed specifications and extensive professional skills to evaluate bid responses. All products offered through HGACBuy have been awarded by virtue of a public competitive process. The engineering and technical specifications of the rescue truck meet all of the needs of the City of Joplin.

FUNDING SOURCE
The Fiscal Year 2020 budget included replacing this vehicle at $850,000.00 As a result, this ordinance includes a budget amendment in the amount of $58,588.00 to cover the additional cost. The estimated trade-in revenue is included in the Fiscal Year 2020 budget.

RECOMMENDATION
Staff recommends adoption of this Council Bill on an emergency basis.

NEW APPARATUS SALES AGREEMENT

January 10, 2020

City of Joplin
602 South Main Street
Joplin, Missouri, 64801

This apparatus sales agreement is made by and between Jon's Mid America Fire Apparatus Inc. (Company) and the City of Joplin, MO (Buyer).

The Company agrees to sell and the Buyer agrees to purchase one (1) new and unused 2020 model year E-One Typhoon HP75 rear-mount aerial (per attached specification (100715 V91), delivery to the City of Joplin, MO and all specified trips, manuals and warranties in accordance with terms and conditions incorporated and set forth herein.

1.) Delivery – Approximately 395-420 Calendar Days

The Apparatus shall be prepared and available for inspection at Rogersville, MO in an "In Service" condition in approximately 395-420 calendar days from day of contract signing. Subject to supplier variances, acts of God, and based on current backlog status.

2.) Price/Payment

The Buyer agrees to one (1) new and unused 2020 model year E-One Typhoon HP75 rear-mount aerial per the attached 100715-V91 specification at $**908,588.00 each (nine hundred eight thousand five hundred eighty eight dollars and no cents)** each. This price is good until end of business on February 7, 2020. Buyer may choose to exercise the **pre-payment discount of $29,600.00** for a discounted purchase price of $878,988.00.

Additionally, the Company is offering the City of Joplin a **$25,000.00 trade-in allowance** on the existing aerial VIN 44KFT42831WZ19351 as appraised by Jon's Mid America. The Company will take immediate possession of the City of Joplins's existing aerial.

Pre-payment amount, should Buyer decide to make a pre-payment, is due at time of contract signing. Discount price includes a 100% performance bond provided by E-One.

Buyer_____ Seller_____

3.) Contingencies

The Company will have no liability to the Buyer for any delays, failure to make delivery or other default due to strikes, labor unrest, war, riot, federal, state, or local government action, accidents, fire, flood or other disasters or acts of God or breakdown of machinery, lack of or inability to obtain materials, parts, supplies or any other causes of circumstances beyond reasonable control of the Company which prevent or hinder the Company's manufactures and or delivery of the specified apparatus.

4.) Disclaimer of consequential damages

Company expressly disclaims any liability for consequential or incidental damages which may be sustained by either party, including but not limited to those arising for the use, maintenance or repair of the apparatus, whether under theories of breach of express or implied warranty, negligence strict liability or otherwise. This applies to trade in units as well as purchased unit.

5.) Cancellations

This contract is subject to cancellation by the Buyer only upon payment to the Company of reasonable cancellation charges which take into account expenses already incurred and commitments made by the Company and the Company's anticipated profits.

6.) Warranty

The entire apparatus described in this agreement shall be covered by a one year manufacturer's warranty administered by Jon's Mid America Fire Apparatus Inc. All other applicable warranties are described in attached specifications. All warranty requests must be approved and completed by Jon's Mid America (in Rogersville, Missouri) or an authorized facility as designated by the Company.

In witness whereof, the Buyer and the Company have caused this contract to be executed by their duly appointed representatives this _____day of _____, 2020.

Buyer: City of Joplin
602 South Main Street
Joplin, Missouri, 64801

Print: _____

Signature: _____

Title: _____

Company: Mid America Fire Apparatus Inc.
7037 E. US Highway 60
Rogersville, MO 65742

Accepted by: _____ Date _____
Mid America Fire Apparatus Inc.

CITY of JOPLIN MISSOURI E-ONE HP75 HGAC PROPOSAL
Proposed by Jon's Mid America Fire Apparatus

Table of Contents

TESTING COMPLIANCE STANDARD 15
Hose Bed Capacity 15
Overall Height Restriction 15
Overall Length Restriction 15
NFPA Compliance 15
Equipment Capacity 15
INSPECTIONS AND PENALTIES 15
Final Inspection 15
BUMPERS 15
Front Bumper 15
Front Bumper Extension 15
Bumper Gravel Shield 15
License Plate Holder 16
BUMPER TRAYS 16
Bumper Tray - Center 16
Lid, Bumper Hose Tray 16
FRAME ASSEMBLY 16
Frame Assembly 16
Frame Liner 17
Coated Fasteners 17
AXLE OPTIONS 18
Front Axle 18
Shock Absorbers Front 18
Front Axle Oil Seals 18
Rear Axle 18
SUSPENSIONS 19
Rear Suspension 19
WHEEL OPTIONS 19
Front Wheel Trim Package 19
Rear Wheel Trim Package, Single Axle 19
Front Wheels 19

Rear Wheels 19
TIRE OPTIONS 20
Front Tires 20
Rear Tires 20
Tire Pressure Indicators 20
BRAKE SYSTEMS 20
Front Brakes 20
Brake System 21
Park Brake Release 22
Parking Brake Front Axle 22
Electronic Stability Control 22
Rear Brakes 23
AIR SYSTEM OPTIONS 23
Air Dryer 23
Air Inlet 23
Heated Moisture Ejectors 23
Air Lines 23
Air Horns 24
ENGINES & TRANSMISSIONS 24
Transmission Selector 24
Transmission Fluid 24
Vehicle Speed 24
Engine/Transmission Package 24
SECONDARY BRAKING 27
Jacobs Engine Brake 27
Transmission Programming 27
COOLING PACKAGE 27
Engine Cooling Package 27
FUEL SYSTEMS 28
Fuel System 29
Fuel Re-Prime 29
Fuel Shut-Off [Qty: 2] 29
Fuel Line 29
Fuel/Water Separator 29

ALTERNATOR 30
320 Amp Alternator 30
BATTERIES 30
Battery System 30
CHASSIS OPTIONS 31
Engine Fan Clutch 31
Drivelines 31
Front Tow Eyes 31
Rear Tow Eyes 31
Hydraulic Pump System 31
On-Spot Tire Chains 32
DEF Tank 32
CAB MODEL 33
Cab Typhoon Long 33
Cab Exterior 34
Windshield Wipers 35
Cab Mounts and Cab Tilt System 35
Cab Interior 35
Cab Doors 37
Cab Instruments and Controls 38
Electrical System 38
Daytime Running Lights 39
Fast Idle System 39
Cab Crashworthiness Requirement 39
Seat Mounting Strength 40
Seat Belt Anchor Strength 40
ISO Compliance 40
CAB ROOF TYPE 41
Raised Rear Cab Roof (Split) 41
CAB BADGE PACKAGE 41
Logo Package 41
CAB DOOR OPTIONS 41
Rear Cab Door Position 41
Cab Door Locks 41

Cab Door Stainless Steel Trim 41
Cab Door Panels 41
Cab Door Reflective Material 42
Cab Door Locks 42
Cab Front Door Windows 42
Cab Rear Door Windows 42
Cab Door Style 42
CAB STEP OPTIONS 42
Cab Steps 42
MIRRORS 42
Mirror Extension 42
Cab Mirrors 43
MISC EXTERIOR CAB OPTIONS 43
Cab Canopy Window 43
Cab Canopy Window 43
Front Mud Flaps 43
Handrails 43
Handrails 43
Rear Cab Wall Construction 44
Cab Wheel Well 44
Receptacle Mounting Plate 44
Glass Tint 44
HVAC 44
HVAC Control Location 44
Air Conditioning 44
SEATS 45
Seating Capacity Tag 45
Cab Seat Embroidery Set-Up 45
SCBA Bracket SmartDock 45
Cab Seats 46
Seat Cover Material 46
Seat Fabric Color 46
Seat, Rear Facing 46
Seat, Rear Facing 46

Cab Seat Embroidery [Qty: 4] 46
Seat, Officer 47
Seat, Driver 47
MEDICAL CABINETS 47
Medical Cabinet 47
Medical Storage Cabinet Finish 48
Medical Cabinet Doors [Qty: 3] 48
Medical Cabinet 48
Medical Cabinet 48
MISC INTERIOR CAB OPTIONS 49
Cab Interior Color 49
Sun Visors 49
Cab Rollover Protection - Master Control Module 49
Cab Rollover Protection - Slave Module for Master Control 49
Cab Rollover Protection - Seat Belt Pretensioners [Qty: 4] 49
Mounting Plate on Engine Cover 49
Engine Cover 50
MDT Bracket 50
Front Occupant Protection 50
Cab Rollover Protection - Seat Pull-Down 50
Cab Rollover Protection - Side Air Bags [Qty: 4] 51
Overhead Console 51
Rear Engine Cover 51
Cab Dash - Low Profile Severe Duty 51
Cab Insulation Package 52
CAB ELECTRICAL OPTIONS 52
Cab Dome Lights 52
Auto-Eject Battery Charger Receptacle 52
Horn Button Switch 52
English Dominant Gauge Cluster 52
Headlights 53
Battery Charger/Air Compressor 53
12 Volt (or 24 Volt) Outlet 53
Pre-Wire 53

Antenna Base 53
Battery Charger Location 54
Air Compressor Location 54
Cab USB Charging Port 54
DPF Regeneration Override 54
LED Cab Headlights 54
Auto Drain 54
Cab Door Step Area Lighting 54
Cab Turn Signals 54
BODY MODEL 55
Aerial Body 55
BODY COMPT REAR 60
Rear Body Platework 60
AERIAL BODY OPTIONS 60
Triple Crosslay Hosebed 60
Rear Pike Pole Storage 61
Ladder Tunnel Doors 61
Outrigger Covers 61
Auxiliary Ground Pads 61
DOORS 61
Single Compartment Door 61
Painted Roll Up Compartment Door 62
Drip Pan 62
SHELVES 62
Adjustable Shelf [Qty: 9] 62
COMPARTMENT DIVIDERS 63
Partition Vertical Bolt-In 63
TRAYS / TOOLBOARDS 63
Roll-Out Tilt Down Tray 63
Toolboard [Qty: 2] 63
Peg Toolboard(s) 63
Roll-Out Tray 64
COVERS 64
Hose Bed Cover 64

Vinyl Crosslay Cover 65
PUMP MODULE 65
PUMP PANELS 65
Side Mount Pump Panels 65
Pump Access Door 65
MISC PUMP PANEL OPTIONS 65
Pump Panel Tags 65
WATER TANK 65
Booster Tank 65
TANK PLUMBING 67
Tank Fill 2 Akron Valve 67
Tank to Pump, 3" Akron Valve 67
LADDER STORAGE / RACKS 68
Ground Ladder Storage 68
Ladder Tunnel Enclosure 68
Bracket Horizontal Ladder 68
HANDRAILS / STEPS 68
Hand Rail Inserts 68
Slide-Out Platform 69
Handrail 69
Auxiliary Step 69
Flop Down Step 69
MISC BODY OPTIONS 70
Mud Flaps 70
Swirled Finish 70
Anodize Aluminum Trim 70
Body Wheel Well 70
SCBA BOTTLE STORAGE 70
SCBA Wheel Well Bottle Storage 70
SCBA Strap 71
PUMPS 71
Pump Rating 71
Fire Pump System 71
PUMP CERTIFICATION 72

Pump Certification 72
PUMP OPTIONS 73
Waterous Overheat Protection Manager 73
Steamers, Flush+1 73
Pump Seal, Mechanical 73
Manual Master Drain 73
Pump Cooler 74
Priming System 74
INTAKES 74
Left Intake 2.5 Akron Valve 74
Right Intake 2.5 Akron Valve 75
INTAKE OPTIONS 75
Intake Pressure Relief 75
DISCHARGES AND PRECONNECTS 76
Front Jump Line 1.5 Akron Valve 76
Left Front 2.5 Hose Bed Akron Valve 76
Waterway 4 Discharge with 3 Akron Valve 77
Front Bumper Discharge Swivel, Brass In Tray 77
1.5 Single Crosslay Akron Valve [Qty: 2] 77
Single Crosslay 2.5 Akron Valve 78
Discharge Left Panel 2.5 Akron Droop 78
Discharge Right Panel 2.5 Akron Droop 79
Discharge Right Panel 3 Akron Droop 79
DISCHARGE OPTIONS 80
IC Push/Pull Control 80
Bleeder Drain Valve [Qty: 11] 80
Discharge/Intake Bezel 81
PRESSURE GOVERNORS 81
FRC PumpBoss Pressure Governor 81
GAUGES 82
2.5 [Qty: 11] 82
4" Master Pressure Gauges w/Bezel 83
FRC Water Tank Level Gauge 83
ELECTRICAL SYSTEMS 83

Multiplex Electrical System 83
Vehicle Data Recorder 87
Multiplex Display 87
Electrical Connection Protection 88
Smart Truck Technology 88
LIGHT BARS 89
Front Light Bar Color(s) 89
Light Bar Mount 89
Light Bars 90
WARNING LIGHT PACKAGES 90
Lower Level Warning Light Package 90
WARNING LIGHTS 90
Hazard (Door Ajar) Light 90
Opticom Emitter 90
Upper Rear Warning Lights 91
Warning Lights 91
DIRECTIONAL LIGHT BARS 91
Directional Light Bar Control Location 91
Directional Traffic Warning Light 91
SIRENS 91
Electronic Siren 91
Electronic Siren Control Location 92
Mechanical Siren 92
SPEAKERS 92
Siren Speaker 92
DOT LIGHTING 92
License Plate Light 92
Tail Lights 92
LED Marker Lights 93
LIGHTS - COMPARTMENT, STEP & GROUND 93
Compartment Light Package 93
Ground Lights 93
Step Lights 94
Medical Cabinet Light (Blue) [Qty: 3] 94

Ladder Tunnel Light [Qty: 2] 94
LIGHTS - DECK AND SCENE 94
Hose Bed Light 94
Crosslay Light 94
Scene Lights 95
LIGHTS - NON-WARNING 95
Engine Compartment Light 95
Pump Panel Light Package 95
Pump Compartment Light 95
LED Backing Lights 95
CONTROLS / SWITCHES 96
Door Ajar Alarm 96
Foot Switch 96
Foot Switch 96
Additional Switch 96
CAMERAS / INTERCOM 96
Two-Way Intercom 96
Camera Back-Up 97
Intercom System 97
MISC ELECTRICAL 97
Back-Up Alarm 98
12 Volt DC Power Distribution Module 98
GENERATOR 98
Hydraulic Generator 98
GENERATOR TEST 99
3rd Party Generator Testing 99
BREAKER BOXES 99
Circuit Breaker Panel 99
LIGHTS - QUARTZ 99
120V LED Flood Light [Qty: 2] 99
120V LED Flood Light 100
RECEPTACLES 100
Receptacle 100
ELECTRIC CORD REELS 100

Rollers, Cord Reel 100
Electric Cord Reel 101
Rollers, Cord Reel 101
Circle D Mounting Box 101
Electrical Junction Box 101
Cord Reel Rewind Switch 101
AERIAL MODEL 101
HP75 Aerial Ladder 102
Forward Aerial Support 108
AERIAL HYDRAULIC SYSTEM OPTIONS 114
Aerial Hydraulic Oil Level Gauge 114
AERIAL CONTROLS 114
Aerial Control System 114
Aerial Controls at Ladder Tip 116
Pump Panel Aerial Controls 116
Short Jacking System 118
MONITORS 118
Monitor Finish 118
1000 GPM Electric Monitor 118
WATERWAY OPTIONS 119
Pinned Waterway Upgrade 119
Rear Inlet Valve 120
Waterway Inlet 120
Waterway Pressure Gauge 120
AERIAL WARNING LIGHTS 120
LED Outrigger Lights (PR) 120
AERIAL LIGHTING 120
Ladder Base Lighting 120
Ladder Climbing Lights 121
LED 12V Flood Light 121
Quartz Light 121
MISC AERIAL ELECTRICAL 122
Aerial Tip Receptacle 122
AERIAL EQUIPMENT 122

Hand Rail Extensions 122
Stokes Basket Brackets 122
Lifting Eyes 122
AERIAL LADDER BRACKETS 122
Roof Ladder Bracket 122
SIGN PLATES 122
Aerial Sign Plate 122
AERIAL TESTING 123
Third-Party Flow Test 123
Aerial Certification 123
GROUND LADDERS 125
Alco-Lite Roof Ladder [Qty: 3] 125
Alco-Lite Extension Ladder 125
Alco-Lite 3-Section Extension Ladder 125
Little Giant Model 17 Ladder 125
Alco-Lite Folding Ladder with Shoes 125
MISC LOOSE EQUIPMENT 126
Wheel Chocks 126
DOT Required Drive Away Kit 126
David Clark Headset [Qty: 2] 126
David Clark Headset [Qty: 2] 126
EXTERIOR PAINT 127
Paint Break with Dip to Grille 127
Un-Painted Pump/Pre-Connect Module(s) 127
Painted Header Plate 127
Paint Chassis Frame Rails 127
Paint Custom Cab 127
Paint Cab Two-Tone Color 128
Paint Body Large 128
Aerial Paint 129
Painted Reel 129
Grille Painted Flag 129
Air Conditioning Condenser(s) 130
Sanded Extrusions 130

INTERIOR PAINT 130
Cab Interior Paint 130
LETTERING 130
Scotchlite Letter [Qty: 4] 130
Sign Gold Letter [Qty: 36] 130
Sign Gold Letters [Qty: 26] 130
Lettering Shade and/or Outline [Qty: 66] 130
STRIPING 130
Reflective Tape on Stabilizers 130
Reflective Stripe in Rubrail 131
Cab and Body Stripe 131
Cab and Body Stripe [Qty: 2] 131
Scotchlite Cab Stripe 131
Rear Body Scotchlite Striping 131
Designated Standing / Walking Area Indication 131
GRAPHICS 131
Customer Supplied Logo [Qty: 4] 132
SignGold Logo [Qty: 2] 132
WARRANTY / STANDARD & EXTENDED 132
Standard 1 Year Warranty 132
Lifetime Frame Warranty 132
10 Year 100,000 Mile Structural Warranty 132
10 Year Stainless Steel Plumbing Warranty 132
20 Year Aerial Device Structural Warranty 133
10 Year Paint and Corrosion Warranty 133
25 Year Frame Rail Corrosion Warranty 133
Meritor Front Axle Warranty 133
Meritor Rear Axle Warranty 134
SUPPORT, DELIVERY, INSPECTIONS AND MANUALS 134
Training 134
Pump Panel Approval Drawing 134
Approval Drawings 134
Approval Drawings - Dash Panel Layout 134
Electronic Manuals 134

Fire Apparatus Safety Guide 135
DEALER ADDED EQUIPMENT 135
Dealer Provided Factory Inspections 135
Dealer Drive-Away From Factory 136

TESTING COMPLIANCE STANDARD

HOSE BED CAPACITY

The hose bed shall have the capacity to store the following hose from the driver side to the officer side.

OVERALL HEIGHT RESTRICTION

The apparatus shall have no overall height restrictions.

OVERALL LENGTH RESTRICTION

The unit has no overall length restrictions.

NFPA COMPLIANCE

The E-ONE supplied components of the apparatus shall be compliant with NFPA 1901, 2016 edition.

EQUIPMENT CAPACITY

Equipment allowance on the apparatus shall be 2500 lbs. This allowance is in addition to the weight of the hoses and ground ladders listed in the shop order as applicable.

INSPECTIONS AND PENALTIES

FINAL INSPECTION

A final inspection shall be performed at the factory prior to shipment to dealer/customer.

BUMPERS

FRONT BUMPER

The vehicle shall be equipped with a one-piece 10" high bumper made from 10 gauge (0.135" nominal) polished stainless steel for corrosion resistance, strength, and long lasting appearance. It shall be mounted directly to the front frame extensions for maximum strength. The bumper shall incorporate two (2) stiffening ribs.

FRONT BUMPER EXTENSION

The bumper shall be extended approximately 20" from the face of the cab as required.

BUMPER GRAVEL SHIELD

The extended front bumper gravel shield shall be made of 3/16" (.375") aluminum tread plate material.

LICENSE PLATE HOLDER

There shall be a license plate holder mounted on the center of the front bumper.

BUMPER TRAYS

BUMPER TRAY - CENTER

A hose tray constructed of 1/8" aluminum shall be recessed into the front bumper extension. The tray shall be located in the center of the bumper and be approximately 12" deep (11" to the top of the slats). One inch thick aluminum slats shall be included in the bottom of the hose tray to aid in the dissipation of water from the tray.

LID, BUMPER HOSE TRAY

The center bumper tray shall have a diamond plate lid. The lid shall be hinged and include a D-Ring latch, rubber seal and gas shock hold open device.

FRAME ASSEMBLY

FRAME ASSEMBLY

The frame shall consist of two (2) C-channel frame rails with heavy-duty cross-members. Each frame rail shall have the following minimum specifications in order to minimize frame deflection under load and thereby improve vehicle ride and extend the life of the frame:

Dimensions: 10-1/4" x 3-1/2" x 3/8"

Material: 110,000-psi minimum yield strength, high strength, low alloy steel

Section Modulus: 16.61 cu. in.

Resistance to Bending Moment (RBM): 1,827,045 in. lbs.

If larger rails are provided, the maximum height of each frame rail shall not exceed the 10-1/4" dimension by more than 1/2" in order to ensure the lowest possible body height for ease of access as well as the lowest possible vehicle center of gravity for maximum stability.

There shall be a minimum of six (6) cross-members joining the two (2) frame rails in order to make the frame rigid and hold the rails/liners in alignment. The cross-members shall be a combination of a formed steel C-channel design along with heavy duty steel fabricated designs as required for the exact chassis configuration. The cross-members shall be attached to the frame

rails with not less than four (4) bolts at each end arranged in a bolt pattern to adequately distribute the cross-member load into the rail/liner and minimize stress concentrations.

All frame fasteners shall be high-strength Grade 8, flanged-head threaded bolts and nuts for frame strength, durability, and ease of repair. The nuts shall be Stover locknuts to help prevent loosening. The frame fasteners shall be tightened to the proper torque at the time of assembly.

The frame rails shall be hot-dip galvanized and powder coated for improved corrosion resistance. The galvanization shall be a minimum of 4 mils thick and done in accordance with ASTM A123. The powder coat shall be 6.5 mils thick (+/- 1.5 mils) and pass ASTM D3359 testing.

The frame cross-members and frame mounted components (suspensions, axles, air tanks, battery boxes, fuel tank, etc.) shall be painted black.

The apparatus manufacturer shall supply a full lifetime frame warranty including cross-members against defects in materials or workmanship. Warranties that provide a lifetime warranty for only the frame rails, but not the cross-members, are not acceptable. NO EXCEPTIONS.

The custom chassis frame shall have a WHEEL ALIGNMENT in order to achieve maximum vehicle road performance and to promote long tire life. The alignment shall conform to the manufacturer`s internal specifications. All wheel lug nuts and axle U-bolt retainer nuts shall be tightened to the proper torque at the time of alignment. The wheel alignment documentation shall be made available at delivery upon request.

FRAME LINER

A 9-3/8" x 3-1/8" x 3/8" channel frame liner shall be bolted to each frame rail for added strength and rigidity. Frame liners shall be made of 110,000 psi minimum yield, high strength, low alloy steel. The frame rail liners shall be hot-dip galvanized and powder coated for improved corrosion resistance. The galvanization shall be a minimum of 4 mils thick and done in accordance with ASTM A123. The powder coat shall be 6.5 mils thick (+/- 1.5 mils) and pass ASTM D3359 testing.

Each frame rail with liner shall have the following minimum characteristics:

Section Modulus: 28.74 cu. in.

RBM: 3,161,400 in. lbs.

The frame liners shall be inserted inside the open portion of the frame rails and shall run continuously from the rear of the frame to the centerline of the front axle to provide maximum frame strength at all critical load points.

COATED FASTENERS

The custom chassis frame assembly shall be assembled using GEOMET 720 coated fasteners for corrosion resistance.

AXLE OPTIONS

FRONT AXLE

The vehicle shall utilize an Meritor FL-943, 5" drop beam front axle with a rated capacity of 21,500 lbs. It shall have "easy steer" knuckle pin bushings and 68.83" kingpin centers. The axle shall be of I-beam construction and utilize grease-lubricated wheel bearings. The vehicle shall have a nominal cramp angle of 45 degrees, plus two (+ 2) degrees to minus three (- 3) degrees including front suction applications.

The front axle hubs shall be made from ductile iron and shall be designed for use with 10 hole hub-piloted wheels in order to improve wheel centering and extend tire life.

The front springs shall be parabolic tapered, minimum 4" wide x 54" long (flat), minimum three (3) leaf, progressive rate with a capacity of 21,500 lbs. at the ground. The springs shall have Berlin style eyes and rubber bushings on each end with an additional standard wrap at the front eye. Tapered leaf springs provide a 20% ride improvement over standard straight spring systems.

The vehicle shall be equipped with a Sheppard integral model M-110 power steering gear, used in conjunction with a power assist cylinder. The steering assembly shall be rated to statically steer up to a maximum front axle load of 21,500 lbs. Relief stops shall be provided to reduce system pressure upon full wheel cut. The system shall operate mechanically should the hydraulic system fail.

In order to achieve maximum vehicle road performance and to promote long tire life, there shall be a wheel alignment. The alignment shall conform to the manufacturer`s internal specifications. All wheel lug nuts and axle U-bolt retainer nuts shall be tightened to the proper torque at the time of alignment. The wheel alignment documentation shall be made available at delivery.

SHOCK ABSORBERS FRONT

Koni model 90 shock absorbers shall be provided for the front axle. The shocks shall be three way adjustable.

The shocks shall be covered by the manufacturer`s standard warranty.

FRONT AXLE OIL SEALS

The front axle shall have Stemco oil seals with sight glass to check the lubricant level of the axle spindles.

REAR AXLE

The vehicle shall utilize an Meritor RS-30-185 single rear axle with single reduction hypoid gearing and a manufacturer`s rated capacity of 33,000 lbs. The axle shall be equipped with oil-lubricated wheel bearings with Meritor oil seals.

The rear axle hubs shall be made from ductile iron and shall be designed for use with 10 hole hub-piloted wheels to improve wheel centering and extend tire use.

SUSPENSIONS

REAR SUSPENSION

The rear suspension shall be a Reyco model 79KB. The suspension shall include linear-rate slipper type leaf springs that eliminate spring eyes and shackles. The suspension shall also include auxiliary "helper" leaf springs, one (1) fixed torque arm, one (1) adjustable torque arm and cast spring hangers. The suspension shall be rated for 33,000 lbs.

WHEEL OPTIONS

FRONT WHEEL TRIM PACKAGE

The front wheels shall have stainless steel lug nut covers (for use with aluminum wheels) or chrome plated plastic (for use with steel wheels). The front axle shall be covered with American made Real Wheels brand mirror finish, 304L grade, non-corrosive stainless steel universal baby moons. All stainless steel baby moons shall carry a lifetime warranty plus a 2 year re-buffing policy. There shall be two (2) baby moons and twenty (20) lug nut covers.

REAR WHEEL TRIM PACKAGE, SINGLE AXLE

The rear wheels shall have stainless steel lug nut covers (chrome plated steel lug nut covers not acceptable), or American made chrome plated plastic lug nut covers. The rear axle shall be covered with American made Real Wheels brand mirror finish, 304L grade, non-corrosive stainless steel, spring clip band mount high hats, DOT user friendly. All stainless steel high hats shall carry a lifetime warranty plus a 2 year re-buffing policy. There shall be two (2) high hats and twenty (20) lug nut covers.

FRONT WHEELS

The vehicle shall have two (2) Accuride polished (on outer wheel surfaces only) aluminum disc wheels. They shall be forged from one-piece corrosion-resistant aluminum alloy and sized appropriately for the tires.

The wheel shall have a load rating of up to 11,000 lbs. each (up to 11,400 lb rating available with speed limited to 60 MPH)

REAR WHEELS

The vehicle shall have four (4) Accuride polished (on outer wheel surfaces only) aluminum disc wheels. They shall be forged from one-piece corrosion-resistant aluminum alloy and sized appropriately for the tires.

TIRE OPTIONS

FRONT TIRES

The front tires shall be two (2) Michelin 425/65R22.5 tubeless type 20 PR radial tires with XFE highway tread.

The tires with wheels shall have the following weight capacity and speed rating:

Max front rating 22,800 @ 65 mph.

Max front rating with Alco aluminum wheels - 24,400 @ 65 MPH (intermittent fire service rating if GAW is over 22,800)

The wheels and tires shall conform to the Tire and Rim Association requirements.

REAR TIRES

The rear tires shall be Michelin 315/80R 22.5 tubeless type 20 PR radial tires with X Multiway 3D XZE tread.

The tires with wheels shall have the following weight capacity:

33,080 lbs. (dual) @ 75 MPH. (Intermittent fire service max load 38,904 lbs)

The wheels and tires shall conform to the Tire and Rim Association requirements.

TIRE PRESSURE INDICATORS

The apparatus shall be provided with Real Wheels AirGuard LED tire pressure indicating valve stem caps. When the tire is under inflated by 5-10 PSI, the LED indicator on the cap shall flash red. The indicator housings shall be shock resistant and constructed from polished stainless steel. The indicators shall be calibrated by attaching to valve stem of a tire at proper air pressure per load ratings and easily re-calibrated by simply removing and re-installing them during service.

Real Wheel Part number RWC1234 was superseded by RWC1235 as of June 2015

BRAKE SYSTEMS

FRONT BRAKES

The front axle shall be equipped with Meritor DiscPlus EX225H 17 inch disc brakes.

The brakes shall be covered by the manufacturer`s standard warranty which is two years, unlimited mileage and parts only.

BRAKE SYSTEM

The vehicle shall be equipped with air-operated brakes and an anti-lock braking system (ABS). The brake system shall meet or exceed the design and performance requirements of the current Federal Motor Vehicle Safety Standard (FMVSS)-121, and the test requirements of the current NFPA 1901 Standard.

A dual-treadle brake valve shall correctly proportion the braking power between the front and rear systems. The air system shall be provided with a rapid pressure build-up feature, designed to meet current NFPA 1901 requirements, to allow the vehicle to begin its emergency response as quickly as possible.

A pressure-protection valve shall be installed to prevent use of the air horns or other air-operated devices should the air system pressure drop below 85 psi. This feature is designed to prevent inadvertent actuation of the emergency/parking brakes while the vehicle is in motion.

Two (2) air pressure needle gauges, one (1) each for front and rear air pressure, with a warning light and buzzer shall be installed at the driver`s instrument panel.

The braking system shall be provided with a minimum of three (3) air tank reservoirs for a total air system capacity of 5,214 cu. in. One (1) reservoir shall serve as the wet tank and a minimum of one (1) tank shall be supplied for each of the front and rear axles. The total system shall carry a sufficient volume of air to comply with FMVSS-121.

Tank Capacities in Cubic Inches:

Wet	Front	Rear	Total
1,738	1,738	1,738	5,214

Spring-actuated emergency/parking brakes shall be installed on the rear axle.

A Bendix-Westinghouse SR-1 valve, in conjunction with a double check valve system, shall provide automatic emergency brake application when the air brake system pressure falls below 40 psi in order to safely bring the vehicle to a stop in case of an accidental loss of braking system air pressure.

A four-channel Wabco ABS shall be provided to improve vehicle stability and control by reducing wheel lock-up during braking. This braking system shall be fitted to both front and rear axles. All electrical connections shall be environmentally-sealed for protection against water, weather, and vibration.

The system shall constantly monitor wheel behavior during braking. Sensors on each wheel transmit wheel speed data to an electronic processor, which shall detect approaching wheel lock-up and instantly modulate (or pump) the brake pressure up to five (5) times per second to prevent wheel lock-up. Each wheel shall be individually controlled. To improve field performance, the system shall be equipped with a dual-circuit design configured in a diagonal pattern. Should a malfunction occur in one circuit, that circuit shall revert to normal braking action. A warning light at the driver`s instrument panel shall signal a malfunction.

The system shall also be configured to work in conjunction with all auxiliary engine, exhaust, or driveline brakes to prevent wheel lock-up.

To improve maintenance troubleshooting, provisions in the system for an optional diagnostic tester shall be provided. The system shall test itself each time the vehicle is started, and a dash-mounted light shall go out once the vehicle is moving above 4 MPH.

A 3 year/300,000 mile parts and labor Anti-Locking Braking System (ABS) warranty shall be provided as standard by Meritor Automotive.

PARK BRAKE RELEASE

One (1) Bendix-Westinghouse PP-5 parking brake control valve shall be supplied on the lower dash panel within easy reach of the driver.

PARKING BRAKE FRONT AXLE

A front axle parking brake system shall be provided. Utilizing a separate dash mounted activation switch, the system shall apply the front axle service brake. The system shall be interlocked to the main axle rear axle parking brake system control, so as to be operational only when the main system brakes are applied. A dash mounted warning tag shall be provided, stating; "Low air system pressure reduces or eliminates braking force."

ELECTRONIC STABILITY CONTROL

The apparatus shall be equipped with a G4 4S4M Electronic Stability Control (ESC) system that combines the functions of Roll Stability Control (RSC) with the added capability of yaw - or rotational – sensing.

RSC focuses on the vehicle's center of gravity and the lateral acceleration limit or rollover threshold. When critical lateral acceleration thresholds are exceeded, RSC intervenes to regulate the vehicle's deceleration functions. The added feature of ESC is to automatically intervene to reduce the risk of the vehicle rotating while in a curve or taking evasive action, prevents drift out through selective braking, and controlling and reducing vehicle speed when lateral acceleration limits are about to be exceeded.

Intervention by the system occurs in three forms - engine, retarder and brake control. The ESC system uses several sensors to monitor the vehicle. These include a steering wheel angle sensor,

lateral accelerometer, and yaw position sensor. ESC constantly monitors driving conditions and intervenes if critical lateral acceleration is detected or if the vehicle begins to spin due to low friction surfaces. The system provides control of engine and retarder torque as well as automatically controlling individual wheels to counteract both over steer and under steer.

To further improve vehicle drive characteristics, the unit shall be fitted with Automatic Traction Control (ATC). This system shall control drive wheel slip during acceleration from a resting point. An extra solenoid valve shall be added to the ABS system. The system shall control the engine and brakes to improve acceleration slip resistance. The system shall have a dash mounted light that shall come on when ATC is controlling drive wheel slip.

3 year/300,000 miles parts and labor warranties for ESC, RSC, and ATC shall be provided as standard by Meritor Automotive.

REAR BRAKES

The rear axle shall be equipped with ArvinMeritor 16.5" x 8.625" P-Cast S-cam brakes with cast brake shoes. The brakes shall be furnished with Haldex automatic slack adjusters.

A 3 year/unlimited miles parts and 3 year labor rear brake warranty shall be provided as standard by ArvinMeritor Automotive. The warranty shall include bushings, seals, and cams.

AIR SYSTEM OPTIONS

AIR DRYER

The chassis air system shall be equipped with a Bendix-Westinghouse AD-9 air dryer to remove moisture from the air in order to help prevent the air lines from freezing in cold weather and prolong the life of the braking system components.

AIR INLET

A 1/4" brass quick-release air inlet with a male connection shall be provided. The inlet shall allow a shoreline air hose to be connected to the vehicle, discharging air directly into the wet tank of the air brake system. It shall be located driver door jamb.

HEATED MOISTURE EJECTORS

All air reservoirs shall be equipped with a Bendix DV-2 automatic reservoir drain valve which shall automatically eject moisture and contaminants from the reservoirs. The moisture ejectors shall be heated.

AIR LINES

Air brake lines shall be constructed of color coded nylon tubing routed in a manner to protect them from damage. Brass fittings shall be provided.

AIR HORNS

Dual air horns shall be provided, connected to the chassis air system. The horns shall be mounted through the front bumper. The front bumper shall have two (2) holes punched to accommodate the air horns. A pressure protection valve shall be installed to prevent the air brake system from being depleted of air pressure.

ENGINES & TRANSMISSIONS

TRANSMISSION SELECTOR

A push-button transmission shift module, Allison model 29538373, shall be located to the right side of the steering column within easy reach of the driver. The shift position indicator shall be indirectly lit for after dark operation. The shift module shall have a "Do Not Shift" light and a "Service" indicator light. The shift module shall have means to enter a diagnostic mode and display diagnostic data including oil life monitor, filter life monitor, transmission health monitor and fluid level. A transmission temperature gauge with warning light and buzzer shall be installed on the cab instrument panel.

TRANSMISSION FLUID

The transmission fluid shall be TranSynd, Shell Spirax S6ATF A295, or equivalent synthetic.

VEHICLE SPEED

Electronic speed limiting set at 60 MPH as required by NFPA 1901.

ENGINE/TRANSMISSION PACKAGE

Engine

The vehicle shall utilize a Cummins L9 engine as described below:

- 450 maximum horsepower at 2100 rpm
- 1250 lb-ft peak torque at 1400 rpm
- Six (6) cylinder, charge air cooled, 4-cycle diesel
- 543 cu. in. (8.9 liter) displacement - 4.49 in bore x 5.69 in stroke
- 16.6:1 compression ratio
- Viable Geometry Turbocharged
- Engine shall be equipped with Full-Authority Electronics
- Electronic Timing Control fuel system
- Fuel cooler (when equipped with a fire pump)

- Fleetguard FS1022 fuel filter with integral water separator and water-in-fuel sensor approved by Cummins for use on the ISL engine
- Fleetguard LF9009 Venturi Combo combination full-flow/by-pass oil filter approved by Cummins for use on the ISL engine
- Engine lubrication system, including filter, shall have a minimum capacity of 25 quarts
- Delco-Remy 39 MT-HD 12-volt starter
- Cummins 18.7 cubic foot per minute (cfm) air compressor
- Corrosion inhibitor additive for coolant system
- After treatment system consisting of a oxidation catalyst and diesel particulate filter and selective catalyist reduction system
- Ember separator compliant with current NFPA 1901 standard
- The engine shall be compliant with 2017 EPA Emission standards

The engine air intake shall draw air through the front cab grill. The intake opening shall be located on the officer (right) side behind front cab face with a plenum that directs air to the air filter. The air cleaner intake piping shall be made from aluminized steel tubing with flexible rubber hoses. The intake piping clamps shall be heavy-duty, constant-torque, T-bolt style to ensure proper sealing under all temperatures in order to keep dust and other contaminants out of the engine intake air stream and protect the engine.

The air cleaner shall be an 11" diameter K&N for lower restriction and high air flow. The filtration media shall be washable and easily accessed for service. The air filter shall have a 3 year / 300,000 mile warranty.

The engine exhaust piping shall be a minimum of 4" diameter welded stainless steel tubing. The aftertreatment system shall be mounted horizontally under the right-hand frame rail in back of the cab in order to minimize heat transmission to the cab and its occupants. The exhaust shall be directed away from the vehicle on the right side ahead of the rear wheels in order to keep exhaust fumes as far away as possible from the cab and pump operator position.

A 5-year/100,000-miles parts and labor warranty shall be provided as standard by Cummins.

A copy of the Engine Installation Review stating the engine installation meets Cummins recommendations shall be provided as requested. The engine installation shall not require the operation of any type of "power-down" feature to meet engine installation tests.

Transmission

The vehicle shall utilize an Allison EVS3000P, electronic, 5-speed automatic transmission.

A push button shift module shall be located right side of the steering column, within easy reach of the driver. The shift position indicator shall be indirectly lit for after-dark operation. The shift module shall have a "Do Not Shift" light and a "Service" indicator light that are clearly visible to the driver. The shift module shall have means to enter a diagnostic mode and display diagnostic data.

A transmission oil temperature gauge with warning light and buzzer shall be installed on the cab instrument panel to warn the driver of high oil temperatures that may damage the transmission.

The transmission shall have a gross input torque rating of 1250 lb.-ft. and a gross input power rating of 450 HP.

The gear ratios shall be as follows:

1 - 3.49

2 - 1.86

3 - 1.41

4 - 1.00

5 - .75

R - 5.03

The transmission shall have an oil capacity of 23 quarts and shall be equipped with a fluid level sensor (FLS) system, providing direct feedback of transmission oil level information to the driver.

A water-to-oil transmission oil cooler shall be provided to ensure proper cooling of the transmission when the vehicle is stationary (no air flow). Air-to-oil transmission oil coolers, which require constant air flow, are not acceptable.

The transmission shall be provided with two (2) engine-driven PTO openings located at the 4 o`clock and 8 o`clock positions for flexibility in installing pto-driven equipment.

The automatic transmission shall be equipped with a power lock-up device. The transmission lock-up shall prevent down shifting of the transmission when the engine speed is decreased during pump operations, thereby maintaining a constant gear ratio for safe operation of the pump. The transmission lock-up shall be automatically activated when the pump is engaged in gear. The transmission lock-up shall be automatically deactivated when the pump is disengaged for normal road operation.

A 5-year/unlimited miles parts and labor warranty shall be provided as standard by Allison Transmission.

Automatic Shift to Nuetral

The transmission shall be programmed to comply with NFPA 1901 and automatically shift to neutral upon application of the parking brake.

SECONDARY BRAKING

JACOBS ENGINE BRAKE

One (1) Jacobs engine brake shall be installed to assist in slowing and controlling the vehicle as required by NFPA 1901 for vehicles with gross vehicle weight ratings (GVWR) of 36,000 lbs. or greater. An on-off control switch and a high-medium-low selector switch shall be mounted in the cab accessible to the driver.

When activated, the Jacobs engine brake shall cut off the flow of fuel to the cylinders and alter the timing of the exhaust valves. This shall transform the engine into a high-pressure air compressor, driven by the wheels, and the horsepower absorbed by the engine in this mode shall slow the vehicle. The selector switch allows the driver to select the amount of retarding power.

When the on-off switch is in the "on" position, the engine brake shall be automatically applied whenever the accelerator is in the idle position and the automatic transmission is in the lock-up mode. If the accelerator is depressed or if the on-off switch is placed in the "off" position, the engine brake shall immediately release and allow the engine to return to its normal function.

TRANSMISSION PROGRAMMING

The transmission shall include the Allison 2nd gear Pre-Select feature. This option will direct the transmission to down shift to second gear when the throttle is released and the Jacobs engine brake (or Telma retarder wired to activate with release of throttle) is engaged. This feature is designed to increase brake life and aid vehicle braking.

COOLING PACKAGE

ENGINE COOLING PACKAGE

Radiator

The cooling system shall include an aluminum tube-and-fin radiator with a minimum of 1,408 total square inches of frontal area to ensure adequate cooling under all operating conditions. There shall be a drain valve in the bottom tank to allow the radiator to be serviced. A sight glass shall be included for quick fluid level assessment. The radiator shall be installed at the prescribed angle in order to achieve the maximum operational effectiveness. This shall be accomplished according to established work instructions and properly calibrated angle measurement equipment.

Silicone Hoses

All radiator and heater hoses shall be silicone. Pressure compensating band clamps shall be used to eliminate hose pinching on all hoses 3/4" diameter and larger. All radiator hoses shall be

routed, loomed, and secured so as to provide maximum protection from chafing, crushing, or contact with other moving parts.

Coolant

The cooling system shall be filled with a 50/50 mixture of water and antifreeze/coolant conditioner to provide freezing protection to minus 40 (- 40) degrees F for operation in severe winter temperatures.

Coolant Recovery

There shall be a coolant overflow recovery system provided.

Charge Air Cooler System

The system shall include a charge air cooler to ensure adequate cooling of the turbocharged air for proper engine operation and maximum performance.

Charge Air Cooler Hoses

Charge air cooler hoses shall be made from high-temperature, wire-reinforced silicone to withstand the extremely high temperatures and pressures of the turbocharged air. The hoses shall incorporate a flexible hump section to allow motion and misalignment of the engine relative to the charge air cooler. Charge air cooler hose clamps shall be heavy-duty, constant-torque, T-bolt clamps to ensure proper sealing under all temperatures in order to keep dust and other contaminants out of the engine intake air stream and protect the engine.

Fan/Shroud

The fan shall be 30" in diameter with eleven (11) blades for maximum airflow and dynamic balance. It shall be made of nylon for strength and corrosion resistance. The fan shall be installed with grade 8 hardware which has been treated with thread locker for additional security. A fan shroud attached to the radiator shall be provided to prevent recirculation of engine compartment air around the fan in order to maximize the cooling airflow through the radiator. The fan shroud shall be constructed of fiber-reinforced high temperature plastic. The shroud shall be specifically formed with curved surfaces which improves air flow and cooling.

Transmission Cooler

The cooling system shall include a liquid-to-liquid transmission cooler capable of cooling the heat generated from the transmission. When a transmission retarder is selected, the cooler shall have an increased capacity to handle the additional heat load.

FUEL SYSTEMS

FUEL SYSTEM

One (1) 65 gallon fuel tank shall be provided. The tank shall be of an all-welded, aluminized-steel construction with anti-surge baffles and shall conform to all applicable Administration (FHWA) 393.65 and 393.67 standards. The tank shall be mounted below the frame rails at the rear of the chassis for maximum protection. The tank shall be secured with two (2) wrap-around T-bolt type stainless steel straps. Each strap shall be fitted with protective rubber insulation and shall be secured with Grade 8 hardware. This design allows for tank removal from below the chassis.

The fuel tank shall be equipped with a 2" diameter filler neck. The filler neck shall extend to the rear of the vehicle behind the rear tires and away from the heat of the exhaust system as required by NFPA 1901 Standard for Automotive Fire Apparatus. The open end of the filler neck shall be equipped with a twist-off filler cap with a retaining chain.

The tank shall be plumbed with top-draw and top-return fuel lines in order to protect the lines from road debris. Bottom-draw and/or bottom-return fuel lines are not acceptable. A vent shall be provided at the top of the tank. The vent shall be connected to the filler neck to prevent splash-back during fueling operations. A .50" NPT drain plug shall be provided at the bottom of the tank.

The tank shall have a minimum useable capacity of 65 gallons of fuel with a sufficient additional volume to allow for thermal expansion of the fuel without overflowing the vent.

A fuel pump shall be provided and sized by the engine manufacturer as part of the engine.

FUEL RE-PRIME

An auxiliary 12 volt fuel pump shall be included in the fuel system. The electric pump shall permit re-priming of the fuel lines and engine. The pump may be manually operated with a switch located accessible to driver. The electric pump shall also automatically operate in conjunction with the mechanical fuel pump as long as engine oil pressure is present. The system shall be plumbed to allow full flow to by-pass the pump.

FUEL SHUT-OFF [QTY: 2]

A shut-off valve shall be supplied to prevent drain back of fuel into the main supply line during filter changes. The valve(s) shall be located: one (1) each side of fuel/water separator.

FUEL LINE

All fuel lines shall be rubber.

FUEL/WATER SEPARATOR

A Racor fuel/water separator shall be installed in place of the Cummins fuel/water separator with drain. The unit shall utilize a three-step separate process: centrifuge for primary contaminant separation, conical baffles for water coalescing, and a replaceable filter for final particulate removal. The separator shall have a bottom drain for removing contaminants, shall be heated and shall have a rated maximum flow of 3.16 GPM. A sensor with indicator light and audible alarm shall be provided for the Racor fuel/water separator. The indicator light shall be mounted in the cab visible to the driver with the unit located inside the frame rails. The unit will alert the driver of high water content in the separator bowl.

ALTERNATOR

320 AMP ALTERNATOR

There shall be a 320 amp Leece Neville alternator installed as specified. The alternator shall be a Leece Neville 4890JB series brushless type with integral rectifier and adjustable voltage regulator with an output of 272 amps per NFPA 1901 rating (320 amps per SAE J56).

BATTERIES

BATTERY SYSTEM

The manufacturer shall supply four (4) heavy duty Group 31 12-volt maintenance-free batteries. Each battery shall be installed and positioned so as to allow easy replacement of any single battery. Each battery shall be equipped with carrying handles to facilitate ease of removal and replacement. There shall be two (2) steel frame mounted battery boxes, one (1) on the left frame rail and one (1) on the right frame rail. Each battery box shall be secured to the frame rail with Grade 8 hardware. Each battery box shall hold (2) batteries. The batteries shall have a minimum combined rating of 4,000 (4 x 1000) cold cranking amps (CCA) @ 0 degrees Fahrenheit and 820 (4 x 205) minutes of reserve capacity for extended operation. The batteries shall have 3/8-16 threaded stud terminals to ensure tight cable connections. The battery stud terminals shall each be treated with concentrated industrial soft-seal after cable installation to promote corrosion prevention. The positive and negative battery stud terminals and the respective cables shall be clearly marked to ensure quick and mistake-proof identification.

Batteries shall be placed on non-corrosive rubber matting and secured with hold-down brackets to prevent movement, vibration, and road shock. The hold-down bracket J-hooks shall be cut to fit and shall have all sharp edges removed. The batteries shall be placed in plastic trays to provide preliminary containment should there be leakage of hazardous battery fluids. There shall be two (2) plastic trays, each containing (2) batteries. Each battery tray shall be equipped with a rubber vent hose to facilitate drainage. The rubber vent hose shall be routed to drain beneath the battery box. The batteries shall be positioned in well-ventilated areas.

One (1) positive and one (1) negative jumper stud shall be provided.

Batteries shall have a warranty of twelve (12) months that shall commence upon the date of delivery of the apparatus.

CHASSIS OPTIONS

ENGINE FAN CLUTCH

The engine shall be equipped with a thermostatically controlled engine cooling fan. The fan shall be belt driven and utilize a clutch to engage when the engine reaches a specified temperature and / or the water pump is engaged (if equipped).

When disengaged, the fan clutch shall allow for improved performance from optional floor heaters, reduced cab interior noise, increased acceleration and improved fuel economy.

The fan shall be equipped with a fail-safe engagement so that if the clutch fails the fan shall engage to prevent engine overheating.

DRIVELINES

Drivelines shall have a heavy duty metal tube and shall be equipped with Spicer 1710HD universal joints to allow full-transmitted torque to the axle(s). Drive shafts shall be axially straight, concentric with axis and dynamically balanced.

FRONT TOW EYES

Two (2) 3/4" thick heavy duty steel tow eyes shall be securely attached to the chassis frame rails at the front of the apparatus. They shall be mounted down below the bumper / cab.

REAR TOW EYES

Two (2) heavy duty tow eyes made of 3/4" (0.75") thick steel having 2.5" diameter holes shall be bolted directly to the rear of the frame to allow towing (not lifting) of the apparatus. The tow eyes shall be protruding into the rear compartment or out the rear of the body. The tow eyes shall be painted chassis black.

HYDRAULIC PUMP SYSTEM

A fixed-displacement hydraulic pump system shall be provided to operate all outrigger and aerial functions as well as the chassis power steering system. This shared hydraulic system is desired because it heats the hydraulic fluid while driving to provide smoother operation to other systems in cold climate conditions, rather than utilizing a separate pump.

The hydraulic pump system shall allow the aerial system to be activated without having to shut down the water pump or reduce engine RPM`s by a switch located on the cab within easy reach of the driver. A system "engaged" indicator light shall be provided on the activation switch.

Engagement of the aerial circuit shall only be allowed with the transmission in the neutral or pump gear and the parking brake engaged.

The system's hydraulic pump shall be engine mounted and able to supply thirteen (13) gpm of hydraulic fluid at a maximum pressure of 3,000 psi. The hydraulic system shall normally operate between 1,000 and 2,500 psi. It shall have flow controls to protect hydraulic components and it shall incorporate a relief valve set at 2,800 psi to prevent over-pressurization (2950 on HP78 models).

ON-SPOT TIRE CHAINS

The chassis shall be provided with On-Spot automatic tire chain system. The system shall include:

- An air cylinder containing one diaphragm, one return spring, one pushrod and a collapsible dust boot held in place with an Oetiker® style retainer to prevent foreign material from entering the air cylinder. The cylinder will be assembled with a two-piece cylinder clamp. The air cylinder will be cast aluminum and the lid will be threaded to receive a 90-degree DOT approved air fitting. The cylinder and lid must be anodized for corrosion resistance. Each cylinder will have 6 strengthening ribs. The cylinder wall thickness will be a minimum of 6mm.
- An extension rod and ball joint assembly that is fastened to the cylinder pushrod by means of a left hand thread. The ball joint must have a provision for greasings.
- A swing arm that is connected to the ball joint assembly with a nylock lock nut on one side and is fastened to the cylinder bracket at the pivot point. The arm will be supported by 2 greaseable arm bushings. The arm will be one-piece hardened alloy material that is formed in such a fashion that it allows the chainwheel to contact the vehicle tire at 3-1/2 to 4 inches off the ground.
- A chainwheel that is fastened to the arm with one 20mm bolt that is hardened to Metric Grade 8.8 along with a hardened lock nut. The bolt will also come with one chainwheel spacer for wheel height adjustment. The chainwheel will be 7-3/4 inches in diameter and will be constructed of a one-piece cast aluminum center hub that contains two maintenance-free sealed bearings. The circumference of the chainwheel will be rubber coated so that it may ride on the inside of the vehicle tire without causing any damage to the tire. There will be 6 lengths of chains approximately 13 inches long that will be welded to a single steel ring at 60-degree intervals. The steel ring will be bolted to the center hub with 6 Grade 8 cap screws and locknuts. Each length of chain will contain up to10 twisted links that are square-cut to provide for maximum traction in forward and reverse. Each chainwheel will be delivered with a chainwheel helmet to protect the chainwheel bearing and casting.

A switch shall be provided in the cab for activation of the tire chains.

DEF TANK

A diesel exhaust fluid (DEF) tank with a five (5) gallon capacity shall be provided.

The DEF tank shall include a heater fed by hot water directly from the engine block to prevent the DEF from becoming too cool to operate correctly per EPA requirements. The tank shall include a temperature sensor to control the heater control valve that controls the feed of hot water from the engine to the DEF tank heater.

A sender shall be provided in the DEF tank connected to a level gauge on the cab dash.

The tank shall be located left side below rear of cab.

CAB MODEL

CAB TYPHOON LONG

The vehicle shall be distinguished by an all-welded aluminum and fully enclosed tilt cab. The cab shall be designed exclusively for fire/rescue service and shall be pre-engineered to ensure long life. It shall incorporate an integral welded substructure of high-strength aluminum alloy extrusions that creates an occupant compartment that is essentially a protective perimeter. The end result is a distinctive structure that is aesthetically appealing, functionally durable, and characterized by increased personnel safety.

The cab shall be constructed from 3/16" (0.188") 3003 H14 aluminum alloy plate roof, floor, and outer skins welded to a high-strength 6063-T6 aluminum alloy extruded subframe. Wall supports and roof bows are 6061 T6 aluminum alloy. This combination of a high-strength, welded aluminum inner structure surrounded on all sides by load-bearing, welded aluminum outer skins provides a cab that is strong, lightweight, corrosion-resistant, and durable.

The inner structure shall be designed to create an interlocking internal "roll-cage" effect by welding two (2) 3" x 3" x 0.188" wall-thickness 6063-T5 aluminum upright extrusions between the 3" x 3" x 0.375" wall-thickness 6061-T6 roof crossbeam and the 2.25" x 3" x 0.435" wall-thickness 6063-T6 subframe structure in the front. An additional two (2) aluminum upright extrusions within the back-of-cab structure shall be welded between the rear roof perimeter extrusion and the subframe structure in the rear to complete the interlocking framework. The four (4) upright extrusions -- two (2) in the front and two (2) in the rear -- shall be designed to effectively transmit roof loads downward into the subframe structure to help protect the occupant compartment from crushing in a serious accident. All joints shall be electrically seam welded internally using aluminum alloy welding wire.

The subframe structure shall be constructed from high-strength 6061-T6 aluminum extrusions welded together to provide a structural base for the cab. It shall include a side-to-side 3" x 1.5" .375 thick C-channel extrusion across the front, with 3/4" x 2-3/4" (.75" x 2.75") full-width crossmember tubes spaced at critical points between the front and rear of the cab.

The cab floor shall be constructed from 3/16" (0.188") 3003 H14 smooth aluminum plate welded to the subframe structure to give the cab additional strength and to help protect the occupants from penetration by road debris and under-ride collision impacts.

The cab roof shall be constructed from 3/16" (0.188") 3003 H14 aluminum treadplate supported by a grid of fore-aft and side-to-side aluminum extrusions to help protect the occupants from penetration by falling debris and downward-projecting objects. Molded fiberglass or other molded fiber-reinforced plastic roof materials are not acceptable.

The cab roof perimeter shall be constructed from 4" x 6-5/8" (4" x 6.625") 6063-T5 aluminum extrusions with integral drip rails. Cast aluminum corner joints shall be welded to the aluminum roof perimeter extrusions to ensure structural integrity. The roof perimeter shall be continuously welded to the cab roof plate to ensure a leak-free roof structure.

The cab rear skin shall be constructed from 3/16" (0.188") 3003 H14 aluminum plate. Structural extrusions shall be used to reinforce the rear wall.

The left-hand and right-hand cab side skins shall be constructed from 3/16" (0.188") 3003 H14 smooth aluminum plate. The skins shall be welded to structural aluminum extrusions at the top, bottom, and sides for additional reinforcement.

The cab front skins shall be constructed from 3/16" (0.188") 3003 H14 smooth aluminum plate. The upper portion shall form the windshield mask, and the lower portion shall form the cab front. Each front corner shall have a full 9" outer radius for strength and appearance. The left-hand and right-hand sides of the windshield mask shall be welded to the left-hand and right-hand front door frames, and the upper edge of the windshield mask shall be welded to the cab roof perimeter extrusion for reinforcement. The cab front shall be welded to the subframe C-channel extrusion below the line of the headlights to provide protection against frontal impact.

CAB EXTERIOR

The exterior of the cab shall be 94" wide x 139.5" long to allow sufficient room in the occupant compartment for up to ten (10) fire fighters. The cab roof shall be approximately 101" above the ground with the flat roof option. The back-of-cab to front axle length shall be a minimum of 67.5".

Front axle fenderette trim shall be brushed aluminum for appearance and corrosion resistance. Bolt-in front wheel well liners shall be constructed of 3/16" (0.188") composite material to provide a maintenance-free, damage-resistant surface that helps protect the underside of the cab structure and components from stones and road debris.

A large stainless steel cooling air intake grille with an open area of no less than 81% shall be at the front of the cab.

The cab windshield shall be of a two-piece replaceable design for lowered cost of repair. The windshield shall be made from 1/4" (0.25") thick curved, laminated safety glass with a 75% light transmittance automotive tint. A combined minimum viewing area of 2,561-sq. in. shall be provided. Forward visibility to the ground for the average (50th percentile) male sitting in the driver`s seat shall be no more than 11 feet 7 inches from the front of the cab to ensure good visibility in congested areas.

WINDSHIELD WIPERS

Two (2) opposed radial style windshield wipers with two (2) separate electric motors shall be provided for positive operation. The wipers shall be tested beyond the minimum SAE requirement to a total of 3.3 million cycles. The wipers shall be a wet-arm type with a one (1) gallon washer fluid reservoir, an intermittent-wipe function, and an integral wash circuit. Wiper arm length shall be approximately 20", and the blade length approximately 21". Each arm shall have a 90 degree sweep for full coverage of the windshield. The wipers shall be synchronized so as to wipe each windshield simultaneously.

CAB MOUNTS AND CAB TILT SYSTEM

The cab shall be independently mounted from the body and chassis to isolate the cab structure from stresses caused by chassis twisting and body movements. Mounting points shall consist of two (2) forward-pivoting points, one (1) on each side; two (2) intermediate rubber load-bearing cushions located midway along the length of the cab, one on each side; and two (2) combination rubber shock mounts and cab latches located at the rear of the cab, one (1) on each side.

An electric-over-hydraulic cab tilt system shall be provided to provide easy access to the engine. It shall consist of two (2) large-diameter, telescoping, hydraulic lift cylinders, one (1) on each side of the cab, with a frame-mounted electric-over-hydraulic pump for cylinder actuation.

Safety flow fuses (velocity fuses) shall be provided in the hydraulic lift cylinders to prevent the raised cab from suddenly dropping in case of a burst hydraulic hose or other hydraulic failure. The safety flow fuses shall operate when the cab is in any position, not just the fully raised position.

The hydraulic pump shall have a manual override system as a backup in the event of an electrical failure. Lift controls shall be located in a compartment to the rear of the cab on the right side of the apparatus. A parking brake interlock shall be provided as a safety feature to prevent the cab from being tilted unless the parking break is set.

The entire cab shall be tilted through a 42-45 degree arc to allow for easy maintenance of the engine, transmission and engine components. A positive-engagement safety latch shall be provided to lock the cab in the full tilt position to provide additional safety for personnel working under the raised cab.

In the lowered position, the cab shall be locked down by two (2) automatic, spring-loaded cab latches at the rear of the cab. A "cab ajar" indicator light shall be provided on the instrument panel to warn the driver when the cab is not completely locked into the lowered position.

CAB INTERIOR

The interior of the cab shall be of the open design with an ergonomically-designed driver area that provides ready access to all controls as well as a clear view of critical instrumentation.

The engine cover between the driver and the officer shall be a low-rise contoured design to provide sufficient seating and elbow room for the driver and the officer. The engine cover shall blend in smoothly with the interior dash and flooring of the cab. An all-aluminum subframe shall be provided for the engine cover for strength. The overall height of the engine enclosure shall not exceed 23" from the floor at each side and 27" in the center section. The engine cover shall not exceed 41" in width at its widest point.

The rear portion of the forward engine cover shall be provided with a lift-up door to provide easy access for checking and filling engine oil, transmission fluid and power steering fluid without raising the cab (a separate access panel shall be provided for the power steering when equipped with an X12 or X15 engine).

The engine cover insulation shall consist of 1/2" closed cell elastomeric compound foam with aluminum foil faced fiberglass fabric manufactured to specifically fit the engine cover. All edges and seams shall be sealed using aluminum foil faced fiberglass tape. The insulation shall meet or exceed DOT standard FMVSS 302-1 and V-0 (UI subject 94 Test).

All cab floors shall be covered with a black rubber floor mat that provides an aggressive slip-resistant surface in accordance with current NFPA 1901.

The rear engine cover area shall be covered with molded 18 lb/cu. ft. (+/-0.5) flexible integral skinned polyurethane foam at a Durometer of 60 (+/- 5.0) per ASTM F1957-99. The cover shall be approximately .5" thick with a minimum skin thickness of 0.0625 inches. The cover shall be provided to reduce the transmission of noise and heat from the engine. The cover shall be black with a pebble grain finish for slip resistance.

A minimum of 57.25" of floor-to-ceiling height shall be provided in the front seating area of the cab and a minimum of 55.25" floor-to-ceiling height shall be provided in the rear seating area. A minimum of 36" of seated headroom at the "H" point shall be provided over each fenderwell.

The interior side to side dimensions shall be 87" from wall padding to wall padding and 89.5" from door to door.

The floor area in front of the front seat pedestals shall be no less than 24" side to side by up to 25" front to rear for the driver and no less than 24" side to side by up to 27" front to rear for the officer to provide adequate legroom.

Battery jumper studs shall be provided to allow jump-starting of the apparatus without having to tilt the cab.

All exposed interior metal surfaces shall be pretreated using a corrosion prevention system.

The interior of the cab shall be insulated to ensure the sound (dbA) level for the cab interior is within the limits stated in the current edition of NFPA 1901. The insulation shall consist of 2 oz. wadding and 1/4" (0.25") foam padding. The padding board shall be backed with 1/4" (0.25") thick reflective insulation. The backing shall be spun-woven polyester. Interior cab padding shall

consist of a rear cab headliner, a rear wall panel, and side panels between the front and rear cab doors.

The vehicle shall use a seven-position tilt and telescopic steering column to accommodate various size operators. An 18" padded steering wheel with a center horn button shall be provided.

The driver and officer seat risers shall be welded to the main cab floor structure. Depending on the make and model of the seats, a storage compartment with a hinged door shall be provided in the risers.

The lower front cab steps shall be a minimum of 11.5" deep x 24" wide. The lower rear cab steps shall be a minimum 16" deep x 21" wide. The first step at the front and rear cab doors shall be no more than 24.0" above the ground with standard tires in the unloaded condition per NFPA 1901 standards. The front and rear steps shall incorporate full width intermediate steps for easy access to the cab interior. The intermediate step at the front doors shall be approximately 6" deep (minimum). The intermediate step at the rear doors shall be approximately 10.75" deep (minimum). The step surfaces shall be aluminum diamond plate with a multi-directional, aggressive gripping surface incorporated into the aluminum diamond plate in accordance with current NFPA 1901.

A black grip handle shall be provided on the interior of each front door below the door window to ensure proper hand holds while entering and exiting the cab. An additional black grip handle shall be provided on the left and right side windshield post for additional handholds.

CAB DOORS

Four (4) side-opening cab doors shall be provided. Doors shall be constructed of a 3/16" (0.188") aluminum plate outer material with an aluminum extruded inner framework to provide a structure that is as strong as the side skins.

Front cab door openings shall be approximately 36" wide x 72.5" high, and the rear cab door openings shall be approximately 33.75" wide x 72.5" high. The front doors shall open approximately 85 degrees, and the rear doors shall open approximately 80 degrees.

The doors shall be securely fastened to the doorframes with full-length, stainless steel piano hinges, with 3/8" (0.375") diameter pins for proper door alignment, long life, and corrosion resistance. Mounting hardware shall be treated with corrosion-resistant material prior to installation. For effective sealing, an extruded rubber gasket shall be provided around the entire perimeter of all doors.

The front door windows shall provide a minimum viewing area of 518 sq. in. each. The rear door windows shall provide a minimum viewing area of 554 sq. in. each. All windows shall have 75% light transmittance automotive safety tint.

The door handles on the exterior of the cab shall be a pull type with vertical orientation. The handles shall be made with corrosion free material and have a black finish. Each exterior door handle shall have an integral keyed lock.

Recessed paddle-style door latches shall be provided on the interiors of the doors. The latches shall be designed and installed to protect against accidental or inadvertent opening as required by NFPA 1901. The rear cab door handles shall have a vertical orientation making them easily accessible from forward or rearward outboard seating positions. Each cab door shall have a manually operated door lock actuated from the interior of each respective door.

CAB INSTRUMENTS AND CONTROLS

Cab controls shall be located on the cab instrument panel in the dashboard on the driver`s side where they are clearly visible and easily reachable. Chassis operation switches shall be installed in removable panels for ease of service. The following gauges and/or controls shall be provided:

• Speedometer/Odometer
• Tachometer
• Engine hour meter
• Engine oil pressure gauge with warning light and buzzer
• Engine water temperature gauge with warning light and buzzer
• Transmission oil temperature gauge
• Two (2) air pressure gauges with a warning light and buzzer (front air and rear air)
• Fuel gauge with low fuel indicator light
• Voltmeter
• Master battery/ignition switch (rocker with integral guard)
• Engine start switch (rocker)
• Heater and defroster controls with illumination
• Marker light/headlight control switch (rocker)
• Panel light dimmer switch (rocker)
• Self-canceling turn signal control with indicators
• Windshield wiper switch with variable speed and washer controls
• Pump shift control with green "pump in gear" and "o.k. to pump" indicator lights
• Parking brake controls with red indicator light on dash
• Automatic transmission shift console
• Electric horn button at center of steering wheel
• Master warning light switch
• Cab ajar warning indicator
• Air filter restriction indicator

Controls and switches shall be identified as to their function by backlit wording adjacent to each switch, or indirect panel lighting adjacent to the controls.

ELECTRICAL SYSTEM

The cab and chassis system shall have designated electrical distribution areas. All electrical components shall be located such that standard operations shall not interfere with or disrupt vehicle operation. An access cover shall be provided for maintenance access to the electrical distribution area. Circuit protection shall be provided by fuses, thermal reset breakers and / or solid state controls.

A 6 place, constantly hot, and 6 place ignition switched fuse panel and ground for customer-installed radios and chargers shall be provided at the electrical distribution area. Radio suppression shall be sufficient to allow radio equipment operation without interference.

All wiring shall be mounted in the chassis frame and protected from impact, abrasion, water, ice, and heat sources. The wiring shall be color-coded and functionally-labeled every 3" on the outer surface of the insulation for ease of identification and maintenance. The wiring harness shall conform to SAE 1127 with GXL temperature properties. Any wiring connections exposed to the outside environment shall be weather-resistant. All harnesses shall be covered in a loom that is rated at 280 degrees F to protect the wiring against heat and abrasion.

DAYTIME RUNNING LIGHTS

Two (2) dual rectangular chrome plated headlight bezels shall be installed on the front of the cab. The low beam headlights shall activate with the release of the parking brake to provide daytime running lights (DRL) for additional vehicle conspicuity and safety. The headlight switch shall automatically override the DRL for normal low beam/high beam operation.

FAST IDLE SYSTEM

A fast idle system shall be provided and controlled by a switch accessible by the driver. The system shall increase engine idle speed to a preset RPM for increased alternator output.

CAB CRASHWORTHINESS REQUIREMENT

The apparatus cab shall meet and/or exceed relevant NFPA 1901 load and impact tests required for compliance certification with the following:

Side Impact Dynamic Pre-Load per SAE J2422 (Section 5).

Testing shall meet and/or exceed defined test using 13,000 ft-lbs of force as a requirement. The cab shall be subject to a side impact representing the force seen in a roll-over. The cab shall exhibit minimal to no intrusion into the cab's occupant survival space, doors shall remain closed and cab shall remain attached to frame.

Cab testing shall be completed using 13,776 ft-lbs of force **exceeding** testing requirements.

Quasi-static Roof Strength (proof loads) per SAE J2422 (Section 6) / ECE R29, Annex 3, paragraph 5.

Testing shall meet and/or exceed defined test using 22,046 lbs of mass as a requirement. Testing shall be completed using platen(s) distributed uniformly over all bearing members of the cab roof structure.

Cab testing shall be completed using 23,561 lbs of mass **exceeding** testing requirements. The cab shall exhibit minimal to no intrusion into the cab's occupant survival space and doors shall remain closed.

Additional cab testing shall be conducted using 117,336 lbs of mass **exceeding** testing requirements by **over five (5) times**. The cab shall exhibit minimal to no intrusion into the cab's occupant survival space and the doors shall remain closed.

Frontal Impact per SAE J2420.

Testing shall meet and/or exceed defined test using 32,549 ft-lbs of force as a requirement. The cab shall be subject to a frontal impact as defined by the standard. The cab shall exhibit minimal to no intrusion into the cab's occupant survival space, doors shall remain closed and cab shall remain attached to frame.

Cab testing shall be completed using 34,844 ft-lbs of force **exceeding** testing requirements.

Additional cab testing shall be conducted using 65,891 ft-lbs of force **exceeding** testing requirements by **over two (2) times**.

The cab shall meet all requirements to the above cab crash worthiness; **NO EXCEPTIONS**.

A copy of a certificate or letter verifying compliance to the above performance by an independent, licensed, professional engineer shall be provided upon request.

For any or all of the above tests, the cab manufacturer shall provide either photographs or video footage of the procedure upon request.

SEAT MOUNTING STRENGTH

The cab seat mounting surfaces shall be third party tested and in compliance with FMVSS 571.207.

SEAT BELT ANCHOR STRENGTH

The cab seat belt mounting points shall be third party tested and in compliance with FMVSS 571.210.

ISO COMPLIANCE

The manufacturer shall ensure that the construction of the apparatus cab shall be in conformance with the established ISO-compliant quality system. All written quality procedures and other

procedures referenced within the pages of the manufacturer`s Quality Manual, as well as all Work Instructions, Workmanship Standards, and Calibration Administration that directly or indirectly impacts this process shall be strictly adhered to. By virtue of its ISO compliance the manufacturer shall provide an apparatus cab that is built to exacting standards, meets the customer`s expectations, and satisfies the customer`s requirements.

CAB ROOF TYPE

RAISED REAR CAB ROOF (SPLIT)

The outboard roof of the rear crew area shall be raised 12" allowing the rear cab doors to be extended up providing improved egress. The forward end of the raised roof shall be tapered for a streamlined appearance. The interior of the raised cab roof areas shall be provided with padded headliner material to match the center cab ceiling.

CAB BADGE PACKAGE

LOGO PACKAGE

The apparatus shall have manufacturer logos provided on the cab and body as applicable.

CAB DOOR OPTIONS

REAR CAB DOOR POSITION

The cab rear doors shall be moved to the rear of the wheel opening. This door placement facilitates easier entry and egress by reducing the rear facing seat protrusion into the door opening.

Rear door position to the 58” or (medium cab).

CAB DOOR LOCKS

The cab shall have 1250 keyed door locks provided on exterior doors to secure the apparatus.

CAB DOOR STAINLESS STEEL TRIM

Each cab door shall have a stainless steel trim on the trailing edge of the door opening. Front cab doors shall be 50" tall on rear vertical edge above floor level. Rear doors shall have full vertical height trim, if applicable.

CAB DOOR PANELS

The inner door panels shall be made from 1/8" (.125") aluminum plate painted Zolatone (to match cab interior paint) for increased durability. The cab door panels shall be split just below

the the handrail and incorporate an easily removable panel for access to the latching mechanism and window regulator for maintenance or service.

CAB DOOR REFLECTIVE MATERIAL

Reflective Red/Lemon Yellow material striping shall be provided approximately 12" high on the lower cab door panels. The stripes shall run from the top outer corner to the bottom inside corner of the lower door area, forming a "A" shape when viewed from the rear. The reflective material shall meet NFPA 1901 requirements.

CAB DOOR LOCKS

Each cab door shall have a manually operated door lock actuated from the interior of each respective door. Exterior of each cab door shall be provided with a keyed lock integrated with the cab door handle.

CAB FRONT DOOR WINDOWS

Full roll-down windows shall be provided for the front cab doors with power operated heavy duty regulators. The regulators shall have worm gear drive cable operation for positive movement and long life. Scissors or gear-and-sector drives are not acceptable. Window switches shall be located at the center dash for access by the driver or officer.

CAB REAR DOOR WINDOWS

Full roll-down windows shall be provided for the rear crew doors with power operated heavy duty regulators. The regulators shall have worm gear drive cable operation for positive movement and long life. Scissors or gear-and-sector drives are not acceptable. Window switches shall be located on each door with additional switches accesible by driver.

CAB DOOR STYLE

The cab doors shall extend down to cover lower step well.

CAB STEP OPTIONS

CAB STEPS

The lower cab steps shall extend 3.5" past the side of the cab to provide increased surface area.

MIRRORS

MIRROR EXTENSION

There shall be a 2" extension provided for each Ramco mirror.

CAB MIRRORS

Two (2) Ramco model 6001MCR remote controlled polished aluminum mirrors shall be installed. The mirrors shall incorporate a top main section with a manually adjustable convex lower mirror. The adjustment of main sections shall be through dash switches. Location: mounted on front corners of cab.

MISC EXTERIOR CAB OPTIONS

CAB CANOPY WINDOW

There shall be a fixed window provided between the front and rear doors on the driver`s side of the cab.

Window dimensions shall be as follows:

- 44" C/A cab (short cab): 16"W x 24.5"H
- 58" - 80" C/A cab (medium - extended): 26.69"W x 24.5"H

CAB CANOPY WINDOW

There shall be a fixed window provided between the front and rear doors on the officer`s side of the cab.

Window dimensions shall be as follows:

- 44" C/A cab (short cab): 16"W x 24.5"H
- 58" - 80" C/A cab (medium - extended): 26.69"W x 24.5"H

FRONT MUD FLAPS

Black linear low density polyethylene (proprietary blend) mud flaps shall be installed on the rear of the cab front wheel wells. The design of the mud flaps shall have corrugated ridges to distribute water evenly.

HANDRAILS

Cab door assist handrails shall consist of two (2) 1.25" diameter x 18" long 6063-T5 anodized aluminum tubes mounted directly behind the driver and officer door openings one each side of the cab. The handrails shall be machine extruded with integral ribbed surfaces to assure a good grip for personnel safety. Handrails shall be installed between chrome end stanchions and shall be positioned at least 2" from the mounting surface to allow a positive grip with a gloved hand.

HANDRAILS

Cab door assist handrails shall consist of two (2) 1.25" diameter x 36" long 6063-T5 anodized aluminum tubes mounted directly behind the driver and officer rear door openings one each side of the cab. The handrails shall be machine extruded with integral ribbed surfaces to assure a good grip for personnel safety. Handrails shall be installed between chrome end stanchions and shall be positioned at least 2" from the mounting surface to allow a positive grip with a gloved hand.

REAR CAB WALL CONSTRUCTION

The rear cab wall shall be constructed using formed 3/16" (.188") aluminum smooth plate interlocking in aluminum extrusions. A rear cab wall overlay constructed of 3/32" (.090") diamond plate shall be provided over the smooth plate.

CAB WHEEL WELL

The cab wheel well shall be increased in size to provide additional clearance for larger tires. The fender trim shall be adjustable in and out to better accommodate various wheel / tire offsets.

RECEPTACLE MOUNTING PLATE

A mounting plate shall be provided for the battery charger receptacle, battery charger indicator and if applicable the air inlet, etc. The plate shall be constructed of 14 gauge brushed finish stainless steel and be removable for service access to the receptacle(s) and indicator.

GLASS TINT

The rear of the cab shall be equipped with dark tint glass. The glass shall have 20% light transmittance (+/- 10%). The dark tint shall be provided for the following windows (as equipped):

- Window on cab sides between front and rear door
- Rear door glass
- Rear cab wall glass
- Vista roof glass

HVAC

HVAC CONTROL LOCATION

Heating and air conditioning controls shall be located in the center dash area.

AIR CONDITIONING

An overhead air-conditioner / heater system with a roof mounted condenser shall be supplied.

The unit shall be mounted to the cab interior headliner in a mid-cab position, away from all seating positions. The unit shall provide fourteen (14) comfort discharge louvers, eight (8) to the back area of the cab, six (6) to the front area of the cab including one (1) each side outboard in the forward overhead console. These louvers will be used for both AC and heated air delivery. Two (2) additional large front louvers shall be damper controlled to provide defogging and defrosting capabilities to the front windshield as necessary.

The unit shall consist of a high output evaporator coil and heater core with one (1) high output dual blower for front air delivery, and two (2) high performance single wheel blowers for rear air delivery. For improved corrosion resistance the evaporator shall have a hydrophilic blue fin coating.

The control panel shall actuate the air-distribution system using electric actuators. The control panel shall allow blended airflow to both the comfort air vents and defrost vents. Separate three-speed blower switches shall be provided to independently control air speed for the front and rear blowers.

The condenser shall be roof mounted and have a minimum capacity of 65,000 BTU`s and have dual fans with a built in receiver drier.

Performance Data: (Unit only, no ducting or louvers)

- AC BTU: 55,000
- Heat BTU: 65,000
- CFM : 1300 @ 13.8V (All blowers)

The compressor shall be a ten-cylinder swash plate type Seltec model TM-31HD with a capacity of 19.1 cu.in. per revolution.

The system shall be capable of cooling the interior of the cab from 100 degrees ambient to 75 degrees or less with 50% relative humidity in 30 minutes or less.

SEATS

SEATING CAPACITY TAG

A tag that is in view of the driver stating seating capacity of four (4) personnel shall be provided.

CAB SEAT EMBROIDERY SET-UP

A one time set-up fee shall be charged for transposing artwork into an embroidery template to be transferred onto the cab seats. The dealer/customer is required to supply artwork at the time of ordering apparatus.

SCBA BRACKET SMARTDOCK

A IMMI SmartDock Gen2 SCBA storage bracket shall be provided. The SmartDock is a strap-free docking station that offers single-motion SCBA insertion and hands-free release when the firefighter stands up to exit the seat. SmartDock has undergone extensive testing to ensure that it meets or exceeds industry standards. When evaluated to the NFPA 1901 Standard for Automotive Fire Apparatus, SmartDock met requirements for retaining both the cylinder and the pack in dynamic testing.

Location: officer's seat, rear facing driver's side, rear facing officer's side.

CAB SEATS

All cab seats shall be Valor brand.

SEAT COVER MATERIAL

All seats shall have Valor Tech XD military grade upholstery material.

SEAT FABRIC COLOR

The color of all seats shall be black with red top stitching.

SEAT, REAR FACING

Rear facing USSC Valor ABTS seat with SCBA driver`s side.

Features shall include:

- Dual retractor belt configuration with ReadyReach
- 95-Degree back angle
- Fixed headrest
- Magnetic SCBA harness securement

SEAT, REAR FACING

Rear facing USSC Valor ABTS seat with SCBA officer`s side.

Features shall include:

- Dual retractor belt configuration with ReadyReach
- 95-Degree back angle
- Fixed headrest
- Magnetic SCBA harness securement

CAB SEAT EMBROIDERY [QTY: 4]

A custom embroidered logo shall be supplied on the back rest of each seat in the cab per the dealer/customer supplied artwork.

SEAT, OFFICER

A USSC Valor ABTS fixed SCBA seat shall be supplied for the officer`s position in front of the cab.

Features shall include:

- Dual retractor belt configuration with ReadyReach
- 95-Degree back angle
- Fixed headrest
- Magnetic SCBA harness securement

SEAT, DRIVER

A USSC Valor P1A air suspension ABTS seat model P1A shall be supplied for the driver`s position.

Features shall include:

- Dymetrol® Active suspension
- Low-profile air suspension
- 2.75 Suspension stroke
- Fore and aft adjustable tracks with 6-inches of travel
- 350 lb. capacity
- Rotational knob for infinitely adjustable lumbar
- Adjustable seat backrest
- Integral headrest
- Dual retractor belt configuration with ReadyReach

MEDICAL CABINETS

MEDICAL CABINET

There shall be a medical storage cabinet provided at the back wall of the interior of the cab, between outboard seats. The medical cabinet shall be constructed of 1/8" smooth aluminum. The medical cabinet shall be approximately 48" high x 32" wide x 24" deep interior.

Three (3) vertically adjustable shelves shall be provided and installed in the medical cabinet. The shelves shall be constructed of 1/8" smooth aluminum plate. Each shelf shall have a 1" front for added strength and reinforcement. The shelves shall be sized to the interior dimensions of the medical cabinet. The shelves shall be mounted with extruded aluminum adjustable shelf tracking attached to the cabinet walls and the shelves to be secured with aluminum brackets to the tracks

to allow for vertical height adjustment. As necessary a 3/4" x 2-3/4" aluminum extrusion shall be mounted to the underside of the shelves to provide additional reinforcement as needed.

There shall be a locking roll up door provided to secure contents.

MEDICAL STORAGE CABINET FINISH

The medical storage cabinet(s) shall have a Zolatone gray finish. The finish shall be applied to the interior, exterior, shelves (if equipped) and trays (if equipped) of the cabinet.

MEDICAL CABINET DOORS [QTY: 3]

All medical cabinets on the custom cab shall be ROM brand roll-up type doors.

MEDICAL CABINET

There shall be one (1) medical storage cabinet provided at the driver`s side rear wall of the cab. The medical cabinet shall be constructed of 1/8" smooth aluminum plate. The medical cabinet shall be approximately 55" high (54" as required) x 20" wide x 22" deep interior.

Three (3) vertically adjustable shelves shall be provided and installed in the medical cabinet. The shelves shall be constructed of 1/8" smooth aluminum plate. Each shelf shall have a 1" front for added strength and reinforcement. The shelves shall be sized to the interior dimensions of the medical cabinet. The shelves shall be mounted with extruded aluminum adjustable shelf tracking attached to the cabinet walls and the shelves to be secured with aluminum brackets to the tracks to allow for vertical height adjustment. As necessary a 3/4" x 2-3/4" aluminum extrusion shall be mounted to the underside of the shelves to provide additional reinforcement as needed.

There shall be a locking roll up door provided to secure contents.

MEDICAL CABINET

There shall be one (1) medical storage cabinet provided at the officer`s side rear wall of the cab. The medical cabinet shall be constructed of 1/8" smooth aluminum plate. The medical cabinet shall be approximately 55" high (54" non-vista) x 20" wide x 22" deep interior.

Three (3) vertically adjustable shelves shall be provided and installed in the medical cabinet. The shelves shall be constructed of 1/8" smooth aluminum plate. Each shelf shall have a 1" front for added strength and reinforcement. The shelves shall be sized to the interior dimensions of the medical cabinet. The shelves shall be mounted with extruded aluminum adjustable shelf tracking attached to the cabinet walls and the shelves to be secured with aluminum brackets to the tracks to allow for vertical height adjustment. As necessary a 3/4" x 2-3/4" aluminum extrusion shall be mounted to the underside of the shelves to provide additional reinforcement as needed.

There shall be a locking roll up door provided to secure contents.

MISC INTERIOR CAB OPTIONS

CAB INTERIOR COLOR

Cab instrument panel, overhead console, trim panels, headliner, and door panels shall be gray.

SUN VISORS

Padded sun visors shall be provided for the driver and officer matching the interior trim of the cab and shall be flush mounted into the underside of the overhead console.

CAB ROLLOVER PROTECTION - MASTER CONTROL MODULE

A RollTek rollover occupant protection system shall be installed in the apparatus cab. The system shall include an Integrated Roll Sensor (master module), Integrated Head Curtains and Integrated Seat Belt pretensioners.

The Integrated Roll Sensor (IRS) shall be a microprocessor-controlled solid-state sensing device that utilizes vehicle-specific calibrations to detect rollovers. The IRS shall be equipped with eight (8) pyrotechnic loops for connection to the protective countermeasures (Integrated Head Curtains and Integrated Seat Belt pretensioners).

The IRS shall continually monitor the truck`s acceleration and angle, and upon detection of an imminent roll-over, shall activate protective countermeasures in a pre-programmed sequence. The entire process from activation to deployment shall take less than ¼ of a second (.234).

In addition to acting as the "brain" of the RollTek system, the IRS shall also act as a "black box," recording crash events for post-crash evaluation.

CAB ROLLOVER PROTECTION - SLAVE MODULE FOR MASTER CONTROL

A slave module shall be installed with the RollTek Integrated Roll Sensor (IRS) to expand the system's capabilities. The slave module shall include connections for up to eight (8) additional pyrotechnic loops for use with up to a total of sixteen (16) protective countermeasures (Integrated Head Curtains and Integrated Seat Belt pretensioners).

CAB ROLLOVER PROTECTION - SEAT BELT PRETENSIONERS [QTY: 4]

RollTek Integrated Seat Belt Pretensioners (ISB) shall be installed in the apparatus cab. The special seat belt buckles shall be designed to receive a signal from the Integrated Roll Sensor during a roll for the pretensioners on the buckles to tighten the seat belts to the occupant, better positioning the occupant in the seats.

MOUNTING PLATE ON ENGINE COVER

An equipment mounting plate shall be provided between the driver and officer on the chassis engine cover. The plate shall be mounted to the engine access door spaced approximately 1/2" up to provide clearance for equipment mounting hardware. The plate shall be constructed of 3/16" aluminum plate and have a swirl finish.

ENGINE COVER

The engine cover shall blend in smoothly with the interior dash and flooring of the cab. The upper left and right sides shall have a sloped transition surface running front to rear providing increased space for the driver and officer.

The engine cover and engine service access door cover shall be molded 18 lb/cu. ft. (+/-0.5) flexible integral skinned polyurethane foam at a Durometer of 60 (+/- 5.0) per ASTM F1957-99. The cover shall be approximately .5" thick with a minimum skin thickness of 0.0625 inches. The cover shall be provided to reduce the transmission of noise and heat from the engine. The cover shall be black and feature a pebble grain finish for slip resistance.

MDT BRACKET

One (1) Havis model C-MD-107 slide-out mount with a model C-HDM-135 mounting base shall be provided on the officer side cab dash. A Havis model UT-1001 universal laptop computer mount shall be provided on the slide-out.

FRONT OCCUPANT PROTECTION

A 4Front occupant protection system shall be installed in the apparatus cab. The system shall inflate three (3) air bags in the following locations:

- Steering wheel air bag to protect the head and neck of the driver
- Knee bolster air bag to protect the driver's legs
- Knee bolster air bag to protect the officer's legs

The air bags shall use a combination of high-pressure stored argon and oxygen (and a pyrotechnic charge for initiation) to inflate the bags to a relatively cool (120° Fahrenheit) inflation temperature and remain inflated for several seconds.

The system shall be connected to the crash detection sensor that will also activate the driver and first officer Integrated Belt Pretensioners if it detects a frontal crash.

CAB ROLLOVER PROTECTION - SEAT PULL-DOWN

A seat pull-down (S4) shall be installed on the air suspension seat(s) in the apparatus cab. The pull-down shall be designed to receive a signal from the Integrated Roll Sensor during a roll (or frontal impact if equipped with 4Front) lowering the air ride seat(s) to provide maximum survivable space for the occupant.

CAB ROLLOVER PROTECTION - SIDE AIR BAGS [QTY: 4]

Side Rollover Airbags (SRA) shall be installed in the apparatus cab. The pillow-shaped side air bags shall be attached either to the ABTS seats. The air bags shall be optimally placed to deploy across the window and side of the vehicle interior to protect the occupants heads during impact. The air bags shall use a combination of high-pressure stored argon and oxygen (and a pyrotechnic charge for initiation) to inflate the bags to a relatively cool (120° Fahrenheit) inflation temperature and remain inflated for several seconds.

OVERHEAD CONSOLE

An overhead console shall be provided in the front of the cab for the driver and officer. The areas in front of the driver and officer shall be removable panels that can be used for switches and other electrical items. The entire overhead console shall be hinged for service access.

The center of the overhead console shall have a lowered area for mounting of up to three (3) electrical components like siren heads, directional bar controllers, etc.

The overhead console shall be constructed of aluminum smooth plate painted to match the cab interior. The console shall be installed using stainless steel fasteners.

REAR ENGINE COVER

The rear engine cover shall be provided with a reduced profile for increased legroom on the forward facing rear inboard seats.

CAB DASH - LOW PROFILE SEVERE DUTY

The driver side and center dash shall be constructed from cast aluminum for durability and long life.

The driver side cast aluminum dash shall enclose the instrument cluster.

The center dash area shall be a low profile design to provide optimal forward visibility. The driver and officer sides shall be angled for ergonomic access and designed for either a color display or switches. Access panels shall be provided on the top, front and officer side for easy service access.

The officer side dash shall be low profile and constructed from .125" smooth aluminum plate. A service access panel shall be provided in the top surface.

The driver, center and officer side dash shall be painted to match the cab interior.

The lower kick panels below the dash to be constructed from .125 aluminum plate painted to match the cab interior. The panels shall be removable to allow for servicing components that may be located behind the panels.

CAB INSULATION PACKAGE

The cab shall be insulated to mitigate noise and ensure maximum cooling/heating capacity. The insulation package shall include 1" Polyester foam with Mylar facing for the front wall, rear wall, side walls, and ceiling, Reflectex (or equal) inside each cab door and 1" closed cell foam insulation below the front and rear facing seat risers.

CAB ELECTRICAL OPTIONS

CAB DOME LIGHTS

A Weldon LED dome light assembly with one (1) white lens and one (1) red lens and plastic housing shall be installed. The white light activates with appropriate cab door and light assembly switch, the red light activates with light assembly mounted switch only.

There shall be two (2) mounted in the front of the cab, one (1) in the driver and one (1) in the officer ceiling.

There shall be two (2) mounted in the rear of the cab, one (1) in the driver side and one (1) in the officer side ceiling.

AUTO-EJECT BATTERY CHARGER RECEPTACLE

The battery charger receptacle shall be a Kussmaul 20 amp NEMA 5-20 Super Auto-Eject #091-55-20-120 with a cover. The Super Auto-Eject receptacle shall be completely sealed and have an automatic power line disconnect.

The receptacle shall be located outside driver's door next to handrail and the cover color shall be Yellow.

HORN BUTTON SWITCH

A two (2) position rocker switch shall be installed in the cab accessible to the driver and properly labeled to enable operator to activate the OEM traffic horn or air horn from the steering wheel horn button.

ENGLISH DOMINANT GAUGE CLUSTER

The cab operational instruments shall be located in the dashboard on the driver side of the cab and shall be clearly visible. The gauges in this panel shall be English dominant and shall be the following:

- Speedometer/Odometer
- Tachometer with integral hour meter
- Engine oil pressure gauge with warning light and buzzer

- Engine water temperature gauge with warning light and buzzer
- Two (2) air pressure gauges with a warning light and buzzer (front air and rear air)
- Fuel gauge
- Voltmeter
- Transmission oil temperature gauge

This panel shall be backlit for increased visibility during day and night time operations.

HEADLIGHTS

The front of the cab shall have four (4) headlights. The headlights shall be mounted on the front of the cab in the lower position. The headlights shall be day time operational.

BATTERY CHARGER/AIR COMPRESSOR

A Kussmaul Auto-Charge 1200 battery charger and air compressor with automatic battery charger shall be installed.

The battery charger shall be completely automatic with an output of 0-40 amps @ 12 volts DC and an input current requirement of 10 amps @ 120 volts AC.

A Kussmaul air compressor with automatic battery conditioner model 52-21-1100 shall be installed. The battery conditioner is completely automatic with a 0-40 amp output to maintain the charge in the battery system. The air compressor shall be powered by a 12 volt DC output from the battery charger and has an output of **.**30 cfm at 80 PSI. A pressure switch senses the system pressure and operates the compressor whenever the pressure in the air brake system drops below a pre-determined level.

12 VOLT (OR 24 VOLT) OUTLET

A plug-in type receptacle for hand held spotlights, cell phones, chargers, etc. shall be installed In cab driver side on 3 x 3 post rear facing just above engine cover (or seat riser if in a Hush), In cab officer side on 3 x 3 post rear facing just above engine cover (or seat riser if in a Hush), driver side dash, officer side dash, center rear wall of center rear medical compartment up high. The receptacle shall be wired battery hot.

PRE-WIRE

The chassis shall be pre-wired for installation of tire chains. A lock-out/safety rocker style switch shall be installed for activation.

ANTENNA BASE

There shall be a Tessco P/N 90942 universal antenna base mounted on the cab roof with a weatherproof connector. The antenna base shall be NMO Motorola Style (equivalent to a MATM style) with RG58U coax cable. The antenna shall be located driver side forward with coaxial

cable terminating at the center of the dash board, driver side rearward with coaxial cable terminating at the center of the dash board, officer side forward with coaxial cable terminating at the center of the dash board.

BATTERY CHARGER LOCATION

The battery charger shall be located behind driver's seat.

AIR COMPRESSOR LOCATION

The air compressor shall be located behind driver's seat.

CAB USB CHARGING PORT

A dual USB charging port for cell phones, chargers, etc. shall be installed In cab driver side on 3 x 3 post rear facing just above engine cover (or seat riser if in a Hush), In cab officer side on 3 x 3 post rear facing just above engine cover (or seat riser if in a Hush), driver side dash, officer side dash. The receptacles shall be wired battery hot.

DPF REGENERATION OVERRIDE

A momentary override switch shall be provided for the Diesel Particulate Filter (DPF) regeneration. The switch will inhibit the regeneration process until the switch is reset or the engine is shut down and restarted. The switch shall be located within reach of the driver.

LED CAB HEADLIGHTS

Peterson LED headlights shall be provided. LED lights shall be provided in the low and high beam position of the head lamp assembly.

AUTO DRAIN

A Kussmaul model 091-9-086 12V auto drain shall be provided for a Kussmaul 12V air compressor model 091-9-12V.

CAB DOOR STEP AREA LIGHTING

There shall be eight (8) clear TecNiq model D07 LED lights provided to illuminate the cab step well areas. Two (2) lights shall be located at each door area, one (1) above each step. The lights shall have polished stainless steel housings. The lights shall be activated by the cab door ajar circuit.

CAB TURN SIGNALS

A pair of TecNiq LED (Light Emitting Diode) turn signal lights with clear lens shall be installed on the front of the cab. The strip type lights shall be 1.25" high x 15" long and be mounted in a polished cast aluminum housing between the quad bezels.

BODY MODEL

AERIAL BODY

Performance

The body design shall have a rescue configuration on both sides with 26" deep lower compartments and 12" deep upper compartments to provide 181.72 cubic feet of enclosed storage. The cubic footage calculation shall not include ladder tunnels or hosebed.

The body design shall accommodate a 115` of ground ladder storage and up to a 500 gallon water tank without a reduction in water tank capacity or the addition of a tandem axle. A single rear axle is required for maximum compartment space and vehicle maneuverability.

The body design shall be modular to permit easy repair and remount. An extruded aluminum body is required to provide a strong corrosion-resistant vehicle.

Aluminum Construction

The apparatus body shall be constructed entirely of aluminum plate and extrusions. The framework, formed from beveled 6063T5 and 6061T6 alloy extrusions, shall be electrically seam welded both internally and externally at each joint using 5356 aluminum alloy welding wire. The entire exterior body shall be completely sanded and deburred to assure a smooth finish prior to painting. All horizontal surfaces, rear steps, running boards, walkways and the rear body surface will be constructed from aluminum treadplate.

Body Mainframe

The entire vehicle shall be constructed of aluminum extrusions. Body designs that incorporate steel sub-frames connected to aluminum compartments are not as corrosion-resistant and not acceptable.

Frame cross-member extrusions shall be at the front of the body and ahead of the rear wheel well. The extrusions shall be 3" x 3" 6061T6 aluminum with 3/8" wall thickness. A solid 3" x 3" "I" section aluminum extrusion shall be provided full width over the rear wheel well. The cross-members shall be designed to support the compartment framing and shall be welded to a 1-3/16" x 3" solid 6063T5 aluminum frame sill extrusion. The frame sill extrusion shall be shaped to contour with the chassis frame rails and shall be protected from contact with the chassis frame rails with 5/16" x 2" fiber-reinforced rubber strips.

Body Mounting System

The body shall attach to the chassis frame rails with series of 5/8" thick threaded U-bolts. The rear of the body shall be spring mounted to allow for chassis flex. This attachment system shall allow easy removal of the body for major repair or disassembly. Body designs that weld to the aerial torque box or chassis frame rails shall not be acceptable due to the stress imposed on the vehicle during road travel and aerial operations.

Water Tank Mounting System

The water tank shall be mounted on an extruded aluminum framework. The booster tank mounting system shall utilize a floating design to reduce stress from road travel and vibration. To maintain low vehicle center of gravity, the water tank bottom shall be mounted within 5" of the frame rail top. Designs that store ground ladders under the water tank and raise center of gravity shall not be acceptable.

The body design shall allow the booster tank to be completely removable without disturbing or dismounting the apparatus body structure. An extruded aluminum cradle covered with rubber shock pads and corner braces shall support the tank.

Stabilizer Openings

Directly behind the rear wheel well opening on each side shall be body openings for aerial stabilizers. The openings shall be framed in aluminum extrusions and fitted with removable panels for service access to the backside of the stabilizer extension rods.

Rear Aerial Access Staircase

A single 38" wide staircase shall be supplied on the rear of the apparatus for access to the aerial turntable. The angled staircase shall be supplied with extruded aluminum handrails on both sides of the staircase frame

Access steps shall be mounted in accordance with current NFPA requirements, and shall not exceed a maximum stepping height of 18". The top surface of the step shall have a minimum of 35 sq. in. and shall have an aggressive multi-directional, slip-resistant surface. Access steps shall be able to support up to 500 pounds. Steps shall be located to provide a minimum of 8" clearance between the leading edge of the step and any obstruction.

Rear Body Design

A rear tailboard shall be manufactured of 3/16" aluminum treadplate and reinforced with 1 1/2" x 3" aluminum extrusions for strength. The tailboard shall be a bolt-on design for easy repair. A multi-directional aggressive grip surface with drainage capability shall be supplied below the fuel fill area.

Fuel Fill Location

The fuel fill shall be located at the rear of the apparatus next to the waterway inlet. The fuel fill door shall be labeled "Diesel Fuel Only"

Body Top

Removable embossed diamond plate around the aerial turntable shall be supplied for service access to the aerial hydraulic oil reservoir.

Fire Hose Storage

A storage area for fire hose shall be located over the center of the apparatus body under the aerial device. The hosebed shall be approximately 84" long x 70" wide x 18" deep and contain 56 cubic feet of storage.

The hosebed sides shall consist of 3/16" aluminum welded from the backside into a framework of 3" x 3" x 3/16" and 1 1/2" x 4" x 3/16" 6063T5 aluminum slotted extrusions. The extrusions shall be welded both vertically and horizontally for high rigidity.

The hosebed compartment deck shall be constructed entirely from maintenance-free, extruded aluminum. Extrusions shall have an anodized radiused ribbed top surface for maintenance-free service life. Extruded aluminum slats shall be approximately 3/4" x 7 1/2" and shall be riveted into a one-piece grid system to prevent the accumulation of water and allow ventilation to assist in drying hose. The hosebed compartment shall be free of sharp edges and projections to prevent hose damage. The compartment deck design shall incorporate a provision for the installation of adjustable hosebed dividers.

The hosebed shall continue back around the turntable with a hosebed deck on the left and right of the turntable. Each area shall be approximately 13" wide x 10" deep with extruded aluminum hosebed decking slats. Note chute depth is subject to change based on ladder compliment.

Compartments

All body compartment walls and ceilings shall be constructed from 1/8" formed aluminum 3003 H14 alloy plate. Each compartment shall be modular in design and shall not be part of the body support structure.

Compartment floors shall be constructed of 1/8" aluminum diamond plate welded in place. Compartment floors that are over 15" deep shall be supported by a minimum 1.5" x 3" x 1/8" walled aluminum extrusions. The compartment seams shall be sealed using a permanent pliable silicone caulk. A series of louvers shall be supplied to facilitate ventilation of each compartment. Each louver shall be 3" wide by 3/4" tall and 1/2" deep. External compartment tops shall be constructed of 1/8" embossed aluminum diamond plate.

Compartment Sizes

The approximate compartment sizes and locations shall be as follows:

Left Side:
There shall be one (1) compartment (L1) behind the pump module. The compartment shall be approximately 62" wide x 42" high x 12" deep (upper) and 62" wide x 26" high x 26" deep (lower) and contain approximately 42.33 cubic feet of storage space. The door opening shall be approximately 62" wide x 72" high.

There shall be one (1) compartment (L2) over the rear wheels. The compartment shall be approximately 40.5" wide x 31" high x 12" deep and contain approximately 8.72 cubic feet of storage space. The door opening shall be approximately 40.5" wide x 31" high.

There shall be one (1) compartment (L3) over the rear stabilizer. The compartment shall be approximately 40.5" wide x 31" high x 12" deep and contain approximately 8.72 cubic feet of storage space. The door opening shall be approximately 40.5" wide x 31" high.

There shall be one (1) compartment (L4) behind the rear stabilizer. The compartment shall be approximately 53" wide x 31" high x 12" deep (upper) and 30" wide x 26" high x 26" deep (forward lower) and 22"wide x 26"high x 24"deep (rearward lower) contain approximately 31.09 cubic feet of storage space. The door opening shall be approximately 53" wide x 61" high.

Right Side:

There shall be one (1) compartment (R1) behind the pump module. The compartment shall be approximately 62" wide x 42" high x 12" deep (upper) and 62" wide x 26" high x 26" deep (lower) and contain approximately 42.33 cubic feet of storage space. The door opening shall be approximately 62" wide x 72" high.

There shall be one (1) compartment (R2) over the rear wheels. The compartment shall be approximately 40.5" wide x 31" high x 12" deep and contain approximately 8.72 cubic feet of storage space. The door opening shall be approximately 40.5" wide x 31" high.

There shall be one (1) compartment (R3) over the rear stabilizer. The compartment shall be approximately 40.5" wide x 31" high x 12" deep and contain approximately 8.72 cubic feet of storage space. The door opening shall be approximately 40.5" wide x 31" high.

There shall be one (1) compartment (R4) behind the rear stabilizer. The compartment shall be approximately 53" wide x 31" high x 12" deep (upper) and 30" wide x 26" high x 26" deep (forward lower) and 22"wide x 26"high x 24"deep (rearward lower) contain approximately 31.09 cubic feet of storage space. The door opening shall be approximately 53" wide x 61" high.

Handrails

Access handrails shall be provided at all step positions, including, but not limited to, the rear tailboard. All body handrails shall be constructed of maintenance-free, corrosion-resistant, extruded aluminum. Handrails shall be a minimum of 1.25" OD and shall be installed between chrome end stanchions at least 2" from the mounting surface to allow for access with a gloved hand. The extruded aluminum shall be ribbed to assure a good grip for personnel safety.

The handrails shall be installed as follows:

• Two (2) 48" handrails, one (1) each side, located on the aerial access stair case

Steps, Standing, and Walking Surfaces

The maximum stepping distance shall not exceed 18", with the exception of the ground to first step. The ground to first step shall not exceed 24". The ground to first step shall be maintained when the stabilizers are deployed by an auxiliary set of steps installed at the aerial access staircase. All steps or ladders shall sustain a minimum static load of 500 lbs. without deformation as outlined in NFPA 15.7.2.

All exterior steps shall be designed with a minimum slip resistance of 0.52 when tested wet using the Brungraber Mark II tester in accordance with the manufacturer's instructions.

Apparatus Warning Labels

A label shall be supplied on the rear body to warn personnel that riding in or on the rear step is prohibited as outlined in NFPA 1901 15.7.5. A label shall be applied to both sides of the apparatus and the rear to warn operators that the aerial is not insulated.

Rubrail

The body shall have a rubrail along the length of the body on each side and at the rear. The rubrail shall be constructed of minimum 3/16" thick anodized aluminum 6463T6 extrusion. The rubrail shall be a minimum of 2.75" high x 1.25" deep and shall extend beyond the body width to protect compartment doors and the body side.

The rubrail shall be of a C-channel design to allow marker and warning lights to be recessed inside for protection. The top surface of the rubrail shall have a minimum of five (5) serrations raised .1" high with cross grooves to provide a slip-resistant edge for the rear step and running boards. The rubrail shall be spaced away from the body using 3/16" nylon spacers. The ends of each section shall be provided with a rounded corner piece. The area inside the rubrail C-channel shall be inset with a reflective material for increased side and rear visibility.

Pump Module

The apparatus body shall be divided into two (2) individual sections. The pump compartment shall be a separate module from the apparatus body and hosebed compartmentation. This will allow each module to move independently of the other. The pump compartment module shall extend full width of the body.

The pump operator`s control panel and pump compartment shall be located at the front of the body. The operator`s controls and gauges shall be located on the left side (street side) of the apparatus. The compartment shall be designed following NFPA 1901 15.6.

The left and right side pump panels shall be completely removable for easy access to the pump compartment. Each panel shall be split approximately two-thirds of the way from the bottom by an anodized extrusion, which shall allow removal of the left side upper panel for easy access to gauges.

A side running board formed from1/8" aluminum diamond plate shall be provided and shall extend the full length of the pump module on each side of the apparatus. The running board shall be bolted to the pump compartment for rigidity and to provide easy removal for replacement in the case of damage.

ISO Compliance

The manufacturer shall ensure that the construction of the apparatus aerial body shall be in conformance with the established ISO-compliant quality system. All written quality procedures and other procedures referenced within the pages of the manufacturer`s Quality Manual, as well as all Work Instructions, Workmanship Standards, and Calibration Administration that directly or indirectly impacts this process shall be strictly adhered to. By virtue of its ISO compliance the manufacturer shall provide an apparatus aerial device that is built to exacting standards, meets the customer`s expectations, and satisfies the customer`s requirements.

BODY COMPT REAR

REAR BODY PLATEWORK

The rear body platework shall be smooth un-painted aluminum plate to facilitate rear body striping.

AERIAL BODY OPTIONS

TRIPLE CROSSLAY HOSEBED

Three (3) crosslay hosebeds shall be provided at the front area of the body. Each of the three (3) crosslay sections shall have a capacity for up to 200` of 2.0" double-jacket fire hose single stacked and preconnected to the pump discharge. The crosslay decking shall be constructed entirely of maintenance-free 3/4" x 2-3/4" hollow aluminum extrusions.

Stainless steel rollers with nylon guides set in aluminum extrusions shall be installed horizontally and vertically on each end of the crosslay to allow easy deployment of the hose and help protect the body paint.

Dunnage Pan

A dunnage pan constructed of 3/16" (.188") aluminum treadplate shall be located rearward of the crosslays. The dunnage pan shall be sized to maximize available storage space.

REAR PIKE POLE STORAGE

Pike poles storage shall be provided at the rear of the body for six (6) pike poles. The storage area shall be labeled for two (2) 6` poles, two (2) 8` poles, and two (2) 12` poles. The pike poles shall be secured by either "J" slotted locking tubes and/or hinged door(s) that matches the rear body finish.

LADDER TUNNEL DOORS

A pair of 1/8" (.125) aluminum diamond plate doors with D-ring style handles shall be installed for access to the rear ladder tunnel. Each door shall open a full 90 degrees to allow easy removal of ground ladders.

OUTRIGGER COVERS

Two (2) piece outrigger covers constructed of 14 gauge brushed finish stainless steel plate shall be provided for the jack leg openings. One piece of the cover shall be sized to cover just the extending outrigger in order to require a minimal amount of set-up space. The second piece of the cover shall be fixed and mounted to the body to cover the remaining outrigger opening.

AUXILIARY GROUND PADS

Two (2) auxiliary ground pads shall be provided. The pads shall be 24" x 24" x 1/2" thick aluminum plate with a 20 degree formed handle with cutout for hand hold. The pads shall be stored in brackets that are welded below the body.

DOORS

SINGLE COMPARTMENT DOOR

A single compartment door shall be constructed using a box pan configuration. The outer door pan shall beveled and shall be constructed from 3/16" (0.188") aluminum plate. The inner door pan shall be constructed from 3/32" (0.090") smooth aluminum plate and shall have nutsert fittings to attach hold-open hardware. The inner pan shall have a 95-degree bend to form an integral drip rail.

The compartment door shall have a 1" x 9/16" (1" x 0.43") closed-cell "P" EPDM sponge gasket meeting ASTM D-1066 2A4 standards installed around the perimeter of the door to provide a seal that is resistant to oil, sunlight, and ozone.

A drain hole shall be installed in the lower corner of the inside door pan to assist with drainage.

A polished stainless steel Hansen D-ring style twist-lock door handle a with #459 latch shall be provided on the door. The 4-1/2" (4.5") D-ring handle shall be mounted directly to the door

latching mechanism with screws that do not penetrate the door material for improved corrosion resistance.

The compartment door shall be securely attached to the apparatus body with a full-length stainless steel 1/4" (0.25") rod piano-type hinge isolated from the body and compartment door with a dielectric barrier. The door shall be attached with machine screws threaded into the doorframe. The door shall have gas shock-style hold-open devices.

An anodized aluminum drip rail shall be mounted over the compartment opening to assist in directing water runoff away from the compartment.

The door(s) shall be installed in the following location(s): L2, L3, R2, R3

PAINTED ROLL UP COMPARTMENT DOOR

A ROM brand roll up door painted job color shall be provided on a compartment greater than 45" tall. The door(s) shall be installed in the following location(s): L1, L4, R1, R4.

The Robinson door slats shall be double wall box frame and manufactured from anodized aluminum. The slats shall have interlocking end shoes on each slat. The slats shall have interlocking joints with a PVC/vinyl inner seal to prevent any metal to metal contact and inhibit moisture and dust penetration.

The track shall be painted aluminum with a finishing flange incorporated to provide a finished look around the perimeter of the door without additional trim or caulking. The track shall have a replaceable side seal to prevent water and dust from entering the compartment.

The doors shall be counterbalanced for ease in operation. A full width latch bar shall be operable with one hand, even with heavy gloves. Securing method shall be a positive latch device.

A magnetic type switch integral to the door shall be supplied for door ajar indication and compartment light activation.

The door opening shall be reduced by 2" in width and approximately 8-9" in height depending on door height.

DRIP PAN

Drip pan (E-ONE style) for a roll-up door (EA). Location(s): L1, L4, R1, R4.

SHELVES

ADJUSTABLE SHELF [QTY: 9]

There shall be an aluminum adjustable shelf provided for a compartment as specified.

The shelf shall be constructed of 3/16" (.187") smooth aluminum plate. The shelf shall have a minimum 2" front and rear lips to accommodate optional plastic interlocking compartment tile systems and shall be capable of holding 100 lbs on compartments with tracks mounted on back wall (compartments up to appoximately 12" deep) or shall be capable of holding 250 lbs with tracks mounted on forward and rearward walls.

The shelf shall be sized, width and depth, to match the size and location in the compartment.

COMPARTMENT DIVIDERS

PARTITION VERTICAL BOLT-IN

Partition, bolt-in vertical partition wall. Locate in a compartment as specified. Partition constructed out of 3/16" 3003 smooth plate.

TRAYS / TOOLBOARDS

ROLL-OUT TILT DOWN TRAY

A roll-out/tilt-down tray(s) shall be floor mounted in compartment(s) as specified.

The tray(s) shall be constructed of 3/16" (.187") smooth aluminum plate with welded corners for increased strength and rigidity. The tray shall be sized in width and depth as applicable.

An Innovative Industries SlideMaster (model MT) aluminum tip down frame and channel assembly shall be provided for the tray(s) for the ease of operation and long service life. A positive twist lock shall be provided to secure the tray(s) in the stored position. The tray(s) shall roll-out approximately 90% from the stored position and shall tip 30 degrees downward from horizontal.

The capacity rating of the tray, in the extended position, shall be 200 lb. uniformly distributed load.

TOOLBOARD [QTY: 2]

A fixed wall mounted peg toolboard(s) shall be provided in a compartment as specified.

The peg toolboard shall be constructed of 3/16" (.187") smooth aluminum plate with a sanded finish and shall be sized in height and width as applicable.

The peg toolboard(s) shall be spaced off the wall to allow easier mounting of tools and/or equipment.

PEG TOOLBOARD(S)

Adjustable roll-out aluminum peg toolboard shall be provided for a compartment as specified.

The toolboard shall be constructed of 3/16" (.187") smooth aluminum plate with a sanded finish and be sized in height and depth as applicable.

The toolboard shall be mounted on an aluminum SlideMaster (model AM3-TB) evenly distributed capacity slide assembly with angle type guide runners at the top that will permit the board to roll out of the compartment for easier access to tools and/or equipment. The slide mechanism(s) shall have sealed roller bearings for ease of extension and retraction operation and dependable service.

The toolboard(s) shall be mounted at the top and bottom on adjustable tracking for ease of placement and shall extend out 100% of the depth of the slide.

The capacity rating shall be 600 lbs. maximum at full extension. A mechanical lock shall be utilized to secure the toolboard(s) in the open and closed position.

ROLL-OUT TRAY

There shall be a floor mounted SlideMaster with roll-out tray provided in a compartment as specified.

The roll-out tray shall be constructed of 3/16" (.187) smooth aluminum with welded corners for strength and rigidity. The tray shall be sized in width and depth as applicable.

An Innovative Industries SlideMaster (model AM3) aluminum frame and channel assembly shall be provided for the tray for the ease of operation and long service life. A positive twist lock shall be provided to lock the tray in the stored position. The tray shall roll out approximately 100% from the stored position.

The capacity rating shall be 600 pounds uniformly distributed load.

COVERS

HOSE BED COVER

A cover constructed of Red 18 oz. PVC vinyl coated polyester shall be installed over the apparatus hose bed. The base fabric shall be 1000 x 1300 Denier Polyester with a fabric count of 20 x 20 square inch.

The front edge of the cover shall be mechanically attached to the body. The sides of the cover shall be held in place with heavy duty Velcro strips running the length of the hose bed. The rear of the cover shall have an integral flap that extends down to cover the rear of the hose bed.This flap shall be secured in place along the lower edge with flexible cord that fasten to steel hook(s) mounted to body to comply with the latest edition of NFPA 1901.

VINYL CROSSLAY COVER

A cover constructed of Red 18 oz. PVC vinyl coated polyester shall be installed on the crosslay. The base fabric shall be 1000 x 1300 Denier Polyester with a fabric count of 20 x 20 per square inch.

The cover shall be held in place across the top of the body by chrome snaps. The sides of the cover shall have integral flaps that extend down to cover the sides of the crosslay. The side flaps shall be secured in place to comply with the latest edition of NFPA 1901.

PUMP MODULE

PUMP PANELS

SIDE MOUNT PUMP PANELS

The driver and officer side pump panels shall be constructed of 14 gauge stainless steel. Each panel shall have the ability to be removed from the module for easier access and for maintenance in the pump area.

PUMP ACCESS DOOR

The officer side pump module shall include an upper horizontal hinged pump access door.

The door shall be constructed of 14 gauge brushed stainless steel. The compartment door shall be securely attached with a full-length stainless steel piano type hinge with 1/4" pins. The hinge shall be "staked" on every other knuckle to prevent the pin from sliding. The door shall include two (2) push-button style latches to secure the door in the closed position and two (2) hold-open devices to hold the door in the open position.

MISC PUMP PANEL OPTIONS

PUMP PANEL TAGS

Color coded pump panel labels shall be supplied to be in accordance with NFPA 1901 compliance.

WATER TANK

BOOSTER TANK

The booster tank shall be T-shaped in configuration and shall have a useable capacity of 500 gallons (U.S.).

The booster tank shall be constructed of polypropylene material. The booster tank shall be completely removable without disturbing or dismounting the apparatus body structure. The top of the booster tank is fitted with removable lifting assembly designed to facilitate tank removal.

The booster tank top, sides, and bottom shall be constructed of a minimum 1/2" (0.50") thick black UV-stabilized copolymer polypropylene. Joints and seams shall be fused using nitrogen gas as required and tested for maximum strength and integrity. The tank construction shall include technology wherein a sealant shall be installed between the plastic components prior to being fusion welded. This sealing method will provide a liquid barrier offering leak protection in the event of a weld compromise. The tank cover shall be constructed of 1/2" thick polypropylene and UV stabilized, to incorporate a multi-piece locking design, which allows for individual removal and inspection if necessary. The tank cover(s) shall be flush or recessed 3/8" from the top of the tank and shall be fused to the tank walls and longitudinal partitions for maximum integrity. Each one of the covers shall have hold downs consisting of 2" minimum polypropylene dowels spaced a maximum of 40" apart. These dowels shall extend through the covers and will assist in keeping the covers rigid under fast filling conditions.

The tank shall have a combination vent and manual fill tower with a hinged lid. The fill tower shall be constructed of 1/2" polypropylene and shall be a typical dimension of 8" x 8" outer perimeter (subject to change for specific design applications). The fill tower shall be blue in color indicating that it is a water-only fill tower. The tower shall have a 1/4" thick removable polypropylene screen and a polypropylene hinged cover. The capacity of the tank shall be engraved on the top of the fill tower lid.

The booster tank shall have two (2) tank plumbing openings. One (1) for a tank-to-pump suction line with an anti-swirl plate, and one (1) for a tank fill line. All tank fill couplings shall be backed with flow deflectors to break up the stream of water entering the tank, and be capable of withstanding sustained fill rates per the tank fill inlet size.

The sump shall be constructed of a minimum of 1/2" polypropylene. The sump shall have a minimum 3" N.P.T. threaded outlet for a drain plug per NFPA. This shall be used as a combination clean-out and drain. All tanks shall have an anti-swirl plate located approximately 3" above the inside floor.

The transverse and longitudinal swash partitions shall be manufactured of a minimum of 3/8" polypropylene. All partitions shall be equipped with vent and air holes to permit movement of air and water between compartments. The partitions shall be designed to provide maximum water flow. All swash partitions interlock with one another and are completely fused to each other as well as to the walls of the tank. All partitions and spacing shall comply with NFPA 1901. The walls shall be welded to the floor of the tank providing maximum strength.

Inside the fill tower there shall be a combination vent/overflow pipe. The vent overflow shall be a minimum of schedule 40 polypropylene pipe with an I.D. of 3" or larger that is designed to run through the tank. This outlet shall direct the draining of overflow water past the rear axle, thus reducing the possibility of freeze-up of these components in cold environments. This drain

configuration shall also assure that rear axle tire traction shall not be affected when moving forward.

The booster tank shall undergo extensive testing prior to installation in the truck. All water tanks shall be tested and certified as to capacity on a calibrated and certified tilting scale.

Each tank shall be weighed empty and full to provide precise fluid capacity. Each tank shall be delivered with a Certificate of Capacity delineating the weight empty and full and the resultant capacity based on weight. Engineering estimates for capacity calculations shall not be permitted for capacity certification. The tank must be designed and fabricated by a tank manufacturer that is ISO 9001:2008 certified in each of its locations. The ISO certification must be to the current standard in effect at the time of the design and fabrication of the tank.

A tag shall be installed on the apparatus in a convenient location and contain pertinent information including a QR code readable by commercially available smart phones. The information contained on the tag shall include the capacity of the water and foam (s), the maximum fill and pressure rates, the serial number of the tank, the date of manufacture, the tank manufacturer, and contact information. The QR code will allow the user to connect with the tank manufacturer for additional information and assistance.

The tank shall have a limited Lifetime warranty that provides warranty service for the life of the fire apparatus in which the tank is installed. Warranties are transferable if the apparatus ownership changes by requesting the transfer from the tank manufacturer.

TANK PLUMBING

TANK FILL 2 AKRON VALVE

One (1) 2" pump-to-tank fill line having a 2" manually operated full flow valve. The valve control shall be located at the pump operator`s panel and shall visually indicate the position of the valve at all times. The fill line shall be controlled using a chrome handle with an integral tag.

The valve shall be an Akron 8800HD series with a 316 stainless steel ball and dual polymer seats for ease of operation and increased abrasion resistance. The valve shall have a self-locking ball feature using an automatic friction lock design to balance the stainless steel ball when in a throttle position with water flowing through it.

The valve shall be of unique Akron swing-out design to allow the valve body to be removed for servicing without disassembling the plumbing.

All fabricated piping shall be a minimum of Schedule 10 stainless steel for superior corrosion resistance and decreased friction loss.

TANK TO PUMP, 3" AKRON VALVE

One (1) manually operated 3" Akron valve shall be installed between the pump suction and the booster tank in order to pump water from the tank. The valve control shall be located at the pump operator`s panel and shall visually indicate the position of the valve at all times.

The valve shall be an Akron 8800HD series with a 316 stainless steel ball and dual polymer seats for ease of operation and increased abrasion resistance. The valve shall have a self locking ball feature using an automatic friction lock design to balance the stainless steel ball when in a throttle position and water is flowing through it.

The valve shall be of the unique Akron swing-out design to allow the valve body to be removed for servicing without disassembling the plumbing.

All fabricated piping shall be a minimum of Schedule 10 stainless steel for superior corrosion resistance and decreased friction loss.

LADDER STORAGE / RACKS

GROUND LADDER STORAGE

Ladder tunnels shall be provided at the rear of the apparatus on either side of the turntable, and directly under the hose chutes. The ladder rack shall hold: PEL3-35, PEL-24, (2)PRL-16 and FL-10 with rubber block feet. Requires roof ladder option on base section of aerial to meet 115' NFPA requirement

The ladders will be held captive top and bottom by aluminum tracks and slide on friction reducing material. All ladders shall be removable individually without having to remove any other ladder.

LADDER TUNNEL ENCLOSURE

The forward end of the ladder tunnel(s) shall have a box type enclosure to allow for doors at the rear of the ladder tunnel.

BRACKET HORIZONTAL LADDER

Extension ladder mounting assembly shall consist of a 1/8" diamond plate boot bolted to the compartment top and a chrome plated handle to secure the ladder into the boot.

Location and type of ladder: top of body officer side for a Little Giant Model 17.

HANDRAILS / STEPS

HAND RAIL INSERTS

All applicable cab, pump module and body mounted hand rails shall have a rubber insert. The rubber inserts shall provide increased gripping for ground personnel accessing or egressing the apparatus.

SLIDE-OUT PLATFORM

A slide-out platform shall be provided integral with the driver side running board adjacent to the pump panel. The platform shall be 21" deep and shall be constructed of 1/8" (0.125") aluminum treadplate with a multi-directional, aggressive gripping surface. The platform shall utilize a maintenance-free slide system incorporating stainless steel shoulder bolts that slide in slotted heavy-wall aluminum angles. Notches shall be provided at each end of the slots to hold the platform in both the extended and retracted positions.

The NFPA pump throttle height requirement shall be measured from the top of the slide-out platform on all aerials and from the ground on side mounted pump operator panels on non-aerial apparatus.

HANDRAIL

Handrail(s) shall be installed in compliance with current NFPA. The handrail(s) shall be located Officer side pump module up high, Driver side pump module up high.

The handrail(s) shall be constructed of 6063T5 1.25" OD anodized aluminum tube, with an integral ribbed surface to assure a good grip for personnel safety, mounted between chrome stanchions.

AUXILIARY STEP

A step below the body shall be provided. The step shall be constructed of .188" aluminum tread brite. The step surface shall be provided with an aggressive skid-resistant surface. The step shall be in accordance with current NFPA requirements and shall include a multi-directional aggressive gripping surface incorporated into the diamond plate. The surface shall extend vertically from the diamond plate sheet a minimum of 1/8" (0.125"). Gripping surfaces shall be circular in design, a minimum of 1" diameter and on centers not to exceed 4". The step shall be located below rear of officer side pump panel.

One (1) handrail shall be installed in compliance with current NFPA. The handrail shall be constructed of 6063T5 1.25" OD anodized aluminum tube, with an integral ribbed surface to assure a good grip for personnel safety, mounted between chrome stanchions.

FLOP DOWN STEP

A single rear flop down step shall be provided at the back of the unit to reduce the stepping height from ground to tailboard. The step shall be constructed of .125" aluminum diamond plate. Side brackets constructed of .375" aluminum plate shall support the fabricated step. The step

shall be approximately 36" wide and come with a locking device to hold the step up in the stored position. The step shall not reduce the angle of departure.

MISC BODY OPTIONS

MUD FLAPS

Black mud flaps with E-ONE logo shall be provided for the body wheel wells.

SWIRLED FINISH

The body compartment interior (ceilings and walls) shall have a swirl finish. The swirl finish shall also be included on the inner pan of hinged doors and compartment floors (if smooth plate) and tool compartments (as applicable). Compartment floors shall remain diamond plate if so equipped.

ANODIZE ALUMINUM TRIM

A anodize aluminum trim shall be located at the bottom edge of all body compartment openings including pump enclosure with painted edge (as applicable). The trim shall provide added protection of the painted surface of the body when equipment is removed from the compartment.

BODY WHEEL WELL

The body wheel well frame shall be constructed from 6063-T5 aluminum extrusion with a slot the full length to permit an internal fit of 1/8" (0.125") aluminum tread plate. The wheel well trim shall be constructed from 6063-T5 formed aluminum extrusion.

The fenderettes shall be bolt-on and shall be easily removable. The fenderette shall be constructed from .080" aluminum with a mirror finish. The fenerette shall be 2 1/2" (2.5") wide x 2 1/4" (2.25") tall with a 26 7/8" (26.875") radius. A "P" shaped rubber gasket shall be provided between the fenerette and wheel well body panel.

The wheel well liners shall be constructed of a 3/16" (.187") composite material. The liners shall be bolt-on and shall provide a maintenance-free and damage-resistant surface.

SCBA BOTTLE STORAGE

SCBA WHEEL WELL BOTTLE STORAGE

The body wheel well area shall store up to four (4) SCBA bottles- two (2) on the officer side and two (2) on the driver side. The bottles shall be secured in each storage area by a vertical hinged door which shall be secured in the closed position by a push button latch. The doors shall have a brushed stainless steel finish.

Each storage area shall provide individual storage of a bottle and shall not allow forward or rearward movement of the bottle. The bottle(s) shall be removable from the storage area without the bottle(s) coming into contact with any surface area of the wheel well (NO EXCEPTIONS).

SCBA STRAP

Straps shall be provided in each exterior storage compartment to provide secondary means to hold each SCBA bottle in the compartment. The straps shall be constructed from 1" nylon webbing formed in a loop. The strap(s) shall be mounted to the storage compartment ceiling directly inside the door opening at each bottle location.

PUMPS

PUMP RATING

The fire pump shall be rated at 1500 GPM.

FIRE PUMP SYSTEM

The pump shall be a midship mounted Waterous CSU 1500-2250 single stage centrifugal pump. The pump shall be mounted on the chassis frame rails and shall be split-shaft driven.

The entire pump body and related parts shall be of fine grain alloy cast iron, with a minimum tensile strength of 30,000 psi (207 (MPa). All metal moving parts in contact with water shall be of high quality bronze or stainless steel. Pump body shall be horizontally split in two (2) sections, for easy removal of impeller assembly including wear rings and bearings from beneath the pump without disturbing pump mounting or piping.

The pump impeller shall be hard, fine grain bronze of the mixed flow design and shall be individually ground and hand balanced. Impeller clearance rings shall be bronze, easily renewable without replacing impeller or pump volute body, and of wrap-around double labyrinth design for maximum efficiency.

The impeller shaft shall be stainless steel, accurately ground with a 2-3/4" diameter spline shaft, and shall be rigidly supported at each end by oil or grease-lubricated anti-friction ball bearings for rigid and precise support. Bearings shall be protected from water and sediment by suitable stuffing boxes, flinger rings, and oil seals. The remaining bearings shall be heavy duty, deep groove ball bearings in the gearbox and shall be splash lubricated. Pump shaft must be sealed with double-lip oil seal to keep road dirt and water out of the gearbox.

Two (2) 6" diameter suction ports with 6" NST male threads and removable screens shall be provided, one each side. The ports shall be mounted one on each side of the midship pump and shall extend through the side pump panels. Inlets shall come equipped with long handle chrome caps.

Stuffing boxes shall be integral with the pump body and be equipped with two-piece glands to permit adjustment or replacement of packing without disturbing pump. Lantern rings shall be located at inner ends of stuffing boxes so that all rings of packing can be removed without removal of the lantern rings. Water shall be fed into stuffing box lantern rings for proper lubrication and cooling when pump is operating.

Discharge Manifold

The pump system shall utilize a stainless steel discharge manifold system that allows a direct flow of water to all discharge valves. The manifold and fabricated piping systems shall be constructed of a minimum of Schedule 10 stainless steel to reduce corrosion.

Pump Shift

The pump shift shall be pneumatically controlled using a power shifting cylinder.

The power shift control valve shall be mounted in the cab, and be labeled "PUMP SHIFT". The apparatus transmission shift control shall be furnished with a positive lever, preventing accidental shifting of the chassis transmission.

A green indicator light shall be located in the cab, and be labeled "PUMP ENGAGED". The light shall not activate until the pump shift has completed its full travel into pump engagement position.

A second green indicator light shall be located in the cab and be labeled "OK TO PUMP". This light shall be energized when both the pump shift has been completed and the chassis automatic transmission has obtained converter lock-up (4th gear lock-up).

Test Ports

Two (2) test plugs shall be pump panel mounted for third party testing of vacuum and pressures of the pump.

PUMP CERTIFICATION

PUMP CERTIFICATION

The pump, when dry, shall be capable of taking suction and discharging water in accordance with current NFPA 1901. The pump shall be tested at the manufacturer`s facility by an independent, third-party testing service. The conditions of the pump test shall be as outlined in current NFPA 1901.

The tests shall include, at a minimum, the pump test, the pumping engine overload test, the pressure control system test, the priming device tests, the vacuum test, and the water tank to pump flow test as outlined in current NFPA 1901.

A piping hydrostatic test shall be performed as outlined in current NFPA 1901.

The pump shall deliver the percentage of rated capacities at pressures indicated below:

- 100% of rated capacity at 150 psi net pump pressure
- 100% of rated capacity at 165 psi net pump pressure
- 70% of rated capacity at 200 psi net pump pressure
- 50% of rated capacity at 250 psi net pump pressure

A test plate, installed at the pump panel, shall provide the rated discharges and pressures together with the speed of the engine as determined by the certification test, and the no-load governed speed of the engine.

A Certificate of Inspection certifying performance of the pump and all related components shall be provided at time of delivery. Additional certification documents shall include, but not limited to, Certificate of Hydrostatic Test, Electrical System Performance Test, Manufacturer`s Record of Pumper Construction, and Certificate of Pump Performance from the pump manufacturer.

PUMP OPTIONS

WATEROUS OVERHEAT PROTECTION MANAGER

A Waterous Overheat Protection Manager shall be provided and located at the pump operator`s panel. The device shall consist of a valve that opens when the water in the pump reaches 140 degrees F and a warning light shall be triggered by a thermal switch when the water in the pump reaches 180 degrees F. The Overheat Protection Manager shall act as a safety device by releasing hot water from the discharge area of the pump to the ground or back to a water tank.

STEAMERS, FLUSH+1

The pump 6" steamer intake(s) shall be mounted approximately 1" from the pump panel to back of cap when installed. The "Flush+1" dimension can vary + or - 1-1/4" or as practicable depending on the pump module width and options selected. (Example 72" or 76" modules.)

Location: driver's side, officer's side.

PUMP SEAL, MECHANICAL

A mechanical seal shall be supplied with the pump and shall include an alternate seal housing that shall be equipped with self-adjusting, maintenance-free, mechanical shaft seals which eliminates the need for packing.

MANUAL MASTER DRAIN

A manual master drain valve shall be installed and operated from the driver side. The master pump drain assembly shall consist of a Class 1 bronze master drain with a rubber disc seal.

The manual master drain valve shall have twelve (12) individually-sealed ports that allow quick and simultaneous draining of multiple intake and discharge lines. It shall be constructed of corrosion-resistant material and be capable of operating at a pressure of up to 600 PSI.

The master drain shall provide independent ports for low point drainage of the fire pump and auxiliary devices.

PUMP COOLER

The pump shall have a 3/8" line installed from the pump discharge to the booster tank to allow a small amount of water to circulate through the pump casing in order to cool the pump during sustained periods of pump operation when water is not being discharged. The pump cooler line shall be controlled from the pump operator`s panel by a Innovative Controls 1/4 turn valve with "T" handle. Each 1/4 turn handle grip shall feature built-in color-coding labels and a verbiage tag

PRIMING SYSTEM

An electrically-driven Waterous priming pump shall be provided for the water pump. The pump shall be a rotary vane type that is oil-free.

One (1) priming control, located at the pump operator`s position, shall open the priming valve and start the priming motor. The priming valve shall be electronically interlocked to the "Park Brake" circuit to allow priming of the pump before the pump is placed in gear.

INTAKES

LEFT INTAKE 2.5 AKRON VALVE

One (1) 2-1/2" suction inlet with a manually operated 2-1/2" Akron valve shall be provided on the left side pump panel.

The valve shall be an Akron 8800HD series with a 316 stainless steel ball and dual polymer seats for ease of operation and increased abrasion resistance. The valve shall have a self-locking ball feature using an automatic friction lock design to balance the stainless steel ball when in a throttle position and water is flowing through it.

The valve shall be of the unique Akron swing-out design to allow the valve body to be removed for servicing without disassembling the plumbing.

The outlet of the valve shall be connected to the suction side of the pump with the valve body located behind the pump panel. The valve shall come equipped with a brass inlet strainer, 2-1/2"

NST female chrome inlet swivel, and shall be equipped with a chrome plated rockerlug plug with a retainer device.

The valve control shall be located at the pump operator`s panel and shall visually indicate the position of the valve at all times.

All fabricated piping shall be a minimum of Schedule 10 stainless steel for superior corrosion resistance, and decreased friction loss.

A 3/4" bleeder valve assembly will be installed on the left side pump panel.

RIGHT INTAKE 2.5 AKRON VALVE

One (1) 2-1/2" gated suction inlet with a manual operated Akron valve shall be installed in the right side pump panel with the valve body behind the panel. The valve control shall be located at the intake and shall visually indicate the position of the valve at all times.

The valve shall be an Akron 8800HD series with a 316 stainless steel ball and dual polymer seats for ease of operation and increased abrasion resistance. The valve shall have a self-locking ball feature using an automatic friction lock design to balance the stainless steel ball when in a throttle position and water is flowing through it.

The valve shall be of the unique Akron swing-out design to allow the valve body to be removed for servicing without disassembling the plumbing.

The outlet of the valve shall be connected to the suction side of the pump with the valve body located behind the pump panel. The valve shall come equipped with a brass inlet strainer, 2-1/2" NST female chrome inlet swivel and shall be equipped with a chrome plated rockerlug plug with a retainer device.

All fabricated piping shall be a minimum of Schedule 10 stainless steel for superior corrosion resistance, and decreased friction loss.

A 3/4" bleeder valve assembly will be installed on the right side pump panel.

INTAKE OPTIONS

INTAKE PRESSURE RELIEF

A18 Series - PRESSURE RELIEF VALVE - TFT`s pressure relief valve is adjustable from 50 to 250 psi (3 to 14 bar) with easy to see 25 psi (2 bar) increments. The aluminum casting is plastic impregnated, hard coat anodized, and TFT powder coat finished inside and out for maximum corrosion protection. Works with Darley, Waterous, or Hale bolt hole patterns for direct use on pump flanges.

DISCHARGES AND PRECONNECTS

FRONT JUMP LINE 1.5 AKRON VALVE

One (1) 1-1/2" preconnect outlet with a manually operated Akron valve shall be supplied to the extended front bumper. The preconnect shall consist of a 2" heavy duty hose coming from the pump discharge manifold to a 2" FNPT x 1-1/2" MNST mechanical swivel hose connection to permit the use of the hose from either side of the apparatus.

The valve shall be an Akron 8800HD series with a 316 stainless steel ball and dual polymer seats for ease of operation and increased abrasion resistance. The valve shall have a self-locking ball feature using an automatic friction lock design to balance the stainless steel ball when in a throttle position with water flowing through it.

The valve shall be of the unique Akron swing-out design to allow the valve body to be removed for servicing without disassembling the plumbing.

An air blow-out valve shall be installed between the chassis air reservoir and the front jump line. The control shall be installed on the pump operator`s panel.

The discharge shall be supplied with a Class 1 automatic 3/4" drain valve assembly. The automatic drain shall have an all-brass body with stainless steel check assembly. The drain shall normally be open and automatically close when the pressure is greater than 6 psi.

The valve control shall be located at the pump operator panel and shall visually indicate the position of the valve at all times.

All fabricated piping shall be a minimum of Schedule 10 stainless steel for superior corrosion resistance and decreased friction loss.

LEFT FRONT 2.5 HOSE BED AKRON VALVE

One (1) 2-1/2" preconnect outlet with a manually operated Akron valve shall be supplied to the lower left of the apparatus hose bed. The preconnect shall consist of a 2-1/2" heavy-duty hose coming from the pump discharge manifold to a 2-1/2" adapter.

The valve shall be an Akron 8800HD series with a 316 stainless steel ball and dual polymer seats for ease of operation and increased abrasion resistance. The valve shall have a self-locking ball feature using an automatic friction lock design to balance the stainless steel ball when in a throttle position with water flowing through it.

The valve shall be of the unique Akron swing-out design to allow the valve body to be removed for servicing without disassembling the plumbing.

The valve control shall be located at the pump operator panel and shall visually indicate the position of the valve at all times.

All fabricated piping shall be a minimum of Schedule 10 stainless steel for superior corrosion resistance and decreased friction loss.

WATERWAY 4 DISCHARGE WITH 3 AKRON VALVE

One (1) 4" discharge outlet with a 3" manually operated Akron valve shall be connected from the pump discharge to the aerial waterway.

The valve shall be an Akron 8800HD series with a 316 stainless steel ball and dual polymer seats for ease of operation and increased abrasion resistance. The valve shall have a self-locking ball feature using an automatic friction lock design to balance the stainless steel ball when in a throttle position with water flowing through it.

The valve shall be of the unique Akron swing-out design to allow the valve body to be removed for servicing without disassembling the plumbing.

The valve control shall be located at the pump operator`s panel and shall visually indicate the position of the valve at all times.

All fabricated piping shall be a minimum of Schedule 10 stainless steel for superior corrosion resistance and decreased friction loss.

FRONT BUMPER DISCHARGE SWIVEL, BRASS IN TRAY

There shall be a brass swivel provided for the front bumper discharge located in hose tray center front bumper on lower back wall.

1.5 SINGLE CROSSLAY AKRON VALVE [QTY: 2]

One (1) single crosslay discharge shall be provided at the front area of the body. The crosslay shall include one (1) 2" brass swivel with a 1-1/2" hose connection to permit the use of hose from either side of the apparatus.

The crosslay hose bed shall consist of a 2" heavy-duty hose coming from the pump discharge manifold to the 2" swivel. The hose shall be connected to a manually operated 2" Akron valve. The valve shall be an Akron 8800HD series with a 316 stainless steel ball and dual polymer seats for ease of operation and increased abrasion resistance. The valve shall have a self-locking ball feature using an automatic friction lock design to balance the stainless steel ball when in a throttle position with water flowing through it.

The valve shall be of the unique Akron swing-out design to allow the valve body to be removed for servicing without disassembling the plumbing.

The valve control shall be located at the pump operator`s panel and shall visually indicate the position of the valve at all times.

All fabricated piping shall be a minimum of Schedule 10 stainless steel for superior corrosion resistance and decreased friction loss.

Location: crosslay 1 & 2.

SINGLE CROSSLAY 2.5 AKRON VALVE

One (1) single crosslay discharge shall be provided at the front area of the body. The crosslay shall have one (1) 2-1/2" mechanical swivel hose connection to permit the use of the hose from either side of the apparatus.

The crosslay hose bed shall consist of a 2-1/2" heavy-duty hose coming from the pump discharge manifold to the 2-1/2" swivel. The hose shall be connected to a manually operated 2-1/2" Akron valve. The valve shall be an Akron 8800HD series with a 316 stainless steel ball and dual polymer seats for ease of operation and increased abrasion resistance. The valve shall have a self-locking ball feature using an automatic friction lock design to balance the stainless steel ball when in a throttle position with water flowing through it.

The valve shall be of the unique Akron swing-out design to allow the valve body to be removed for servicing without disassembling the plumbing.

The valve control shall be located at the pump operator`s panel and shall visually indicate the position of the valve at all times.

All fabricated piping shall be a minimum of Schedule 10 stainless steel for superior corrosion resistance and decreased friction loss.

Location: crosslay 3.

DISCHARGE LEFT PANEL 2.5 AKRON DROOP

One (1) 2-1/2" discharge outlet with a manually operated Akron valve shall be provided at the left hand side pump panel.

The valve shall be an Akron 8800HD series with a 316 stainless steel ball and dual polymer seats for ease of operation and increased abrasion resistance. The valve shall have a self-locking ball feature using an automatic friction lock design to balance the stainless steel ball when in a throttle position and water is flowing through it.

The valve shall be of the unique Akron swing-out design to allow the valve body to be removed for servicing without disassembling the plumbing.

The valve control shall be located at the pump operator panel and shall visually indicate the position of the valve at all times.

The discharge shall extend out beyond the pump panel with a 30 degree downward angle with 2-1/2" NST threads to help prevent kinking of the discharge hose. The 30 degree chrome droop shall be an integral part of the discharge valve and shall be equipped with a chrome plated rocker lug cap with a retainer chain.

The discharge shall be supplied with a 3/4" bleeder valve assembly. The bleeder valve shall be installed to drain water from the gauge pressure line to prevent freezing of the line. The drain shall be controlled with a quarter-turn valve on the pump panel.

All fabricated piping shall be a minimum of Schedule 10 stainless steel for superior corrosion resistance and decreased friction loss.

Location: left side discharge 1, left side discharge 2.

DISCHARGE RIGHT PANEL 2.5 AKRON DROOP

One (1) 2-1/2" discharge outlet with a manually operated Akron valve shall be provided at the right side pump panel.

The valve shall be an Akron 8800HD series with a 316 stainless steel ball and dual polymer seats for ease of operation and increased abrasion resistance. The valve shall have a self-locking ball feature using an automatic friction lock design to balance the stainless steel ball when in a throttle position with water flowing through it.

The valve shall be of the unique Akron swing-out design to allow the valve body to be removed for servicing without disassembling the plumbing.

The valve control shall be located at the pump operator panel and shall visually indicate the position of the valve at all times.

The discharge shall extend out beyond the pump panel with a 30 degree downward angle with chrome plated 2-1/2" NST threads to help prevent kinking of the discharge hose. The 30 degree chrome droop shall be an integral part of the discharge valve and shall be equipped with a chrome plated rocker lug cap with a retainer chain.

All fabricated piping shall be a minimum of Schedule 10 stainless steel for superior corrosion resistance and decreased friction loss.

Location: right side discharge 2, right side discharge 3.

DISCHARGE RIGHT PANEL 3 AKRON DROOP

One (1) 3" discharge outlet with a manually operated Akron valve shall be provided at the right side pump panel.

The discharge shall be equipped with a device that shall not allow the valve to open or close in less than three (3) seconds.

The valve shall be an Akron 8800HD series with a 316 stainless steel ball and dual polymer seats for ease of operation and increased abrasion resistance. The valve shall have a self-locking ball feature using an automatic friction lock design to balance the stainless steel ball when in a throttle position with water flowing through it.

The valve shall be of the unique Akron swing-out design to allow the valve body to be removed for servicing without disassembling the plumbing.

The valve control shall be located at the pump operator`s panel and shall visually indicate the position of the valve at all times.

The discharge shall extend out beyond the pump panel with a 30 degree downward angle with chrome plated 3" NST threads to help prevent kinking of the discharge hose. The 30 degree chrome droop shall be an integral part of the discharge valve and shall be equipped with a chrome plated rockerlug cap with a retainer chain.

All fabricated piping shall be a minimum of Schedule 10 stainless steel for superior corrosion resistance and decreased friction loss.

Location: right side discharge 1.

DISCHARGE OPTIONS

IC PUSH/PULL CONTROL

The apparatus pump panel shall be equipped with Innovative Controls Side Mount Valve Controls. The ergonomically designed ¼ turn push-pull T-handle shall be chrome-plated zinc with recessed labels for color-coding and verbiage. An anodized aluminum control rod and housing shall, together with a stainless spring steel locking mechanism, eliminate valve drift. Teflon impregnated bronze bushings in both ends of the rod housing shall minimize rod deflection, never need lubrication, and ensure consistent long-term operation. The control assembly shall include a decorative chrome-plated zinc panel-mounting bezel with areas for color-coding and/or FOAM and CAFS identification labels.

BLEEDER DRAIN VALVE [QTY: 11]

The bleeder/drain valves shall be Innovative Controls ¾" ball brass drain valves with chrome-plated lift lever handles and ergonomic grips. Each lift handle grip shall feature built-in color-

coding labels and a verbiage tag identifying each valve, also supplied by Innovative Controls. The color labels shall also include valve open and close verbiage.

DISCHARGE/INTAKE BEZEL

Innovative Controls intake and/or discharge swing handle bezels shall be installed to the apparatus with mounting bolts. These bezel assemblies will be used to identify intake and/or discharge ports with color and verbiage. These bezel are designed and manufactured to withstand the specified apparatus service environment and shall be backed by a warranty equal to that of the exterior paint and finish. The specified assemblies feature a chrome-plated panel-mount bezel with durable UV resistant polycarbonate inserts. These UV resistant polycarbonate graphic inserts shall be sub-surface screen printed to eliminate the possibility of wear and protect the inks from fading. All insert labels shall be backed with 3M permanent adhesive (200MP), which meets UL969 and NFPA standards.

PRESSURE GOVERNORS

FRC PUMPBOSS PRESSURE GOVERNOR

Fire Research PumpBoss model PBA400 series pressure governor and monitoring display kit shall be installed. The standard kit shall include a control module, pump discharge pressure sensor, and cables. The control module case shall be waterproof and have dimensions not to exceed 6-3/4" high by 4-5/8" wide by 1-3/4" deep. Inputs for engine information shall be from a J1939 databus or from independent sensors and pump discharge pressure input shall be from a pressure sensor.

The following continuous displays shall be provided:

* CHECK ENGINE and STOP ENGINE warning LEDs.
* Engine RPM; shown with four daylight bright LED digits more than 1/2" high.
* Engine OIL PRESSURE; shown on an LED bar graph display in 10 psi increments.
* Engine TEMPERATURE; shown on an LED bar graph display in 10 degree increments.
* BATTERY VOLTAGE; shown on an LED bar graph display in 0.5 volt increments.
* PSI / RPM setting; shown on a dot matrix message display.
* PSI and RPM mode LEDs.
* THROTTLE READY LED.

A dot-matrix message display shall show diagnostic and warning messages as they occur. It shall show monitored apparatus information, stored data, and program options when selected by the operator.

The program shall store the accumulated operating hours for the pump and engine, previous incident hours, and current incident hours in a non-volatile memory. Stored elapsed hours shall be displayed at the push of a button. It shall monitor inputs and support audible and visual warning alarms for the following conditions:

* Low Oil Pressure
* High Engine Coolant Temperature
* High Transmission Temperature
* Low Battery Voltage (Engine Off)
* Low Battery Voltage (Engine Running)
* High Battery Voltage
* High Engine RPM

The governor shall operate in two control modes; pressure and RPM. No discharge pressure or engine RPM variation shall occur when switching between modes. A control knob that uses optical technology shall adjust pressure or RPM settings. It shall be 2" in diameter with no mechanical stops, a serrated grip, and have a red idle push button in the center.

A throttle ready LED shall light when the pump engaged interlock signal is recognized. The governor shall be in pressure mode and set the engine RPM to idle. In pressure mode the governor shall automatically regulate the discharge pressure at the level set by the operator. In RPM mode the governor shall maintain the engine RPM at the level set by the operator except in the event of a discharge pressure increase. The governor shall limit a discharge pressure increase in RPM mode to a maximum of 30 PSI. Other safety features shall include recognition of no water conditions with an automatic programmed response and a push button to return the engine to idle.

The pressure governor and monitoring display shall be programmed to interface with a specific engine.

The display module shall be mounted at the pump operator`s panel.

GAUGES

2.5 [QTY: 11]

The valve discharge gauges shall be 2 ½"(63mm) diameter Innovative Controls pressure gauges. Each gauge shall have a rugged corrosion free stainless steel case and clear scratch resistant molded crystals with captive O-ring seals to ensure distortion free viewing and seal the gauge. The gauges shall be filled with a synthetic mixture to dampen shock and vibration, lubricate the internal mechanisms, prevent lens condensation and ensure proper operation from –40F to +160F. Each gauge shall exceed ANSI B40.1 Grade A requirements with an accuracy of +/- 1.5% full scale and include a size appropriate phosphorous bronze bourdon tube with a reinforced lap joint and large tube base to increase the tube life and gauge accuracy.

A polished chrome-plated stainless steel bezel shall be provided to prevent corrosion and protect the lens and gauge case. The gauges shall be installed into decorative chrome-plated mounting bezels that incorporate valve-identifying verbiage and/or color labels. The gauges shall display a range from 0 to 400 psi with black graphics on a white background.

4" MASTER PRESSURE GAUGES W/BEZEL

The master intake and master discharge gauges shall be 4"(101mm) diameter IC pressure gauges. Each gauge shall have a rugged corrosion free stainless steel case and clear scratch resistant molded crystals with captive O-ring seals to ensure distortion free viewing and seal the gauge. The gauges shall be filled with a synthetic mixture to dampen shock and vibration, lubricate the internal mechanisms, prevent lens condensation and ensure proper operation from –40F to +160F. Each gauge shall meet ANSI B40.1 Grade 1A requirements with an accuracy of +/- 1% full scale and include a size appropriate phosphorous bronze bourdon tube with a reinforced lap joint and large tube base to increase the tube life and gauge accuracy.

The two master gauges shall be installed into decorative chrome-plated zinc mounting bezel that also incorporates a test port manifold and a graphic overlay that identifies the master intake and discharge gauges, the vacuum test port, and the pressure test port. The test port manifold is solid cast brass with chrome plated plugs. The master gauges shall be installed on the pump panel no more than 6 inches apart. The gauge on the left shall be the master pump intake gauge and display a range from 30" vac to 400 psi with black graphics on a white background. The gauge on the right shall be the master pump discharge gauge and display a range from 0 to 400 psi with black graphics on a white background.

FRC WATER TANK LEVEL GAUGE

Fire Research TankVision Pro model WLA300-A00 tank indicator kit shall be installed. The kit shall include an electronic indicator module, a pressure sensor, and a 10' sensor cable. The indicator shall show the volume of water in the tank on nine (9) easy to see super bright RGB LEDs. A wide view lens over the LEDs shall provide for a viewing angle of 180 degrees. The indicator case shall be waterproof, manufactured of Polycarbonate/Nylon material, and have a distinctive blue label.

The program features shall be accessed from the front of the indicator module. The program shall support self-diagnostics capabilities, self-calibration, six (6) programmable colored light patterns to display tank volume, adjustable brightness control levels and a datalink to connect remote indicators. Low water warnings shall include flashing LEDs at 1/4 tank, down chasing LEDs when the tank is almost empty, and an output for an audio alarm.

The indicator shall receive an input signal from an electronic pressure sensor. The sensor shall be mounted from the outside of the water tank near the bottom. No probe shall be placed on the interior of the tank. Wiring shall be weather resistant and have automotive type plug-in connectors.

ELECTRICAL SYSTEMS

MULTIPLEX ELECTRICAL SYSTEM

Electrical System

The apparatus shall incorporate a Weldon V-MUX multiplex 12 volt electrical system. The system shall have the capability of delivering multiple signals via a CAN bus. The electrical system installed by the apparatus manufacturer shall conform to current SAE standards, the latest FMVSS standards, and the requirements of the applicable NFPA 1901standards.

The electrical system shall be pre-wired for optional computer modem accessibility to allow service personnel to easily plug in a modem to allow remote diagnostics.

The electrical circuits shall be provided with low voltage over-current protective devices. Such devices shall be accessible and located in required terminal connection locations or weather-resistant enclosures. The over-current protection shall be suitable for electrical equipment and shall be automatic reset type and meet SAE standards. All electrical equipment, switches, relays, terminals, and connectors shall have a direct current rating of 125 percent of maximum current for which the circuit is protected. The system shall have electro-magnetic interference suppression provided as required in applicable SAE standards.

Any electrical junction or terminal boxes shall be weather-resistant and located away from water spray conditions.

Multiplex System

For superior system integrity, the networked multiplex system shall meet the following minimum component requirements:

• The network system must be Peer to Peer technology based on RS485 protocol. No one module shall hold the programming for other modules. One or two modules on a network referred to as Peer to Peer, while the rest of the network consists of a one master and several slaves is not considered Peer to Peer for this application.
• Modules shall be IP67 rated to handle the extreme operating environment found in the fire service industry.
• All modules shall be solid state circuitry utilizing MOS-FET technology and utilize Deutsch series input/output connectors.
• Each module that controls a device shall hold its own configuration program.
• Each module should be able to function as a standalone module. No "add- on" module will be acceptable to achieve this form of operation.
• Load shedding power management (8 levels).
• Switch input capability for chassis functions.
• Responsible for lighting device activation.
• Self-contained diagnostic indicators.
• Wire harness needed to interface electrical devices with multiplex modules.
• The grounds from each device should return to main ground trunk in each sub harness by the use of ultrasonic splices.

Wiring

All harnessing, wiring and connectors shall be manufactured to the following standards/guidelines. No exceptions.

• NFPA 1901-Standard for Automotive Fire Apparatus
• SAE J1127 and J1127
• IPC/WHMA-A-620 – Requirements and Acceptance for Cable and Wire Harness Assemblies. (Class 3 – High Performance Electronic Products)

All wiring shall be copper or copper alloys of a gauge rated to carry 125 of the maximum current for which the circuit is protected. Insulated wire and cable 8ga and smaller shall be SXL, GXL, or TXL per SAE J1128. Conductors 6ga and larger shall be SXL or SGT per SAE J1127.

All wiring shall be colored coded and imprinted with the circuit's function. Minimum height of imprinted characters shall not be less than .082" plus or minus .01". The imprinted characters shall repeat at a distance not greater than 3".

A coil of wire shall be provided behind electrical appliances to allow them to be pulled away from mounting area for inspection and service work.

Wiring Protection

The overall covering of the conductors shall be loom or braid.

Braid style wiring covers shall be constructed using a woven PVC-coated nylon multifilament braiding yarn. The yarn shall have a diameter of no less than .04" and a tensile strength of 22lbs. The yarn shall have a service temperature rating of -65 F to 194 F. The braid shall consist of 24 strands of yarn with 21 black and 3 yellow. The yellow shall be oriented the same and be next to each other.

Wiring loom shall be flame retardant black nylon. The loom shall have a service temperature of -40 F to 300 F and be secured to the wire bundle with adhesive-backed vinyl tape.

Wiring Connectors

All connectors shall be Deutsch series unless a different series of connector is needed to mate to a supplier's component. The connectors and terminals shall be assembled per the connector/terminal manufacturer's specification. Crimble/Solderless terminals shall be acceptable. Heat shrink style shall be utilized unless used within the confines of the cab.

NFPA Required Testing of Electrical System

The apparatus shall be electrical tested upon completion of the vehicle and prior to delivery. The electrical testing, certifications, and test results shall be submitted with delivery documentation per requirements of NFPA #1901. The following minimum testing shall be completed by the apparatus manufacturer:

1. Reserve capacity test:

The engine shall be started and kept running until the engine and engine compartment temperatures are stabilized at normal operating temperatures and the battery system is fully charged. The engine shall be shut off and the minimum continuous electrical load shall be activated for ten (10) minutes. All electrical loads shall be turned off prior to attempting to restart the engine. The battery system shall then be capable of restarting the engine. Failure to restart the engine shall be considered a test fail.

2. Alternator performance test at idle:

The minimum continuous electrical load shall be activated with the engine running at idle speed. The engine temperature shall be stabilized at normal operating temperature. The battery system shall be tested to detect the presence of battery discharge current. The detection of battery discharge current shall be considered a test failure.

3. Alternator performance test at full load:

The total continuous electrical load shall be activated with the engine running up to the engine manufacturer`s governed speed. The test duration shall be a minimum of two (2) hours. Activation of the load management system shall be permitted during this test. However, an alarm sounded by excessive battery discharge, as detected by the system required in NFPA #1901 Standard, or a system voltage of less than 11.7 volts dc for a 12 volt nominal system, for more than 120 seconds, shall be considered a test failure.

4. Low voltage alarm test:

Following the completion of the above tests, the engine shall be shut off. The total continuous electrical load shall be activated and shall continue to be applied until the excessive battery discharge alarm activates. The battery voltage shall be measured at the battery terminals. With the load still applied, a reading of less than 11.7 volts dc for a 12 volt nominal system shall be considered a test failure. The battery system shall then be able to restart the engine. Failure to restart the engine shall be considered a test failure.

NFPA Required Documentation

The following documentation shall be provided on delivery of the apparatus:

A. Documentation of the electrical system performance tests required above.

B. A written load analysis, including:

a. The nameplate rating of the alternator
b. The alternator rating under the conditions
c. Each specified component load
d. Individual intermittent loads

VEHICLE DATA RECORDER

A vehicle data recorder system shall be provided to comply with the 2009 and 2016 editions of NFPA 1901. The following data shall be monitored:

- Vehicle speed MPH
- Acceleration (from speedometer) MPH/Sec.
- Deceleration (from speedometer) MPH/Sec.
- Engine speed RPM
- Engine throttle position % of full throttle
- ABS Event On/Off
- Seat occupied status Occupied Yes/No by position
- Seat belt status Buckled Yes/No by position
- Master Optical Warning Device Switch On/Off
- Time: 24 hour time
- Date: Year/Month/Day

Occupant Detection System

There shall be a visual and audible warning system installed in the cab that indicates the occupant buckle status of all cab seating positions that are designed to be occupied during vehicle movement.

The audible warning shall activate when the vehicle's park brake is released and a seat position is not in a valid state. A valid state is defined as a seat that is unoccupied and the seat belt is unbuckled, or one that has the seat belt buckled after the seat has been occupied.

The visual warning shall consist of a graphical representation of each cab seat in the multiplex display screen that will continuously indicate the validity of each seat position.

The system shall include a seat sensor and safety belt latch switch for each cab seating position, audible alarm and braided wiring harness.

MULTIPLEX DISPLAY

The V-MUX multiplex electrical system shall include a Vista IV color display.

The display shall have the following features:

- Aspect ratio of 16:9 (Wide Screen)
- Diagonal measurement of no less than 7"
- Master warning switch
- Engine high idle switch
- Five (5) tactile switches to access secondary menus
- Eight (8) multi-function programmable tactile switches
- Specific door ajar indication

- Real time clock
- Provides access to the multiplex system diagnostics
- Video capability for optional back-up camera(s) and GPS display

The display shall be located driver's side engine cover.

ELECTRICAL CONNECTION PROTECTION

The vehicle electrical system shall be made more robust by the application of a corrosion inhibiting spray coating on all exposed electrical connections on the chassis and body. If equipped with an aerial device, the exposed connections on the aerial components shall also be protected.

The coating shall use nanotechnology to penetrate at the molecular level into uneven surfaces to create a protective water repellant film. The coating shall protect electrical connections against the environmental conditions apparatus are commonly exposed to.

SMART TRUCK TECHNOLOGY

User Interface

The apparatus shall be equipped with a smart truck technology system designed specifically for first responder apparatus. The system shall interconnect major apparatus CAN networks including but not limited to the chassis J1939/OBD2 data, vehicle multiplex system, water pump pressure governor, electric valves and electric actuated deck gun. The system shall securely report real-time vehicle information from these systems via cellular data to a globally supported cloud computing service for storage and real time access via web dashboards. The dashboards shall be accessible by the department's computers, tablets and smartphones.

The smart truck technology installed on the apparatus shall provide real-time notification via text or e-mail when a check engine light is displayed. The notification shall include the fault code and brief explanation for the code to reduce down-time.

The system shall feature a truck down feature on the web-based user interface to allow instant notification of needed apparatus service to both the authorized dealership and OEM via text or e-mail.

The system shall provide remote diagnostics of vehicle subsystems such as VMUX, pressure governors, electric monitors and electric valves.

By use of the web based user interface, the system shall allow for over the air programming updates to various subsystems should the need arise.

The web-based user interface shall also provide the following:

- Fuel and DEF levels

- GPS tracking
- Data logging for apparatus multiplex system
- Easy access to the NFPA VDR data

The smart truck technology shall also feature seamless integration to the HAAS ALERT Safety Cloud providing Responder to Vehicle (R2V) alerts to motorists using navigation apps such as WAZE.

The system shall be designed with an open architecture to incorporate future growth with new technology partners designed to enhance fireground operations

Hardware

Vehicle Gateway

The vehicle gateway module shall be rugged in construction using a durable cast aluminum enclosure designed for emergency vehicle applications. The module shall have sealed Deutsch connectors providing four (4) CAN network ports, one (1) RS-485 port, one (1) Ethernet RJ45 port, embedded cellular modem, Bluetooth and GPS capability. The IoT Core Vehicle Gateway shall be capable of 2 way vehicle telemetry, supporting both remote diagnostics and remote over-the-air software updates.

Antenna

A low profile cellular antenna shall be installed on the cab roof.

Data Plan

A 5 year data plan shall be provided with the initial vehicle purchase. At the end of the 5 year period the department shall be given the option to extend service.

LIGHT BARS

FRONT LIGHT BAR COLOR(S)

The front light bar shall be provided with the following color LED modules: Red/White with clear lenses

If applicable, includes side facing light bars when colors are the same.

LIGHT BAR MOUNT

One (1) pair of Whelen 1.5" tall (model MKEZ7) mounts shall be provided on each front mini light bars.

LIGHT BARS

A pair of Whelen Mini Freedom IV Series 21.5" LED light bars shall be provided.

Each light bar shall contain two (2) corner LED modules forward facing, two (2) forward facing Long LED modules and one (1) outward facing Short LED module. No rear facing LEDs.

The white LEDs (if equipped) shall be switched off in blocking right of way mode.

The light bars shall be installed in the following location: front cab corners at 20 degree angle.

WARNING LIGHT PACKAGES

LOWER LEVEL WARNING LIGHT PACKAGE

Ten (10) Whelen C-Series model C6L Super LED light heads shall be provided. Lights shall be Red with clear lenses.

The rectangular lights shall include chrome flanges where applicable. The lights shall be wired with weatherproof connectors and shall be mounted as close to the corner points of the apparatus as is practical as follows:

• Two (2) lights on the front of the apparatus facing forward.
• Two (2) lights on the rear of the apparatus facing rearward.
• Two (2) lights each side of the apparatus, one (1) each side at the forward most point (as practical), and one (1) each side at the rearward most point (as practical).
• One (1) light each side of the apparatus centrally located to provide mid ship warning light.

The side facing lights shall be located at forward most position, on side of cab down low just ahead of rear door, and on rear fixed outrigger cover.

All warning devices shall be surface mounted in compliance with NFPA standards.

WARNING LIGHTS

HAZARD (DOOR AJAR) LIGHT

There shall be a 2" red LED hazard light installed as specified.

The light shall be located center overhead.

OPTICOM EMITTER

A 3M model 792H Opticom emitter light head shall be installed driver's side brow.

The emitter shall be controlled by a switch in cab accessible to driver and be wired to turn off when the park brake is applied.

UPPER REAR WARNING LIGHTS

Two (2) Whelen model L31H Super LED beacons with Red LED with Clear lens domes shall be supplied.

The lights shall be located each side at upper rear of body on aerial style brackets, top of light even with top of body to meet Zone C upper requirements.

WARNING LIGHTS

Two (2) Whelen C-Series model C6L Super LED light heads shall be provided. The lights shall be Red with red lenses. The rectangular lights shall include chrome flanges where applicable.

Location: (1) each side in front quad inboard of NFPA warning light.

DIRECTIONAL LIGHT BARS

DIRECTIONAL LIGHT BAR CONTROL LOCATION

The directional light bar control head shall be located in the center overhead console offset to driver side.

DIRECTIONAL TRAFFIC WARNING LIGHT

One (1) Whelen model TAM83 LED Traffic Advisor™ with clear lenses shall be provided. The light bar shall include Eight (8) TIR3™ Super-LED® lamps.

The directional bar shall include a TACTLD1 control head. The control head shall include a remote flash control and end lamp enable/disable feature.

The light shall be installed at rear of body to direct traffic around the apparatus.

Dimensions: 2.875" high x 2.25" wide x 30.36" long.

SIRENS

ELECTRONIC SIREN

A Whelen 295SLSA1 electronic siren shall be installed in the cab. The siren amplifier and control panel module shall include a rotary selector for six (6) functions, on/off switch, push button switch for manual siren or air horn tones, and noise canceling microphone.

ELECTRONIC SIREN CONTROL LOCATION

The electronic siren control shall be located in the center overhead.

MECHANICAL SIREN

A chrome plated and pedestal mounted Federal Q2B-P coaster siren shall be installed on top of the front bumper extension. An electric siren brake switch shall be located in the cab accessible to the driver.

The siren shall be located driver side front bumper.

SPEAKERS

SIREN SPEAKER

One (1) Whelen model SP123BMC, 100 watt speaker with chrome grill shall be recessed in the front bumper.

The speaker shall produce a minimum sound output of 120 dB at 10 feet to meet current NFPA 1901 requirements.

The speaker shall be located driver side front bumper, officer side front bumper.

DOT LIGHTING

LICENSE PLATE LIGHT

One (1) Truck-Lite model 15905 white LED license plate light mounted in a Truck-Lite model 15732 chrome plated plastic license plate housing shall be mounted at the rear of the body.

TAIL LIGHTS

Three (3) Whelen model C6 series LED (Light Emitting Diode) lights shall be installed in a chrome ABS 4 housing in a vertical position each side at the rear and wired with weatherproof connectors.

Light functions shall be as follows:

- LED red running light with red brake light in upper position.
- LED populated amber arrow pattern turn signal in middle position.
- LED clear back-up light in lower position.

A one-piece chrome ABS trim housing shall be mounted around the three (3) individual lights in a vertical position. The lower space will be used by the 6" x 4" lower NFPA warning light.

LED MARKER LIGHTS

LED clearance/marker lights shall be installed on the cab. The body marker lights shall be TecNiq 3/4" grommet mounted LED.

Upper Cab:
• Five (5) amber LED clearance lights on the cab roof.

Lower Cab:
• One (1) amber LED side turn/marker each side of cab ahead of the front door hinge.

Upper Body:
• One (1) red LED clearance light each side, rear of body to the side.

Lower Body:
• Three (3) red LED clearance lights centered at rear, recessed in the rubrail.
• One (1) red LED clearance light each side at the trailing edge of the apparatus body, recessed in the rubrail.
• One (1) amber LED clearance light each side front of body just in front of rear wheels, recessed in the rubrail.
• Two (2) amber LED (one (1) clearance; one (1) auxiliary turn) lights each side front of body, recessed in the rubrail.

LIGHTS - COMPARTMENT, STEP & GROUND

COMPARTMENT LIGHT PACKAGE

Two (2) Amdor Luma-Bar blue LED compartment light strips shall be mounted in each body compartment greater than 4 cu. ft. Transverse compartments shall have four (4) lights, located two (2) each side.

Compartment lights shall be wired to a master on/off rocker switch on the cab switch panel.

The wiring connection for the compartment lights shall be made with a weather-resistant plug in style connector. A single water and corrosion-resistant switch with a polycarbonate actuator and sealed contacts shall control each compartment light. The switch shall allow the light to illuminate if the compartment door is open.

GROUND LIGHTS

The apparatus shall be equipped with a sufficient quantity of lights to properly illuminate the ground areas around the apparatus in accordance with current NFPA requirements. The lights shall be TecNiq model T440 4" circular LED (Light Emitting Diode) with clear lenses mounted in a resilient shock absorbent mount for improved bulb life. The wiring connections shall be made with a weather resistant plug in style connector.

Ground area lights shall be switched from the cab dash with the work light switch.

One (1) ground light shall be supplied under each side of the front bumper extension if equipped.

Lights in areas under the driver and crew area exits shall be activated automatically when the exit doors are opened.

STEP LIGHTS

The apparatus shall be equipped with a sufficient quantity of lights to properly illuminate the steps around the apparatus in accordance with current NFPA requirements. The lights shall be TecNiq model T440 4" circular LED (Light Emitting Diode) with clear lenses mounted in a resilient shock absorbent mount for improved bulb life (a smaller light may be used if space is limited). The wiring connections shall be made with a weather resistant plug in style connector.

The step lights shall be switched from the cab dash with the work light switch.

MEDICAL CABINET LIGHT (BLUE) [QTY: 3]

One (1) Amdor Luma-Bar blue LED compartment light strip shall be mounted in the medical cabinet.

The light shall be wired to the compartment light rocker switch in the cab.

LADDER TUNNEL LIGHT [QTY: 2]

An EON LED light shall be provided to illuminate the ladder tunnel at the opening. The light shall be wired through the door ajar circuit on the ladder tunnel door.

LIGHTS - DECK AND SCENE

HOSE BED LIGHT

An Optronics round LED light model TLL44 shall be installed at the front area of the hose bed to provide hose bed lighting per current NFPA 1901. The light shall provide 720 lm effective output. The light shall have a black powder coated, die cast aluminum housing and stainless steel hardware with a weatherproof rating of IP69K.

The hose bed light shall be switched with the work light switch in the cab.

CROSSLAY LIGHT

An Optronics round LED light model TLL44 shall be installed at the rear area of the crosslay to provide crosslay lighting per current NFPA 1901. The light shall provide 720 lm effective

output. The light shall have a black powder coated, die cast aluminum housing and stainless steel hardware with a weatherproof rating of IP69K.

The crosslay light shall be switched with the work light switch in the cab.

SCENE LIGHTS

Two (2) Federal Signal FireRay model FR6LEDSCENE LED scene lights shall be provided.

Lights shall be located (1) each side of body rear facing up high and switched in the cab (side facing lights switched separately).

LIGHTS - NON-WARNING

ENGINE COMPARTMENT LIGHT

There shall be lighting provided in compliance with NFPA to illuminate the engine compartment area. The light wiring circuit shall activate when the cab is tilted and master power is switched on.

PUMP PANEL LIGHT PACKAGE

Six (6) LED pump panel lights shall be provided. The lights shall be located three (3) each side under a light shield (as applicable with intermedialte steps) directly above the left and right side pump panels. The lights shall be Tecniq EON with polished stainless steel housings. The light shields shall be formed from 14 gauge brushed finish stainless steel. The work light switch in the cab shall activate the lights when the park brake is set.

PUMP COMPARTMENT LIGHT

An LED light shall be provided in the pump compartment area for NFPA compliance. The light shall be an Optronics ILL22 Series that has a polycarbonate lense and sealed / waterproof housing. The light shall be wired through a switch inside the pump compartment access door / panel.

LED BACKING LIGHTS

A pair of TecNiq model E60-WS20-1 LED flush mount docking/backing lights shall be provided. Each light shall provide additional lighting for backing the vehicle and shall operate when the vehicle is placed in reverse.

The lights shall be located rear wheel well offset to rear.

Specifications:

Dimensions: 6.6" x 3.125" x 2.7"

LEDs: 1

Lumens: 2000

Voltage: 9 - 30 VDC

Current: 1.25A - 1.75A

Wire: 12"

Mounting: Surface mounted with two screws

LED Colors: White

CONTROLS / SWITCHES

DOOR AJAR ALARM

An audible alarm shall be provided through the multiplex display(s) in the cab wired into the door ajar or indicator.

FOOT SWITCH

A heavy duty metal floor mounted foot switch shall be installed to operate the air horns. It shall be located officer's side.

FOOT SWITCH

A heavy duty metal floor mounted foot switch shall be installed to operate the Q2B siren. It shall be located driver's side, officer's side.

ADDITIONAL SWITCH

A 12 volt switch shall be provided.

The switch shall be located driver rear of body for rear work lights.

CAMERAS / INTERCOM

TWO-WAY INTERCOM

A Fire Research ACT two-way intercom system shall be installed to provide communications between the turntable control station and the aerial tip. The intercom system shall include two (2)

speakers and two (2) control modules; one (1) with a push-to-talk button at the turntable control station and one (1) hands free at the aerial tip.

The control modules shall have push-button volume control and a LED volume display. The hands free module shall constantly transmit to the other module unless the push-to-talk button is pressed.

The intercom shall have active noise cancellation and be designed for exterior use.

CAMERA BACK-UP

There shall be a Safety Vision camera model number SV-625B-KIT provided. The camera shall be mounted up high at the rear of the vehicle to provide a wide angle rear view with audio. The camera shall include a cable with metallic waterproof threaded o-ring seal connectors to ensure positive connection between video cable and camera to prevent unplugging due to vibration resulting in video loss to vehicle operator. The camera shall be interlocked with the chassis transmission. When the apparatus is placed in reverse the camera shall automatically be activated and when the transmission is placed in any other gear the screen shall return to the previously displayed screen.

INTERCOM SYSTEM

A David Clark model 3800 intercom system shall be provided with four (4) headset jacks in the cab and one (1) headset jack at the pump panel.

The system shall include:

One (1) U3800 master station.
One (1) U3805 Radio cord junction module
One (1) U3811 Radio interface module/headset station.
One (1) U3815 Radio interface/headset station.
One (1) C3408 Jumper cord. 8ft.
One (1) C38-12 Jumper cord. 12ft.
One (1) C3820 Power cord. 20ft.
Two (2) C3821-05 Radio interface cable 3800 modules to U3805
One (1) 18352G-17 MS connector - 6 socket for radio cords
Four (4) 43200G-01 Headset hangers
One (1) C3019B Adapter with 15ft. coil cord, Radio PTT swtich and volume control
One (1) 183252G-16 Connector kit - to panel mount C3019 adapter
One (1) 13238P-01 Protector cap - for 18352G-16 (includes nylon lanyard)
Fifty (50) feet 09271P-34 Electrical cord - for wiring connector kit to U3805

Headsets shall be ordered separately and are not included as part of the intercom package.

MISC ELECTRICAL

BACK-UP ALARM

An electronic back-up alarm shall be supplied. The 97 dB alarm shall be wired into the chassis back-up lights to signal when the vehicle is in reverse gear.

12 VOLT DC POWER DISTRIBUTION MODULE

A Blue Sea model 5032 12 place, split bus fuse block with ground, 12 volt DC power distribution module shall be provided. The module shall provide two isolated groups of six circuits, and shall be wired through switched hot and battery hot, and include a battery ground.

Location: behind officer's seat.

GENERATOR

HYDRAULIC GENERATOR

A Harrison model MCR 10KW hydraulic generator system shall be supplied and installed dunnage pan offset to driver side. The generator shall come with an axial piston hydraulic pump, reservoir, cooler, voltage regulator and a gauge panel.

The gauge panel shall display voltage, hour meter, frequency, and amperage.

The hydraulic motor-generator system shall be modular design with dimensions of approximately 33" long x 14.2" wide x 18.1" high and shall be permanently mounted on the apparatus.

The hydraulic pump shall be driven by a chassis transmission mounted power take off (PTO).

A generator control / PTO engage switch shall be mounted on the cab instrument panel to engage the PTO and start the generator.

Ratings and Capacity

Rating: 10,000 watts continuous
Volts: 120/240 volts
Phase: Single, 4-wire
Frequency: 60 Hz
Amps: 42 amps at 240 volts, 84 amps at 120 volts
Engine Speed at Engagement: Idle
Pump Speed Operating Range: 980 to 3300 RPM
Weight: Approximately 245 lbs.

Testing

The generator shall be tested in accordance with current NFPA 1901 standards.

Notes:
*All ratings and capacities shall be derived utilizing current NFPA 1901 test parameters.
*Extreme ambient temperatures could effect generator performance.

GENERATOR TEST

3RD PARTY GENERATOR TESTING

The generator shall be tested at the manufacturer`s facility by an independent, third-party testing service. The conditions and testing of the generator shall be as outlined in current NFPA 1901.

The test shall include operating the generator for two hours at 100% of the rated load. Power source voltage, amps, frequency shall be monitored. The prime mover`s oil pressure, water temperature, transmission temperature (if applicable) and power source hydraulic fluid temperature (if applicable) shall be monitored during testing.

The results of the test shall be recorded and provided with delivery documentation.

BREAKER BOXES

CIRCUIT BREAKER PANEL

A twelve (12) place breaker box with up to twelve (12) appropriately sized ground-fault interrupter circuit breakers shall be supplied. The breaker box will include a master breaker sized according to the generator output. The breaker box will be located in the specified compartment, not to exceed 12` run of wire.

Note: If generator is 5.5KW or less, the main breaker will occupy 2 places, leaving 10 available.

Dimensions: 17.92" high x 14.25" wide x 3.75" deep.

Location: L1 back wall above offset forward area.

LIGHTS - QUARTZ

120V LED FLOOD LIGHT [QTY: 2]

Fire Research Spectra model SPA802-K20-02 contour roof mount light. The mounting brackets shall attach to the lamp head and attached to the roof radius. Wiring shall extend from a weatherproof strain relief at the rear of the lamp head.

The lamp head shall have sixty (60) ultra-bright white LEDs, 48 for flood lighting and 12 to provide a spot light beam pattern. It shall operate at 120 volts AC, draw 2 amps, and generate

20,000 lumens of light. The lamp head shall have a unique lens that directs flood lighting onto the work area and focuses the spot light beam into the distance. The lamp head shall be no more than 5-7/8" high by 14" wide by 3-1/2" deep and have a heat resistant handle. The lamp head and mounting arm shall be powder coated black. The LED scene light shall be for fire service use.

Location: driver and officer side front cab brow, driver and officer side over canopy area.

120V LED FLOOD LIGHT

Fire Research Spectra model SPA530-K20-SW-H side mount push-up telescopic light shall be installed. The light pole shall be anodized aluminum and have a knurled twist lock mechanism to secure the extension pole in position. The extension pole shall rotate 360 degrees. The outer pole shall be a grooved aluminum extrusion and qualify as an NFPA compliant hand rail. The pole mounting brackets shall have a 3-1/2" offset. Wiring shall extend from the pole bottom with a 4 ft. retractile cord.

The lamp head shall have sixty (60) ultra-bright white LEDs, 48 for flood lighting and 12 to provide a spot light beam pattern. It shall operate at 120 volts AC, draw 2 amps, and generate 20,000 lumens of light. The lamp head shall have a unique lens that directs flood lighting onto the work area and focuses the spot light beam into the distance. The lamp head shall be no more than 5-7/8" high by 14" wide by 3-1/2" deep and have a heat resistant handle. The lamp head and mounting arm shall be powder coated black. The LED scene light shall be for fire service use.

Fire Research Spectra-SW option raised pole hazard light switch for a 530 pole shall be installed. The magnetic switch shall be in a cylindrical housing clamped on the outer pole. A magnet shall be mounted in the extension pole. The switch contacts shall close when the pole is raised.

Location: officer side back of cab, driver side back of cab.

RECEPTACLES

RECEPTACLE

A 20 amp, 110 volt NEMA L5-20 twist lock receptacle with a weatherproof cover plate shall be installed as specified by the department.

Location: driver side rear wheel well offset forward, officer side rear wheel well offset forward.

ELECTRIC CORD REELS

ROLLERS, CORD REEL

Rollers, captive for cord reel mounted on reel.

Stainless steel cord reel rollers shall be installed and located on the reel.

The rollers shall facilitate smooth removal of the electric cord.

{May include a bracket (as required)}

ELECTRIC CORD REEL

Hannay electric rewind cord reel(s) (ECR 1616-17-18) shall be installed and located ceiling mount turntable access door area.

The reel(s) shall include 200`of yellow 10 gauge 3 conductor type SOWA cord. The cord shall be rated at 20 amps @ 110 volts. The end of the cord shall be terminated for the installation of a department required connector.

ROLLERS, CORD REEL

Rollers, stainless steel cord reel rollers shall be installed and located through a panel.

The rollers shall be located on turntable access door on right side of D-ring.

The rollers shall facilitate smooth removal of the electric cord.

CIRCLE D MOUNTING BOX

A Circle D model #213 cast aluminum mounting box shall be installed as specified for the Circle D junction box.

Mount located for box with reel in or on ceiling mount turntable access door area.

ELECTRICAL JUNCTION BOX

A Circle-D model PF51G four outlet electrical junction box shall be provided and shall have an integral pilot light to indicate electrical current.

The unit shall be equipped with three (3) 120 volt 20 amp NEMA L5-20R twist-lock receptacles and one (1) 120 volt 15 amp NEMA 5-15R straight blade receptacle, each with a hinged weatherproof cover.

Located on cord for reel in ceiling mount turntable access door area.

CORD REEL REWIND SWITCH

A heavy duty rubber covered electric reel rewind button shall be installed rear of body near cord reel compartment.

AERIAL MODEL

HP75 AERIAL LADDER

Performance

A 75` telescopic aerial ladder of the open-truss design shall be installed at the rear of the vehicle with the aerial ladder pointed forward when it is in the travel position. The aerial ladder shall meet or exceed the requirements of NFPA 1901 (2016 edition), Sections 19.2 through 19.6 and Sections 19.17 through 19.25.

The aerial ladder shall consist of three (3) telescopic ladder sections capable of operating from minus (-) 8 degrees to plus (+) 76 degrees elevation at any ladder extension to give a full range of movement. The aerial ladder shall be designed to provide continuous egress for firefighters and civilians from any angle of elevation to the ground as defined in the current edition of NFPA 1901.

The aerial ladder shall have a rated vertical height of 75` measured in a vertical plane from the outermost rung of the outermost fly section to the ground with the ladder at maximum elevation and extension as defined in the current edition of NFPA 1901.

The aerial ladder shall have a rated horizontal reach of 68` measured in a horizontal plane from the centerline of the turntable rotation to the outermost rung of the outermost fly section with the aerial ladder extended to its maximum horizontal reach as defined in the current edition of NFPA 1901.

The aerial ladder shall utilize a single pair of stabilizers - one (1) on the left and one (1) on the right opposite each other - with a maximum horizontal stabilizer spread of 16` across the centerlines of the footpads. Aerial ladders which require two (2) sets of extending stabilizers or that have a maximum stabilizer spread greater than 16` are not acceptable because of the need to utilize the aerial ladder in confined areas. Aerial ladders that require a set of drop down jacks behind the cab are not acceptable. This type of configuration decreases compartment space and increases the overall vehicle weight, causing increased bending load on the chassis. In addition, it raises the water tank, which affects the overall center of gravity of the truck. **NO EXCEPTIONS.**

The aerial ladder shall have a rated tip capacity of 550 lbs. when the ladder is unsupported at full extension and 0 degrees elevation as defined by the current edition of NFPA 1901. This capacity may take the form of firefighters wearing personal protective gear, people being rescued, equipment, or any combination of loads not to exceed the rated tip capacity. The rated tip capacity shall include to an allowance of 50 lbs. for equipment mounted at the tip of the ladder. Ladders which have a rated NFPA tip capacity of less than 550 lbs. are not acceptable because of the need to utilize the aerial ladder for rescue operations in which two (2) personnel may be on the tip at the same time. **NO EXCEPTIONS.**

The ladder shall be able to provide full operating capacities in up to 35 mph wind conditions.

Aerial Ladder Construction

To ensure a high strength-to-weight ratio, high heat resistance, and an inherent corrosion resistance, the aerial ladder shall be constructed entirely of extruded high-strength aluminum alloy. **NO EXCEPTIONS**.

All side rails, rungs, handrails, uprights and K-braces shall be made of structural 6061-T6 aluminum alloy extrusions. All material shall be tested and certified by the material supplier. All ladder sections shall be semi-automatically welded by inert gas shielded-arc welding methods using 5356 aluminum alloy welding wire. Structural rivets or bolts shall not be utilized in the ladder weldment sections.

Due to the unpredictable nature of fireground operations, a minimum safety factor of 2.5 to 1 is desired. This structural safety factor shall apply to all structural aerial components including turntable and torque box stabilizer components. Definition of the structural safety factor shall be as outlined in NFPA 1901 A.19.20.1: **NO EXCEPTIONS**

DL = Dead load stress. Stress produced by the weight of the aerial device and all permanently attached components.
RL = Rated capacity stress. Stress produced by the rated capacity load of the ladder.
WL= Water load stress. Stress produced by nozzle reaction force and the weight of water in the water delivery system.
FY = Material yield strength. The stress at which material exhibits permanent deformation.

2.5 x DL + 2.5 x RL + WL equal to/less than FY

The minimum NFPA specification is exceeded in this paragraph by requiring safety margin above 2 to 1 while flowing water.

The stability factor or tip over safety margin shall be a minimum of 1.5 to 1 as defined by NFPA 1901 19.21.

An independent, third-party engineering firm shall verify both the structural safety factor and the stability factor. Design verification shall include computer modeling and analysis, and extensive strain gauge testing performed by an independent registered professional engineer. Written certification from the independent, third-party engineering firm shall be made available by the manufacturer upon request from the purchaser. **NO EXCEPTIONS**

All welding of aerial components -- including the aerial ladder sections, turntable, torque box, and outriggers -- shall be performed by welders who are certified to American Welding Society Standards D1.1, D1.2 and D1.3 as outlined in the current edition of NFPA 1901. **NO EXCEPTIONS**.

The weldment assemblies of each production unit shall be tested visually and mechanically by an ASNT-certified level II non-destructive test technician to comply with the current edition of NFPA 1901. Testing procedures shall conform to the American Welding Society Standard B1.10 Guide for non-destructive testing. Test methods include a thorough visual inspection of each weld and the use of dye penetrates where applicable.

Each ladder section shall consist of two (2) extruded aluminum side rails and a combination of aluminum rungs, tubular diagonals, verticals, and two (2) full-length handrails. The rungs on all sections shall be K-braced for maximum lateral stability. This K-bracing shall extend to the center of each rung to minimize ladder side deflection.

The ladder rungs shall be spaced on 14" centers and shall be designed with an integral skid-resistant surface to eliminate the need for rubber rung covers. A "D" shaped rung shall be utilized to provide a larger step surface at low angles and a more comfortable grip at elevated positions. The larger step surface is critical to distribute the load on the bottom of the firefighters` foot. Round rungs are not acceptable as they increase the stress load on the foot and are more likely to cause bruising. The minimum design load of each rung shall be 500 lbs. distributed over a 3-1/2" (3.5")-wide area in the center of the length of the rung as required in the current edition of NFPA 1901. **NO EXCEPTIONS.**

To provide a wide working area with an easy-to-grasp handrail, the aerial ladder shall exceed the requirements of the current edition of NFPA 1901 regarding the minimum ladder section inside width and the minimum handrail height by providing the following inside widths and handrail heights:

A fly section width of at least 25" is required to allow a 24" wide stokes basket to fit between the handrails.

Section	**Width**	**Height**
Base Section	37-5/8"	22-7/8"
Second Section	30-3/4"	19-3/8"
Fly Section	25-3/16"	16-1/4"

Ladder Extension/Retraction Mechanism

Both power extension and power retraction shall be furnished and shall meet the requirements of the current edition of NFPA 1901. Extension and retraction shall be by way of two (2) hydraulic cylinders mounted on each side of the base section of the aerial ladder. Each cylinder shall have a 3-1/4" (3.25") bore and a 59-1/2" (59.5") stroke.

The cylinders shall operate through a block and tackle cable arrangement to extend and retract the ladder. Maximum extension of the ladder is to be automatically limited by the stroke of the cylinders. The normal operating cable safety factor shall be 5.0 to 1 and the stall safety factor shall be 2.0 to 1 based on the breaking strength of the cables. The minimum ratio of the diameter of the block and tackle sheave to the diameter of the cable shall be 12.0 to 1 to allow smooth operation and reduce bending stresses on the cables. The cables shall be treated with Pre-Lube 6 for increased service life.

The cable sizes shall be as follows:

2nd section (4 cables - 2 extend, 2 retract)	7/16" 6 x 19 galvanized cable
Fly section (4 cables - 2 extend, 2 retract)	1/4" 7 x 19 galvanized cable

The aerial ladder sections shall slide within each other. Nylatron NSM pads shall be utilized between each section to minimize friction. Four (4) C-type interlocking load transfer stations shall enclose the pads. The transfer stations shall be located at the upper portion of the base and the second ladder sections.

Aerial Extension Indicator

Reflective tape stripes shall be installed on the aerial ladder handrail of the base section to indicate extension in 10` increments. A reflective dot on the base of the second section shall provide a visual reference for the operator to estimate aerial elevation.

Aerial Finish

To reduce maintenance expense, the aerial ladder shall have a natural aluminum swirled finish. This will also allow visible inspection of all ladder weld joints without having to remove paint or body filler to reveal the weld bead. Ladders finished with paint or with any other material that covers the base metal and weld joints are not acceptable. **NO EXCEPTIONS.**

Operation Times

The aerial ladder shall complete the elevation-extension-rotation test described in the current edition of NFPA 1901 in not more than 120 seconds or less. **NO EXCEPTIONS.** This test involves raising the aerial from the bedded position to full elevation and extension and rotating it 90 degrees. This test is to begin with the stabilizers deployed.

In addition to completing the test described above, the aerial ladder shall be capable of performing the following operations in the times noted:

Time to extend ladder	maximum 35 seconds
Time to retract ladder	maximum 25 seconds
Time to raise ladder	maximum 20 seconds
Time to lower ladder	maximum 30 seconds
Time to rotate 180 degrees	maximum 55 seconds

Aerial Ladder Rated Capacities

The aerial ladder shall have a rated capacity of 550 lbs. when the ladder is unsupported at full extension and 0 degrees elevation as defined by the current edition of NFPA 1901. This rated capacity consists of a 500 lb personnel rating and a 50 lb. equipment rating. The 50 lb. capacity for the equipment is for mounted equipment at the tip. This capacity may take the form of firefighters wearing personal protective gear, people being rescued, equipment, or any combination of loads not to exceed the rated tip capacity. The rated tip capacity shall be in addition to an allowance of 50 lbs. for equipment mounted at the tip of the ladder.

A sign mounted at the base of the aerial ladder shall communicate the aerial ladder capacity ratings for the following configurations when the ladder is in the unsupported, fully extended

configuration while maintaining a 2.5 to 1 safety margin. These capacities may take the form of firefighters wearing personal protective gear, people being rescued, equipment, or any combination of loads not to exceed the rated capacities. For purposes of this sign, it shall be assumed that each person weighs 250 lbs. In no case shall the actual combined weights of personnel, equipment, and other loads exceed the rated capacities. The loads for each configuration are in addition to an allowance of 50 lbs. for equipment mounted at the tip of the ladder.

Condition #1- Tip load only, no water flowing

Elevation	**Capacity**	**Pounds**
-8 to 40 degrees	2 people	500 lbs.
41 to 49 degrees	3 people	750 lbs.
50 to 76 degrees	4 people	1000 lbs.

Condition #2- Distributed loads no water flowing (These include one person at the tip)

Elevation	**Capacity**	**Pounds**
-8 to 30 degrees	3 people	750 lbs.
31 to 45 degrees	5 people	1250 lbs.
46 to 76 degrees	8 people	2000 lbs.

Condition #3- Ladder tip load while flowing 1000 gpm with pre-piped waterway

Elevation	**Capacity**	**Pounds**
-8 to 76 degrees	2 people	500 lbs.

Hydraulic System

The hydraulic fluid reservoir shall consist of a 52 gallon tank mounted to the torque box and plumbed to the suction side of the hydraulic pump. The tank shall be supplied with a removable top to allow access to the tank strainer filter. There shall be ports for a return line and a tank drain on the reservoir. The reservoir fill cap shall be marked "Hydraulic Oil Only". Gated valves under the tank shall facilitate filter changes. The hydraulic fluid reservoir shall have sufficient volume and be mounted in such a manner to minimize heat build up and meet the performance requirement in the current edition of NFPA 1901.

An interlock device shall be provided to prevent activation of the aerial ladder hydraulic pump until either the transmission is placed in neutral and the parking brake is set, or the transmission is placed in drive and the rear driveline is disengaged as outlined in NFPA 19.17.3.

All hydraulic components with non-sealing moving parts, whose failure could result in the movement of the aerial, shall have a minimum burst strength of four (4) times the maximum operating pressure to which the component is subjected in order to comply with the current edition of NFPA 1901.

All hydraulic components with dynamic sealing parts, whose failure could result in the movement of the aerial, shall not begin to extrude or otherwise fail at pressures at or below two (2) times the maximum operating pressure to which the component is subjected in order to comply with the current edition of NFPA 1901.

All hydraulic hoses and fittings shall have a minimum burst strength of at least three (3) times the maximum operating pressure to which the component is subjected in order to comply with the current edition of NFPA 1901.

All hydraulic tubing shall be made of stainless steel whenever possible. It shall have a minimum burst strength of four (4) times the maximum operating pressure to which it is subjected in order to exceed the requirements of the current edition of NFPA 1901. Hydraulic systems composed primarily of hose or galvanized steel lines shall not be acceptable due to the higher maintenance requirements of the system over the life of the vehicle. **NO EXCEPTIONS**

A hydraulic oil pressure gauge shall be supplied at the aerial ladder control station as required by the current edition of NFPA 1901.

The hydraulic system shall use 5w-20 multi-weight, SAE 32 grade oil. It shall incorporate the following filters in order to remove contaminants and provide dependable service:

Reservoir Breather: 10-micron
Magnetic Reservoir Strainer: 125-mesh
Pressure Filter (Torque Box): 3-micron
Return Filter: 10-micron

The aerial ladder hydraulic system shall be designed in such a manner that a hydraulic pump failure or line rupture shall not allow the aerial or outriggers to lose position. Hydraulic holding valves shall be mounted directly on the hydraulic cylinders. To ensure reliable performance of holding valves, hoses shall not be permitted between a holding valve and cylinder. **NO EXCEPTIONS.**

The aerial shall incorporate the use of stainless steel tubes inside the torque box and jack legs to minimize the possibility of hydraulic leaks.

Hydraulic power to the ladder shall be transferred from the torque box by a hydraulic swivel fitting.

Auxiliary Hydraulic Pump

The hydraulic system shall include an auxiliary 12-volt hydraulic pump powered by the chassis electrical system in case the vehicle engine or the primary hydraulic pump fails . The auxiliary pump shall allow operation at reduced speeds to store the aerial device and retract the outriggers for road transportation. Self-centering switches shall be provided at the turntable and at each stabilizer control station to operate the auxiliary system.

FORWARD AERIAL SUPPORT

The aerial ladder support shall be constructed from 7/8" thick steel plate. Bolt-in diagonal bracing shall be installed on the support structure in an "X" pattern to restrict to side movement. This design shall allow for a pre-determined amount of flex preventing premature failure that can be found in an overly rigid structure. The support shall be located behind the rear wall of the cab and shall be bolted to the frame rails to allow removal in case of accidental damage.

Aerial Torque Box

In order to maximize structural strength and vehicle stability while minimizing rear axle weight, a vertical cylindrical aerial torque box shall be used. Vehicles utilizing horizontal square aerial torque boxes are not acceptable because the heavy weight of these designs conflicts with the goal of utilizing a single rear axle.

The aerial torque box shall be welded from 10" x 28.5 lbs./ft. A36 grade structural steel channels with 3/8" (0.375") thick top and bottom plates and 3/8" (0.375") thick integral bulkheads. The pedestal shall be a 24" outside diameter cylinder with a 3/8" (0.375") wall and shall connect the rotation bearing mounting plate to the torque box.

The aerial torque box pedestal assembly shall be bolted to the chassis frame with sixteen (16) 3/4" (0.75") diameter Grade 8 bolts. It shall be utilized to mount the stabilizers and the reservoir for the aerial hydraulic system.

Stabilization System

The vehicle shall come equipped with an out-and-down stabilization system. The system shall consist of two (2) hydraulically-operated out-and-down style stabilizers welded to the torque box and mounted under the frame for a low center of gravity.

The stabilizers shall have a maximum spread of 16` across the centerlines of the footpads when fully extended. The internal stabilizer tubes shall be 8" x 10" with 1/2" thick top and bottom plates and 5/8" thick sides. They shall be made of steel with a 100,000-psi minimum yield strength and shall be extended out by hydraulic cylinders. The external stabilizer tubes shall be 9-3/4" x 11-3/4" with 3/8" wall thickness. The internal tubes shall slide on low friction pads.

The stabilizers shall provide the vehicle with a tip-over safety margin of 1.5 times the rated aerial ladder load in any position the aerial ladder can be placed when the vehicle is on a firm and level surface.

The aerial shall be able to sustain a 1-1/3 to 1 rated load on a 5 degree slope downward in the position most likely to cause overturning as outlined in NFPA 1901 19.21.3.1. The maximum grade the apparatus can be set up on is 6.8 degrees (12 percent). On a 6.8-degree (12 percent) grade, the apparatus can be leveled within a 3.4 degree (6 percent) operating range with the apparatus cab facing uphill.

The stabilizer extension cylinders shall have a 2.5" bore and a 51.5" stroke. The stabilizer lift cylinders shall be mounted on the end of the stabilizer tube and shall have a 4" bore and a 22" stroke.

The stabilizer cylinders shall be supplied with dual pilot-operated check valves on each stabilizer cylinder to hold the cylinder either in the retracted (stowed) or the extended (working) position should a hydraulic line be severed at any point in the hydraulic system. Stabilizers shall contain safety lock valves. This assures there will be no "leak down" of stabilizer legs. Mechanical pins are not required. This feature contributes to efficient set-up and field operation.

Each stabilizer leg shall have a 1/8" thick bright aluminum diamond plate shield, full height and width of the stabilizer opening, attached to the end of the leg. This plate shall serve as a protective guard and a mounting surface for the stabilizer warning lights. The top, forward, and rear edges shall be flanged for added strength. Each stabilizer shall have one (1) red warning light mounted on the outboard face of the protective guard.

The stabilizers shall be connected to a warning light in the cab to warn the operator when the stabilizers are deployed. A floodlight shall be provided in each stabilizer body opening to illuminate the stabilizer and the ground. The light shall automatically come on with the deployment of a stabilizer.

The ground contact area for each stabilizer shall be a 12" diameter circular disc without auxiliary stabilizer pads and a 24" x 24" square plate with auxiliary stabilizer pads deployed. The ground pressure shall not exceed 75 psi when the apparatus is fully loaded and the aerial device is carrying its rated capacity in every position. This shall be accomplished with the auxiliary stabilizer pads deployed.

Stabilizer Controls

The main stabilizer control panel shall be located on the rear of the apparatus to control the operation of the stabilization system. The panel shall be labels "JACKS" and shall provide a master on-off power switch and indicator light, two (2) yellow indicator lights - one (1) for the left jack and one (1) for the right jack - to signify when each jack is fully extended and is in firm contact with the ground, a green interlock indicator light to signify when both jacks (stabilizers) are set, and a manual transfer switch to allow the operator to manually shift the hydraulic power from the jacks (stabilizers) to the ladder once the interlock light is green.

Horizontal extension and vertical lift of the stabilizers shall be controlled by two (2) switches - one (1) for the left stabilizer and one (1) for the right stabilizer - located at the rear of the apparatus just above the brake light on each side, so that the operator may observe the stabilizers during deployment. In operation, the stabilizer on each side must be fully extended horizontally before hydraulic power is automatically shifted to the vertical lift cylinder to level the vehicle. An audible alarm with a minimum 87 dbA shall sound while the stabilizers are in motion as required by the current edition of NFPA 1901. Stabilizer deployment from the stored position to the operating position shall be completed in less than 60 seconds. **NO EXCEPTION** Two (2) switches to activate the auxiliary hydraulic pump shall also be provided - one (1) on each side

below the stabilizer switch - to retract the stabilizers in case the main hydraulic pump fails. The stabilizer switch and the auxiliary hydraulic pump switch on each side shall be protected from impacts by an inverted U-shaped guard made from aluminum diamond plate.

Two (2) switches - one (1) on each stabilizer leg - shall sense when the leg is in firm contact with the ground. This condition shall be indicated on the main stabilizer control panel by a yellow indicator light for each side.

Leveling of the apparatus shall be performed manually by the operator using two (2) color-coded level indicators at the rear of the apparatus in order to ensure a visual confirmation that it is safe to operate the aerial ladder. The indicator for the front-to-rear level shall be located inside the aerial ladder turntable stairwell on the left side of the vehicle near the rear. The indicator for the side-to-side level shall be located above the rubrail on the rear of the vehicle near the rear suction inlet. **NO EXCEPTIONS**

The aerial ladder hydraulic system shall be provided with an interlock that prevents rotation of the aerial ladder until both the stabilizers are down and properly set. Additionally, the system shall not permit stabilizer movement unless the aerial ladder is seated in the forward aerial support cradle in the travel position. Th e interlock system shall have a manual override with access through a door at the rear of the truck.

Upper Turntable

The upper turntable assembly shall connect the aerial ladder to the turntable bearing. It shall be fabricated from 3/8" A-572 grade 50 steel and shall have a mounting position for the aerial elevation cylinders, the ladder connecting pins, and the upper turntable operator`s position.

One (1) 34-1/4" diameter turntable bearing with a 3" drive gear face shall be bolted to the top of the bearing mounting plate with twenty-six (26) 3/4" diameter Grade 8 plated bolts. Gear teeth shall be stub tooth form. The rated overturning moment of the turntable bearing shall be a minimum of 238,000 ft-lbs.

The operator`s turntable platform shall be constructed of 3/16" aluminum treadplate with "Gator Grip" non-skid integral surface mounted on a tubular frame. The platform shall extend from the left side of the aerial control station to the right side ladder rail. The platform shall extend 23" from the pedestal control station base, with a width of approximately 18". The rear of the platform shall extend approximately 19" back from the turntable gear pedestal and shall be approximately 40" wide at the rear. The platform shall be fastened by grade 8 bolts. Two (2) tubular steel handrails, each with an anti-slip finish, shall be installed on the on the right and left sides of the turntable platform. Two (2) Fire Research brand ManSaver bars, equipped with tubular padding, shall be installed between the railings. The bars shall lift up and inward (towards the ladder) permitting easy entrance to the ladder and control console. The rails shall be a minimum 39-3/4" high and shall not increase the overall travel height of the vehicle.

Elevation Mechanism

Two (2) 5" diameter elevating cylinders shall be mounted on the underside of the base section of the aerial ladder. A 1-3/4" pin shall fasten each cylinder to the turntable and a 2" pin shall fasten each cylinder to the aerial ladder. The elevating cylinders shall be mounted utilizing spherical bearings on both ends of the cylinders. The cylinders shall function only to elevate the ladder and not as a structural member to stabilize the ladder side movement. The elevating cylinders shall be provided with pilot-operated check valves to prevent movement of the ladder in case of a loss of hydraulic pressure. The elevating cylinders shall be able to raise and lower the aerial ladder to any angle from -8 degrees to +76 degrees.

The elevation system shall be designed following the current edition of NFPA 1901. The elevation cylinders shall incorporate cushions on the upper limit of travel. The elevation cylinders shall also serve as a locking device to hold the aerial in the stored position for road travel.

Rotation Mechanism

The aerial shall be supplied with a powered rotation system as outlined in the current edition of NFPA 1901. This system shall provide continuous rotation under all rated conditions and shall be supplied with a brake to prevent unintentional rotation.

Rotation shall be accomplished by a high-torque hydraulic motor driven through a spring-engaged, hydraulically-released, multiple-disc brake into a planetary gear box. The gear box shall have a minimum continuous torque rating of 60,000 in. lbs. and a minimum intermittent torque rating of 120,000 in. lbs. The turntable bearing, ring gear teeth, spur gear, planetary gear box, and output shaft shall have a minimum safety factor of 2.5 to 1.

Hydraulic Swivel

A hydraulic swivel shall be installed to provide hydraulic fluid transfer to the aerial ladder cylinders, electrical power to the aerial ladder, and water delivery to the pre-plumbed waterway while permitting continuous 360-degree rotation. The swivel shall be environmentally-sealed to prevent contamination of the hydraulic fluid. The swivel shall include a 4" passage for waterflow. The number of hydraulic ports and electrical circuits shall be dependent on the type of aerial control system as noted below:

Control System	**Hydraulic Ports**	**Electrical Circuits**
Direct hydraulic controls	8	24
Advanced Aerial Control System	5	28
Advanced Aerial Control System - Deluxe	5	36

Aerial Ladder Control Station

An aerial ladder control station shall be supplied as outlined in the current edition of NFPA 1901. The control station shall be located on the left side of the aerial turntable. The apparatus shall be supplied with labels to warn of electrocution hazard. The control console shall provide a service access door on the front and side of the console to access hydraulic and electrical

connections. The electrical panel shall be contained in a junction box with labeled wires. The control console shall be angled, labeled, and supplied with lights for night operation.

Console Cover

A diamond plate contoured hinged cover shall be supplied to protect the console from the elements. The cover shall latch in the stored position and swing away from the console so as not to interfere with sight of the aerial device.

Aerial Ladder Control Levers

The control levers shall be arranged as outlined in the current edition of NFPA 1901. The first lever from the left shall be the extension control (forward for extend and back for retract). The second lever shall be the rotation control (forward for clockwise and back for counter clockwise). The third handle shall be the elevation control (forward for down and back for up). The aerial shall employ direct hydraulic controls for precise control and dependable service with minimal electrical functions. A ring around the control levers shall be provided to prevent unintentional movement.

Rung Alignment Indicator

A light on the control console shall indicate when the ladder rungs are aligned for climbing.

Aerial Ladder Alignment Indicator

A reflective arrow mounted to the body and the turntable shall indicate when the aerial ladder is aligned with the forward aerial ladder support.

Load Indication System

A lighted elevation/safe-load indicator diagram shall be located on the lower left side of the base section to indicate safe load capacity at any angle of elevation. The safe load indicator shall be 15" x 15" in size and shall clearly communicate the aerial ladder capacity in any one of the following conditions: tipload, tipload with water flowing, and distributed load at full extension. The chart shall identify capacity using graphic characters to indicate each 250 lb. increment. The chart shall be equipped with lighting and warn of electrocution hazards from power lines and lightning.

An extension indicator shall be located on the handrails of the base section to indicate feet of extension. The control pedestal shall also come equipped with a hydraulic oil pressure gauge and lights for night operation.

Aerial Waterway

One (1) 1,000 gpm pre-piped waterway shall be supplied as outlined in the current edition of NFPA 1901. The waterway shall telescope to the end of the fly section. A waterway of 4"

internal diameter shall pass through the turntable and a swivel joint to connect to the tubular aerial waterway. The tubular waterway shall run under the aerial ladder. The waterway tubes shall have the following sizes:

Base Section: 4-1/2" OD
Mid Section: 4" OD
3rd Section: 3-1/2" OD

The base section shall be constructed of regular aluminum and the second and third sections of the waterway shall be constructed of hard coat anodized aluminum and shall telescopic with the aerial ladder through sealed slip joints. The slip joints shall be designed with grease zerk fittings to facilitate lubrication.

A 1-1/2" drain valve shall be installed and operated from the rear of the apparatus to drain the waterway.

The water system shall be capable of flowing 1,000 gpm at 100 psi nozzle pressure at full elevation and extension. The friction loss between the tip and below the swivel shall not exceed 100 psi while flowing 1,000 gpm as outlined in NFPA 1901.

Waterway Relief Valve

An automatic relief valve preset at 250 psi shall be installed in the aerial waterway to prevent over-pressurization of waterway system. The relief valve shall be mounted in the lower portion of the waterway where it enters the aerial torque box frame and dumps under the apparatus.

Ladder Tip Steps

Two (2) folding steps shall be located near the ladder tip to provide a position for a firefighter using the ladder pipe/monitor as outlined in the current edition of NFPA 1901. The steps shall have a raised surface for traction and cut outs for easy manual deployment. Each step shall have a minimum load rating of 500 lbs. and shall have a minimum step area of 35 sq. in.

ISO Compliance

The manufacturer shall operate a Quality Management System meeting the requirements of ISO 9001:2000.

The International Organization for Standardization (ISO) is a recognized world leader in establishing and maintaining stringent manufacturing standards and values. The manufacturer`s certificate of compliance affirms that these principles form the basis for a quality system that unswervingly controls design, manufacture, installation, and service.

The manufacturer`s quality systems shall consist of, but not be limited to, all written quality procedures (aka QOP) and other procedures referenced within the pages of the manufacturer`s Quality Manual, as well as all Work Instructions, Workmanship Standards, and Calibration

Administration that directly or indirectly impacts products or processes. In addition, all apparatus assembly processes shall be documented for traceability and reference. The manufacturer shall also engage the services of a certified third party for testing purposes where required.

If the manufacturer operates more than one manufacturing facility each facility must be ISO certified.

By virtue of its ISO compliance the manufacturer shall provide an apparatus that is built to exacting standards, meets the customer`s expectations, and satisfies the customer`s requirements.

A copy of the manufacturer`s certificate of ISO compliance for each manufacturing facility shall be provided with the bid.

AERIAL HYDRAULIC SYSTEM OPTIONS

AERIAL HYDRAULIC OIL LEVEL GAUGE

A hydraulic oil level gauge shall be supplied for easy fluid level verification. The three-light system shall indicate full oil level with a green light, acceptable oil level with yellow light, and low oil level with a red light. The display shall be located on pump operator's panel.

AERIAL CONTROLS

AERIAL CONTROL SYSTEM

The aerial hydraulic system shall be equipped with a microprocessor based electric over hydraulic control system. The system shall include electronic ramping to provide smooth acceleration and deceleration of aerial functions during sudden movements of the operator control levers. The ladder shall utilize three (3) combination proportional control valves for smooth aerial device movements. The hydraulic system valve body shall be located in the turntable console.

The control system shall have manual overrides in the event of a system failure. The overrides shall be located directly on the electric / hydraulic control valve within easy reach of the turntable operator. The manual system shall be organized to match the base controllers with the functions clearly labeled.

The switch modules on the console shall be CAN based for reliable operation.

An emergency stop switch shall be provided on the console that de-energizes the PTO in the event the aerial must be stopped immediately.

Aerial Speed Switch

The control system shall be provided with a "creep speed" switch for precise aerial movement. When activated, the aerial shall operate a slow speed and the chassis engine will remain at idle speed.

Variable Ramping

A three (3) position switch shall be provided to select system ramping (ladder movement when initiating or ceasing movement of a control lever). The switch shall allow selection of normal, firm or soft ramping based on operator preference.

Display

A CAN based multifunction display shall be installed on the turntable control console. The display shall be a 3.2" backlit LCD to provide daylight readability and be IP67 rated. The display shall contain four (4) integrated navigation buttons and communicate via J1939 protocol.

The display shall provide the following information:

- Hydraulic system pressure
- Aerial hours
- Waterway flow
- Total waterway flow (with reset button)

The display shall be capable of showing system units in standard or metric values.

The background of the display shall change color based on status. Colors shall be blue/green for normal, yellow for caution and red for warning.

If equipped with breathing air the display shall provide the following additional information:

- Breathing air system max pressure (0, 2250, 4500 or 6000psi)
- Visual and audible alarms (alarms at 20% and 5%)
- Unique alarm tone with ground level visual indicator
- Alarm mute capability

If equipped with short jacking feature the display shall provide the following additional information:

- Rotation limited indicator
- Aerial angle in degrees
- Aerial tip load represented in 250 lb increments via simple firefighter icons
- System limit notifications (Example: "Right Rotation Limited – Short Jack")

Stow Switch

The control system shall also include a switch to deploy and stow the waterway monitor (if equipped with a pre-piped waterway).

Cradle Alignment Light

A green light shall be provided at the turntable control console to indicate when the aerial is aligned for bedding.

AERIAL CONTROLS AT LADDER TIP

A secondary aerial ladder operator`s position shall be supplied at the tip of the aerial ladder. The control station shall be designed to meet NFPA 1901 16-5.4. The turntable control station shall serve as the main control location and be capable of overriding the ladder tip control station. A momentary switch shall be supplied at the turntable control station to enable the tip controls. If the operator releases the momentary switch the tip controls shall deactivate.

The maximum speed of the aerial device shall be reduced when the ladder tip controls are in operation. The reduced speed shall not exceed the NFPA 1901 recommendation of:

- Rotation at full extension of 2 ft/sec (.6 m/sec)
- Elevation and lowering at 1 ft/sec (.3 m/sec)
- Extension and Retraction at .5 ft/sec (.15 m/sec)

The folding steps at the ladder tip shall be designed to prevent operator`s feet from protruding through the outermost fly section. The fold down steps shall be weight supporting before the ladder tip controls are functional.

The ladder tip controls shall be a CAN based switch module with six (6) individual switches to control rotation, extension, and elevation. The module shall have lights to indicate the turntable control station momentary switch is depressed and a light to show the tip control switches are enabled (indicating the tip step switches are also depressed).

PUMP PANEL AERIAL CONTROLS

An additional aerial control station shall be located at the pump operator`s panel. The control station shall be contained within the pump panel and not reduce body compartment space.

Ladder Controls

The pump panel control station shall utilize three (3) combination proportional control valves for smooth aerial device movements. The aerial control handles protected by a raised ring that encircles the handles.

System Control Switch Panel

The pump panel aerial control station shall have an eight button control switch module. The switch module shall be CAN based for reliable operation and support the following features:

- Controller power switch
- Aerial Speed Switch - The control station shall be provided with a "creep speed" switch for precise aerial movement. When activated, the aerial shall operate a slow speed and the chassis engine will remain at idle speed.
- Variable Ramping switch - Three (3) position switch to select system ramping (ladder movement when initiating or ceasing movement of a control lever). The switch shall allow selection of normal, firm or soft ramping based on operator preference.
- High engine idle switch (disabled during pump mode)
- Emergency aerial hydraulic pump switch
- Panel light switch
- Ladder light switch
- Auxillary switch for future use)

Monitor Control Switch Panel

The pump panel aerial control station shall have an eight button monitor control switch module (if equipped with a pre-piped waterway). The switch module shall be CAN based for reliable operation and support the following features:

- Left monitor rotation
- Right monitor rotation
- Up nozzle sweep
- Down nozzle sweep
- Streem to fog pattern
- Fog to stream pattern
- Monitor nozzle stow
- Monitor nozzle deploy

Emergency Stop

An emegency stop switch shall be provided on the panel that de-energizes the PTO in the event the aerial must be stopped immediately.

Cradle Alignment Light

A green light shall be provided at the pump panel station to indicate when the aerial is aligned for bedding.

Rung Alignment Light

An amber light shall be provided at the pump panel station to indicate when the aerial is aligned for climbing.

SHORT JACKING SYSTEM

The stabilizers shall be capable of multi-range short jack operation. The short jacking operation will allow for rapid set-up in congested/restricted areas. When short jacking is employed the aerial device shall be capable of operating within a 200 degree side envelope which includes the capacity to go 10 degrees past center both front and rear. The ability to set-up in congested areas is further enhanced in that mechanical safety pins are not required thus permitting the short side stabilizer to be deployed without having to be extended.

The system electronics shall be configured so as to prevent rotation to the short jack side and shall utilize proximity switches located outboard of the rotation gear. The system electronics shall also be configured so as to eliminate the requirement for a momentary switch to be engaged for operation in short jack mode. This function allows for normal aerial control operation during short jack deployment.

The system shall also have the capability to be double short jacked. This is particularly applicable for maintenance/servicing situations which may occur in extremely tight areas. This configuration shall allow the cab to be tilted without having to extend the outriggers. The ladder shall be capable of being rotated 20 degrees in this mode (10 degrees either side of center). When double short jacked the aerial shall also be capable of operating in a 20 degree range off the rear as well. Rotation to the rear double short jack operation zone shall be permitted only by first raising the fully retracted ladder to maximum elevation to prevent an un-stable condition.

Messages shall be provided in the aerial control system display located at turntable console to indicate when aerial movement is limited due to the outriggers being short jacked.

MONITORS

MONITOR FINISH

The aerial monitor(s) shall be ordered from the OEM manufacturer painted silver.

1000 GPM ELECTRIC MONITOR

The aerial ladder shall be equipped with an Akron style 3480 StreamMaster II electrically controlled monitor. The monitor shall be made from Akron`s unique lightweight Pyrolite construction to minimize ladder tip loads. The monitor shall be equipped with an Akron style 5177 Akromatic electrically controlled automatic nozzle capable of discharging 250-1,250 gpm at 80 psi nozzle pressure. This waterflow capability shall be available at any extension, elevation, or position without any restrictions while flowing 1,000 gpm. A minimum stability factor of 1.5 to 1 shall be maintained in this configuration.

The operational range of the electric monitor and nozzle shall be 135 degrees through the vertical plane (90 degrees upwards from a line perpendicular to the aerial ladder and 45 degrees downward), and 180 degrees through the horizontal plane (90 degrees to either side of the aerial ladder center line). The monitor shall be able to move in the horizontal and vertical axis simultaneously.

The monitor relay box shall include an electronic control system that is attached to the inlet base of the monitor and be totally encapsulated to prevent moisture intrusion. The monitor shall have fully enclosed motors and gears with built in manual override capability and quick-attach handles. A battery, which continuously charges from the vehicle power system shall provide power for monitor movement. Systems which do not utilize a battery shall not be acceptable due to the higher incidence of failure with this type of system. **NO EXCEPTIONS.**

Control switches for horizontal movement, vertical movement and pattern selection shall be located at the control panel.

Monitor Tip Controls

In addition to the controls at the operator console, electric monitor directional and stream controls shall be installed in close proximity to the monitor on the ladder to allow operation by a firefighter on the ladder.

WATERWAY OPTIONS

PINNED WATERWAY UPGRADE

A remote-controlled monitor/nozzle assembly shall be attached to a ladder fly section through C-channel slide pads which shall allow the monitor/nozzle assembly to be positioned at the tip of a section for maximum master stream reach or at the tip of the next section down for unobstructed rescue capabilities. The monitor/ nozzle assembly shall be pinned at either operating location with a single stainless steel "T" handle locking ball pin. A monitor control station shall be attached to the sliding monitor/nozzle assembly and shall move with it.

The turntable monitor controls shall be connected to the sliding monitor system using an electronic multiplexing system that sends all monitor control signals over a shielded pair of wires through a spring retract electric cable reel. The collector rings in the cable reel shall be specifically designed for accurate transmission of electronic signals.

A gel-cell rechargeable battery shall be located on the sliding monitor assembly. A dedicated ground wire and 12VDC positive charging wire shall be routed from the turntable control station through the electric cable reel to the monitor battery. The charging wire shall be directly connected to the chassis 12VDC battery system through a 20 amp auto reset circuit breaker.

The moveable monitor/nozzle assembly shall be capable of flowing from 300 gpm to 1000 gpm while maintaining a constant 80-100 psi nozzle pressure for maximum stream projection.

REAR INLET VALVE

A valve shall be installed in the waterway to permit the rear inlet to be used as a discharge. The valve control shall be rear mounted and labeled to indicate open or closed.

WATERWAY INLET

One (1) 4" inlet shall be provided at the rear of the apparatus and shall be connected to the vertical pedestal waterway piping to supply water to the aerial waterway from an outside source. All fabricated piping shall be constructed of a minimum of Schedule 10 stainless steel piping to help prevent corrosion. The threads shall be NST. A long handle chrome plated 4" NST cap shall be installed on the inlet.

WATERWAY PRESSURE GAUGE

The valve discharge gauges shall be 2 ½"(63mm) diameter Innovative Controls pressure gauges. Each gauge shall have a rugged corrosion free stainless steel case and clear scratch resistant molded crystals with captive O-ring seals to ensure distortion free viewing and seal the gauge. The gauges shall be filled with a synthetic mixture to dampen shock and vibration, lubricate the internal mechanisms, prevent lens condensation and ensure proper operation from –40F to +160F.
Each gauge shall exceed ANSI B40.1 Grade A requirements with an accuracy of +/- 1.5% full scale and include a size appropriate phosphorous bronze bourdon tube with a reinforced lap joint and large tube base to increase the tube life and gauge accuracy.
A polished chrome-plated stainless steel bezel shall be provided to prevent corrosion and protect the lens and gauge case. The gauges shall be installed into decorative chrome-plated mounting bezels that incorporate valve-identifying verbiage and/or color labels.
The gauges shall display a range from 0 to 400 psi with black graphics on a white background.

AERIAL WARNING LIGHTS

LED OUTRIGGER LIGHTS (PR)

Two (2) Truck-Lite model 91 LED outrigger warning lights with red lenses shall be provided.

The lights shall be surface mounted on the outrigger covers in compliance with current NFPA 1901.

AERIAL LIGHTING

LADDER BASE LIGHTING

Two (2) Whelen round 12 Super LED model PFBP12C floodlights with black housing and chrome rear cover shall be mounted one on each side at the bottom of the ladder base section. They shall be controlled from the turntable operating pedestal.

LADDER CLIMBING LIGHTS

A Luma-Bar Pathfinder LED lighting system shall be provided to illuminate the climbing area inside each ladder section. The strip type lights shall be located above ladder rung level and directed toward the centerline of the ladder to reduce glare. The lights shall be mounted to a 1.25" x .5" x .125" extruded aluminum channel and wired to not be an obstruction during climbing. The lights shall be controlled with the ladder lights switch at the operators control console.

The LED lights shall be Red.

LED 12V FLOOD LIGHT

A Whelen Micro Pioneer 12V LED flood light model MPPBBS shall be provided on a low profile pedestal mount.

The lighthead shall incorporate 12 white Super-LEDs installed in a black die-cast powder coated aluminum housing with a chrome finish polycarbonate cover. The light fixture shall measure 5" wide by 8.69" high by 3.25" deep. The 45W LED light head shall be rated at 4,100 usable Lumens that draws 3.5 amps. The light shall have a black fiberglass reinforced polycarbonate handle.

The low profile pedestal mount shall consist of a cast stainless steel pedestal base with cast stainless steel swivel mount stud, pivot, and hinge assembly.

The light head shall be provided with a weather-resistant on/off switch as well as a switch at the lower console to control the light when the aerial power circuit is activated.

The light assembly shall be mounted at the tip of the aerial as specified.

Location(s): left side tip.

QUARTZ LIGHT

A Fire Research Spectra LED 110V model SPA570-K20-ON top mount fixed pedestal light shall be installed on the aerial device and hardwired to the aerial tip. The light shall be fitted with a weather-resistant switch to control the light when the aerial power circuit is activated. The pedestal shall allow the lamp head to rotate 450 degrees and have a self adjusting friction brake to prevent arbitrary rotation. The pedestal shall have a round mounting base. Wiring shall extend from the pedestal bottom.

The lamphead shall have sixty (60) ultra-bright white LEDs, 48 for flood lighting and 12 to provide a spot light beam pattern. It shall operate at 120/240 volts AC, draw 2/1 amps, and generate 20,000 lumens of light. The lamphead shall have a unique lens that directs flood lighting onto the work area and focuses the spot light beam into the distance. The lamphead shall be no more than 5 7/8" high by 14" wide by 3 1/2" deep and have a heat resistant handle. The

lamphead and mounting arm shall be powder coated black. The LED scene light shall be for fire service use.

Location: left side tip, right side tip.

MISC AERIAL ELECTRICAL

AERIAL TIP RECEPTACLE

A 110 volt twist lock 20 amp receptacle outlet shall be installed at the tip of the aerial device and wired into an apparatus breaker box with a 30 amp breaker. The breaker shall be fitted with a GFI protection feature. The receptacle box shall be fitted with a weather-resistant cover.

AERIAL EQUIPMENT

HAND RAIL EXTENSIONS

Two (2) tubular steel hand rail extensions, each with an anti-slip finish, shall be installed on the on the right and left sides of the turntable platform hand rails. The rails shall extend from the rear of the vertical hand rails and shall not interfere with the operational envelope of the ladder.

STOKES BASKET BRACKETS

Brackets shall be provided to mount a stokes basket to the aerial base section while not in use. Brackets shall hold a Ferno Model 71 stokes. The stokes basket shall mount on the base section on the right side toward rear. Stokes not included.

LIFTING EYES

A pair of lifting eyes shall be located one each side at the ladder tip. The lifting eyes shall be constructed of 6061T6 aluminum and be welded one each side to the tip of the aerial`s fly section main rail. The hole in the eye shall have chamfered edges and be designed to allow attachment of 2" webbing. The lifting eyes shall have a capacity of 250 lbs. each / 500 lbs. Load on eyes and personnel at tip not to exceed rated capacity of the ladder.

AERIAL LADDER BRACKETS

ROOF LADDER BRACKET

A lift-out style roof ladder mounting bracket shall be installed on the outside of the ladder base section. The bracket shall be designed to hold a PRL-16 on left side of base section.

SIGN PLATES

AERIAL SIGN PLATE

Two (2) 10" x 144" x 1/8" (0.125") thick smooth aluminum plates shall be provided. The plates shall have 1" lips top and bottom for rigidity. Each sign plate shall be bolted on either side of the base section, approximately at the midpoint. The plates shall be provided to display the department`s name or other information. The plates shall be painted Job Color as specified by the customer.

AERIAL TESTING

THIRD-PARTY FLOW TEST

A flow test shall be conducted to determine that the water system is capable of flowing 1,000 gpm at 100 psi nozzle pressure with the aerial device at full extension and elevation. When the aerial apparatus is equipped with a fire pump, the test shall be conducted using the onboard pump. Intake pressure for the onboard pump shall not exceed 20 psi.

In addition to the flow test, a hydrostatic test shall be done on the waterway system. The permanent water system, piping, and monitor shall be hydrostatically tested at the maximum operating pressure required to flow 1,000 gpm at 100 psi nozzle pressure at maximum elevation and extension.

These results shall be certified by an independent, third-party testing organization, per NFPA 16.13.1 through 16.13.1.3.

AERIAL CERTIFICATION

All certification shall be performed by a certification organization that is accredited for inspection and testing systems on fire apparatus in accordance with ISO/IEC 17020.

The aerial ladder shall be tested in compliance with the current editions of NFPA 1901 and NFPA 1911. All critical structural components of the aerial shall include 100% nondestructive testing (NDT) before assembly and body mounting. All NDT testing shall be performed by Level II or Level III technicians who have been certified in the test methods used in accordance with ANSI/ASNT CP-189.

Welds for structural load-supporting elements shall be performed by certified welders under the guidelines of AWS. Each aluminum ladder section shall be subjected to 100% NDT visual weld inspection followed by Liquid Penetrant NDT inspection as required to qualify suspected weld defect indications. Each steel ladder section shall be subjected to 100% Magnetic Particle NDT weld inspection to assure the structural integrity of the welds.

A 100% Magnetic Particle weld inspection shall be conducted on the torque box, aerial support structure, outriggers, outrigger support structure and all other structural ferrous aerial components. This test shall be performed to assure the structural integrity of the weldment.

After the aerial is assembled and installed on the vehicle, an operational inspection shall be made and the aerial shall be tested to comply with the applicable standards in the current editions of NFPA 1901 and NFPA 1911.

In addition to the above tests, the aerial shall successfully complete the following operational tests:

1) The completed apparatus shall be placed on a firm, level surface with the aerial stabilizers extended and down. The aerial shall lift a test weight equal to the rated tip load capacity, as specified herein, with the aerial at full extension, 0 degrees elevation, and rotated 90 degrees to either side of the truck chassis. The test weight shall be lifted from 0 degrees to 15-20 degrees. The test weight shall be suspended from a position equal to the position of the outermost rung of the fly section or the center of the platform when so equipped. The aerial shall lift the test weight smoothly and evenly with no twisting or jerking. This test shall be performed at the normal hydraulic system relief valve setting. No temporary adjustments to the relief valve shall be allowed.

2) The completed apparatus shall be placed on a firm, level surface with the aerial ladder stabilizers extended and down. A test weight equal to 1.5 times the aerial`s rated tip load capacity, shall be suspended from a position equal to the position of the outermost rung of the fly section (or center of the platform when so equipped), with the aerial in the straight-ahead position. The aerial shall then be rotated a full 360 degrees around the vehicle with the aerial at full extension and at 0 degrees elevation (or high enough to clear vehicle-mounted equipment). The aerial and vehicle shall show no signs of instability. This test shall be performed with no water in the tank, or hose, ladders, or removable equipment that would act as a counterbalance in order to simulate a worst-case condition.

3) The completed apparatus shall be placed on a firm surface having a minimum 5 degrees side slope with the aerial stabilizers extended and down. A test weight equal to 1.5 times the aerial`s rated tip load capacity, shall be suspended from a position equal to the position of the outermost rung of the fly section (or center of the platform when so equipped), with the aerial in the straight-ahead position. The aerial shall then be rotated 90 degrees to the downhill side with the aerial at full extension, 0 degrees elevation (or high enough to clear vehicle-mounted equipment). The aerial and vehicle shall show no signs of instability, and all of the stabilizers shall remain firmly on the ground. This test shall be performed with no water in the tank, or hose, ladders, or removable equipment that would act as a counterbalance in order to simulate a worst-case condition.

4) The completed apparatus shall be placed on a firm, level surface with the aerial stabilizers extended and down. A test weight equal to 2.0 times the aerial`s rated tip load capacity, shall be suspended from a position equal to the position of the outermost rung of the fly section (or center of the platform when so equipped), with the aerial in the straight-ahead position at full extension and at 8 degrees elevation (or high enough to clear vehicle-mounted equipment). After ten (10) minutes, the weight shall be removed, and the aerial shall be inspected for any abnormal twist or deflection.

5) The completed apparatus shall be placed on a firm, level surface with the aerial stabilizers extended and down. The aerial will be positioned at full extension at 0 degrees elevation at some position out of the travel rest and off the side or rear of the truck. For units without a pre-piped waterway to the tip, a test weight of 220# shall be applied horizontally and perpendicular to the tip of the aerial at the location of the outermost rung. The rotation brake shall not release nor shall the aerial`s deflection exceed the manufacturer`s accepted tolerances. For aerials with pre-piped waterways, a test weight of 350# will be applied at the location of water nozzle.

Upon satisfactory completion of all inspections and tests, an independent third-party inspection firm shall submit a certificate indicating that all specified standards have been met.

GROUND LADDERS

ALCO-LITE ROOF LADDER [QTY: 3]

An Alco-Lite PRL-16, 16` aluminum roof ladder shall be provided. A pair of folding 3/4" (0.75") steel roof hooks shall be attached to one end of the ladder, and a pair of steel spiked feet on the other end. The ladder shall meet or exceed the requirements of the current edition of NFPA 1931.

ALCO-LITE EXTENSION LADDER

One (1) Alco-Lite PEL-24, 24` aluminum 2-section extension ladder shall be provided. The ladder shall meet or exceed the requirements of the current edition of NFPA 1931.

ALCO-LITE 3-SECTION EXTENSION LADDER

One (1) Alco-Lite PEL3-35, 35` aluminum 3-section extension ladder shall be provided. The fly section shall be operated by a cable and shall automatically extend as the center section is raised. The ladder shall meet or exceed the requirements of the current edition of NFPA 1931.

LITTLE GIANT MODEL 17 LADDER

A-Frame Ladder

One (1) Wing Enterprises Little Giant model 17 aluminum A-frame ladder shall be supplied. The ladder shall be equipped with a heavy gauge steel locking device and ladder shoes for extra safety. It shall be capable of being used either as a 9` to 15` variable-length straight ladder or as an adjustable step ladder with the ability to be erected on stairs or other offset horizontal surfaces.

ALCO-LITE FOLDING LADDER WITH SHOES

This unit shall be supplied with one (1) Alco-Lite FL-10, 10` 6" long aluminum folding attic ladder with safety shoes.

MISC LOOSE EQUIPMENT

WHEEL CHOCKS

Two (2) Zico model SAC-44 folding wheel chocks for up to 44" diameter tires shall be supplied and located per the customer. The SQCH-44-H horizontal holders and pair of chocks require a minimum storage area of 6" high, 10-1/2" wide and 22-3/8" deep.

DOT REQUIRED DRIVE AWAY KIT

Three (3) triangular warning reflectors with carrying case shall be supplied to satisfy the DOT requirement.

DAVID CLARK HEADSET [QTY: 2]

One (1) David Clark behind the head dual ear model H3442 headset shall be provided and shipped loose.

The headset shall feature:

- M-7A noise canceling electret microphone
- Hybrid wire/flex boom assembly, 280° rotating, for perfect microphone placement on left or right side
- Dynamic earphone elements
- Advanced Undercut Gel Ear Seals for superior comfort
- Microphone on/off switch
- 6 ft. extended coil cord
- Adjustable overhead support assembly
- Carbon steel nape-band spring, black finish, rotates for left or right side mic positioning
- Independently Certified NRR: 23dB

The intercom shall be ordered separately and is not included as part of the headset(s).

DAVID CLARK HEADSET [QTY: 2]

One (1) David Clark Single-ear, behind-the-head style (for use under fire helmets, model H3441 headset shall be provided and shipped loose.

The headset shall feature:

- Crisp, clear communication in demanding environments
- Single-ear, behind-the-head style (for use under fire helmets, hard-hats or other protective head gear)
- Provides isolated reception and exceptional speech intelligibility
- Made in the USA; Rugged and reliable

- M7-A electret, noise-canceling microphone
- Microphone on/off switch on ear cup
- Patented hybrid, wire-flex boom assembly, 280° rotational, for perfect microphone placement on left or right side
- Dynamic earphone element
- Reversible headband spring assembly allows positioning of microphone boom on left or right side
- Adjustable overhead support assembly for custom fit
- Undercut, 'Comfort Gel' ear seals cradle the ears to provide superior comfort
- No NRR (single-ear)

The intercom shall be ordered separately and is not included as part of the headset(s).

EXTERIOR PAINT

PAINT BREAK WITH DIP TO GRILLE

The cab shall have a two-tone paint break. The break line shall be approximately 31.5 inches below the cab roof drip rail. The paint break shall include a dip down to the corners of the cab grille.

UN-PAINTED PUMP/PRE-CONNECT MODULE(S)

All applicable pump application modules shall have a sanded finish (not painted job color). Includes upper and lower pump modules, crosswalk module and/or speedlay/pre-connect module (as applicable). Rear mounted body/pump module shall be painted job color.

PAINTED HEADER PLATE

The roll up door header plates shall be painted job color for all painted roll-up doors.

PAINT CHASSIS FRAME RAILS

Chassis frame rails, springs, cross-members, fire pump, drivelines, fuel and air tanks, axles, front bumper extensions with brackets and front suction piping (if applicable) shall be painted: FLNA3225E-1 Red.

PAINT CUSTOM CAB

The apparatus cab shall be painted Sikkens FLNA3225E-1 Red. The paint process shall meet or exceed current state regulations concerning paint operations. Pollution control shall include measures to protect the atmosphere, water, and soil. Contractor shall, upon demand, provide evidence that the manufacturing facility is in compliance with State EPA rules and regulations.

The aluminum cab exterior shall have no mounted components prior to painting to assure full coverage of metal treatments and paint to the exterior surfaces. Cab doors and any hinged smooth-plate compartment doors shall be painted separately to assure proper paint coverage on cab, door jambs and door edges.

Paint process shall feature Sikkens high solid LV products and be performed in the following steps:

- Corrosion Prevention - all aluminum surfaces shall be pre-treated with the Alodine 5700 conversion coating to provide superior corrosion resistance and excellent adhesion of the base coat.
- Sikkens Sealer/Primer LV - acrylic urethane sealer/primer shall be applied to guarantee excellent gloss hold-out, chip resistance and a uniform base color.
- Sikkens High Solid LVBT650 (Base coat) - a lead-free, chromate-free high solid acrylic urethane base coat shall be applied, providing excellent coverage and durability. A minimum of two (2) coats shall be applied.
- Sikkens High Solid LVBT650 (Clear coat) - high solid LV clear coat shall be applied as the final step in order to ensure full gloss and color retention and durability. A minimum of two (2) coats shall be applied.

Any location where aluminum is penetrated after painting, for the purpose of mounting steps, hand rails, doors, lights, or other specified components shall be treated at the point of penetration with a corrosion inhibiting pre-treatment (ECK Corrosion Control). The pre-treatment shall be applied to the aluminum sheet metal or aluminum extrusions in all locations where the aluminum has been penetrated. All hardware used in mounting steps, hand rails, doors, lights, or other specified components shall be individually treated with the corrosion inhibiting pre-treatment.

After the paint process is complete, the gloss rating of the unit shall be tested with a 20 degree gloss meter. Coating thickness shall be measured with a digital MIL gauge and the orange peel with a digital wave scan device.

PAINT CAB TWO-TONE COLOR

The upper section of the cab shall be painted FLNA4145 Black.

The paint process of the secondary cab color shall be the same as the primary color.

PAINT BODY LARGE

The apparatus body shall be painted Sikkens FLNA3225E-1 Red. The paint process shall meet or exceed current state regulations concerning paint operations. Pollution control shall include measures to protect the atmosphere, water, and soil. Contractor shall, upon demand, provide evidence that the manufacturing facility is in compliance with State EPA rules and regulations.

The aluminum body exterior shall have no mounted components prior to painting to assure full coverage of metal treatments and paint to the exterior surfaces of the body. Any vertically or

horizontally hinged smooth-plate compartment doors shall be painted separately to assure proper paint coverage on body, door jambs and door edges.

Paint process shall feature Sikkens high solid LV products and be performed in the following steps:

- Corrosion Prevention - all aluminum surfaces shall be pre-treated with the Alodine 5700 conversion coating to provide superior corrosion resistance and excellent adhesion of the base coat.
- Sikkens Sealer/Primer LV - acrylic urethane sealer/primer shall be applied to guarantee excellent gloss hold-out, chip resistance and a uniform base color.
- Sikkens High Solid LVBT650 (Base coat) - a lead-free, chromate-free high solid acrylic urethane base coat shall be applied, providing excellent coverage and durability. A minimum of two (2) coats shall be applied.
- Sikkens High Solid LVBT650 (Clear coat) - high solid LV clear coat shall be applied as the final step in order to ensure full gloss and color retention and durability. A minimum of two (2) coats shall be applied.

Any location where aluminum is penetrated after painting, for the purpose of mounting steps, hand rails, doors, lights, or other specified components shall be treated at the point of penetration with a corrosion inhibiting pre-treatment (ECK Corrosion Control). The pre-treatment shall be applied to the aluminum sheet metal or aluminum extrusions in all locations where the aluminum has been penetrated. All hardware used in mounting steps, hand rails, doors, lights, or other specified components shall be individually treated with the corrosion inhibiting pre-treatment.

After the paint process is complete, the gloss rating of the unit shall be tested with a 20 degree gloss meter. Coating thickness shall be measured with a digital MIL gauge and the orange peel with a digital wave scan device.

AERIAL PAINT

The lift cylinders, extension cylinders and upper turntable steelwork (less turntable) shall be painted to match the upper "two-tone" cab color.

PAINTED REEL

The pinned waterway reel shall be painted job color.

Note: In order to not void the reel`s warranty, it must be painted as a complete unit. Due to the varying materials and assembled components being painted, it will not be covered under the same 10 year paint warranty as the cab and body.

GRILLE PAINTED FLAG

The front cab grille mesh shall be air brush painted with a waving United States flag.

Standard and/or extended warranties shall not apply to this option.

AIR CONDITIONING CONDENSER(S)

The air conditioning condenser cover(s) mounted on the roof of the cab shall be painted color: FLNA4145 Black.

SANDED EXTRUSIONS

Rear cab extrusions shall be sanded finish same height as rear cab diamond plate overlay panels.

INTERIOR PAINT

CAB INTERIOR PAINT

The interior of the cab shall be painted Zolatone gray #20-64. Prior to painting, all exposed interior metal surfaces shall be pretreated using a corrosion prevention system.

LETTERING

SCOTCHLITE LETTER [QTY: 4]

Scotchlite letters taller than 12" shall be applied.

The exact size, color and location of the letters shall be as specified by the customer.

SIGN GOLD LETTER [QTY: 36]

Sign Gold letters upto 6" tall shall be applied.

The exact size and location of the letters shall be as specified by the customer.

SIGN GOLD LETTERS [QTY: 26]

Sign Gold letters upto 12" tall shall be applied.

The exact size, color and location of the letters shall be as specified by the customer.

LETTERING SHADE AND/OR OUTLINE [QTY: 66]

Existing letters shall be shaded and/or outlined as specified by the customer to provide a contrast.

STRIPING

REFLECTIVE TAPE ON STABILIZERS

The two aerial ladder stabilizers which protrude beyond the side of the body shall be striped with white reflective tape. The tape shall be visible from the front and rear of the unit.

REFLECTIVE STRIPE IN RUBRAIL

The reflective stripe in the body rubrail shall be white.

CAB AND BODY STRIPE

A single Scotchlite stripe, upto 6 inches in width shall be installed on the cab and body . The stripe shall have a hockey style, Z or S style or any other customer specific design style.

The stripe shall be NFPA compliant and the size, color and location shall be as specified by the customer.

CAB AND BODY STRIPE [QTY: 2]

An additional Scotchlite stripe, upto 3 inches in width shall be installed on the cab and body.

The stripe shall be NFPA compliant and the design, size, color and location shall be as specified by the customer.

SCOTCHLITE CAB STRIPE

Scotchlite cab stripe shall be 3/4" in width total, 1/2" gold stripe with a 1/8" customer specified color outline on both sides and a clear polyurethane coating. Stripe shall be centrally located and shall contour with the cab, following the paint break.

REAR BODY SCOTCHLITE STRIPING

Printed chevron style Scotchlite striping shall be provided on the rear of the apparatus. The stripes shall consist of 6" Red/Lemon Yellow alternating stripes in an "A" pattern. The striping shall be located on the rear facing extrusions, panels, doors and inboard/outboard of the beavertails if applicable.

DESIGNATED STANDING / WALKING AREA INDICATION

1" wide yellow perimeter marking consisting of individual Reflexite diamonds shall be applied to indicate the outside edge of designated standing and walking areas above 48" from the ground in compliance with 2016 NFPA 1901. Steps, ladders and areas with a railing or structure at least 12" high are excluded from this requirement.

GRAPHICS

CUSTOMER SUPPLIED LOGO [QTY: 4]

A logo shall be supplied by the customer and installed as specified.

Location: reference graphics layout drawing.

SIGNGOLD LOGO [QTY: 2]

A SignGold customer logo (up to 12") supplied to E-ONE`s Graphics department in a digital format to assist with design. Logo to be installed reference graphics layout drawing.

WARRANTY / STANDARD & EXTENDED

STANDARD 1 YEAR WARRANTY

The apparatus manufacturer shall provide a full 1-year standard warranty. All components manufactured by the apparatus manufacturer shall be covered against defects in materials or workmanship for a 1-year period. All components covered by separate suppliers such as engines, transmissions, tires, and batteries shall maintain the warranty as provided by the component supplier. A copy of the warranty document shall be provided with the proposal.

LIFETIME FRAME WARRANTY

The apparatus manufacturer shall provide a full lifetime frame structural warranty. This warranty shall cover all apparatus manufacturer designed frame, frame members, and cross-members against defects in materials or workmanship for the lifetime of the covered apparatus. A copy of the warranty document shall be provided with the proposal. Frame warranties that do not cover cross-members for the life of the vehicle shall not be acceptable.

10 YEAR 100,000 MILE STRUCTURAL WARRANTY

The apparatus manufacturer shall provide a comprehensive 10 year/100,000 mile structural warranty. This warranty shall cover all structural components of the cab and/or body manufactured by the apparatus manufacturer against defects in materials or workmanship for 10 years or 100,000 miles, whichever occurs first. Excluded from this warranty are all hardware, mechanical items, electrical items, or paint finishes. A copy of the warranty document shall be provided with the proposal.

10 YEAR STAINLESS STEEL PLUMBING WARRANTY

The apparatus manufacturer shall provide a full 10-year stainless steel plumbing components warranty. This warranty shall cover defects in materials or workmanship of apparatus manufacturer designed foam/water plumbing system stainless steel components for 10 years. A copy of the warranty document shall be provided with the proposal.

20 YEAR AERIAL DEVICE STRUCTURAL WARRANTY

The aerial manufacturer shall provide a 20 year structural integrity warranty on the aerial device. This warranty shall cover structural components and shall be extended for a period of 20 years after the date on which the vehicle is delivered to the original purchaser. A copy of the warranty document shall be provided with the proposal. Please refer to warranty document for complete details and exclusions.

10 YEAR PAINT AND CORROSION WARRANTY

The apparatus manufacturer shall provide a 10-year limited paint and corrosion perforation warranty. This warranty shall cover paint peeling, cracking, blistering, and corrosion provided the vehicle is used in a normal and reasonable manner.

The paint shall be prorated for 10 years as follows:

Topcoat & Appearance:
(Gloss, Color Retention, Cracking)
0 to 72 months 100%
73 to 120 months 50%

Coating System, Adhesion & Corrosion:
(Includes Dissimilar metal corrosion, Flaking, Blistering, Bubbling)
0 to 36 months 100%
37 to 84 months 50%
85 to 120 months 25%

Corrosion perforation shall be covered 100% for 10 years. Corrosion perforation is defined as complete penetration through the exterior metal of the apparatus.

The warranty period shall begin upon delivery of the apparatus to the original user-purchaser. A copy of the warranty document shall be provided with the proposal.

UV paint fade shall be covered in a separate warranty supplied by Akzo Nobel (Sikkens) and shall be for a minimum of 10 years.

25 YEAR FRAME RAIL CORROSION WARRANTY

The chassis manufacturer shall provide a 25 year corrosion warranty on the chassis frame rails. This warranty shall cover the chassis frame rails, including frame rail liners (if equipped), for a period of 25 years after the date on which the vehicle is delivered to the original purchaser. A copy of the warranty document shall be provided with the proposal. Please refer to warranty document for complete details and exclusions.

MERITOR FRONT AXLE WARRANTY

A 5-year/unlimited miles, 5-year parts and 5-year labor **front non-drive steer** axle warranty shall be provided by Meritor Automotive or a 2-year/unlimited miles, 2-year parts and 2-year labor **front drive steer** axle warranty shall be provided by Meritor Automotive.

MERITOR REAR AXLE WARRANTY

A 5-year/unlimited miles, 5-year parts and 5-year labor rear drive single or rear drive tandem axle warranty shall be provided by Meritor Automotive.

SUPPORT, DELIVERY, INSPECTIONS AND MANUALS

TRAINING

The manufacturer shall provide three (3) days of training covering vehicle maintenance and operational familiarization.

This training shall be provided by a full time, manufacturer employee trainer who specializes in aerial training.

PUMP PANEL APPROVAL DRAWING

A detailed large scale approval drawing of the pump panel(s) shall be provided. The drawing shall be provided on an purchased unit prior to the construction process.

APPROVAL DRAWINGS

A general arrangement drawing depicting the vehicles appearance shall be provided. The drawing shall consist of left side, right side, front, and rear elevation views.

Vehicles requiring pump controls shall include a general arrangement view of the pump operator`s position, scaled the same as the elevation views.

APPROVAL DRAWINGS - DASH PANEL LAYOUT

A detailed large scale approval drawing of the dash/console panel layout shall be provided. The drawing shall be provided on an purchased unit prior to the construction process.

ELECTRONIC MANUALS

Two (2) copies of all operator, service, and parts manuals MUST be supplied at the time of delivery in digital format -NO EXCEPTIONS! The electronic manuals shall include the following information:

- Operating Instructions, descriptions, specifications, and ratings of the cab, chassis, body, aerial (if applicable), installed components, and auxiliary systems.

- Warnings and cautions pertaining to the operation and maintenance of the fire apparatus and firefighting systems.
- Charts, tables, checklists, and illustrations relating to lubrication, cleaning, troubleshooting, diagnostics, and inspections.
- Instructions regarding the frequency and procedure for recommended maintenance.
- Maintenance instructions for the repair and replacement of installed components.
- Parts listing with descriptions and illustrations for identification.
- Warranty descriptions and coverage.

The electronic document shall incorporate a navigation page with electronic links to the operator`s manual, service manual, parts manual, and warranty information, as well as instructions on how to use the manual. Each copy shall include a table of contents with links to the specified documents or illustrations.

The electronic document must be formatted in such a manner as to allow not only the printing of the entire manual, but to also the cutting, pasting, or copying of individual documents to other electronic media, such as electronic mail, memos, and the like.

A find feature shall be included to allow for searches by text or by part number.

These electronic manuals shall be accessible from any computer operating system capable of supporting portable document format (PDF). Permanent copies of all pertinent data shall be kept file at both the local dealership and at the manufacturer`s location.

NOTE: Engine overhaul, engine parts, transmission overhaul, and transmission parts manuals are not included.

FIRE APPARATUS SAFETY GUIDE

Fire Apparatus Safety Guide published by FAMA, latest edition. This safety manual is intended to point out some of the basic safety situations that may be encountered during the normal operation and maintenance of a fire apparatus and to suggest possible ways of dealing with these situations. This manual is NOT a substitute for the E-ONE`s fire apparatus operator and maintenance manuals or commercial chassis manufacturer`s operator and maintenance manuals.

DEALER ADDED EQUIPMENT

DEALER PROVIDED FACTORY INSPECTIONS

Jon's Mid America will provide one (2) factory inspection trips to the apparatus manufacturing facility. Transportation, meals, lodging, and other requisite expenses will be Jon's Mid America's responsibility. Accommodations shall be for one (3) Fire Department representative per trip. The factory visit shall occur at the following stages of production of the apparatus: Pre-construction / blueprint review and Final inspection upon completion. Travel arrangements more than 300 miles from the manufacturing facility will be via commercial airline transportation.

CITY of JOPLIN MISSOURI E-ONE HP75 HGAC PROPOSAL
Proposed by Jon's Mid America Fire Apparatus

DEALER DRIVE-AWAY FROM FACTORY

A qualified and responsible representative of Jon's Mid America will drive the apparatus, under it's own power, from the manufacturing facility in Nesquehoning, PA to Jon's Mid America Fire Apparatus in Rogersville, MO. This drive out is to ensure proper engine and drivetrain break-in and to identify any potential drive-train issues. After transportation from the factory or immediately prior to delivery to the fire department, the apparatus will receive a pre-delivery service consisting of: engine oil & all fluids filled to proper capacity, operational test of all fire pumping and related systems, adjustment of engine to manufacturers specifications as needed, complete inspection, including all electrical and mechanical devices, for proper operation and correction of leaks or obvious problems. The vehicle will also receive a thorough cosmetic detailing including any required paint touch-up.

CITY OF JOPLIN
COUNCIL AGENDA ITEM

ITEM
Council Bill 2020-602: authorizing the City of Joplin to enter into a first amendment to memorandum of understanding with the Wildcat Glades Friends Group, a Missouri Nonprofit Corporation ("Friends Group") for the purpose of establishing responsibilities in maintaining and operating Wildcat Park.

MEETING DATE
January 21, 2020

ORIGINATING DEPT
Parks

ATTACHMENTS
CB2020-602 Ordinance; Exhibit A: City-Friends Group Amendment to MOU; Exhibit B: City-Friends Group MOU

REVIEWED BY
Dept. Head: Paul Bloomberg; City Attorney: Peter Edwards; Interim City Manager: Dan Pekarek

SUMMARY
This Council Bill authorizes the City to enter into a first amendment to MOU with the Friends Group for the purpose of establishing responsibilities in maintaining and operating Wildcat Park.

BACKGROUND
In 2019, the City, MDC, and Friends Group entered into a series of MOUs concerning Wildcat Park. Although the Friends Group shares space with MDC, the Friends Group has discovered that it regularly has scheduling conflicts with MDC. Similarly, the Friends Group has found that it does not have sufficient work space for its volunteers. Accordingly, the Friends Group desires to construct an education cottage consistent with the drawings attached hereto. The Friends Group is solely responsible for the cost of any such improvements, including construction, maintenance, repair, and operational costs after completion. At no cost to City, any such improvements, including fixtures, shall become City's property when this Agreement is terminated. In the alternative, at no cost to City, City may require the Friends Group to demolish and remove any such improvements when this Agreement is terminated, to be completed within one (1) year of termination.

FUNDING SOURCE
N/A

RECOMMENDATION
Staff recommends adoption of this Council Bill on a non-emergency basis.

COUNCIL BILL NO. 2020-602 ORDINANCE NO

AN ORDINANCE authorizing the City of Joplin to enter into a first amendment to memorandum of understanding with the Wildcat Glades Friends Group, a Missouri Nonprofit Corporation ("Friends Group") for the purpose of establishing responsibilities in maintaining and operating Wildcat Park; and authorizing the Interim City Manager to execute said memorandum of understanding by and on behalf of the City of Joplin.

BE IT ORDAINED BY THE COUNCIL OF THE CITY OF JOPLIN, MISSOURI, as follows:

Section 1. That the first amendment to memorandum of understanding with the Friends Group for the purpose of establishing responsibilities in maintaining and operating Wildcat Park, a true and accurate copy of said agreement being attached hereto and incorporated as "Exhibit A," be and the same is hereby approved.

Section 2. That the City Manager of the City of Joplin, Missouri, or his designee, is hereby authorized and directed to execute said agreements, or agreements in substantially similar form, by and on behalf of the City of Joplin.

PASSED BY THE COUNCIL OF THE CITY OF JOPLIN, MISSOURI, this _____ day of _____, 2020, by a vote of _____.

_____
Gary L. Shaw, Mayor

ATTEST:

_____
Barbara J. Gollhofer, City Clerk

APPROVED AS TO FORM:

_____
Peter C. Edwards, City Attorney

FIRST AMENDMENT TO
MEMORANDUM OF UNDERSTANDING AND AGREEMENT

This First Amendment to Memorandum of Understanding and Agreement ("Agreement") is made and entered into this ____ day of February, 2020, by and between the City of Joplin, Missouri, a Municipal Corporation (hereinafter "City") and Wildcat Glades Friends Group, a Missouri Nonprofit Corporation (hereinafter "Friends"), with the City and Friends being referred to collectively as the "parties."

WHEREAS, City and Friends entered into a Memorandum of Understanding and Agreement effective June 3, 2019, wherein City and Friends established respective responsibilities concerning Wildcat Park; and

WHEREAS, Friends desires to make improvements to Wildcat Park, and the parties desire to establish their respective rights concerning said improvements;

NOW, THEREFORE, in consideration of the mutual agreements set forth below, and other good and valuable consideration, the parties do hereby agree as follows:

1. 6. Termination, is hereby amended by changing the notice requirement from ninety (90) days to one hundred twenty (120) days.

2. The Agreement is hereby amended to establish a new paragraph 13 as follows:

"13. Improvements to the Real Estate. Friends is authorized to make improvements to the real estate. These improvements will generally consist of the construction of an education cottage building, consistent with the drawings attached hereto and incorporated by reference as Exhibit C. Friends is solely responsible for the cost of any such improvements, including construction, maintenance, repair, and operational costs after completion. City will have the right to enter any such improvements at reasonable times to inspect the same upon seventy-two (72) hours written notice to Friends. In the event of an emergency situation, City may enter without prior notice to or the consent of Friends. At no cost to City, any such improvements, including fixtures, shall become City's property when this Agreement is terminated. In the alternative, at no cost to City, City may require Friends to demolish and remove any such improvements when this Agreement is terminated, to be completed within one (1) year of termination."

3. The Agreement is hereby amended to establish a new paragraph 14 as follows:

"14. Personal property. At City's direction, Friends is authorized to store and use personal property at Wildcat Park, in and on the improvements. Friends will maintain ownership of any such personal property. Friends agrees to remove any such personal property from Wildcat Park within thirty (30) days of termination. If Friends fails or refuses to remove any such personal

property from Wildcat Park within thirty (30) days of termination, at no cost to City, said property will become City's property."

4. The Agreement is hereby amended to establish a new paragraph 15 as follows:

"15. Hold Harmless. Friends acknowledges and agrees that City makes no representations or warranties regarding Wildcat Park, including whether it is suitable for use as described in Exhibit C or any other purpose. Friends agrees to hold City harmless against and from any and all loss, suits, causes of action, proceedings, costs, damages, liabilities, and expenses arising from or related to this Memorandum of Understanding and Agreement, including use as described in Exhibit C."

5. All other terms, conditions and requirements of the Memorandum of Understanding and Agreement shall remain in full force and effect, except as modified by this Amendment.

6. This document may be signed in separate counterparts by the parties and the signed counterparts, taken together, shall be deemed to constitute an executed original of this document.

CITY OF JOPLIN:	**WILDCAT GLADES FRIENDS GROUP:**
By:_____	By:_____
Name:_____	Name:_____
Title:_____	Title:_____
Date:_____	Date:_____

MEMORANDUM OF UNDERSTANDING

This memorandum of understanding (herein "MOU") is made on this 3rd day of June, 2019, by and between the Wildcat Glades Friends Group, a Missouri Nonprofit Corporation (hereinafter referred to as "Friends"), and the City of Joplin, a Missouri Municipal Corporation (hereinafter referred to as "City").

WHEREAS, City owns Wildcat Park (hereinafter referred to as "Park"), a map of which is attached hereto and incorporated by reference as Exhibit A; and

WHEREAS, Friends is a Missouri Nonprofit Corporation formed by citizens of the Joplin, MO area in early 2018; and

WHEREAS, Friends' purpose is "To protect the area known as Wildcat Park and the surrounding chert glade environment, habitat, and wildlife by promoting awareness and sustainability, providing education and recreation space and programs, and sponsoring nature-based activities."

NOW, THEREFORE, in consideration of the mutual promises set forth herein and for the other good and valuable consideration, the receipt and sufficiency of which is hereby acknowledged, Friends and City agree as follows:

1. Responsibilities of Friends. Friends will assist City in maintaining and operating the Park, including but not limited to:

a. Friends will screen and train any volunteers. Furthermore, any volunteers will be required to sign a Volunteer Agreement, attached hereto and incorporated by reference as Exhibit B.

b. Trail Stewardship. Friends will assist City in the maintenance and operation of the

EXH. A

trail system including but not limited to maintaining the path and adjacent landscaping (approximately two (2) feet on either side of the trail) where it is reasonably practical and safe to do so, and keeping the same clear of obstruction, such as trash, vegetation, etc. Friends will immediately notify the City of any dangerous condition on the trail and will not attempt to remedy the same.

c. Water Festival. Friends has agreed to assume primary responsibility for the Water Festival, which is an event held in early August and provides educational and recreational activities for the public. Friends and City agree to make a good faith effort to work together to assure the safety of the attendees and the success of the event.

d. Pavilion. Friends agrees to maintain the pavilion, including cleaning and removal of recycling and trash. Friends is permitted to rent the pavilion for a reasonable amount in order to cover the costs associated with these responsibilities.

e. Ball Fields. Friends and City agree to make a good faith effort to work together to facilitate future events and programming in the park area currently occupied by the ball fields.

2. Responsibilities of City. City will bear primary responsibility in maintaining and operating the Park.

3. Term. The term of this MOU shall be for a period of one (1) year from the date hereof. This MOU shall automatically renew for up to four (4) successive one (1) year terms upon the same terms, covenants, and conditions as herein specified.

4. Insurance. Friends shall provide liability insurance during the term of this Agreement, issued by an insurance company authorized to do business in the State of Missouri, covering City, its agents, employees, and invitees, and naming City as an additional insured, in the amount of One Million Dollars ($1,000,000.00) for Combined Single Limit for Personal Injury or Property

Damage. Such insurance shall be evidenced by filing with the City an Insurance Certificate, naming City as an additional insured under such policy, and providing that such policy shall not be cancelled without thirty (30) days written notice to City. Friends agrees to indemnify and hold and save harmless the City from any and all damages, claims, and assessments of every type and character arising from Friends' activities at or in any way related to the Park.

5. Nature of Relationship. Friends shall perform as an independent contractor and shall not hold itself out to third parties as an agent of City. Friends shall not be considered an agent of City nor shall any of the employees, agents, officers, members, or other personnel of Friends be considered sub-agents of City.

6. Termination. Either party may terminate this MOU at any time by giving ninety (90) days' written notice to the other party.

7. Notices. All notices, requests, and demands to or upon the parties of the MOU shall be deemed to have been given or made when delivered by hand or via certified mail addressed as follows or to other such addresses as may be hereafter designated in writing:

City: City of Joplin
602 S. Main St.
Joplin, MO 64801

Friends: Wildcat Glades Friends Group
P.O. Box 3063
Joplin, MO 64803

8. Amendments. This Agreement contains all of the agreements and conditions made between the parties and may only be modified by written agreement signed by all parties to this Agreement.

9. Assignment. This Agreement shall not be assignable by Friends without the express written consent of City being first obtained.

10. Choice of Law. This Agreement has been made, and its validity, performance, and effect shall be determined, in accordance with the laws of the State of Missouri, and venue for

litigation between the parties shall be solely and exclusively in the Circuit Court of Jasper County, Missouri, or the United States District Court for the Western District of Missouri.

11. Compliance with the Law. Friends agrees to comply with all applicable laws in connection with the performance of this MOU.

12. Severability: The invalidity, illegality, or unenforceability of any provision of this MOU shall not affect the validity, legality, or enforceability of the other provisions of this MOU which shall remain effective.

IN WITNESS WHEREOF, this Memorandum of Understanding has been executed and approved and is effective and operative as to each of the parties as herein provided.

City of Joplin, Missouri

By: Daniel Pekarek
Daniel Pekarek, Interim City Manager

ATTEST:

By: Barbara J. Gollhofer
Barbara J. Gollhofer, City Clerk

Wildcat Glades Friends Group

By: Steve Geardea
(Print) Steve Geardea
(Title) President

ATTEST:

By: Robin Standridge
(Print) Robin Standridge
(Title) Executive Director

STRUCTURAL GENERAL NOTES
DIVISION 1 – GENERAL REQUIREMENTS

1. THESE DRAWINGS INCLUDING THE INFORMATION CONTAINED HEREON SHALL REMAIN THE PROPERTY OF FALL RIVER HOLDINGS, LLC., WORLDWIDE STEEL BUILDINGS, AND VAN DEURZEN AND ASSOCIATES, P.A. AND ARE PROVIDED SOLELY FOR ERECTING THE BUILDING DESCRIBED IN THE APPLICABLE PURCHASE ORDER AND SHALL NOT BE MODIFIED, REPRODUCED OR USED FOR ANY OTHER PURPOSE WITHOUT PRIOR WRITTEN CONSENT OF FALL RIVER HOLDINGS, LLC., WORLDWIDE STEEL BUILDINGS, AND VAN DEURZEN AND ASSOCIATES, P.A.
2. THE GENERAL CONTRACTOR AND/OR ERECTOR SHALL BE SOLELY RESPONSIBLE FOR GOOD QUALITY WORKMANSHIP IN ERECTING THIS BUILDING IN CONFORMANCE WITH THESE DRAWINGS, DETAILS REFERENCED ON THESE DRAWINGS, WORLDWIDE STEEL BUILDING ERECTION MANUAL AND INDUSTRY STANDARDS PERTAINING TO PROPER ERECTION, INCLUDING THE CORRECT USE OF TEMPORARY BRACING.
3. THE CONTRACTOR AND/OR ERECTOR SHALL EXAMINE ACTUAL JOB CONDITIONS AND BE RESPONSIBLE FOR VERIFYING ALL DIMENSIONS AND ELEVATIONS SHOWN ON THESE ERECTION PLANS WITH THOSE SHOWN ON THE CONTRACT DOCUMENTS. IF ERRORS, OMISSIONS OR DISCREPANCIES ARE FOUND THEY SHALL BE REPORTED TO VAN DEURZEN AND ASSOCIATES, P.A. BEFORE PROCEEDING WITH THE WORK.
4. INSTALLATION OF ADEQUATE TEMPORARY BRACING FOR USE UNTIL CONSTRUCTION IS COMPLETE IS THE RESPONSIBILITY OF THE ERECTOR.
5. EXACT LOCATION OF WINDOWS, OVERHEAD DOORS, AND WALK DOORS SHALL BE DETERMINED DURING BUILDING ERECTION. TRUSSES AND DIAGONAL BRACING SHALL NOT BE MOVED TO INSTALL WINDOWS, OVERHEAD DOORS, AND WALK DOORS.
6. CONCRETE GROUT, ANCHOR BOLTS, AND ANY OTHER EMBEDDED ITEMS ARE TO BE FURNISHED BY OTHERS.
7. ANCHOR BOLT DIAMETERS WERE DETERMINED BY ALLOWABLE SHEAR AND TENSION PER AISC SPECIFICATIONS (FY = 36 KSI). ANCHOR BOLT LENGTH AND METHOD OF TRANSFERRING FORCES FROM ANCHOR BOLTS TO FOOTINGS ARE TO BE DETERMINED BY OTHERS.
8. DESIGN LOADS AND REACTIONS ARE FURNISHED ON THIS DRAWING.
9. FOUNDATION MUST BE LEVEL, SQUARE, AND SMOOTH. ANCHOR BOLTS MUST BE ACCURATELY PLACED AS SHOWN ON THIS DRAWING OR STEEL WILL NOT FIT.
10. ALL BOLTS TO BE SAE J429 GRADE 5 – BOLTS SHALL BE TIGHTENED IN ACCORDANCE WITH THE "SPECIFICATION FOR STRUCTURAL JOINTS USING ASTM A325 OR A490 BOLTS" SUBSECTION TITLED "TURN-OF-NUT TIGHTENING".
11. STRUCTURAL STEEL ANGLES AND WEB MEMBERS RODS ARE ASTM A572 GRADE 50, SIZES ARE NOTED ON SHOP DRAWINGS. SHOP DRAWINGS ARE NOT PROVIDED WITH THE ERECTION SET UNLESS REQUESTED.
12. WIND RODS ARE 1/2"ø ASTM A572 GRADE 50 (UNLESS NOTED OTHERWISE) WITH ENDS THREADED, DOUBLE WHERE NOTED ON PLANS/ELEVATIONS
13. MISCELLANEOUS PLATE ARE ASTM A36
14. WIND AND TRUSS CHORD BRACING ARE AN INTEGRAL PART OF THE STRUCTURAL SYSTEM AND MUST BE PROPERLY INSTALLED PRIOR TO ERECTION OF WALL AND ROOF SHEETS. REMOVAL OR ALTERATION OF WALL BRACING AND TRUSS CHORD BRACING WITHOUT PRIOR AUTHORIZATION IS PROHIBITED.
15. BUILDING SUBFRAMING:

    ALL LIGHT GAUGE FRAMING SHALL CONFORM TO THE REQUIREMENTS OF ASTM A653 GRADE 50 WITH A MINIMUM YIELD STRESS OF 50000 PSI.

    a. GIRTS: 3 5/8" x 1 5/8" x 20ga
    b. PURLINS: 6" x 1 5/8" x 20ga

BUILDING CODE	2012 IBC/ASCE 7-10
DESIGN LOADS	
ROOF LIVE	20 PSF Reduced Per ASCE 7-10 Sec 4.8
ROOF DEAD (COLLATERAL)	10 PSF (2 PSF + SELF WEIGHT + 5 PSF SOLAR)
ROOF SNOW LOAD	30 PSF
GROUND SNOW LOAD	43 PSF (UNHEATED)
WIND	
BASIC WIND SPEED	115 MPH (Vult)
EXPOSURE	C
RISK CATEGORY	II

	COLUMN GRID A		COLUMN GRID B	
	HORIZONTAL REACTION (lbs)	VERTICAL REACTION (lbs)	HORIZONTAL REACTION (lbs)	VERTICAL REACTION (lbs)
DEAD LOAD	70	2723	-70	2723
ROOF LIVE LOAD	57	3532	-57	3532
SNOW LOAD	-26	6338	26	6338
Wind 0° - Neg (MWFRS Load Case A)	-217	-4270	-903	-1987
Wind 0° - Pos (MWFRS Load Case A)	-699	-2320	-594	-1381
Wind 180° - Neg (MWFRS Load Case A)	861	-1857	240	-4287
Wind 180° - Pos (MWFRS Load Case A)	552	-1250	721	-2337
Wind 90° - Neg (MWFRS Load Case B)	783	-2907	-465	-1936
Wind 90° - Pos (MWFRS Load Case B)	679	-2146	-362	-1175
Wind 270° - Neg (MWFRS Load Case B)	465	-1936	-783	-2907
Wind 270° - Pos (MWFRS Load Case B)	362	-1175	-679	-2146
LIVE LOAD (ADDITIONAL)	0	0	0	0

Notes:
1. ALL REACTIONS ARE UNFACTORED
2. NO REACTIONS PROVIDED FOR ENDWALL COLUMNS, ENDWALLS ARE DESIGNED AS SLIP CONNECTIONS (NO GRAVITY LOADS) UNLESS NOTED OTHERWISE. HORIZONTAL REACTIONS FOR WIND LOADS ARE LESS THAN OR EQUAL TO MAIN FRAME COLUMNS
3. ALL FRAMES (INCLUDED TERMINAL BAYS) ARE DESIGNED FOR THE SAME LOADS UNLESS NOTED OTHERWISE. BUILDING IS DESIGNED TO BE EXPANDED IN THE FUTURE, UNLESS THE OWNER SPECIFICALLY REQUESTS AN ALTERNATE DESIGN; IN THAT CASE, LOADS CAN BE HALVED

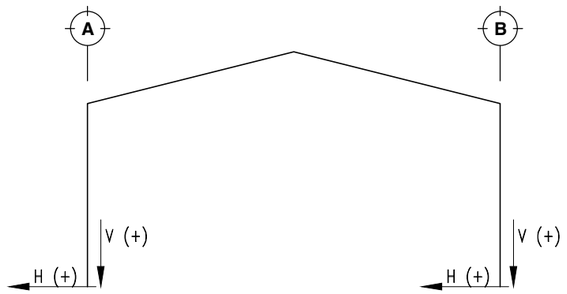

LOADING DIAGRAM

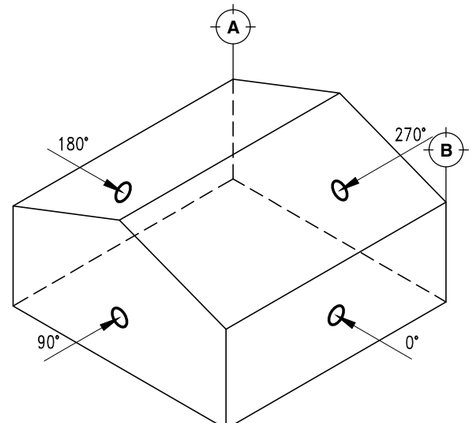

WIND DIAGRAM (ASCE MWFRS 28.4-1)

STATE OF MISSOURI
CHAD M. STREETER
NUMBER PE-2009010617
PROFESSIONAL ENGINEER
11/22/2019

Worldwide Steel Buildings
PO Box 588
Peculiar, MO 64078
Phone: 816.779.6441
Fax: 816.779.7361

VAN DEURZEN & ASSOCIATES, P.A.
11011 KING STREET,SUITE 130
OVERLAND PARK, KS 66210
Van Deurzen and Associates, P.A. © 2019

JOB NAME: STEPHEN GAARDER
WILDCAT GLADES FRIENDS GROUP
(WW JOB #59-60)
201 W RIVIERA

LOCATION: JOPLIN, MO

DESCRIPTION: BUILDING ERECTION DRAWINGS

DRAWN BY:	JWH
CHECKED BY:	CMS
SCALE:	AS NOTED
DATE:	11/22/2019
JOB NUMBER	
376-19132	
SHEET	
E0.0	0

EXACT LOCATION OF WINDOWS, OVERHEAD DOORS, AND WALK DOORS SHALL BE DETERMINED DURING BUILDING ERECTION. TRUSSES AND DIAGONAL BRACING SHALL NOT BE MOVED TO INSTALL WINDOWS, OVERHEAD DOORS, AND WALK DOORS.

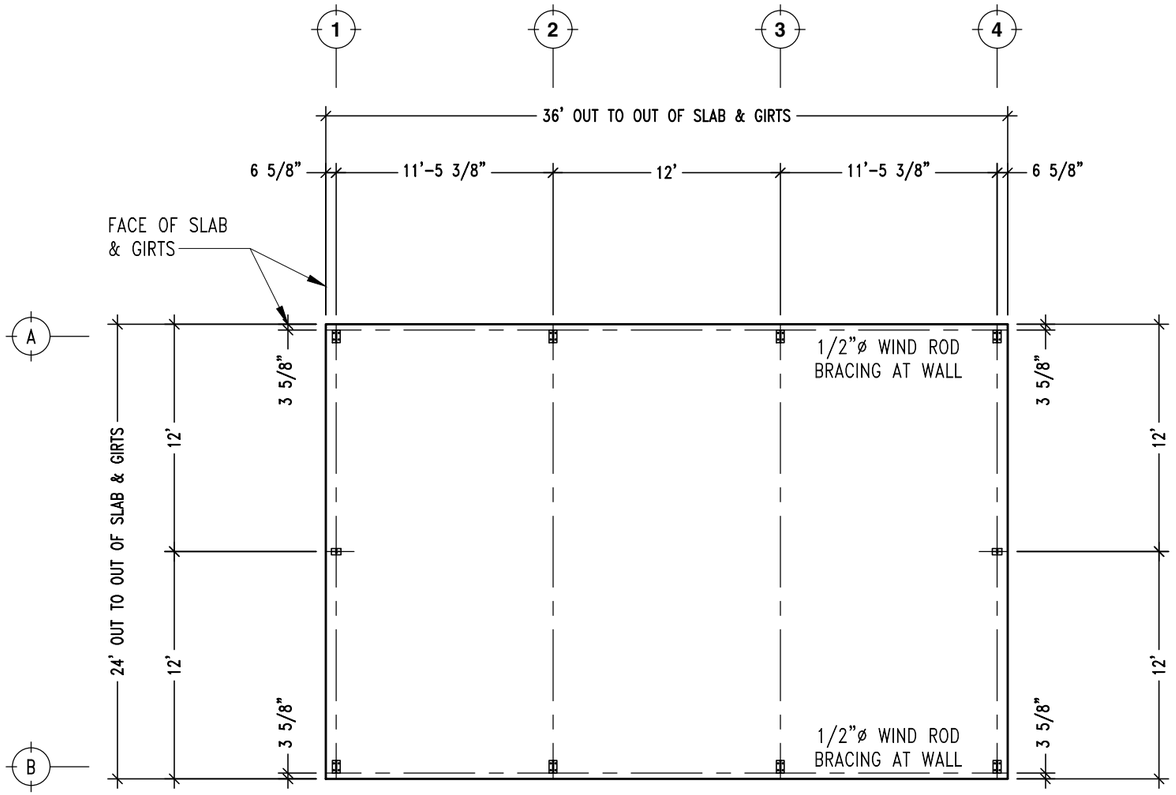

ANCHOR BOLT SETTING PLAN
SCALE: 1/8" = 1'-0"

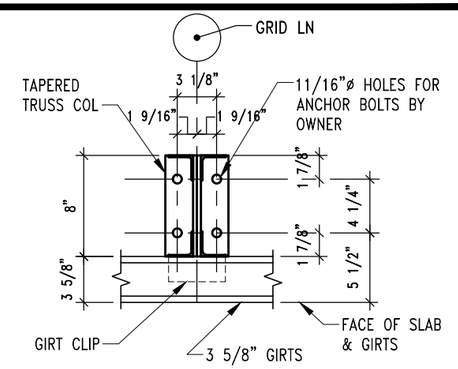

SIDEWALL ANCHOR BOLT
SCALE: 1"= 1'-0"

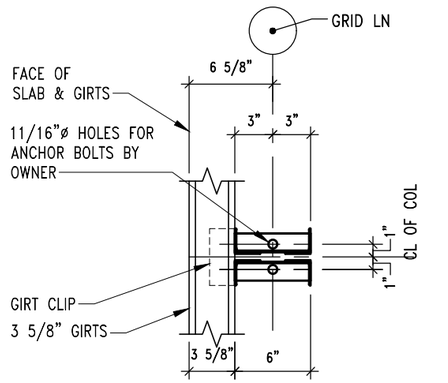

ENDWALL ANCHOR BOLT
SCALE: 1"= 1'-0"

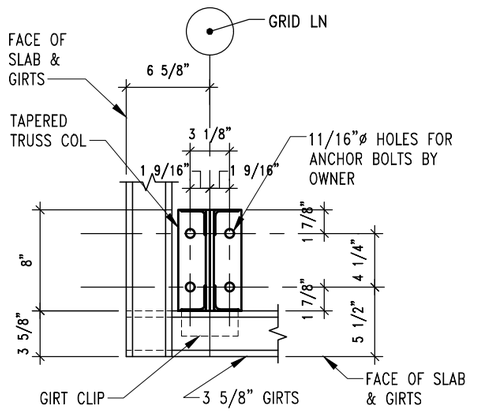

CORNER ANCHOR BOLT
SCALE: 1"= 1'-0"

STATE OF MISSOURI
CHAD M. STREETER
NUMBER PE-2005010617
PROFESSIONAL ENGINEER
11/22/2019

Worldwide Steel Buildings
PO Box 588
Peculiar, MO 64078
Phone: 816.779.7361
Fax: 816.779.6441

VAN DEURZEN & ASSOCIATES, P.A.
11011 KING STREET,SUITE 130
OVERLAND PARK, KS 66210

Von Deurzen and Associates, P.A. © 2019

JOB NAME: STEPHEN GAARDER
WILDCAT GLADES FRIENDS GROUP
(WW JOB #59-60)
201 W RIVIERA

LOCATION: JOPLIN, MO

DESCRIPTION: BUILDING ERECTION DRAWINGS

DRAWN BY:	JWH
CHECKED BY:	CMS
SCALE:	AS NOTED
DATE:	11/22/2019
JOB NUMBER	
376-19132	
SHEET	
E1.0	0

EXACT LOCATION OF WINDOWS, OVERHEAD DOORS, AND WALK DOORS SHALL BE DETERMINED DURING BUILDING ERECTION. TRUSSES AND DIAGONAL BRACING SHALL NOT BE MOVED TO INSTALL WINDOWS, OVERHEAD DOORS, AND WALK DOORS.

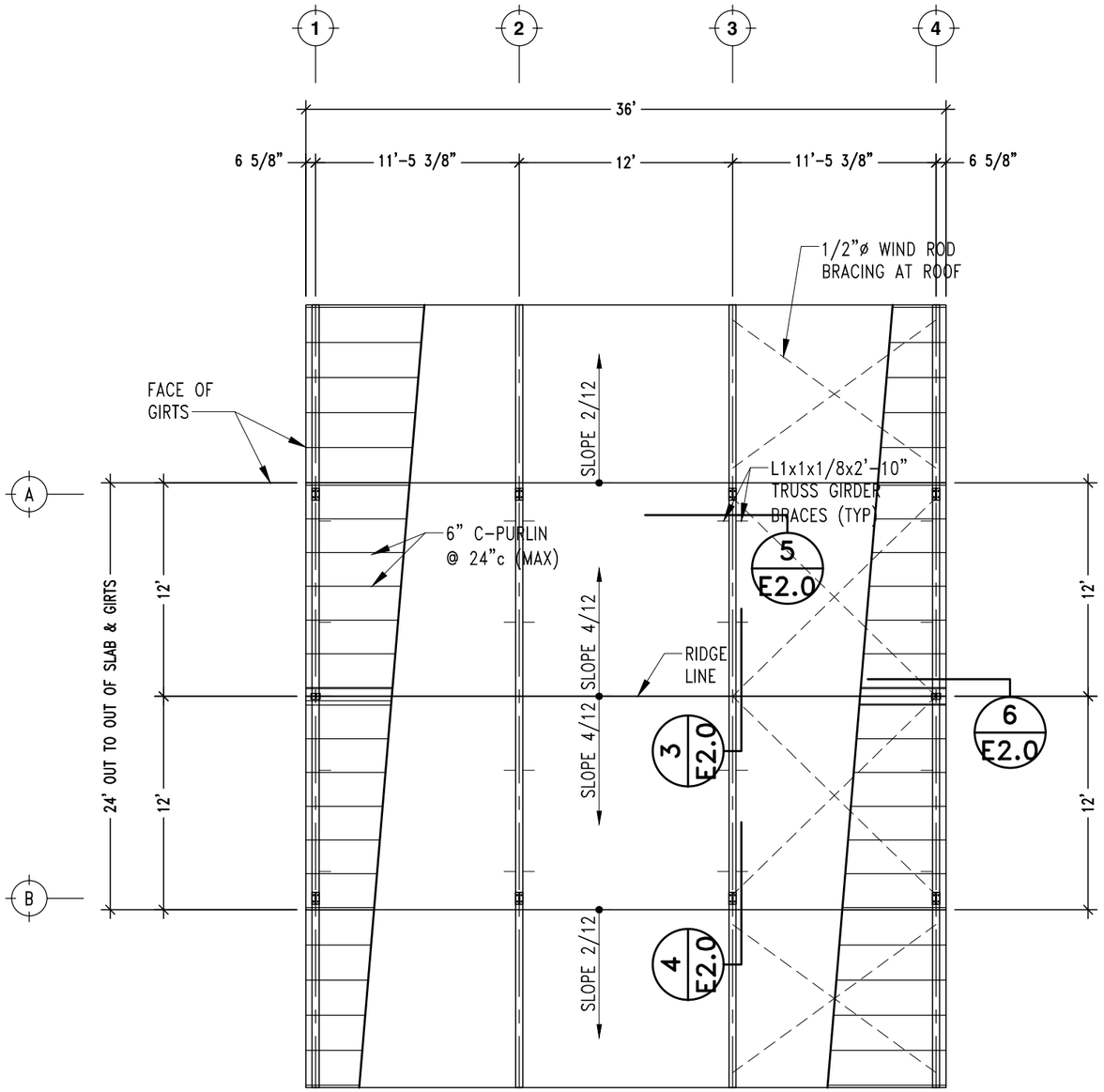

ROOF FRAMING PLAN
SCALE: 1/8" = 1'-0"

STATE OF MISSOURI
CHAD M. STREETER
NUMBER PE-2005010617
PROFESSIONAL ENGINEER
11/22/2019

Worldwide Steel Buildings
PO Box 588
Peculiar, MO 64078
Fax: 816.779.7361
Phone: 816.779.6441

VAN DEURZEN & ASSOCIATES, P.A.
11011 KING STREET,SUITE 130
OVERLAND PARK, KS 66210
Van Deurzen and Associates, P.A.

© 2019

JOB NAME: STEPHEN GAARDER
WILDCAT GLADES FRIENDS GROUP
(WW JOB #59-60)
201 W RIVIERA

LOCATION: JOPLIN, MO

DESCRIPTION: BUILDING ERECTION DRAWINGS

DRAWN BY:	JWH
CHECKED BY:	CMS
SCALE:	AS NOTED
DATE:	11/22/2019
JOB NUMBER	
376-19132	
SHEET	
E1.1	0

EXACT LOCATION OF WINDOWS, OVERHEAD DOORS, AND WALK DOORS SHALL BE DETERMINED DURING BUILDING ERECTION. TRUSSES AND DIAGONAL BRACING SHALL NOT BE MOVED TO INSTALL WINDOWS, OVERHEAD DOORS, AND WALK DOORS.

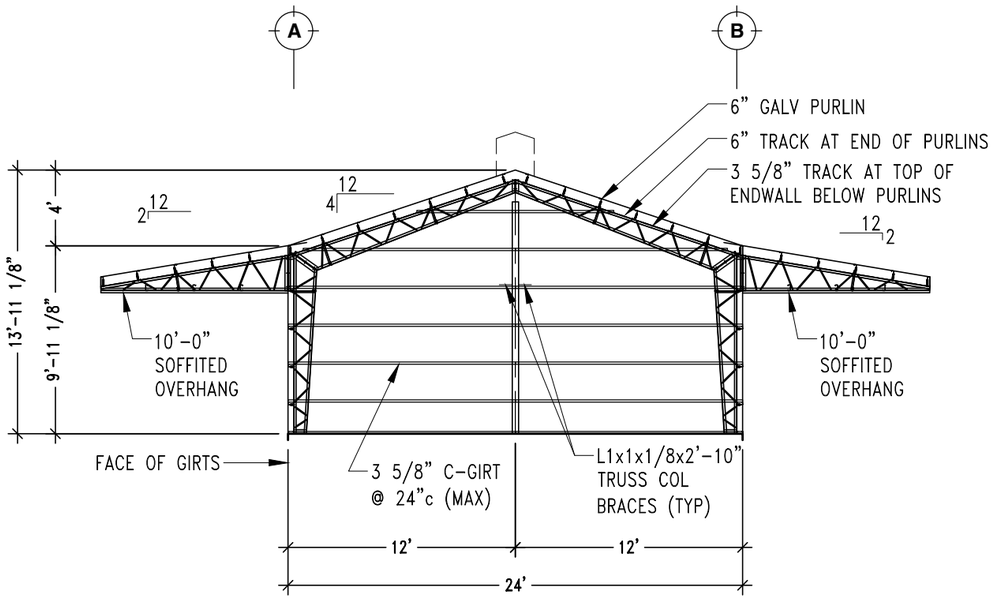

FRONT ELEVATION
SCALE: 1/8" = 1'-0"

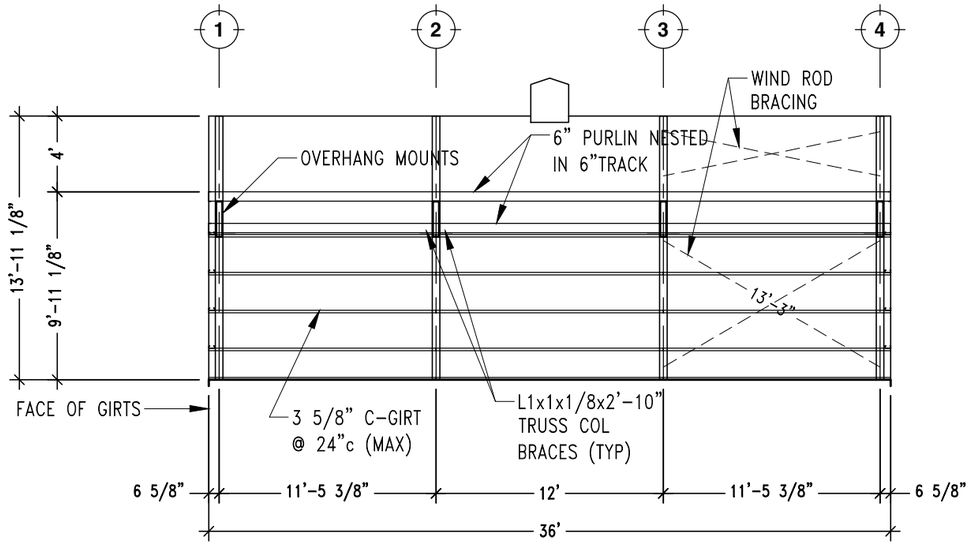

RIGHT ELEVATION
SCALE: 1/8" = 1'-0"

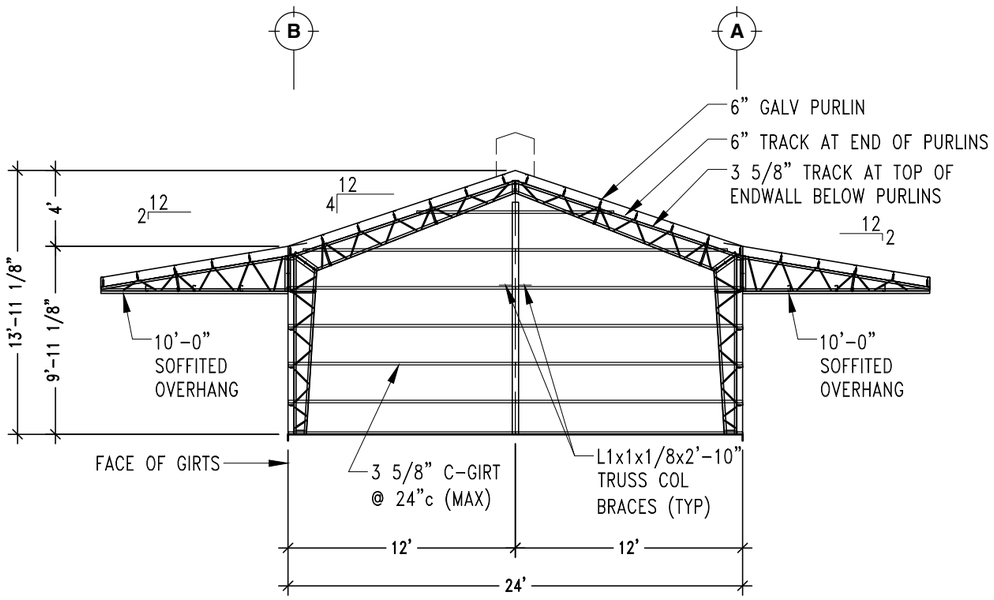

REAR ELEVATION
SCALE: 1/8" = 1'-0"

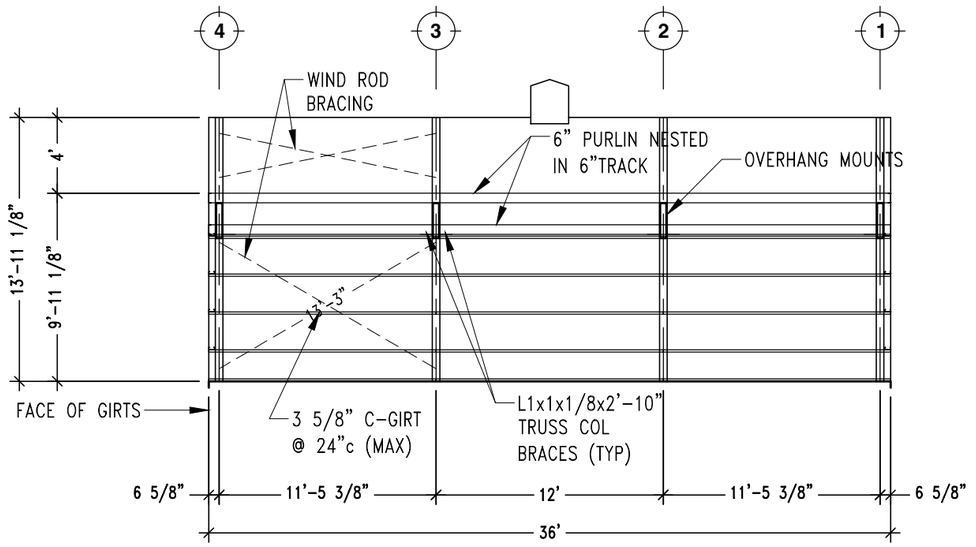

LEFT ELEVATION
SCALE: 1/8" = 1'-0"

STATE OF MISSOURI
CHAD M. STREETER
NUMBER PE-2005010617
PROFESSIONAL ENGINEER
11/22/2019

Worldwide Steel Buildings
PO Box 588
Peculiar, MO 64078
Fax: 816.779.7361
Phone: 816.779.6441

VAN DEURZEN & ASSOCIATES, P.A.
11011 KING STREET,SUITE 130
OVERLAND PARK, KS 66210
Van Deurzen and Associates, P.A. © 2019

JOB NAME: STEPHEN GAARDER
WILDCAT GLADES FRIENDS GROUP
(WW JOB #59-60)
201 W RIVIERA

LOCATION: JOPLIN, MO

DESCRIPTION: BUILDING ERECTION DRAWINGS

DRAWN BY:	JWH
CHECKED BY:	CMS
SCALE:	AS NOTED
DATE:	11/22/2019
JOB NUMBER	
376-19132	
SHEET	
E1.2	0

EXACT LOCATION OF WINDOWS, OVERHEAD DOORS, AND WALK DOORS SHALL BE DETERMINED DURING BUILDING ERECTION. TRUSSES AND DIAGONAL BRACING SHALL NOT BE MOVED TO INSTALL WINDOWS, OVERHEAD DOORS, AND WALK DOORS.

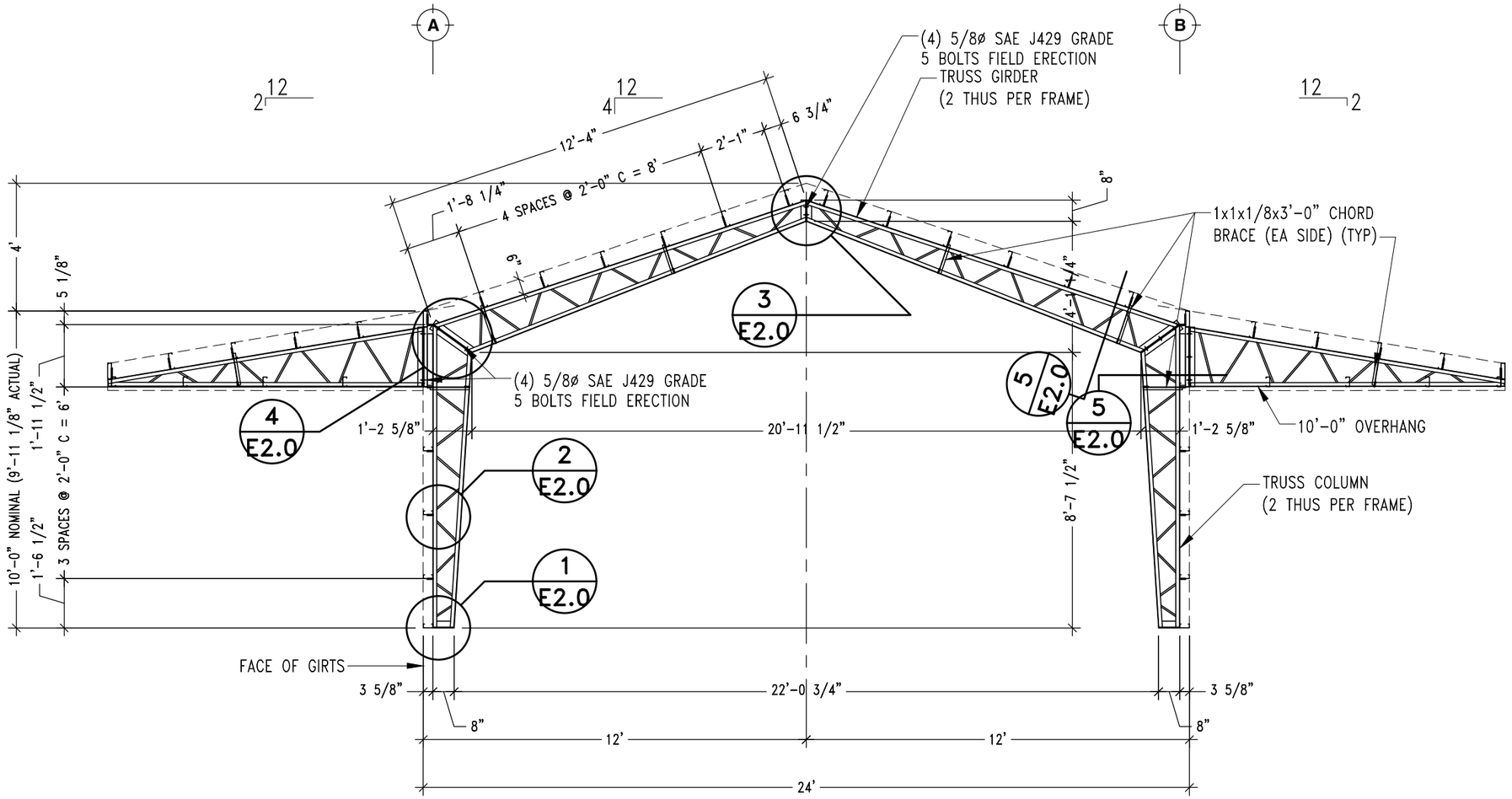

TYPICAL BUILDING SECTION

SCALE: 1/4" = 1'-0"

STATE OF MISSOURI
CHAD M. STREETER
NUMBER PE-2009010617
PROFESSIONAL ENGINEER
11/22/2019

Worldwide Steel Buildings
PO Box 588
Peculiar, MO 64078
Fax: 816.779.7361
Phone: 816.779.6441

VAN DEURZEN & ASSOCIATES, P.A.
11011 KING STREET,SUITE 130
OVERLAND PARK, KS 66210
Von Deurzen and Associates, P.A.

© 2019

JOB NAME: STEPHEN GAARDER
WILDCAT GLADES FRIENDS GROUP
(WW JOB #59-60)
201 W RIVIERA
LOCATION: JOPLIN, MO
DESCRIPTION: BUILDING ERECTION DRAWINGS

DRAWN BY:	JWH
CHECKED BY:	CMS
SCALE:	AS NOTED
DATE:	11/22/2019
JOB NUMBER	
376-19132	
SHEET	
E1.3	0

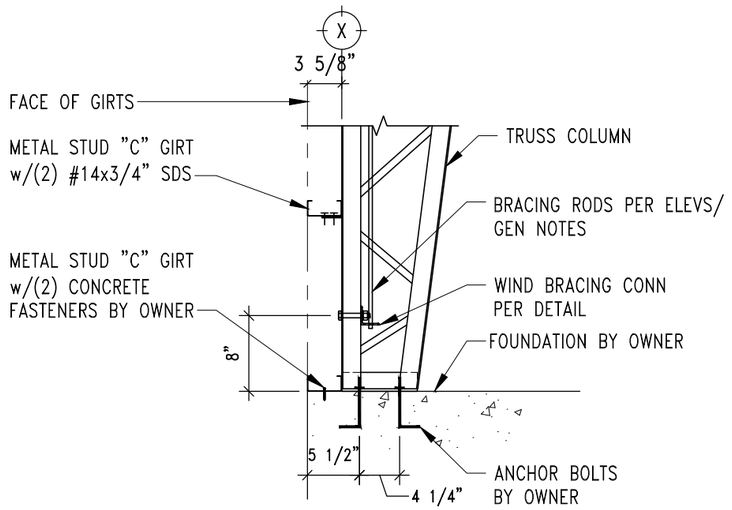

COLUMN BASE DETAIL — 1 / E2.0
SCALE: 3/4" = 1'-0"

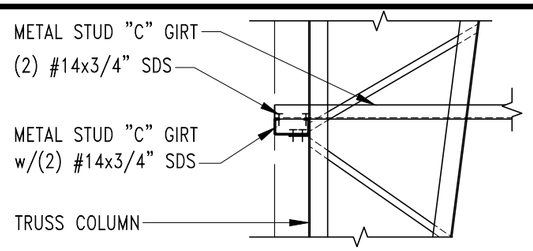

GIRT CORNER CONN. — 2a / E2.0
SCALE: 3/4" = 1'-0"

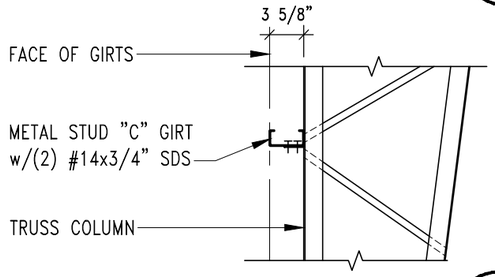

GIRT CONN. DETAIL — 2 / E2.0
SCALE: 3/4" = 1'-0"

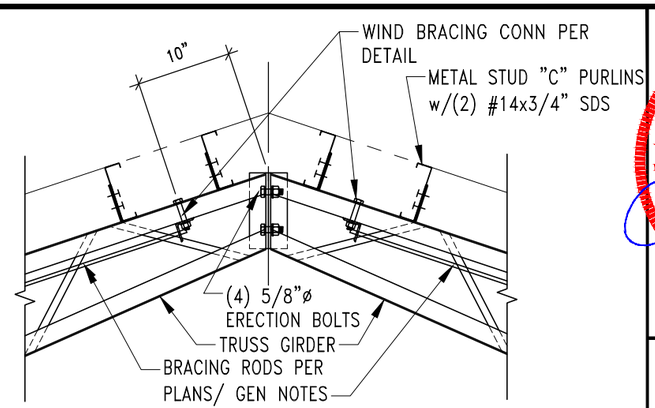

RIDGE DETAIL — 3 / E2.0
SCALE: 3/4" = 1'-0"

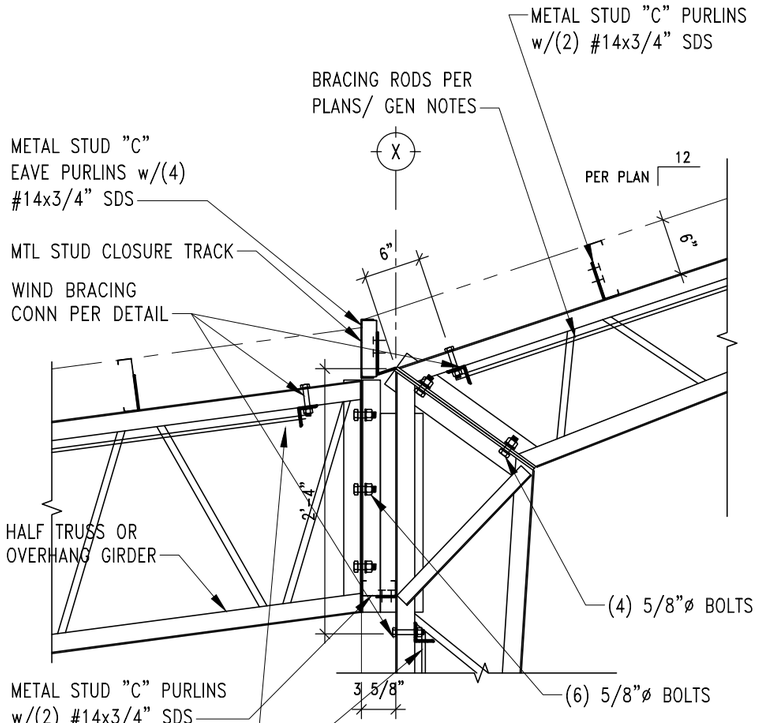

KNEE DETAIL — 4 / E2.0
SCALE: 3/4" = 1'-0"

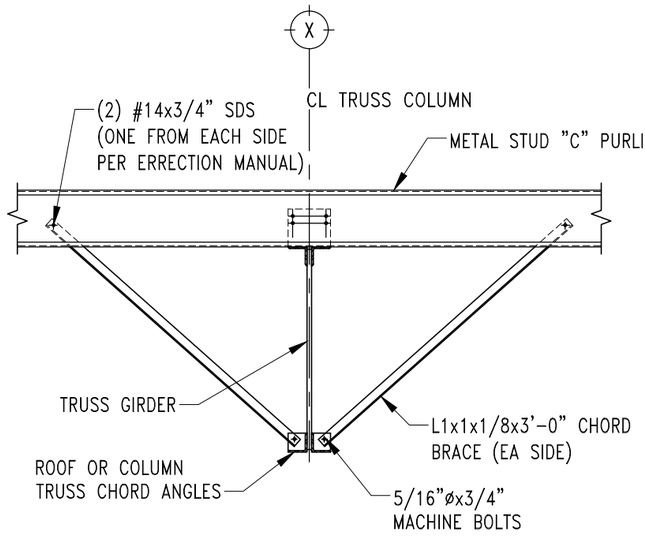

NOTE: WHERE BRACES ARE CROWDED BY A DOOR, FIELD CUT THE ANGLE (& DRILL HOLE) TO PLACE THE END AS CLOSE TO THE DOOR JAMB AS POSSIBLE

TRUSS CHORD BRACE — 5 / E2.0
SCALE: 3/4" = 1'-0"

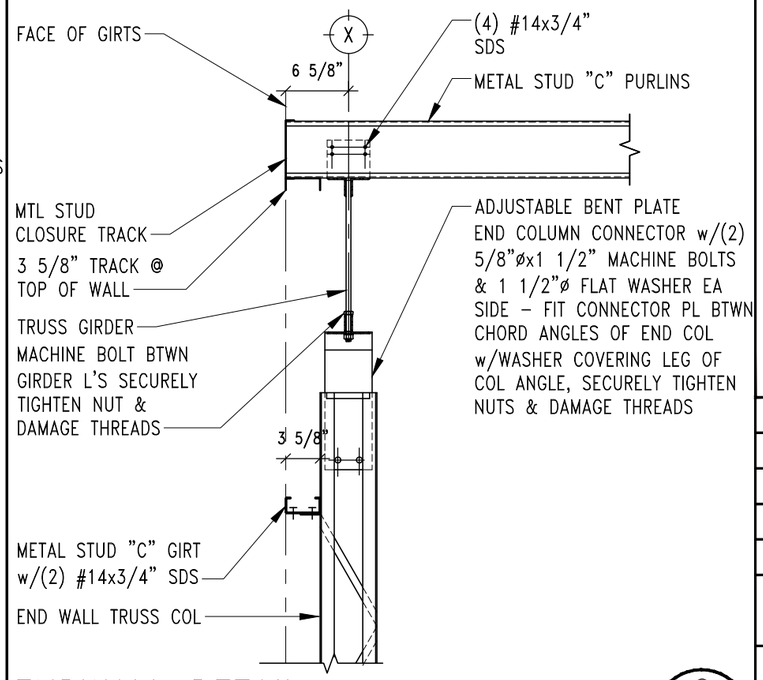

ENDWALL DETAIL — 6 / E2.0
SCALE: 3/4" = 1'-0"

STATE OF MISSOURI
CHAD M. STREETER
NUMBER PE-2005010617
PROFESSIONAL ENGINEER
11/22/2019

Worldwide Steel Buildings
PO Box 588
Peculiar, MO 64078
Fax: 816.779.7361
Phone: 816.779.6441

VAN DEURZEN & ASSOCIATES, P.A.
11011 KING STREET,SUITE 130
OVERLAND PARK, KS 66210
Van Deurzen and Associates, P.A.

© 2019

JOB NAME: STEPHEN GAARDER
WILDCAT GLADES FRIENDS GROUP
(WW JOB #59-60)
201 W RIVIERA

LOCATION: JOPLIN, MO

DESCRIPTION: BUILDING ERECTION DRAWINGS

DRAWN BY:	JWH
CHECKED BY:	CMS
SCALE:	AS NOTED
DATE:	11/22/2019
JOB NUMBER	
376-19132	
SHEET	
E2.0	⚠0

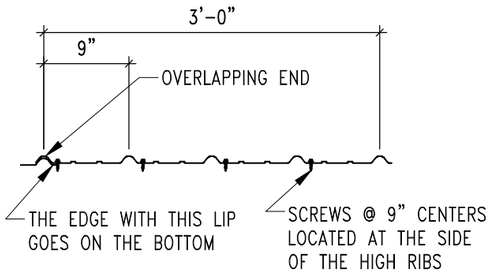

29 GAUGE (80 KSI) RIBBED PANEL at ROOF AND WALLS – ATTACH WITH #12 x 1 1/4" METAL TO METAL SELF DRILLING SCREWS WITH RUBBER WASHERS
ALTERNATE: IF USING WOOD SUBFRAMING ATTACH WITH #9 x 1 1/2" WOOD SCREWS

WALL / ROOF PANEL ATTACHMENT

SCALE: 3/4"= 1'-0"

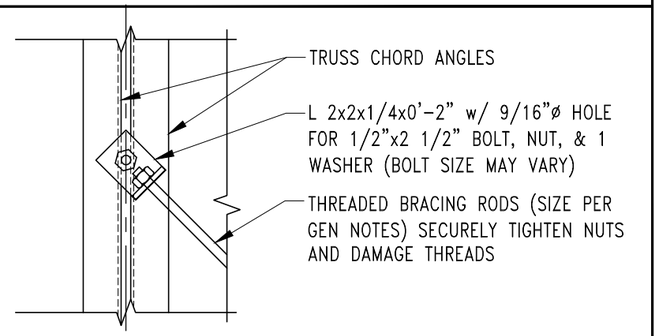

WIND BRACING CONNECTION (SINGLE)

SCALE: 2"= 1'-0"

STATE OF MISSOURI
CHAD M. STREETER
NUMBER PE-2005010617
PROFESSIONAL ENGINEER
11/22/2019

Worldwide Steel Buildings
PO Box 588
Peculiar, MO 64078
Phone: 816.779.7361
Fax: 816.779.6441

VAN DEURZEN & ASSOCIATES, P.A.
11011 KING STREET,SUITE 130
OVERLAND PARK, KS 66210
Van Deurzen and Associates, P.A. © 2019

JOB NAME: STEPHEN GAARDER
WILDCAT GLADES FRIENDS GROUP
(WW JOB #59-60)
201 W RIVIERA

LOCATION: JOPLIN, MO

DESCRIPTION: BUILDING ERECTION DRAWINGS

DRAWN BY:	JWH
CHECKED BY:	CMS
SCALE:	AS NOTED
DATE:	11/22/2019
JOB NUMBER	
376-19132	
SHEET	
E2.1	0