JOPLIN CITY COUNCIL
REGULAR MEETING AGENDA
MONDAY, FEBRUARY 3, 2020
5th FLOOR COUNCIL CHAMBERS
602 S. MAIN ST. JOPLIN MO
6:00 PM

1. **Call To Order**
   Invocation
   Pledge of Allegiance of the United States of America

2. **Roll Call**

3. **Presentations**

   1. Police Department Promotions And Swearing-In Ceremony
      - Sloan Rowland promoted to Chief of Police from Assistant Chief of Police
      - Brian Lewis to be sworn in as Assistant Chief of Police
      - William Davis promoted to Captain from Sergeant
      - Jason Stump promoted to Sergeant from Corporal

   2. Joplin Area Chamber Of Commerce Economic Update/Toby Teeter, President

   3. Vision Joplin 2022 - Mid-Five-Year Update

4. **Finalization Of Consent Agenda**

5. **Reports And Communications**

6. **Citizen Requests And Petitions**

7. **Public Hearings**

   1. Public Hearing Procedures

      Documents:

      PUBLIC HEARING PROC.PDF

   2. COUNCIL BILL NO. 2020-250
      AN ORDINANCE amending Ordinance No. 2004-256, passed by the Council of the City of
      Joplin, Missouri, November 15, 2004, by removing from District R-1 and including in District C-3 property as described below and located 4240 Highway 43, City of Joplin, Newton County, Missouri.

      Documents:

      CB 2020-250 MINUTES.PDF
      CB 2020-250 STAFF REPORT.PDF
      CB 2020-250 SUMMARY.PDF
      CB 2020-250.PDF

   3. COUNCIL BILL NO. 2020-251
      AN ORDINANCE amending Ordinance No. 2004-256, passed by the Council of the City of Joplin, Missouri, November 15, 2004, by removing from District C-1 and including in District C-3 property as described below and located 1860 W 20th Street, City of Joplin, Jasper County, Missouri.

Documents:

CB 2020-251 MINUTES.PDF
CB 2020-251 STAFF REPORT.PDF
CB 2020-251 SUMMARY.PDF
CB 2020-251.PDF

8. Consent Agenda

1. Minutes Of The January 21, 2020 City Council Meeting

   Documents:

   MINUTES -JAN. 21.PDF

2. COUNCIL BILL NO. 2020-602
   AN ORDINANCE authorizing the City of Joplin to enter into a first amendment to memorandum of understanding with the Wildcat Glades Friends Group, a Missouri Nonprofit Corporation ("Friends Group") for the purpose of establishing responsibilities in maintaining and operating Wildcat Park; and authorizing the Interim City Manager to execute said memorandum of understanding by and on behalf of the City of Joplin.

   Documents:

   CB2020-602.PDF

9. Resolutions

1. RESOLUTION NO. 2020-002
   A RESOLUTION designating the "gap cost" for the purchase of prior service credit for those Tier II public safety employees voluntarily migrating to the LAGERS retirement system as an employer contribution.

   Documents:

   RESOLUTION 2020-002 SUMMARY DESIGNATION OF GAP COST PAYMENT AS EMPLOYER CONTRIBUTION.PDF
   RESOLUTION 2020-002 DESIGNATING GAP PAYMENT FOR MIGRATING TIER II EMPLOYEES AS EMPLOYER CONTRIBUTION.PDF
   RESOLUTION 2020-002 IRS RULING.PDF

10. Ordinances - Emergency

1. COUNCIL BILL 2020-105
   AN ORDINANCE approving an agreement and a work authorization with Allgeier, Martin and Associates, Inc. in the not to exceed amount of One Hundred Fifty-Six Thousand Eight Hundred and No/100 Dollars ($156,800.00) for the Baker's Branch Interceptor Replacement Project; and authorizing the City Manager or his designee to execute the same by and on behalf of the City of Joplin; and containing an emergency clause.

   Documents:

   CB 2020-105 SUMMARY SHEET - BAKERS BRANCH INTERCEPTOR REPLACEMENT.PDF
   CB 2020-105 WA AMA-OC-20-001 BAKERSBRANCH 01-23-2020 COMPLETE.PDF

CB 2020-105 EXHIBIT MAP.PDF
CB 2020-105 COUNCIL BILL - BAKERS BRANCH INTERCEPTOR REPLACEMENT.PDF

2. COUNCIL BILL 2020-106
AN ORDINANCE approving a construction agreement with Blevins Asphalt Construction, Co., Inc. for street milling and overlaying in the not to exceed amount Nine Hundred Thirty-Two Thousand Two Hundred Fifty-Six and 07/100 Dollars, ($932,256.07) for the 2020 Mill and Overlay project and containing an emergency clause.

Documents:

SUMMARY SHEET 2020-106.PDF
JOPLIN CONSTRUCTION CONTRACT FORM - LOCAL FUNDING - 2020 (1).PDF
BID TAB FORM.PDF
MILL AND OVERLAY 2020 AREA MAP.PDF
PARKING LOTS AREA MAP.PDF
CB 2020-106 MILL AND OVERLAY 2020.PDF

3. COUNCIL BILL 2020-107
AN ORDINANCE approving a construction agreement with Vance Brothers Inc. for street microsurfacing in the not to exceed amount Seven Hundred Eighteen Thousand Nine Hundred Ninety and 14/100 Dollars ($718,990.14) for the 2020 Microsurfacing Project and containing an emergency clause.

Documents:

SUMMARY SHEET 2020-107.PDF
MICROSUFACING 2020 AREA MAP.PDF
JOPLIN CONSTRUCTION CONTRACT FORM - LOCAL FUNDING - 2020.PDF
CB 2020-107 MICROSURFACING 2020.PDF
BID TAB FORM.PDF

4. COUNCIL BILL NO. 2020-400
AN ORDINANCE authorizing the City of Joplin to execute Work Authorization #6 to the Master Services Agreement for Professional Administrative Consulting Services with Guidehouse LLC (GH) formerly known as PricewaterhouseCoopers Public Sector LLP (PwC) to provide implementation and administrative activities, not to exceed Six Hundred Fifteen Thousand, Seven Hundred and Twenty-Four Dollars ($615,724) and authorizing the Interim City Manager or his designee to execute said Agreement; and containing an emergency clause.

Documents:

CB 2020-400 SUMMARY.PDF
CB 2020-400 WORK AUTHORIZATION 6_.PDF
CB 2020-400.PDF

5. COUNCIL BILL NO. 2020-500
AN ORDINANCE amending the Annual Budget of the City of Joplin for the Fiscal Year 2018-2019 as adopted by Ordinance 2018-145 on October 15, 2018, to adjust appropriations and containing an emergency clause.

Documents:

CB 2020-500 SUMMARY BUDGET AMENDMENT FY 2019.PDF
CB 2020-500 BUDGET AMENDMENT ORDINANCE FOR FY 2019.PDF
CB 2020-500 SCHEDULE A 2019 BUDGET AMENDMENT FEB 3 2020.PDF

11. **Ordinances - First Reading**

12. **Ordinances - Second Reading And Third Reading**

13. **Unfinished Business**

14. **New Business**

    1. PIO News And Announcements

    2. Vote To Go Into Closed Session, Which Shall Pertain To The Hiring, Firing, Disciplining, Or Promotion Of An Employee Or Particular Employees Of A Governmental Body Involving Personal Information; As Set Forth In Section 610.021(3) RSMo, As Amended, 2019. This Meeting, Record, And Vote To Be Closed To The Extent Provided By Law. The City Council Shall Adjourn At The End Of The Session.

Anyone wishing to address the Council should step to the podium and state his/her name and address. If the matter is not a Public Hearing, a request to speak to the Council should be prepared prior to the meeting. Speaking time will be limited to five (5) minutes.

Sound enhancement units are available for hearing impaired customers who provide a form of identification as security, which will be returned to the customer upon the return of the unit.

Those in need of disability-related auxiliary aids or services should contact the City Clerk's office at (417) 624-0820, ext. 220 no later than 48 hours prior to the meeting.

Notice posted at ____ p.m. on this the __ day of ____, ____. (RSMo 610.020)

PUBLIC HEARING PROCEDURES

Persons wishing to testify before the City Council are requested to follow these rules:

1. Proponents of the issue will be asked to present their information, then the opponents will be asked to testify and then rebuttal testimony may be allowed by the Council.

2. Approach the podium and state your name and address clearly for the record.

3. Please give your testimony as briefly and completely as possible. By the rules of the City Council you have five (5) minutes within which to give your testimony. Please follow the clock on the dais in front of you. You must complete your testimony within the 5-minute time limit.

4. Please do not repeat testimony that has been given previously. We want you to state your facts but limit your information to only new information.

5. Everyone is invited to speak, however, if you have a spokesperson please allow them to speak without interrupting for applause or other demonstrations.

6. When the Public Hearing is closed by the Mayor, no additional testimony is allowed except when invited by the Mayor or other members of the Council.

7. Remember that this is a Public Hearing and all sides have a right to give testimony. Please respect their right to do so.

8. The City Council of the City of Joplin through this introduction, accepts into evidence the 2018 Comprehensive Plan, the Zoning Code of the City of Joplin, the Subdivision Regulations of the City of Joplin, the Telecommunications Ordinance, and the Stormwater Management Regulations of the City of Joplin being Appendices 29-A, 29-B, 29-D, 29-E and 29-F of the Joplin Municipal Code. Report of the Planning and Zoning Commission, recommendations of the City's staff, and other written documentation presented as that information applies to each public hearing.

Thank you for your consideration and understanding.

CB 2020-250

Case 001-20: 4240 Hwy 43. - A request to remove from District R-1 (Single-family Residential) and include in District C-3 (Commercial) for the purpose of the operation of a truck stop – Truckstop Distributors Inc.

Jerald Norton, Olsson Inc., 702 S. Main Street, Joplin, MO, representing Truckstop Distributors, Inc. This property, Petro Truck Stop, was voluntarily annexed into the City of Joplin in 2007 and the city policy was for the property to be R-1 (Single Family Residential) and it has not been rezoned. In a meeting with city staff, they recommended that the property be rezoned as C-3 (Commercial District).

Mr. Ramsour asked if there was anyone that would like to speak in favor of this case? There was not. Mr. Ramsour asked if there was anyone who would like to speak in opposition to this case? There was not.

MR. DERMOTT MOVED, SECONDED BY MR. EASTMAN FOR CASE 001-20 BE FORWARDED TO THE CITY COUNCIL WITH RECOMMENDATIONFOR APPROVAL. MOTION CARRIED, WITH MR. RAMSOUR, MR. DERMOTT, MRS. BRUCKNER-SEARS,

Z&P Meeting: January 13, 2020
City Council Meeting: February 3, 2020

STAFF PLANNING REPORT
Rezoning

CASE 001-20 A request to rezone from R-1 (Single-family Residential) to C-3 (Neighborhood Commercial)

LOCATION 4240 Hwy 43

APPLICANT Truckstop Distributors, Inc.

EXISTING CONDITIONS

Zoning	Land Use	Property Size
R-1	Truckstop	69.1 Acres

SITE CONTEXT

	North	East	South	West
Existing Zoning	R-1/I-44	R-1	R-1	R-1
Land Use	Vehicle/Equipment Sales	Fuel Sales/Firework Sales	Truckstop	Vacant

FUTURE LAND USE

Joplin's Future Land Use Map shows this property is appropriate for Future Retail Commercial

TRANSPORTATION

Streets with access	Classification	Right-of-way width
S. Hwy 43	Arterial	120'
W. Cedar Dr.	Local	40'

UTILITIES

Utilities do not need to be extended to this property. Utilities are currently in place.

FLOOD PLAIN

A portion of this property in the Southwest corner is in the flood plain.

STAFF ANALYSIS

CONSISTENT WITH DEVELOPMENT POLICIES OF THE COMPREHENSIVE PLAN?

The request is consistent with the comprehensive plan. The future land use map shows this property, as well as all of those around this interchange with I-44 as Future Retail Commercial.

THE SUITABILITY OF THE SUBJECT PROPERTY FOR THE USES TO WHICH IT HAS BEEN RESTRICTED

The current zoning of R-1 is consistent with nearby parcels but is not suitable for this area. This property was annexed into Joplin in 2006, and many of the surrounding properties followed suit in the following years. All of these properties are currently zoned R-1 as that is the default zoning given to newly annexed properties. The future land use map does indicate that this property be used for retail commercial, and it is being used as such.

THE EXTENT THAT THE ZONING CHANGE WILL DETRIMENTALLY AFFECT NEARBY PROPERTY

The change in zoning to C-3 will not be detrimental to the nearby property, most if not all of the surrounding properties are of similar uses that would be permitted in the C-3 zoning district.

DISCUSSION

The applicant is requesting the rezoning in order to move forward on plans to renovate and remodel the site. The need for a building permit triggered this requirement to rezone. This property was annexed into Joplin in 2006, and still carries the default designation of R-1. A change to C-3 would be consistent with the uses around this interchange, and compatible with the Future Land Use Map.

Staff recommends approval of Case 001-20.

ATTACHMENTS

- Application
- Map

RECEIVED
12-6-19

REZONING APPLICATION FORM

Return Form to:
Planning / Community Development Specialist
Joplin City Hall
602 South Main Street
Joplin, Missouri 64801
417-624-0820 Ext. 511
FAX 417-625-4738

For Office Use Only

Case No.: 001-20
Filing Fee: $500.00
Date Advertised: 12-29-19
Date Notices Sent 12-30-19
Public Hearing Date: 1-13-20

APPLICANT: Truckstop Distributors, Inc. PHONE: 563-468-5228
ADDRESS: P.O. Box 639, Walcott, Iowa ZIP: 52773

OWNER: Truckstop Distributors, Inc. PHONE: 563-468-5228
ADDRESS: P.O. Box 639, Walcott, Iowa ZIP: 52773

LOCATION/ADDRESS OF PROPERTY: I44 & Mo. Hwy. 43 Interchange
4240 Hwy. 43, Joplin, Mo. 46804

Present Zoning R1 Requested Zoning: C3 Acreage: 69.1 Acres
Present Use of Property: Joplin Petro Truckstop, Restaurant, Motel

SURROUNDING LAND USE AND ZONING:

	Land Use	Zoning
North	L&E Martin Oil Company (North of I-44)	R1
South	Pilot Travel Center	R1
East	Gas Station and KOA Campground	R1
West	Residential	Unzoned; outside city limits

Character of the Neighborhood: This area is a high density commercial use which caters to interstate traffic

RELATIONSHIP TO EXISTING ZONING PATTERN:

1. Would proposed change create a small, isolated district unrelated to surrounding districts?
   Yes, it is the intent of the city to rezone adjacent parcels in the future
2. Are there substantial reasons why the property cannot be used in accord with existing zoning? Yes
   If yes, explain: Non-Conforming Use under current R1 Zoning

CONFORMANCE WITH COMPREHENSIVE PLAN:

1. Consistent with Development Policies? Yes
2. Consistent with Future Land Use Map? Yes

TRAFFIC CONDITIONS:

1. Street(s) with Access to Property: Mo. Hwy 43
2. Classification of Street(s):
   Arterial Mo. Hwy 43 Collector _____ Local _____
3. Right-of-Way Width: Varies
4. Will turning movements caused by the proposed use create an undue traffic hazard?
   No, Truckstop entrance is signalized.

IS PLATTING OR REPLATTING REQUIRED IN ORDER TO PROVIDE FOR:

1. Appropriately Sized Lots? No
2. Properly Sized Street Right-of-Way? No
3. Drainage Easements? No
4. Utility Easements:
   - Electricity? No
   - Gas? No
   - Sewers? No
   - Water? No
5. Additional Comments: _____

UNIQUE CHARACTERISTIC OF PROPERTY AND/OR ADDITIONAL COMMENT:

Petro and the adjacent parcels voluntarily annexed into the City of Joplin. Under city policy the parcels were annexed under R1 zoning. The city is now rezoning to address non-conforming use.

THE FOLLOWING MUST ACCOMPANY YOUR APPLICATION:

1. One copy of a legal description of the property proposed to be rezoned from a deed or certified survey.
2. One copy of a statement describing the reasoning for the rezoning, the impact of the proposed change, including any traffic conditions that may result; any danger from fire hazards; how the proposed change may affect the character of the surrounding properties; and how the proposed change will benefit the City of Joplin.
3. Owner Affidavit, if applicant applying for the rezoning is not the owner of the property be rezoned

SIGNATURE: Olsson, Inc. Jerald Norton DATE: 12/6/2019

EMAIL: jnorton@olsson.com

TITLE: Olsson, Inc. Senior Engineer

Case 001-20: 4240 Hwy 43 - Rezone

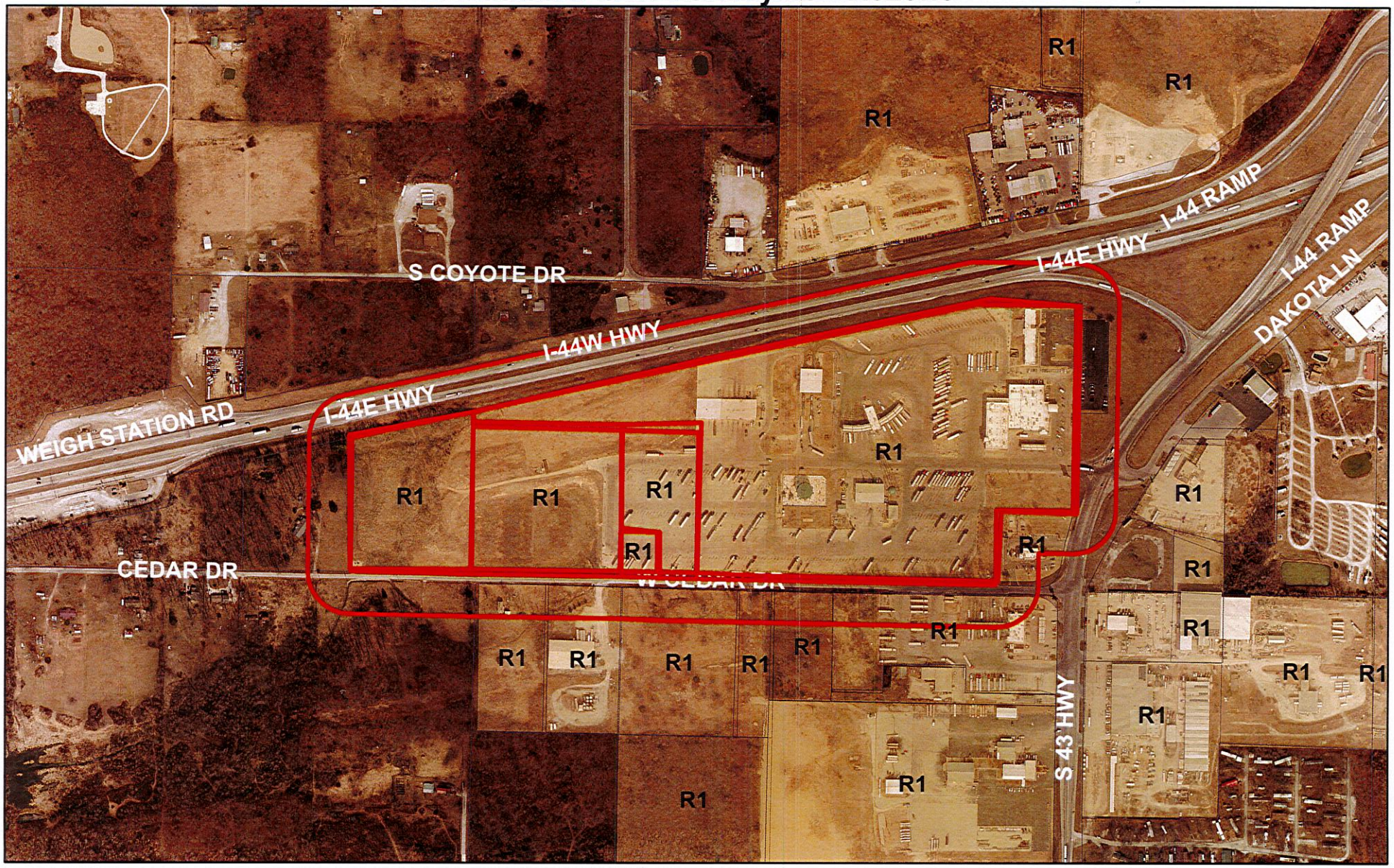

Case 001-20: 4240 Hwy 43. - A request to remove from District R-1 (Single-family Residential) and include in C-3 (Commercial) for the purpose of operating a truck stop – Truckstop Distributors Inc.

N

0 250 500 1,000 1,500 2,000 Feet

CITY OF JOPLIN
COUNCIL AGENDA ITEM

ITEM:
CB 2020-250-Rezone to C-3 (Commercial)

MEETING DATE:
February 3, 2020

ORIGINATING DEPARTMENT:
Planning, Development and Neighborhood Services

REVIEWED BY:
Director of Planning, Development & Neighborhood Services-Troy Bolander, Director of Finance-Leslie Haase, City Attorney- Peter Edwards, Interim City Manager- Daniel Pekarek.

SUMMARY REQUEST:
Case 001-20: 4240 Hwy 43. - A request to remove from District R-1 (Single-family Residential) and include in District C-3 (Commercial) for the purpose of the continued operation of a truck stop – Truckstop Distributors Inc.

BACKGROUND:
This property was annexed into the City of Joplin in 2006 and Truckstop Distributors, Inc is requesting the rezoning in order to move forward on plans to renovate and remodel the site. The need for a building permit triggered this requirement to rezone. A change to C-3 would be consistent with the uses around this interchange, and compatible with the Future Land Use Map.

PLANNING & ZONING COMMISSION TESTIMONY:
Jerald Norton, Olsson Inc., 702 S. Main Street, Joplin, MO, representing Truckstop Distributors, Inc. This property, Petro Truck Stop, was voluntarily annexed into the City of Joplin in 2007 and the city policy was for the property to be R-1 (Single Family Residential) and it has not been rezoned. In a meeting with city staff, they recommended that the property be rezoned as C-3 (Commercial District).

PUBLIC COMMENT:
None.

FUNDING SOURCE:
These payments are included in the FY 2019-2020 budget of the Community Planning Fund.

RECOMMENDATIONS:
Planning & Zoning Commission recommend approval for Case 001-20 (6 in Favor, 0 Nays, 1 Absent)
Staff recommends approval of Case 001-20.

ATTACHMENTS
CB 2020-250, Staff Planning Report, P&Z Commission Minutes

P & Z Case 001-20
Truckstop Distributions Inc.
(P & Z Recommended Approval)

COUNCIL BILL NO. 2020-250 ORDINANCE NO.

AN ORDINANCE amending Ordinance No. 2004-256, passed by the Council of the City of Joplin, Missouri, November 15, 2004, by removing from District R-1 and including in District C-3 property as described below and located 4240 Highway 43, City of Joplin, Newton County, Missouri.

NOW, THEREFORE, BE IT ORDAINED BY THE COUNCIL OF THE CITY OF JOPLIN, MISSOURI, as follows:

Section 1. Having referred the subject matter of this ordinance to the City Planning and Zoning Commission and having given at least fifteen days' notice of time and place of hearing on same by publication in the Joplin Globe, Ordinance No. 2004-256 is hereby amended by the following described property and including in District C-3:

Part of the North half of Section 5 and part of the North half of Section 4, T26, R33, Newton County Missouri, being more particularly described as follows: commencing at the East Quarter Corner of Section 5, T26, R33, Newton County Missouri, thence N00°59'36"E 330.03 feet to the point of beginning; thence N89°00'24"W 330.00 feet; thence S00°59'36"W 252.86 feet to a point on the North right-of-way of Cedar Drive; thence along the North right of way of Cedar Drive the following courses; N89°00'24"W 970.81 feet; thence N88°57'41"W 327.10 feet; thence N88°56'24"W 1,502.21 feet; thence leaving the North right-of-way of Cedar Drive; thence N01°16'09"E 601.03 feet to a point on the South right-of-way of US Interstate 44; thence along the South right-of-way of US Interstate 44 the following courses; thence N77°50'58"E 875.53 feet; thence N77°51'22"E 1258.73 feet; thence N7758'38"E 660.28 feet; thence S89°00'24"E 426.68 feet; thence S65°22'01"E 131.18 feet; thence S89°09'50"E 48.00 feet; thence S58°25'37"E 136.14 feet to a point on the West right-of-way of Mo. State Hwy. 43; thence along the West right-of-way of Mo. State Hwy. 43 the following courses; thence S01°00"14"W 155.00 feet; thence S35°44'18"W 221.69 feet; thence N89°09'49"W 159.00 feet; thence N89°00'24"W 20.00 feet; thence S00°59'36"W 447.00 feet to the point of beginning. Containing 69.1 acres more or less, less any taken for right-of-way purposes, more generally known as 4240 Hwy. 43.

Section 2. That the City Clerk is hereby ordered to file this ordinance with the Zoning District Map maintained in her office and to note the changes herein provided thereon.

PASSED BY THE COUNCIL OF THE CITY OF JOPLIN, MISSOURI, this the _____ day of_____, 2020, by a vote of _____.

_____
Gary L. Shaw, Mayor

ATTEST:

_____

Barbara J. Gollhofer, City Clerk

APPROVED AS TO FORM:

_____

Peter C. Edwards, City Attorney

CB 2020-251

Case 002-20: 1860 W 20th St. – A request to remove from District C-1 (Neighborhood Commercial) and include in District C-3 (Commercial) for the purpose of vehicle sales – Driven

Paul Goodman, Driven, 1860 W. 20th Street, Joplin, MO. He is a franchise dealer of LaFond motorcycles, and they are inside the building not outside. This property is currently C-O (Non-Retail Commercial District) and we would like to rezone to C-3 (Commercial). There are no repairs, just sales only. The neighbors had stated to me that this property use to be Triumph Motorcycle sales.

Mr. Eastman wanted to know if when the property was purchased did he know it was not zoned properly?

Mr. Goodman stated that he did not. He was told it was zoned Commercial by his agent. We have had the cars there since purchase of the property and the neighbors were pleased with the operation.

Mr. Ramsour asked if the Commissioners had any questions for Mr. Parker. They did not.

Mr. Ramsour asked if there anyone in favor of this request? There was not. Is there was anyone against this request? There was not.

MRS. BRUCKNER-SEARS MOVED, SECONDED BY MRS. KOELKEBECK FOR CASE 002-20 BE FORWARDED TO THE CITY COUNCIL WITH RECOMMENDATIONFOR APPROVAL. MOTION CARRIED, WITH MR. RAMSOUR, MR. DERMOTT, MRS. BRUCKNER-SEARS, MRS. KOELKEBECK, MRS. STEELE, AND MR. EASTMAN VOTING "AYE". (6 IN FAVOR, 0 NAYS, 1 ABSENT).

Z&P Meeting: January 13, 2020
City Council Meeting: February 3, 2020

STAFF PLANNING REPORT
Rezoning

CASE 002-20 A request to rezone from C-1 (Neighborhood Commercial) to C-3 (Neighborhood Commercial)

LOCATION 1860 W 20th St.

APPLICANT Driven

EXISTING CONDITIONS

Zoning	Land Use	Property Size
C-1	Auto Sales	Approximately 0.47 Acres

SITE CONTEXT

	North	East	South	West
Existing Zoning	M-2	R-1	R-1	C-1
Land Use	Vehicle/Equipment Storage	Single-family Residential	Single-family Residential	Janitorial Service Provider Office

FUTURE LAND USE

Joplin's Future Land Use Map shows this property is appropriate for Future Retail Commercial

TRANSPORTATION

Streets with access	Classification	Right-of-way width
W. 20th St.	Arterial	70'
S. Tyler Ave.	Local	80'

UTILITIES

Utilities do not need to be extended to this property. Utilities are currently in place.

FLOOD PLAIN

This property is not in the flood plain.

STAFF ANALYSIS

CONSISTENT WITH DEVELOPMENT POLICIES OF THE COMPREHENSIVE PLAN?

The request is consistent with the comprehensive plan. The future land use map shows this property, as well as the adjacent properties along the corridor as Future Retail Commercial. This property is located in the 20th Street Development Corridor. The requested zoning is shown to be appropriate for this portion of the corridor based on the Future Land Use Map.

THE SUITABILITY OF THE SUBJECT PROPERTY FOR THE USES TO WHICH IT HAS BEEN RESTRICTED

The current zoning of C-1 is consistent with nearby parcels and is suitable for this area. This property is a corner lot with frontage on an arterial street. Neighborhood Commercial uses would be appropriate for this location.

THE EXTENT THAT THE ZONING CHANGE WILL DETRIMENTALLY AFFECT NEARBY PROPERTY

The change in zoning to C-3 may affect the R-1 properties near this lot. C-3 is the most intense commercial district. Rezoning may create a significant conflict with the nearby R-1 properties.

DISCUSSION

The applicant is requesting the rezoning in order to begin operation of a used car dealership. The Vehicle Sales use is only permitted in C-3 and M-1 zoning districts. While the increase in intensity to C-3 does conflict with the nearby R-1 lots, the Future Land Use map does show the corridor to be Future Retail Commercial. In addition, across the street as well as only a few lots to the West are more intense zoning districts. The 20th Street corridor designation, as well as the Zoning Code's buffer requirements, does provide mitigation opportunities to lessen the conflict between the uses.

Staff recommends approval of Case 002-20.

ATTACHMENTS

- Application
- Map

REZONING APPLICATION FORM

Return Form to:
Planning / Community Development Specialist
Joplin City Hall
602 South Main Street
Joplin, Missouri 64801
417-624-0820 Ext. 511
FAX 417-625-4738

For Office Use Only

Case No.: 002-20
Filing Fee: $500.00
Date Advertised: 12-29-19
Date Notices Sent 12-30-19
Public Hearing Date: 1-13-20

APPLICANT: Driven PHONE: 417-726-5054
ADDRESS: 1860 W. 20th Joplin MO, 64804 ZIP:

OWNER: Susan Garrett + Paul Goodman PHONE: 620-704-7213
ADDRESS: 1860 W. 20th Joplin MO, 64804 ZIP:

LOCATION/ADDRESS OF PROPERTY: 1860 W. 20th Joplin, MO, 64804

Present Zoning C-1 Requested Zoning: ~~C-2~~ C-3 Acreage:
Present Use of Property: Motorcycle + Auto Sales Retail Sales NO Repairs

SURROUNDING LAND USE AND ZONING:

	Land Use	Zoning
North	Mandalors	Commercial
South	Transportation complex	Commercial
East	Gilton	Industrial - Comm
West		

Character of the Neighborhood: Commercial mixed - Retail Uses

RELATIONSHIP TO EXISTING ZONING PATTERN:

1. Would proposed change create a small, isolated district unrelated to surrounding districts?

2. Are there substantial reasons why the property cannot be used in accord with existing zoning? * Retail Uses
   If yes, explain: New Motorcycle Sales + Auto Sales

CONFORMANCE WITH COMPREHENSIVE PLAN:

1. Consistent with Development Policies?

2. Consistent with Future Land Use Map?

TRAFFIC CONDITIONS:

1. Street(s) with Access to Property: _____
2. Classification of Street(s):
   Arterial _____ Collector _____ Local _____
3. Right-of-Way Width: _____
4. Will turning movements caused by the proposed use create an undue traffic hazard?
   _____

IS PLATTING OR REPLATTING REQUIRED IN ORDER TO PROVIDE FOR:

1. Appropriately Sized Lots? _____
2. Properly Sized Street Right-of-Way? _____
3. Drainage Easements? _____
4. Utility Easements:
   Electricity? _____
   Gas? _____
   Sewers? _____
   Water? _____
5. Additional Comments: It's zoned for Retail uses we keep and sell all the new motorcycles Indoor and display

UNIQUE CHARACTERISTIC OF PROPERTY AND/OR ADDITIONAL COMMENT:

We keep it very clean and Attractive

* Also we have no sidewalks or curbs on property

THE FOLLOWING MUST ACCOMPANY YOUR APPLICATION:

1. One copy of a legal description of the property proposed to be rezoned from a deed or certified survey.
2. One copy of a statement describing the reasoning for the rezoning, the impact of the proposed change, including any traffic conditions that may result; any danger from fire hazards; how the proposed change may affect the character of the surrounding properties; and how the proposed change will benefit the City of Joplin.
3. Owner Affidavit, if applicant applying for the rezoning is not the owner of the property be rezoned

SIGNATURE: _____ DATE: 12-23-2019

EMAIL: drivem1860@gmail.com

TITLE: Agent Owner

Case 002-20: 1860 W 20th St. - Rezone

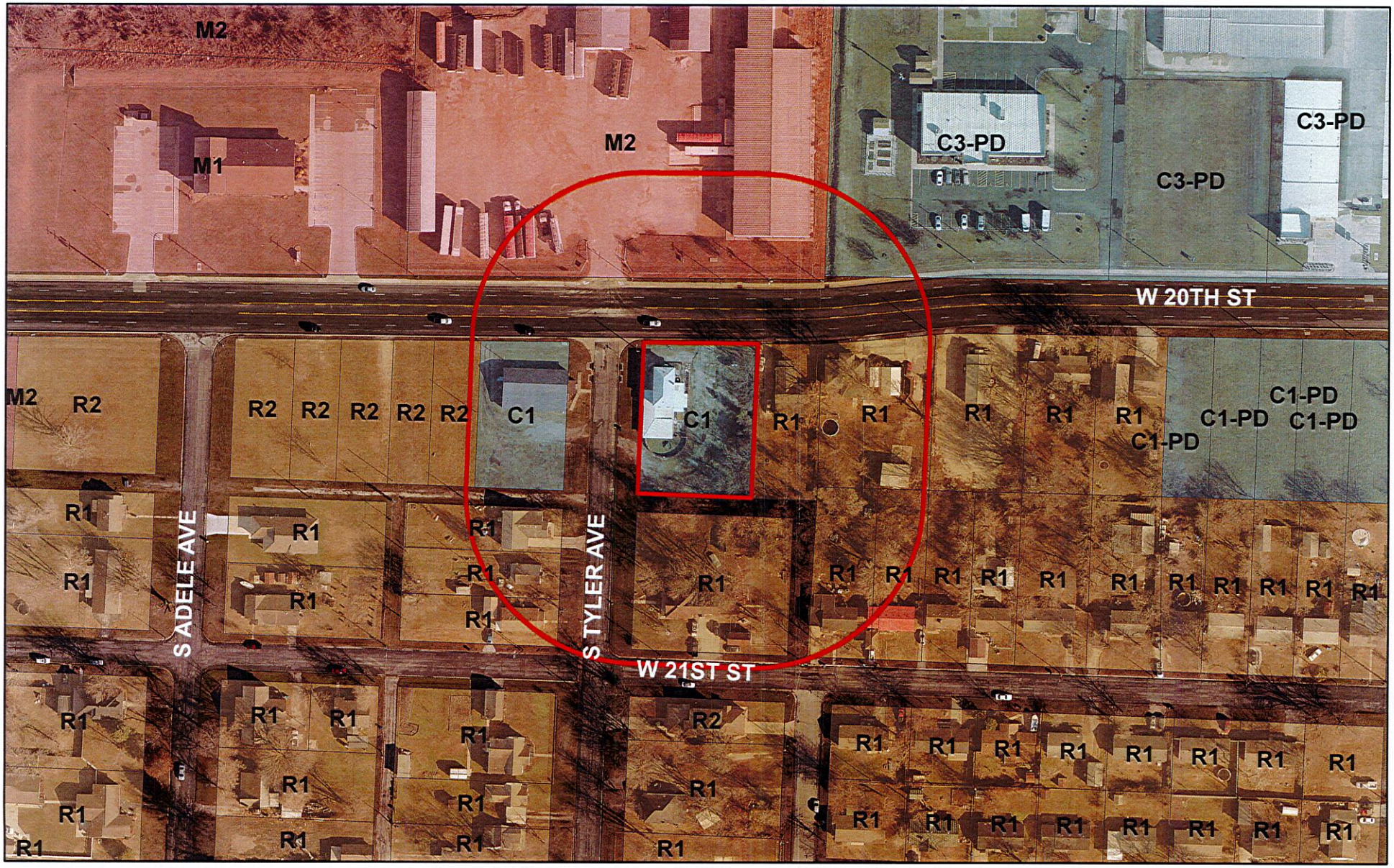
M2
M1
M2
C3-PD
C3-PD
C3-PD
W 20TH ST
M2
R2
R2
R2
R2
R2
R2
C1
C1
R1
R1
R1
R1
R1
C1-PD
C1-PD
C1-PD
C1-PD
R1
R1
R1
R1
R1
R1
R1
R1
R1
R1
R1
R1
R1
R1
R1
R1
R1
R1
R1
R1
S ADELE AVE
S TYLER AVE
W 21ST ST
R1
R1
R1
R1
R1
R1
R1
R1
R1
R1
R1
R1
R1
R1
R1
R1
R1
R1
R1

CITY OF JOPLIN
COUNCIL AGENDA ITEM

ITEM:
CB 2020-251-Rezone to C-3 (Commercial)

MEETING DATE:
February 3, 2020

ORIGINATING DEPARTMENT:
Planning, Development and Neighborhood Services

REVIEWED BY:
Director of Planning, Development & Neighborhood Services-Troy Bolander, Director of Finance-Leslie Haase, City Attorney- Peter Edwards, Interim City Manager- Daniel Pekarek.

SUMMARY REQUEST:
Case 002-20: 1860 W 20th St. – A request to remove from District C-1 (Neighborhood Commercial) and include in District C-3 (Commercial) for the purpose of vehicle sales – Driven

BACKGROUND:
The applicant is requesting the rezoning in order to begin operation of a used car dealership. The Vehicle Sales use is only permitted in C-3 and M-1 zoning districts. While the increase in intensity to C-3 does conflict with the nearby R-1 lots, the Future Land Use map does show the corridor to be Future Retail Commercial. The 20th Street corridor designation, as well as the Zoning Code's buffer requirements, does provide mitigation opportunities to lessen the conflict between the uses.

PLANNING & ZONING COMMISSION TESTIMONY:
Paul Goodman, Driven, 1860 W. 20th Street, Joplin, MO. He is a franchise dealer of LaFond motorcycles, and they are inside the building not outside. This property is currently C-O (Non-Retail Commercial District) and he would like to rezone to C-3 (Commercial). There are no repairs, just sales only. The neighbors had stated to me that this property use to be Triumph Motorcycle sales.

Mr. Eastman wanted to know if when the property was purchased did he know it was not zoned properly?

Mr. Goodman stated that he did not. He was told it was zoned Commercial. We have had the cars there since purchase of the property and the neighbors were pleased with the operation.

PUBLIC COMMENT:
None.

FUNDING SOURCE:
These payments are included in the FY 2019-2020 budget of the Community Planning Fund.

RECOMMENDATIONS:
Planning & Zoning Commission recommend approval for Case 002-20 (6 in Favor, 0 Nays, 1 Absent)
Staff recommends approval of Case 002-20.

ATTACHMENTS
CB 2020-251, Staff Planning Report, P&Z Commission Minutes

P & Z Case 002-20
Driven
(P & Z Recommended Approval)

COUNCIL BILL NO. 2020-251 ORDINANCE NO.

AN ORDINANCE amending Ordinance No. 2004-256, passed by the Council of the City of Joplin, Missouri, November 15, 2004, by removing from District C-1 and including in District C-3 property as described below and located 1860 W 20th Street, City of Joplin, Jasper County, Missouri.

NOW, THEREFORE, BE IT ORDAINED BY THE COUNCIL OF THE CITY OF JOPLIN, MISSOURI, as follows:

Section 1. Having referred the subject matter of this ordinance to the City Planning and Zoning Commission and having given at least fifteen days' notice of time and place of hearing on same by publication in the Joplin Globe, Ordinance No. 2004-256 is hereby amended by the following described property and including in District C-3:

All of lots numbered 2 and 3 in Bartlett's First Addition to the City of Joplin, Jasper County, Missouri, according to the recorded Plat thereof.

Section 2. That the City Clerk is hereby ordered to file this ordinance with the Zoning District Map maintained in her office and to note the changes herein provided thereon.

PASSED BY THE COUNCIL OF THE CITY OF JOPLIN, MISSOURI, this the _____ day of_____, 2020, by a vote of _____.

_____
Gary L. Shaw, Mayor

ATTEST:

_____
Barbara J. Gollhofer, City Clerk

APPROVED AS TO FORM:

_____
Peter C. Edwards, City Attorney

JOPLIN CITY COUNCIL
JANUARY 21, 2020 MEETING MINUTES

CALL TO ORDER
The regular meeting of the Joplin City Council was called to order at 6:00 p.m.by Mayor Gary Shaw.

INVOCATION was read by City Clerk Barbara Gollhofer.

PLEDGE OF ALLEGIANCE to the United States of America was led by Mayor Shaw.

ROLL CALL
Answering Roll Call were Council Members: Taylor Brown, Keenan Cortez, Doug Lawson, Anthony Monteleone, Diane Reid Adams, Gary Shaw, Ryan Stanley and Phil Stinnett. Also, in attendance were Interim City Manager Dan Pekarek and City Attorney Peter Edwards. Absent: Melodee Colbert-Kean. Motion by Mr. Cortez, second by Mr. Lawson to excuse Mrs. Colbert-Kean. Voting in favor were Council Members: Brown, Cortez, Lawson, Monteleone, Reid Adams, Shaw, Stanley and Stinnett, 8. Nays: 0.

PRESENTATIONS
Faron Haase, Joplin High School Student Council president, presented an update to City Council on Joplin High School events.

Mayor Gary Shaw presented a Retirement Resolution to recognize Mary Anne Phillips, Recycling Coordinator, for 22 years of service.

FINALIZATION OF CONSENT AGENDA
There being no further business to come before the Council, the Consent Agenda was finalized.

REPORTS AND COMMUNICATIONS

CITIZEN REQUESTS AND PETITIONS

PUBLIC HEARINGS

CONSENT AGENDA
Motion by Mr. Stinnett, second by Mr. Cortez to approve the Consent Agenda. Voting in favor were Council Members: Brown, , Cortez, Lawson, Monteleone, Reid Adams, Shaw, Stanley, and Stinnett, 8 Nays:0. Absent: Colbert-Kean 1.

Minutes of the January 6, 2020 City Council Meeting

COUNCIL BILL NO. 2019-285 - AN ORDINANCE providing to vacate approximately 90 feet of a 10-foot-wide utility easement and approximately 185 feet of a 10-foot-wide utility easement running East/West located in the 2300 block of the East side of S. Wisconsin Ave. **Ordinance No. 2020-004**

COUNCIL BILL NO.2019-286 - AN ORDINANCE providing for the vacation of approximately 440 feet of a 20-foot-wide utility easement, and 115 feet of a 15-foot-wide storm sewer and public utility easement located in the 1700 block of the South side of W 26th Street in the City of Joplin, Jasper County, Missouri. **Ordinance No. 2020-005**

COUNCIL BILL NO. 2019-288 - AN ORDINANCE providing the vacation for a public street located 150 feet of S. McCoy Ave., approximately 150 feet South of the intersection of S. McCoy Ave. and W. 4th St. in the City of Joplin, Jasper County, Missouri. **Ordinance No. 2020-006**

COUNCIL BILL NO. 2019-289 - AN ORDINANCE establishing grades and accepting the Final Plat of Hal's Subdivision located at NW Corner of W 26th St. & S. Roosevelt Ave. in the City of Joplin, Jasper County, Missouri. **Ordinance No. 2020-007**

COUNCIL BILL NO. 2020-600 – AN ORDINANCE authorizing the City of Joplin, Missouri ("City"), a municipal corporation, to enter into an agreement with Joplin Schools ("District"), a political subdivision and public school district of the State of Missouri, for the purpose of providing a school resource officer program between City and District; and authorizing the Interim City Manager to execute said agreements by and on behalf of the City of Joplin. **Ordinance No. 2020-008**

RESOLUTIONS

ORDINANCES – EMERGENCY

Mr. Stanley introduced Council Bill No. 2020-103 - an ordinance approving the City of Joplin to enter into a Cost Share Agreement with the Missouri Highways and Transportation Commission; authorizing the City Manager or his designee to execute the same by and on behalf of the City of Joplin; and containing an emergency clause. Motion by Mr. Stanley, second by Mr. Lawson that Council Bill No. 2020-103 be approved on an emergency basis. Voting in favor were Council Members: Brown, Cortez, Lawson, Monteleone, Reid Adams, Shaw, Stanley and Stinnett, 8. Nays: 0. Absent: Colbert-Kean, 1. The Council Bill was declared adopted and entitled **Ordinance No. 2020-009**

Mr. Stinnett introduced Council Bill No. 2020-104 - an ordinance approving the City of Joplin to enter into a construction agreement with B-3 Contractors, LLC, in the amount of Two Hundred Seventeen Thousand Six Hundred Fifty-Seven and 35/100 dollars ($217,657.35) for construction of the NID IV Sidewalk 2019 Project; and authorizing the City Manager or his designee to execute the same by and on behalf of the City of Joplin; and containing an emergency clause. Motion by Mr. Stinnett, second by Mr. Cortez that Council Bill No. 2020-104 be approved on an emergency basis. Voting in favor were Council Members: Brown, Cortez, Lawson, Monteleone, Reid Adams, Shaw, Stanley and Stinnett, 8. Nays: 0. Absent: Colbert-Kean, 1. The Council Bill was declared adopted and entitled **Ordinance No. 2020-010**

Dr. Reid Adams introduced Council Bill No. 2020-601 - an ordinance authorizing the City of Joplin to enter into an agreement with Mid America Fire Apparatus Inc., a Missouri Corporation, for the purpose of purchasing one (1) new and unused E-One Typhoon HP75 with rear-mount aerial, for the not to exceed price of Nine-Hundred Eight Thousand Five-Hundred Eighty-Eight Dollars and No Cents ($908,588.00); authorizing the Interim City Manager or his designee to execute the same by and on behalf of the City of Joplin; amending the Annual Budget of the City of Joplin for the Fiscal Year 2019-2020 as adopted by Ordinance 2019-166 on October 21, 2019; and, containing an emergency clause. Motion by Dr. Reid Adams, second by Mr. Lawson that Council Bill No. 2020-601 be approved on an emergency basis. Voting in favor were Council Members: Brown, Cortez, Lawson, Monteleone, Reid Adams, Shaw, Stanley and Stinnett, 8. Nays: 0. Absent: Colbert-Kean, 1. The Council Bill was declared adopted and entitled **Ordinance No. 2020-011**

ORDINANCES – FIRST READING

Mr. Lawson introduced Council Bill No. 2020-602 - an ordinance authorizing the City of Joplin to enter into a first amendment to memorandum of understanding with the Wildcat Glades Friends Group, a Missouri Nonprofit Corporation ("Friends Group") for the purpose of establishing responsibilities in maintaining and operating Wildcat Park; and authorizing the Interim City Manager to execute said memorandum of understanding by and on behalf of the City of Joplin. Motion by Mr. Lawson, second by Mr. Stanley to approve Council Bill No. 2020-602 on First Reading and advance to Second and Third Reading. Voting in favor were Council Members: Brown, Cortez, Lawson, Monteleone, Reid Adams, Shaw, Stanley and Stinnett, 8. Nays: 0. Absent: Colbert-Kean, 1. The Council Bill was read as **Council Bill No. 2020-602**

ORDINANCES – SECOND READING AND THIRD READING

UNFINISHED BUSINESS

NEW BUSINESS

News from Public Information Officer, Lynn Onstot

The City of Joplin has announced that the annual leaf pick-up program has ended with all residential areas being canvassed. However, if residents still have leaves, the City crews will provide "special request pick-ups." Residents wanting to place their address on the pick-up list should call the Parks Department at 625-4750 between 9 a.m. and 4 p.m. by January 29.

Tickets are now on sale for the annual Daddy Daughter Date Night hosted by the Joplin Parks and Recreation Department. This year's date nights are Friday, February 7 and Saturday, February 8. The event is held from 6:30-9 pm at Memorial Hall and includes music, dancing, games buffet dinner, prizes and a complimentary picture. The program is designed for dads, grandfathers, or other father figures who would like to bring their daughter(s) who are between ages 3 and 12. Due to limited seating, pre-registration is required. Tickets are $35 per couple, and $15 for each additional daughter. To register, go to joplinparks.org or call 417-625-4750.

A reminder to residents: if the City has an announcement regarding a service or a closure due to bad weather, it will be posted to our Facebook page, as well as listed on the local television stations. We encourage our residents to watch for these during hazardous weather conditions.

More information about these activities and other events can be found on the City's website at joplinmo.org and our Facebook page.

Vote to go into closed session, which shall pertain to the hiring, firing, disciplining, or promotion of an employee or particular employees of a governmental body involving personal information; as set forth in Section 610.021(3) RSMo, as amended, 2019. This meeting, record, and vote to be closed to the extent provided by law. The City Council shall adjourn at the end of the session. Motion by Mr. Stanley second by Mr. Brown to go into closed session. Voting in favor were Council Members: Brown, Cortez, Lawson, Monteleone, Reid Adams, Shaw, Stanley and Stinnett, 8. Nays: 0. Absent: Colbert-Kean, 1.

There being no further business, the meeting adjourned at 6:40 p.m.

Respectfully,

Barbara J. Gollhofer, City Clerk

CITY OF JOPLIN
COUNCIL AGENDA ITEM

ITEM
Council Bill 2020-602: authorizing the City of Joplin to enter into a first amendment to memorandum of understanding with the Wildcat Glades Friends Group, a Missouri Nonprofit Corporation ("Friends Group") for the purpose of establishing responsibilities in maintaining and operating Wildcat Park.

MEETING DATE
January 21, 2020

ORIGINATING DEPT
Parks

ATTACHMENTS
CB2020-602 Ordinance; Exhibit A: City-Friends Group Amendment to MOU; Exhibit B: City-Friends Group MOU

REVIEWED BY
Dept. Head: Paul Bloomberg; City Attorney: Peter Edwards; Interim City Manager: Dan Pekarek

SUMMARY
This Council Bill authorizes the City to enter into a first amendment to MOU with the Friends Group for the purpose of establishing responsibilities in maintaining and operating Wildcat Park.

BACKGROUND
In 2019, the City, MDC, and Friends Group entered into a series of MOUs concerning Wildcat Park. Although the Friends Group shares space with MDC, the Friends Group has discovered that it regularly has scheduling conflicts with MDC. Similarly, the Friends Group has found that it does not have sufficient work space for its volunteers. Accordingly, the Friends Group desires to construct an education cottage consistent with the drawings attached hereto. The Friends Group is solely responsible for the cost of any such improvements, including construction, maintenance, repair, and operational costs after completion. At no cost to City, any such improvements, including fixtures, shall become City's property when this Agreement is terminated. In the alternative, at no cost to City, City may require the Friends Group to demolish and remove any such improvements when this Agreement is terminated, to be completed within one (1) year of termination.

FUNDING SOURCE
N/A

RECOMMENDATION
Staff recommends adoption of this Council Bill on a non-emergency basis.

MEMORANDUM OF UNDERSTANDING

This memorandum of understanding (herein "MOU") is made on this 3rd day of June, 2019, by and between the Wildcat Glades Friends Group, a Missouri Nonprofit Corporation (hereinafter referred to as "Friends"), and the City of Joplin, a Missouri Municipal Corporation (hereinafter referred to as "City").

WHEREAS, City owns Wildcat Park (hereinafter referred to as "Park"), a map of which is attached hereto and incorporated by reference as Exhibit A; and

WHEREAS, Friends is a Missouri Nonprofit Corporation formed by citizens of the Joplin, MO area in early 2018; and

WHEREAS, Friends' purpose is "To protect the area known as Wildcat Park and the surrounding chert glade environment, habitat, and wildlife by promoting awareness and sustainability, providing education and recreation space and programs, and sponsoring nature-based activities."

NOW, THEREFORE, in consideration of the mutual promises set forth herein and for the other good and valuable consideration, the receipt and sufficiency of which is hereby acknowledged, Friends and City agree as follows:

1. Responsibilities of Friends. Friends will assist City in maintaining and operating the Park, including but not limited to:

a. Friends will screen and train any volunteers. Furthermore, any volunteers will be required to sign a Volunteer Agreement, attached hereto and incorporated by reference as Exhibit B.

b. Trail Stewardship. Friends will assist City in the maintenance and operation of the

EXH. A

trail system including but not limited to maintaining the path and adjacent landscaping (approximately two (2) feet on either side of the trail) where it is reasonably practical and safe to do so, and keeping the same clear of obstruction, such as trash, vegetation, etc. Friends will immediately notify the City of any dangerous condition on the trail and will not attempt to remedy the same.

c. Water Festival. Friends has agreed to assume primary responsibility for the Water Festival, which is an event held in early August and provides educational and recreational activities for the public. Friends and City agree to make a good faith effort to work together to assure the safety of the attendees and the success of the event.

d. Pavilion. Friends agrees to maintain the pavilion, including cleaning and removal of recycling and trash. Friends is permitted to rent the pavilion for a reasonable amount in order to cover the costs associated with these responsibilities.

e. Ball Fields. Friends and City agree to make a good faith effort to work together to facilitate future events and programming in the park area currently occupied by the ball fields.

2. Responsibilities of City. City will bear primary responsibility in maintaining and operating the Park.

3. Term. The term of this MOU shall be for a period of one (1) year from the date hereof. This MOU shall automatically renew for up to four (4) successive one (1) year terms upon the same terms, covenants, and conditions as herein specified.

4. Insurance. Friends shall provide liability insurance during the term of this Agreement, issued by an insurance company authorized to do business in the State of Missouri, covering City, its agents, employees, and invitees, and naming City as an additional insured, in the amount of One Million Dollars ($1,000,000.00) for Combined Single Limit for Personal Injury or Property

Damage. Such insurance shall be evidenced by filing with the City an Insurance Certificate, naming City as an additional insured under such policy, and providing that such policy shall not be cancelled without thirty (30) days written notice to City. Friends agrees to indemnify and hold and save harmless the City from any and all damages, claims, and assessments of every type and character arising from Friends' activities at or in any way related to the Park.

5. Nature of Relationship. Friends shall perform as an independent contractor and shall not hold itself out to third parties as an agent of City. Friends shall not be considered an agent of City nor shall any of the employees, agents, officers, members, or other personnel of Friends be considered sub-agents of City.

6. Termination. Either party may terminate this MOU at any time by giving ninety (90) days' written notice to the other party.

7. Notices. All notices, requests, and demands to or upon the parties of the MOU shall be deemed to have been given or made when delivered by hand or via certified mail addressed as follows or to other such addresses as may be hereafter designated in writing:

City: City of Joplin
602 S. Main St.
Joplin, MO 64801

Friends: Wildcat Glades Friends Group
P.O. Box 3063
Joplin, MO 64803

8. Amendments. This Agreement contains all of the agreements and conditions made between the parties and may only be modified by written agreement signed by all parties to this Agreement.

9. Assignment. This Agreement shall not be assignable by Friends without the express written consent of City being first obtained.

10. Choice of Law. This Agreement has been made, and its validity, performance, and effect shall be determined, in accordance with the laws of the State of Missouri, and venue for

litigation between the parties shall be solely and exclusively in the Circuit Court of Jasper County, Missouri, or the United States District Court for the Western District of Missouri.

11. Compliance with the Law. Friends agrees to comply with all applicable laws in connection with the performance of this MOU.

12. Severability: The invalidity, illegality, or unenforceability of any provision of this MOU shall not affect the validity, legality, or enforceability of the other provisions of this MOU which shall remain effective.

IN WITNESS WHEREOF, this Memorandum of Understanding has been executed and approved and is effective and operative as to each of the parties as herein provided.

City of Joplin, Missouri

By: Daniel Pekarek
Daniel Pekarek, Interim City Manager

ATTEST:

By: Barbara J. Gollhofer
Barbara J. Gollhofer, City Clerk

Wildcat Glades Friends Group

By: Steve Geardea
(Print) Steve Geardea
(Title) President

ATTEST:

By: Robin Standridge
(Print) Robin Standridge
(Title) Executive Director

FIRST AMENDMENT TO
MEMORANDUM OF UNDERSTANDING AND AGREEMENT

This First Amendment to Memorandum of Understanding and Agreement ("Agreement") is made and entered into this ____ day of February, 2020, by and between the City of Joplin, Missouri, a Municipal Corporation (hereinafter "City") and Wildcat Glades Friends Group, a Missouri Nonprofit Corporation (hereinafter "Friends"), with the City and Friends being referred to collectively as the "parties."

WHEREAS, City and Friends entered into a Memorandum of Understanding and Agreement effective June 3, 2019, wherein City and Friends established respective responsibilities concerning Wildcat Park; and

WHEREAS, Friends desires to make improvements to Wildcat Park, and the parties desire to establish their respective rights concerning said improvements;

NOW, THEREFORE, in consideration of the mutual agreements set forth below, and other good and valuable consideration, the parties do hereby agree as follows:

1. 6. Termination, is hereby amended by changing the notice requirement from ninety (90) days to one hundred twenty (120) days.

2. The Agreement is hereby amended to establish a new paragraph 13 as follows:

"13. Improvements to the Real Estate. Friends is authorized to make improvements to the real estate. These improvements will generally consist of the construction of an education cottage building, consistent with the drawings attached hereto and incorporated by reference as Exhibit C. Friends is solely responsible for the cost of any such improvements, including construction, maintenance, repair, and operational costs after completion. City will have the right to enter any such improvements at reasonable times to inspect the same upon seventy-two (72) hours written notice to Friends. In the event of an emergency situation, City may enter without prior notice to or the consent of Friends. At no cost to City, any such improvements, including fixtures, shall become City's property when this Agreement is terminated. In the alternative, at no cost to City, City may require Friends to demolish and remove any such improvements when this Agreement is terminated, to be completed within one (1) year of termination."

3. The Agreement is hereby amended to establish a new paragraph 14 as follows:

"14. Personal property. At City's direction, Friends is authorized to store and use personal property at Wildcat Park, in and on the improvements. Friends will maintain ownership of any such personal property. Friends agrees to remove any such personal property from Wildcat Park within thirty (30) days of termination. If Friends fails or refuses to remove any such personal

property from Wildcat Park within thirty (30) days of termination, at no cost to City, said property will become City's property."

4. The Agreement is hereby amended to establish a new paragraph 15 as follows:

"15. Hold Harmless. Friends acknowledges and agrees that City makes no representations or warranties regarding Wildcat Park, including whether it is suitable for use as described in Exhibit C or any other purpose. Friends agrees to hold City harmless against and from any and all loss, suits, causes of action, proceedings, costs, damages, liabilities, and expenses arising from or related to this Memorandum of Understanding and Agreement, including use as described in Exhibit C."

5. All other terms, conditions and requirements of the Memorandum of Understanding and Agreement shall remain in full force and effect, except as modified by this Amendment.

6. This document may be signed in separate counterparts by the parties and the signed counterparts, taken together, shall be deemed to constitute an executed original of this document.

CITY OF JOPLIN:	**WILDCAT GLADES FRIENDS GROUP:**
By:_____	By:_____
Name:_____	Name:_____
Title:_____	Title:_____
Date:_____	Date:_____

STRUCTURAL GENERAL NOTES
DIVISION 1 – GENERAL REQUIREMENTS

1. THESE DRAWINGS INCLUDING THE INFORMATION CONTAINED HEREON SHALL REMAIN THE PROPERTY OF FALL RIVER HOLDINGS, LLC., WORLDWIDE STEEL BUILDINGS, AND VAN DEURZEN AND ASSOCIATES, P.A. AND ARE PROVIDED SOLELY FOR ERECTING THE BUILDING DESCRIBED IN THE APPLICABLE PURCHASE ORDER AND SHALL NOT BE MODIFIED, REPRODUCED OR USED FOR ANY OTHER PURPOSE WITHOUT PRIOR WRITTEN CONSENT OF FALL RIVER HOLDINGS, LLC., WORLDWIDE STEEL BUILDINGS, AND VAN DEURZEN AND ASSOCIATES, P.A.
2. THE GENERAL CONTRACTOR AND/OR ERECTOR SHALL BE SOLELY RESPONSIBLE FOR GOOD QUALITY WORKMANSHIP IN ERECTING THIS BUILDING IN CONFORMANCE WITH THESE DRAWINGS, DETAILS REFERENCED ON THESE DRAWINGS, WORLDWIDE STEEL BUILDING ERECTION MANUAL AND INDUSTRY STANDARDS PERTAINING TO PROPER ERECTION, INCLUDING THE CORRECT USE OF TEMPORARY BRACING.
3. THE CONTRACTOR AND/OR ERECTOR SHALL EXAMINE ACTUAL JOB CONDITIONS AND BE RESPONSIBLE FOR VERIFYING ALL DIMENSIONS AND ELEVATIONS SHOWN ON THESE ERECTION PLANS WITH THOSE SHOWN ON THE CONTRACT DOCUMENTS. IF ERRORS, OMISSIONS OR DISCREPANCIES ARE FOUND THEY SHALL BE REPORTED TO VAN DEURZEN AND ASSOCIATES, P.A. BEFORE PROCEEDING WITH THE WORK.
4. INSTALLATION OF ADEQUATE TEMPORARY BRACING FOR USE UNTIL CONSTRUCTION IS COMPLETE IS THE RESPONSIBILITY OF THE ERECTOR.
5. EXACT LOCATION OF WINDOWS, OVERHEAD DOORS, AND WALK DOORS SHALL BE DETERMINED DURING BUILDING ERECTION. TRUSSES AND DIAGONAL BRACING SHALL NOT BE MOVED TO INSTALL WINDOWS, OVERHEAD DOORS, AND WALK DOORS.
6. CONCRETE GROUT, ANCHOR BOLTS, AND ANY OTHER EMBEDDED ITEMS ARE TO BE FURNISHED BY OTHERS.
7. ANCHOR BOLT DIAMETERS WERE DETERMINED BY ALLOWABLE SHEAR AND TENSION PER AISC SPECIFICATIONS (FY = 36 KSI). ANCHOR BOLT LENGTH AND METHOD OF TRANSFERRING FORCES FROM ANCHOR BOLTS TO FOOTINGS ARE TO BE DETERMINED BY OTHERS.
8. DESIGN LOADS AND REACTIONS ARE FURNISHED ON THIS DRAWING.
9. FOUNDATION MUST BE LEVEL, SQUARE, AND SMOOTH. ANCHOR BOLTS MUST BE ACCURATELY PLACED AS SHOWN ON THIS DRAWING OR STEEL WILL NOT FIT.
10. ALL BOLTS TO BE SAE J429 GRADE 5 – BOLTS SHALL BE TIGHTENED IN ACCORDANCE WITH THE "SPECIFICATION FOR STRUCTURAL JOINTS USING ASTM A325 OR A490 BOLTS" SUBSECTION TITLED "TURN-OF-NUT TIGHTENING".
11. STRUCTURAL STEEL ANGLES AND WEB MEMBERS RODS ARE ASTM A572 GRADE 50, SIZES ARE NOTED ON SHOP DRAWINGS. SHOP DRAWINGS ARE NOT PROVIDED WITH THE ERECTION SET UNLESS REQUESTED.
12. WIND RODS ARE 1/2"ø ASTM A572 GRADE 50 (UNLESS NOTED OTHERWISE) WITH ENDS THREADED, DOUBLE WHERE NOTED ON PLANS/ELEVATIONS
13. MISCELLANEOUS PLATE ARE ASTM A36
14. WIND AND TRUSS CHORD BRACING ARE AN INTEGRAL PART OF THE STRUCTURAL SYSTEM AND MUST BE PROPERLY INSTALLED PRIOR TO ERECTION OF WALL AND ROOF SHEETS. REMOVAL OR ALTERATION OF WALL BRACING AND TRUSS CHORD BRACING WITHOUT PRIOR AUTHORIZATION IS PROHIBITED.
15. BUILDING SUBFRAMING:

    ALL LIGHT GAUGE FRAMING SHALL CONFORM TO THE REQUIREMENTS OF ASTM A653 GRADE 50 WITH A MINIMUM YIELD STRESS OF 50000 PSI.

    a. GIRTS: 3 5/8" x 1 5/8" x 20ga
    b. PURLINS: 6" x 1 5/8" x 20ga

BUILDING CODE	2012 IBC/ASCE 7-10
DESIGN LOADS	
ROOF LIVE	20 PSF Reduced Per ASCE 7-10 Sec 4.8
ROOF DEAD (COLLATERAL)	10 PSF (2 PSF + SELF WEIGHT + 5 PSF SOLAR)
ROOF SNOW LOAD	30 PSF
GROUND SNOW LOAD	43 PSF (UNHEATED)
WIND	
BASIC WIND SPEED	115 MPH (Vult)
EXPOSURE	C
RISK CATEGORY	II

	COLUMN GRID A		COLUMN GRID B	
	HORIZONTAL REACTION (lbs)	VERTICAL REACTION (lbs)	HORIZONTAL REACTION (lbs)	VERTICAL REACTION (lbs)
DEAD LOAD	70	2723	-70	2723
ROOF LIVE LOAD	57	3532	-57	3532
SNOW LOAD	-26	6338	26	6338
Wind 0° - Neg (MWFRS Load Case A)	-217	-4270	-903	-1987
Wind 0° - Pos (MWFRS Load Case A)	-699	-2320	-594	-1381
Wind 180° - Neg (MWFRS Load Case A)	861	-1857	240	-4287
Wind 180° - Pos (MWFRS Load Case A)	552	-1250	721	-2337
Wind 90° - Neg (MWFRS Load Case B)	783	-2907	-465	-1936
Wind 90° - Pos (MWFRS Load Case B)	679	-2146	-362	-1175
Wind 270° - Neg (MWFRS Load Case B)	465	-1936	-783	-2907
Wind 270° - Pos (MWFRS Load Case B)	362	-1175	-679	-2146
LIVE LOAD (ADDITIONAL)	0	0	0	0

Notes:
1. ALL REACTIONS ARE UNFACTORED
2. NO REACTIONS PROVIDED FOR ENDWALL COLUMNS, ENDWALLS ARE DESIGNED AS SLIP CONNECTIONS (NO GRAVITY LOADS) UNLESS NOTED OTHERWISE. HORIZONTAL REACTIONS FOR WIND LOADS ARE LESS THAN OR EQUAL TO MAIN FRAME COLUMNS
3. ALL FRAMES (INCLUDED TERMINAL BAYS) ARE DESIGNED FOR THE SAME LOADS UNLESS NOTED OTHERWISE. BUILDING IS DESIGNED TO BE EXPANDED IN THE FUTURE, UNLESS THE OWNER SPECIFICALLY REQUESTS AN ALTERNATE DESIGN; IN THAT CASE, LOADS CAN BE HALVED

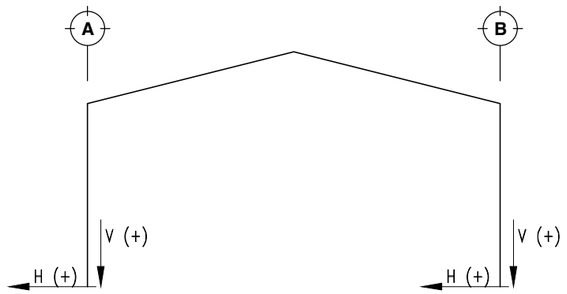

LOADING DIAGRAM

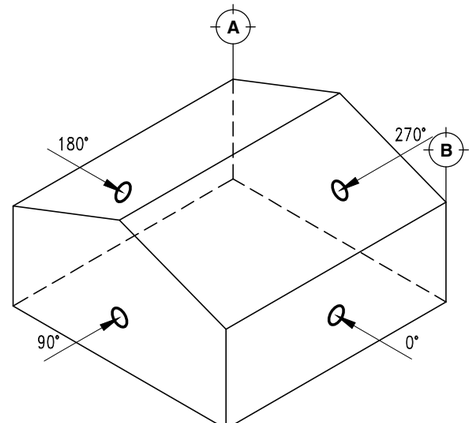

WIND DIAGRAM (ASCE MWFRS 28.4-1)

STATE OF MISSOURI
CHAD M. STREETER
NUMBER PE-2009010617
PROFESSIONAL ENGINEER
11/22/2019

Worldwide Steel Buildings
PO Box 588
Peculiar, MO 64078
Phone: 816.779.6441
Fax: 816.779.7361

VAN DEURZEN & ASSOCIATES, P.A.
11011 KING STREET,SUITE 130
OVERLAND PARK, KS 66210
Van Deurzen and Associates, P.A. © 2019

JOB NAME: STEPHEN GAARDER
WILDCAT GLADES FRIENDS GROUP
(WW JOB #59-60)
201 W RIVIERA

LOCATION: JOPLIN, MO

DESCRIPTION: BUILDING ERECTION DRAWINGS

DRAWN BY:	JWH
CHECKED BY:	CMS
SCALE:	AS NOTED
DATE:	11/22/2019
JOB NUMBER	
376-19132	
SHEET	
E0.0	0

EXACT LOCATION OF WINDOWS, OVERHEAD DOORS, AND WALK DOORS SHALL BE DETERMINED DURING BUILDING ERECTION. TRUSSES AND DIAGONAL BRACING SHALL NOT BE MOVED TO INSTALL WINDOWS, OVERHEAD DOORS, AND WALK DOORS.

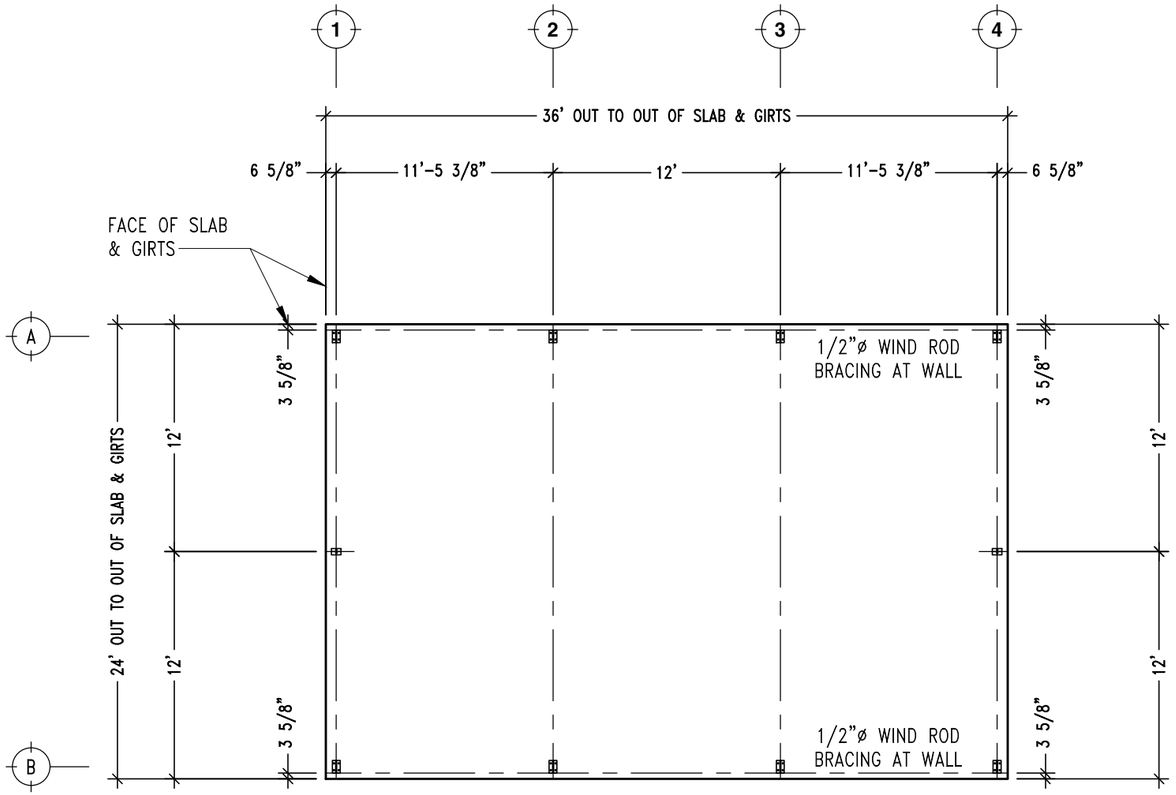

ANCHOR BOLT SETTING PLAN
SCALE: 1/8" = 1'-0"

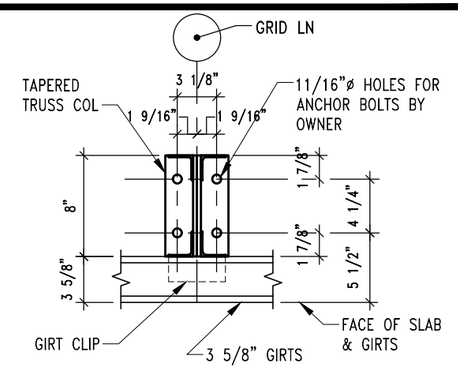

SIDEWALL ANCHOR BOLT
SCALE: 1"= 1'-0"

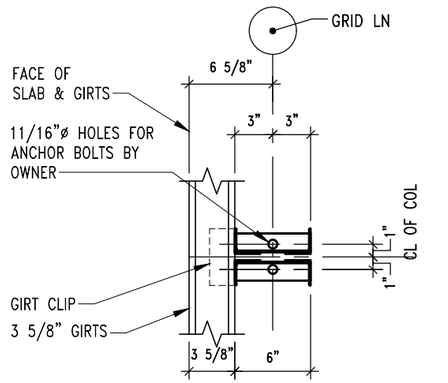

ENDWALL ANCHOR BOLT
SCALE: 1"= 1'-0"

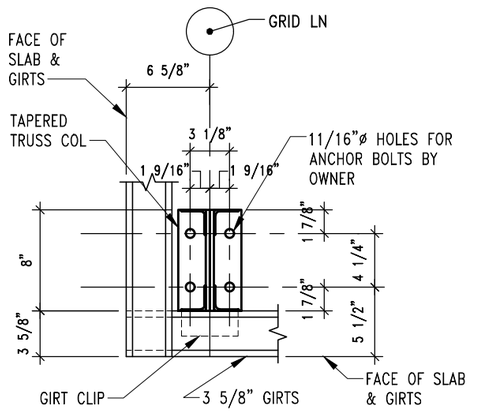

CORNER ANCHOR BOLT
SCALE: 1"= 1'-0"

STATE OF MISSOURI
CHAD M. STREETER
NUMBER PE-2005010617
PROFESSIONAL ENGINEER
11/22/2019

Worldwide Steel Buildings
PO Box 588
Peculiar, MO 64078
Phone: 816.779.7361
Fax: 816.779.6441

VAN DEURZEN & ASSOCIATES, P.A.
11011 KING STREET,SUITE 130
OVERLAND PARK, KS 66210

Von Deurzen and Associates, P.A. © 2019

JOB NAME: STEPHEN GAARDER
WILDCAT GLADES FRIENDS GROUP
(WW JOB #59-60)
201 W RIVIERA

LOCATION: JOPLIN, MO

DESCRIPTION: BUILDING ERECTION DRAWINGS

DRAWN BY:	JWH
CHECKED BY:	CMS
SCALE:	AS NOTED
DATE:	11/22/2019
JOB NUMBER	
376-19132	
SHEET	
E1.0	0

EXACT LOCATION OF WINDOWS, OVERHEAD DOORS, AND WALK DOORS SHALL BE DETERMINED DURING BUILDING ERECTION. TRUSSES AND DIAGONAL BRACING SHALL NOT BE MOVED TO INSTALL WINDOWS, OVERHEAD DOORS, AND WALK DOORS.

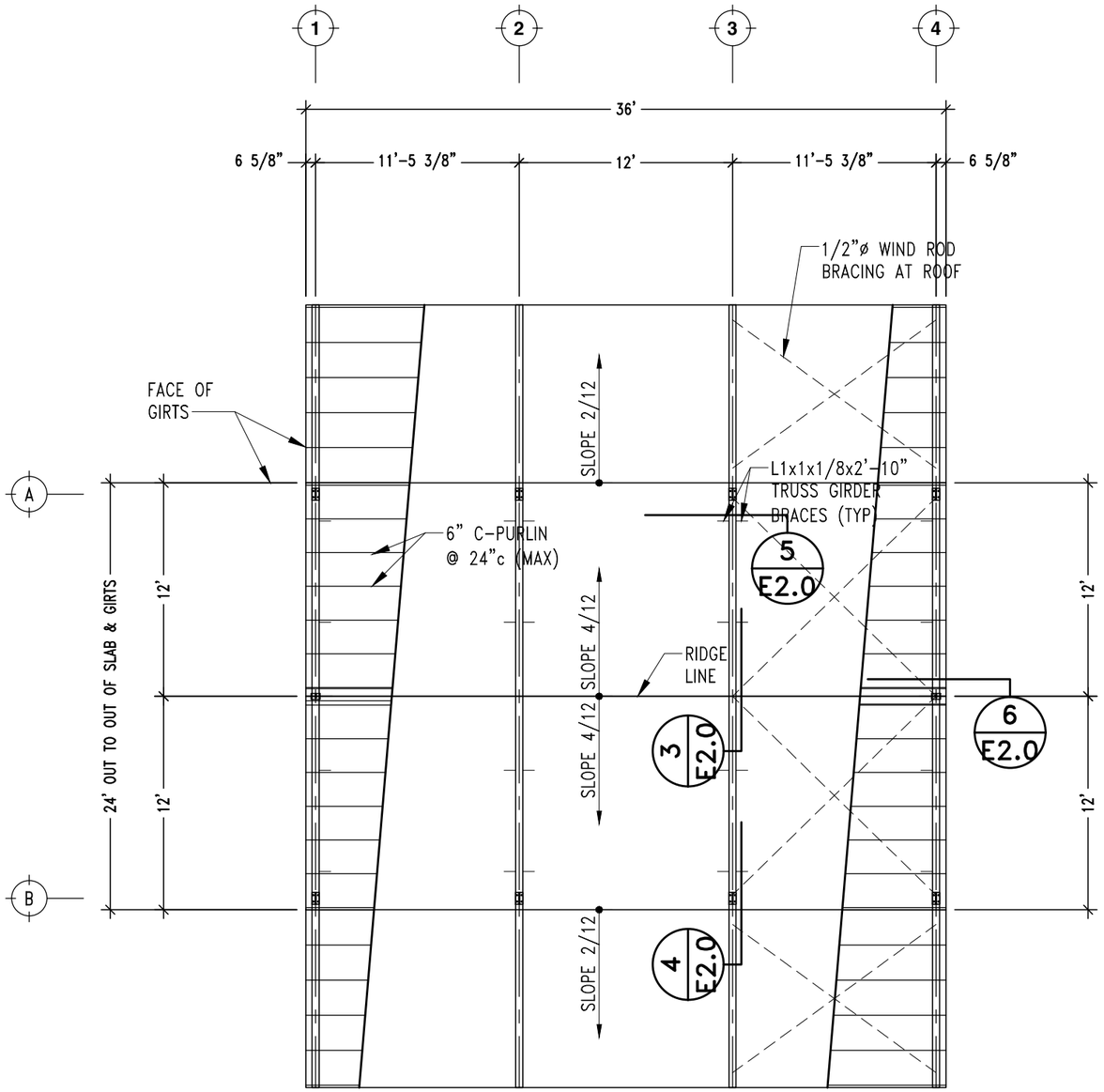

ROOF FRAMING PLAN
SCALE: 1/8" = 1'-0"

STATE OF MISSOURI
CHAD M. STREETER
NUMBER PE-2005010617
PROFESSIONAL ENGINEER
11/22/2019

Worldwide Steel Buildings
PO Box 588
Peculiar, MO 64078
Fax: 816.779.7361
Phone: 816.779.6441

VAN DEURZEN & ASSOCIATES, P.A.
11011 KING STREET,SUITE 130
OVERLAND PARK, KS 66210
Van Deurzen and Associates, P.A.

© 2019

JOB NAME: STEPHEN GAARDER
WILDCAT GLADES FRIENDS GROUP
(WW JOB #59-60)
201 W RIVIERA

LOCATION: JOPLIN, MO

DESCRIPTION: BUILDING ERECTION DRAWINGS

DRAWN BY:	JWH
CHECKED BY:	CMS
SCALE:	AS NOTED
DATE:	11/22/2019
JOB NUMBER	
376-19132	
SHEET	
E1.1	0

EXACT LOCATION OF WINDOWS, OVERHEAD DOORS, AND WALK DOORS SHALL BE DETERMINED DURING BUILDING ERECTION. TRUSSES AND DIAGONAL BRACING SHALL NOT BE MOVED TO INSTALL WINDOWS, OVERHEAD DOORS, AND WALK DOORS.

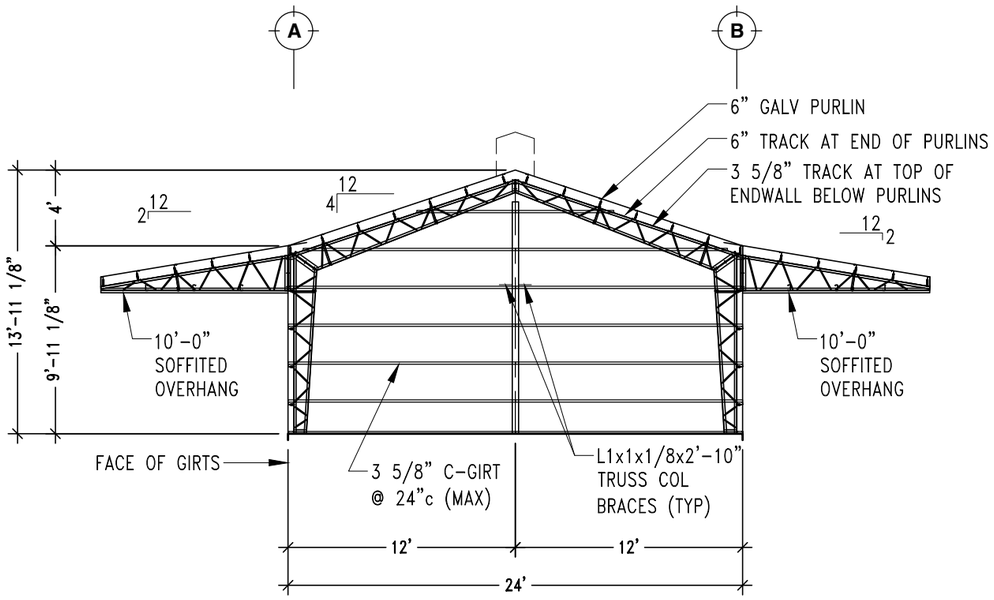

FRONT ELEVATION
SCALE: 1/8" = 1'-0"

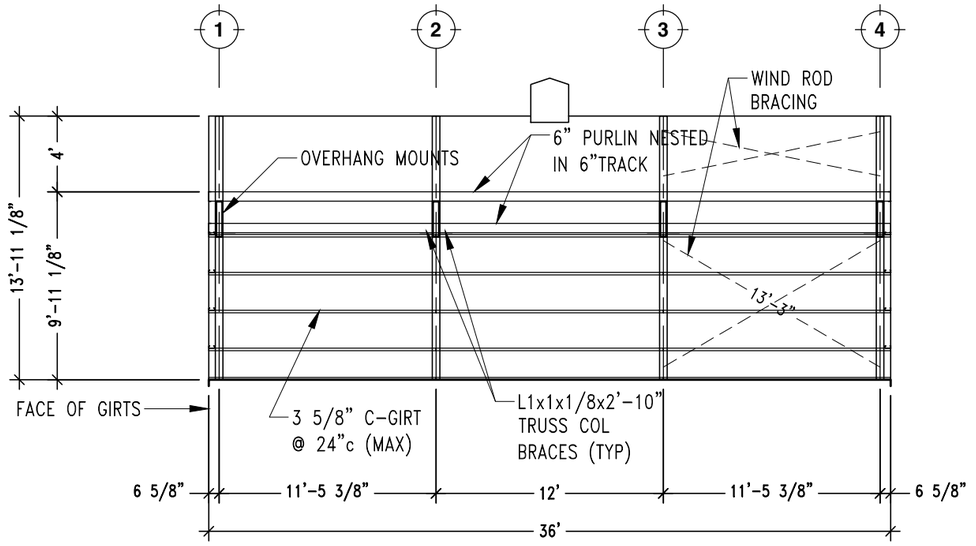

RIGHT ELEVATION
SCALE: 1/8" = 1'-0"

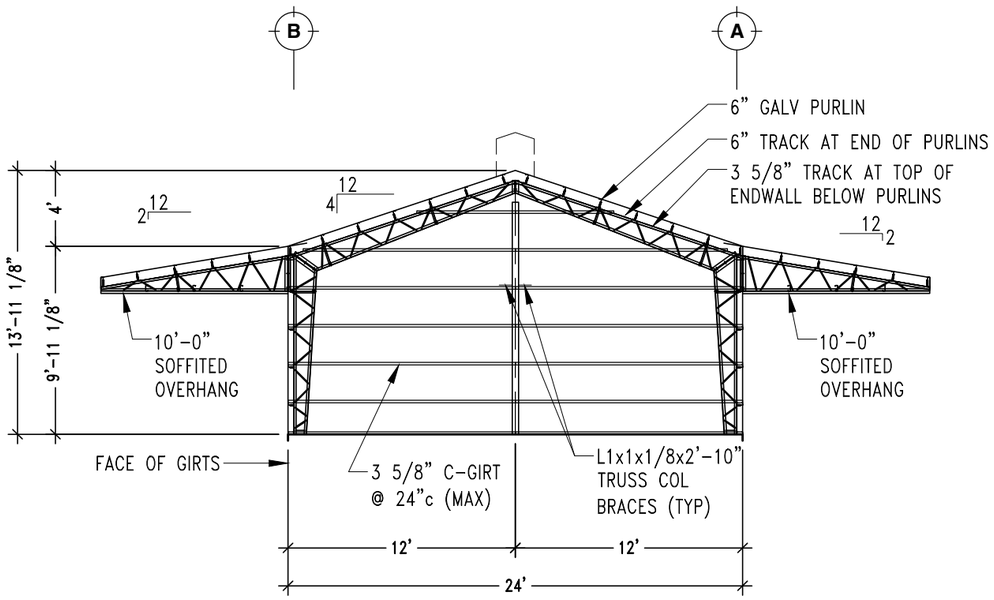

REAR ELEVATION
SCALE: 1/8" = 1'-0"

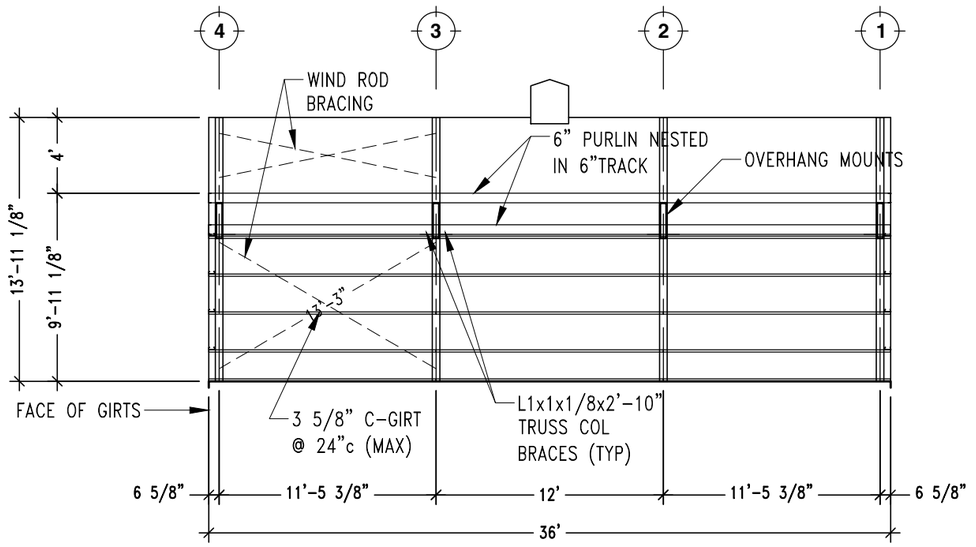

LEFT ELEVATION
SCALE: 1/8" = 1'-0"

STATE OF MISSOURI
CHAD M. STREETER
NUMBER PE-2005010617
PROFESSIONAL ENGINEER
11/22/2019

Worldwide Steel Buildings
PO Box 588
Peculiar, MO 64078
Fax: 816.779.7361
Phone: 816.779.6441

VAN DEURZEN & ASSOCIATES, P.A.
11011 KING STREET,SUITE 130
OVERLAND PARK, KS 66210
Van Deurzen and Associates, P.A. © 2019

JOB NAME: STEPHEN GAARDER
WILDCAT GLADES FRIENDS GROUP
(WW JOB #59-60)
201 W RIVIERA

LOCATION: JOPLIN, MO

DESCRIPTION: BUILDING ERECTION DRAWINGS

DRAWN BY:	JWH
CHECKED BY:	CMS
SCALE:	AS NOTED
DATE:	11/22/2019
JOB NUMBER	
376-19132	
SHEET	
E1.2	0

EXACT LOCATION OF WINDOWS, OVERHEAD DOORS, AND WALK DOORS SHALL BE DETERMINED DURING BUILDING ERECTION. TRUSSES AND DIAGONAL BRACING SHALL NOT BE MOVED TO INSTALL WINDOWS, OVERHEAD DOORS, AND WALK DOORS.

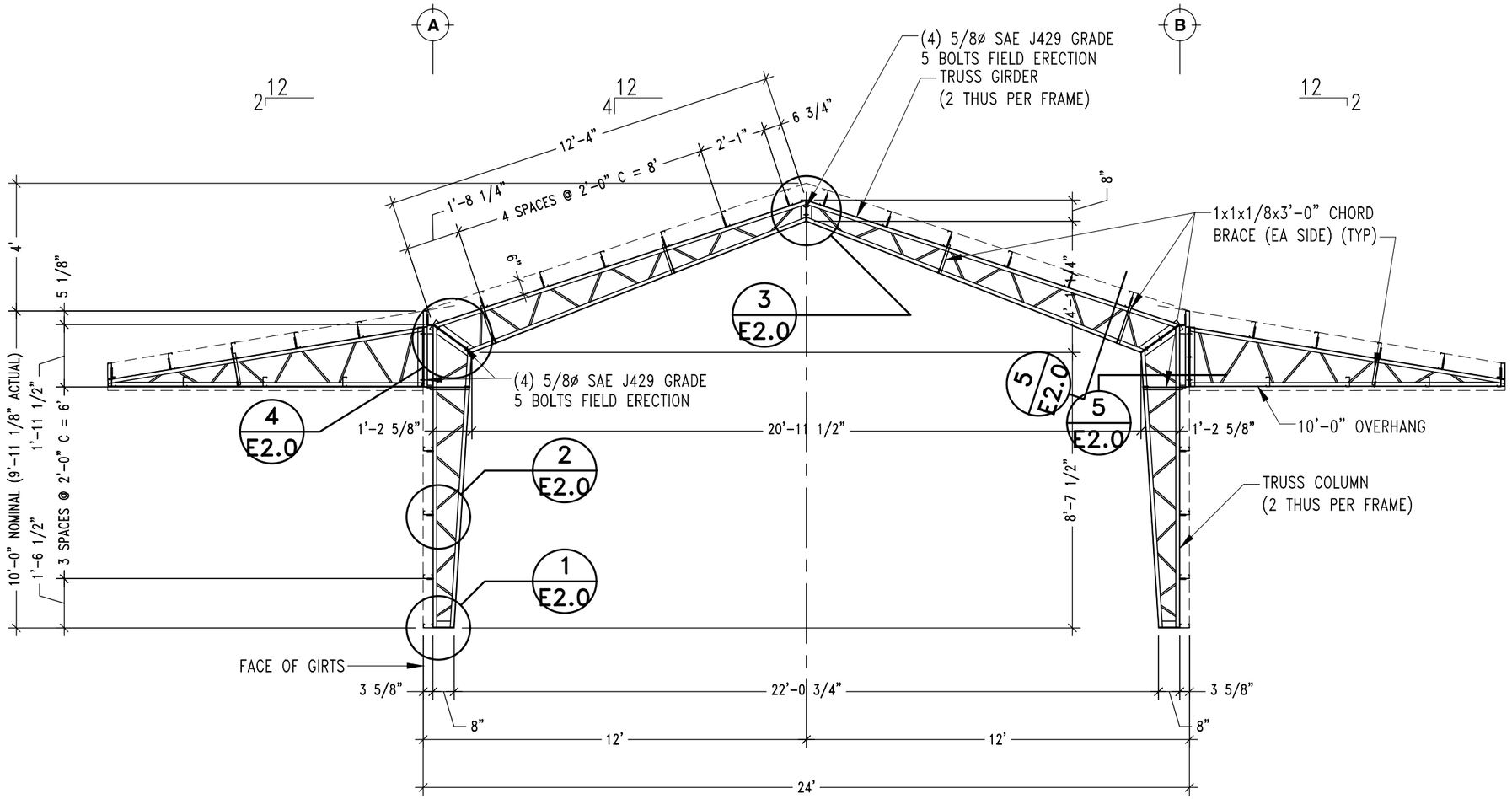

TYPICAL BUILDING SECTION

SCALE: 1/4" = 1'-0"

STATE OF MISSOURI
CHAD M. STREETER
NUMBER PE-2009010617
PROFESSIONAL ENGINEER
11/22/2019

Worldwide Steel Buildings
PO Box 588
Peculiar, MO 64078
Fax: 816.779.7361
Phone: 816.779.6441

VAN DEURZEN & ASSOCIATES, P.A.
11011 KING STREET,SUITE 130
OVERLAND PARK, KS 66210
Von Deurzen and Associates, P.A.

© 2019

JOB NAME: STEPHEN GAARDER
WILDCAT GLADES FRIENDS GROUP
(WW JOB #59-60)
201 W RIVIERA
LOCATION: JOPLIN, MO
DESCRIPTION: BUILDING ERECTION DRAWINGS

DRAWN BY:	JWH
CHECKED BY:	CMS
SCALE:	AS NOTED
DATE:	11/22/2019
JOB NUMBER	
376-19132	
SHEET	
E1.3	0

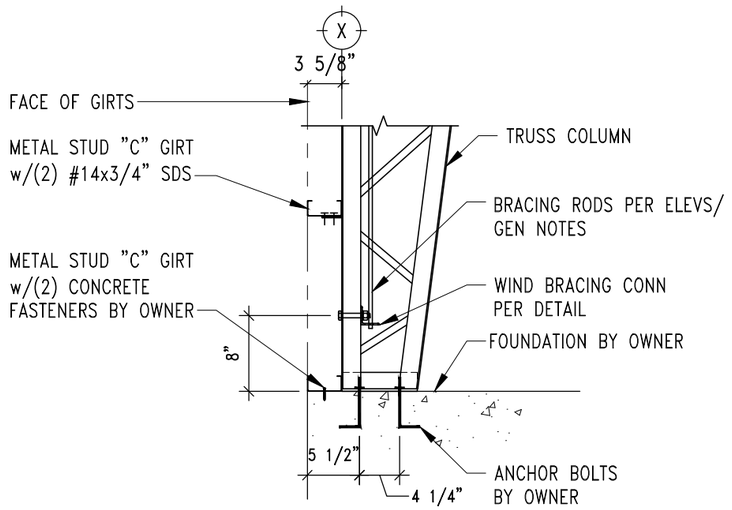

COLUMN BASE DETAIL — 1 / E2.0
SCALE: 3/4" = 1'-0"

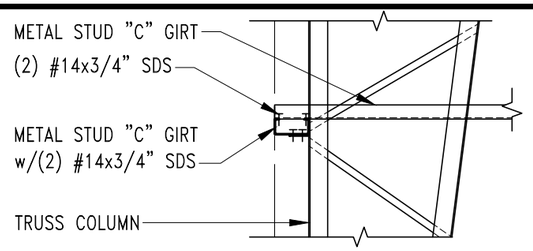

GIRT CORNER CONN. — 2a / E2.0
SCALE: 3/4" = 1'-0"

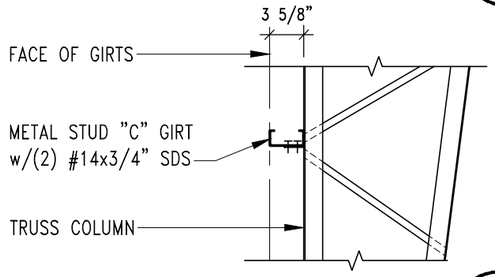

GIRT CONN. DETAIL — 2 / E2.0
SCALE: 3/4" = 1'-0"

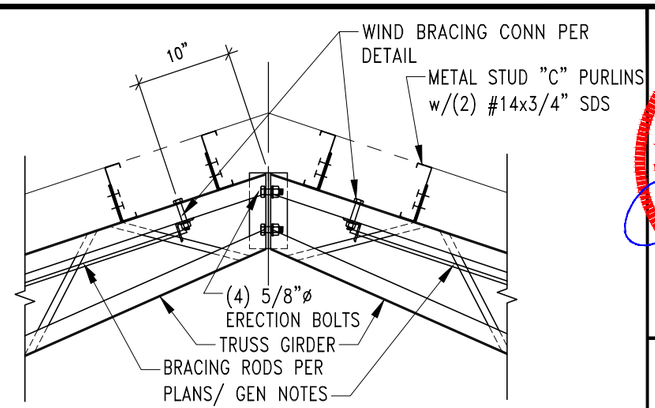

RIDGE DETAIL — 3 / E2.0
SCALE: 3/4" = 1'-0"

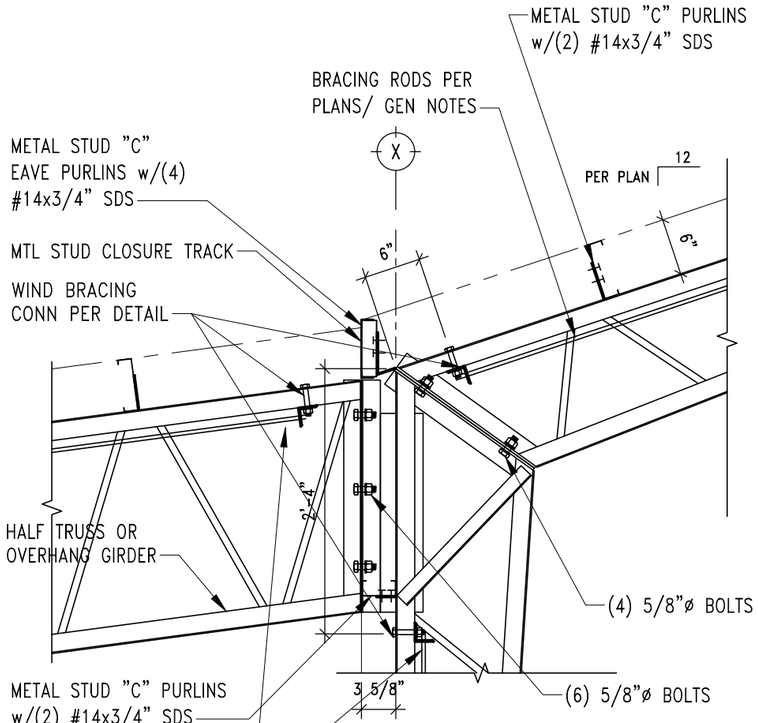

KNEE DETAIL — 4 / E2.0
SCALE: 3/4" = 1'-0"

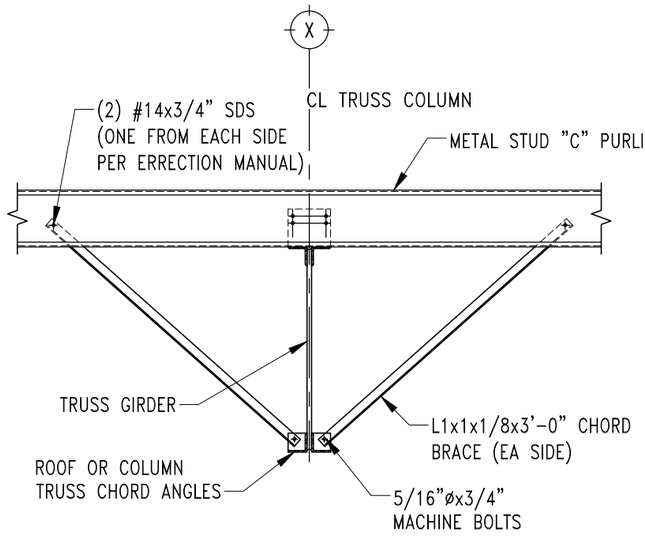

NOTE: WHERE BRACES ARE CROWDED BY A DOOR, FIELD CUT THE ANGLE (& DRILL HOLE) TO PLACE THE END AS CLOSE TO THE DOOR JAMB AS POSSIBLE

TRUSS CHORD BRACE — 5 / E2.0
SCALE: 3/4" = 1'-0"

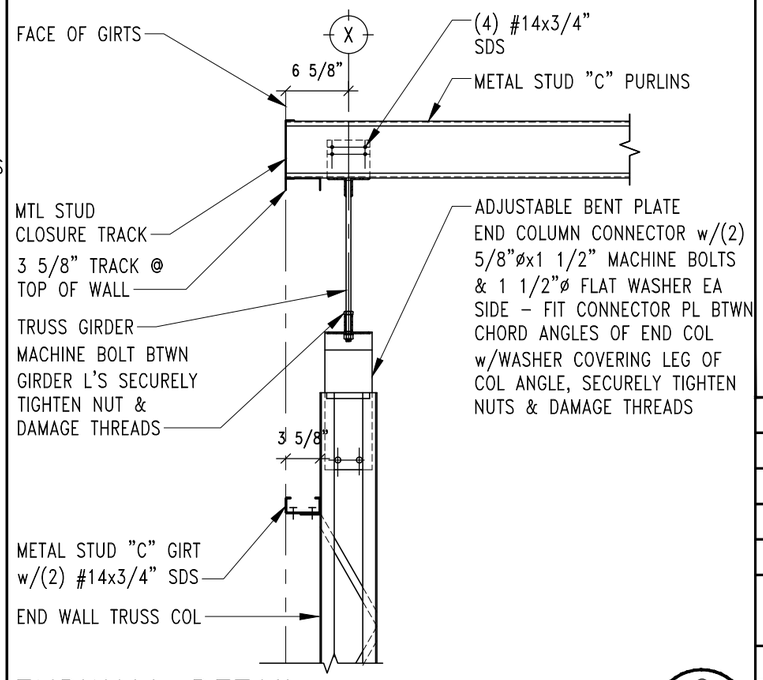

ENDWALL DETAIL — 6 / E2.0
SCALE: 3/4" = 1'-0"

STATE OF MISSOURI
CHAD M. STREETER
NUMBER PE-2005010617
PROFESSIONAL ENGINEER
11/22/2019

Worldwide Steel Buildings
PO Box 588
Peculiar, MO 64078
Fax: 816.779.7361
Phone: 816.779.6441

VAN DEURZEN & ASSOCIATES, P.A.
11011 KING STREET,SUITE 130
OVERLAND PARK, KS 66210
Van Deurzen and Associates, P.A.

© 2019

JOB NAME: STEPHEN GAARDER
WILDCAT GLADES FRIENDS GROUP
(WW JOB #59-60)
201 W RIVIERA

LOCATION: JOPLIN, MO

DESCRIPTION: BUILDING ERECTION DRAWINGS

DRAWN BY:	JWH
CHECKED BY:	CMS
SCALE:	AS NOTED
DATE:	11/22/2019
JOB NUMBER	
376-19132	
SHEET	
E2.0	⚠0

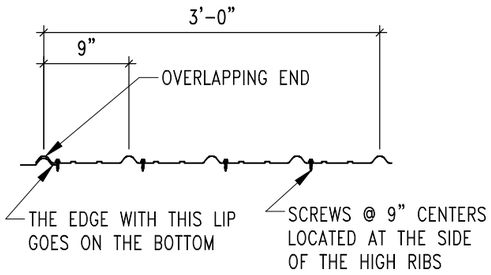

29 GAUGE (80 KSI) RIBBED PANEL at ROOF AND WALLS – ATTACH WITH #12 x 1 1/4" METAL TO METAL SELF DRILLING SCREWS WITH RUBBER WASHERS
ALTERNATE: IF USING WOOD SUBFRAMING ATTACH WITH #9 x 1 1/2" WOOD SCREWS

WALL / ROOF PANEL ATTACHMENT

SCALE: 3/4"= 1'-0"

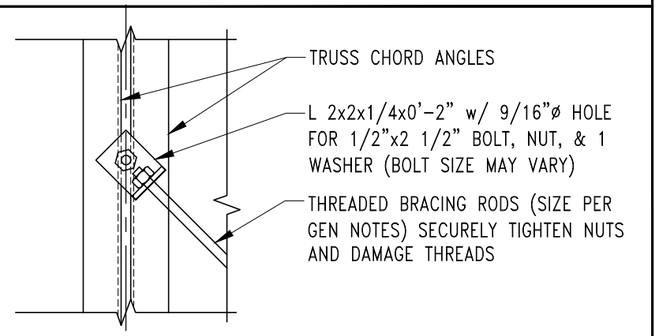

WIND BRACING CONNECTION (SINGLE)

SCALE: 2"= 1'-0"

STATE OF MISSOURI
CHAD M. STREETER
NUMBER PE-2005010617
PROFESSIONAL ENGINEER
11/22/2019

Worldwide Steel Buildings
PO Box 588
Peculiar, MO 64078
Phone: 816.779.7361
Fax: 816.779.6441

VAN DEURZEN & ASSOCIATES, P.A.
11011 KING STREET,SUITE 130
OVERLAND PARK, KS 66210
Van Deurzen and Associates, P.A. © 2019

JOB NAME: STEPHEN GAARDER
WILDCAT GLADES FRIENDS GROUP
(WW JOB #59-60)
201 W RIVIERA

LOCATION: JOPLIN, MO

DESCRIPTION: BUILDING ERECTION DRAWINGS

DRAWN BY:	JWH
CHECKED BY:	CMS
SCALE:	AS NOTED
DATE:	11/22/2019
JOB NUMBER	
376-19132	
SHEET	
E2.1	0

COUNCIL BILL NO. 2020-602 ORDINANCE NO

AN ORDINANCE authorizing the City of Joplin to enter into a first amendment to memorandum of understanding with the Wildcat Glades Friends Group, a Missouri Nonprofit Corporation ("Friends Group") for the purpose of establishing responsibilities in maintaining and operating Wildcat Park; and authorizing the Interim City Manager to execute said memorandum of understanding by and on behalf of the City of Joplin.

BE IT ORDAINED BY THE COUNCIL OF THE CITY OF JOPLIN, MISSOURI, as follows:

Section 1. That the first amendment to memorandum of understanding with the Friends Group for the purpose of establishing responsibilities in maintaining and operating Wildcat Park, a true and accurate copy of said agreement being attached hereto and incorporated as "Exhibit A," be and the same is hereby approved.

Section 2. That the City Manager of the City of Joplin, Missouri, or his designee, is hereby authorized and directed to execute said agreements, or agreements in substantially similar form, by and on behalf of the City of Joplin.

PASSED BY THE COUNCIL OF THE CITY OF JOPLIN, MISSOURI, this _____ day of _____, 2020, by a vote of _____.

_____
Gary L. Shaw, Mayor

ATTEST:

_____
Barbara J. Gollhofer, City Clerk

APPROVED AS TO FORM:

_____
Peter C. Edwards, City Attorney

CITY OF JOPLIN
COUNCIL AGENDA ITEM

ITEM
Resolution 2020-002 – Designating the "Gap Cost" for the purchase of forfeited prior service credit for those Tier II public safety employees voluntarily migrating to the LAGERS retirement system as an employer contribution

MEETING DATE
February 3, 2020

ORIGINATING DEPT
Finance

ATTACHMENTS
Resolution 2020-002; IRS Ruling

REVIEWED BY
Department Head: Leslie Haase; City Attorney: Peter Edwards; City Manager: Dan Pekarek

SUMMARY
This Resolution designates the gap cost for the purchase of forfeited prior service credit for those Tier II public safety employees voluntarily migrating to the LAGERS retirement system as an employer contribution.

BACKGROUND
On November 5, 2019, the voters approved a ½-cent sales tax to close the existing public safety pension plan to new hires and transition those employees to the Missouri Local Government Employees Retirement System (LAGERS). Tier II public safety employees have the voluntary option to terminate service from the policemen's and firemen's pension plan and migrate to LAGERS. Upon this migration, those Tier II employees will forfeit their prior service credit under the pension plan.

Once vested with LAGERS, those employees that migrated will have a voluntary option to purchase their forfeited service credit by returning their full return of contribution from the pension plan to LAGERS. The City will then cover the cost difference to restore the forfeited service credit directly to LAGERS. For this payment to be made directly by the City to LAGERS, and, therefore, not taxable to the employees, the City must adopt a resolution designating this "gap payment" as an employer contribution. As such, this resolution designates this payment as an employer contribution.

FUNDING SOURCE
This item is not applicable to this resolution.

RECOMMENDATION
Staff recommends approval of this resolution.

RESOLUTION NO. 2020-002

A RESOLUTION designating the "gap cost" for the purchase of prior service credit for those Tier II public safety employees voluntarily migrating to the LAGERS retirement system as an employer contribution.

WHEREAS, the voters of Joplin approved a ½-cent sales tax dedicated to close the pension plan to new hires and transition public safety employees to LAGERS; and,

WHEREAS, Tier II public safety employees can voluntarily elect to terminate from the policemen's and firemen's pension plan and migrate to LAGERS; and,

WHEREAS, those migrating employees will forfeit their years of service under the pension plan; and,

WHEREAS, those employees will have the option to purchase their prior service credit by remitting their return of contributions from the pension plan to LAGERS; and,

WHEREAS, there will be an additional cost to purchase their prior service credit in LAGERS also referred to as the "gap cost"; and,

WHEREAS, the IRS allows the City to designate the payment of the "gap cost" as an employer contribution payable directly to LAGERS; and,

WHEREAS, the City Council of Joplin, Missouri desires to designate this payment as an employer contribution.

BE IT RESOLVED BY THE COUNCIL OF THE CITY OF JOPLIN, MISSOURI, as follows:

Section 1. The City Council of the City of Joplin hereby designates any "gap cost" payment paid by the City for forfeited service credit by those Tier II public safety employees migrating to LAGERS as an employer contribution.

Section 2. In accordance with IRS Revenue Ruling 2006-43, the City designates this "gap cost" payment as an employer contribution to be paid directly from the City to LAGERS on behalf of said employees.

Section 3. That this Resolution shall be in full force and effect from and after the date of its passage and approval.

IN WITNESS WHEREOF, I have hereunto set my hand and caused the Seal of the City of Joplin, Missouri to be affixed this 3rd day of February 2020.

_____
Gary L. Shaw, Mayor

ATTEST:

_____
Barbara J. Gollhofer, City Clerk

IRS

Employer "Pick-Up" Contributions to Benefit Plans

Retirement plans that feature a salary reduction or cash-deferred arrangement allow employees to choose to defer some income from tax by electing to place it in a trust account for retirement. By making such an election, the amount deferred is not subject to income tax at the time it was placed in the trust. The deferred amounts are subject to social security and Medicare (FICA) tax.

However, other employer retirement plans are funded either through employer contributions only, or by mandatory employee contributions, with no elections to defer salary. These plans can raise questions about whether the contributions are considered paid by the employer or by the employee, and thus whether these amounts are subject to income tax and FICA withholding. This article is intended to address recent IRS guidance on these questions.

General Rule for Employee Contributions

Contributions made by the employer to an employee retirement plan (whether the plan provides for elective deferrals or not) are not included in employee income. However, any additional contributions made by the employees are included in income, unless they are made under elective deferral provisions. Where no deferral election is possible (such as in a defined benefit plan), employee contributions are included in income. In general, any employer contributions made by an employer to a 401(a) or 403(b) plan on behalf of employees are not treated as made by the employer if they are designated as an employee contribution.

Employer Pick-up

However, IRC section 414(h)(2) provides that for any plan established by a governmental unit, where the contributions of employing units are designated employee contributions, but the employer "picks up" the contributions, the contributions are treated as employer contributions.

For the employee contributions to be deemed picked up by the employer and therefore to be characterized as "employer contributions", certain tests must be met. A series of rulings by the IRS established that only amounts that the governmental employer pays (including certain amounts withheld or otherwise offset from the employee's salary) are considered employer contributions, and are therefore excludable from gross income.

In Revenue Ruling 2006-43, the IRS clarified the requirements for employee contributions to be considered made, or picked up, by the employer.

- Specifies that the contributions, although designated as employee contributions, are being paid by the employer. For this purpose, the employing unit must take formal action to provide that the contributions on behalf of a specific class of employees of the employing unit, although designated as employee contributions, will be paid by the employing unit in lieu of employee contributions.
- Does not permit a participating employee, from and after the date of the "pick-up", to have a cash or deferred election right with respect to designated employee contributions. Participating employees must not be permitted to opt out of the "pick-up", or to receive the contributed amounts directly instead of having them paid by the employing unit to the plan.

Further details of these requirements are contained in Revenue Ruling 2006-43.

Treatment of Contributions for Social Security and Medicare Tax

The above applies to the income tax treatment of employer pick-ups. In CCA 200714018, the IRS addressed the treatment of pick-ups for social security and Medicare tax (FICA) purposes.

Contributions to a retirement plan that come from salary reduction amounts are subject to FICA. IRC 3121(v)(1)(B) indicates that a salary reduction occurs if the amount shown as wages are less than they would have been but for the contribution.

In order for contributions to be considered paid by the employer, and therefore not subject to FICA, the employer contributions:

- Must be mandatory for all employees covered by the retirement system.
- Must be a salary "supplement" and not a salary reduction – in other words, the employer must not reduce employee salary to offset the amount designated as employee contributions.

The amounts that would have been included in wages for FICA tax purposes "but for the employee contribution" are determined based on the facts and circumstances that determine the employee's compensation under the overall employment relationship. If the circumstances indicate that the wages are equal to what they otherwise would have been, but for the contribution, then the amounts are not included in FICA wages. If the facts and circumstances indicate that the contributions reduced or offset the wages paid, they would not meet the test and the contributions to the plan and would be included in FICA wages.

If the employer pays the contributions in addition to salary increases that are consistent with historical norms, this is an indication that they are not paid in lieu of present or future salary and are not included in wages for FICA purposes.

Page Last Reviewed or Updated: 09-Jan-2020

CITY OF JOPLIN
COUNCIL AGENDA ITEM

ITEM
Council Bill 2020-105
Agreement and Work Authorization for the Baker's Branch Interceptor Replacement Project

MEETING DATE
February 3, 2020

ORIGINATING DEPT
Public Works

REVIEWED BY
Director of Public Works – David Hertzberg, Director of Finance – Leslie Haase, City Attorney – Peter C. Edwards, Interim City Manager – Dan Pekarek

SUMMARY
This Council Bill approves an agreement and a work authorization with Allgeier, Martin and Associates, Inc. (AMA), for the Baker's Branch Interceptor Replacement Project in the not to exceed amount of One Hundred Fifty-Six Thousand Eight Hundred and No/100 Dollars ($156,800.00)

BACKGROUND
Two parallel sewer lines, built more than 50 years ago, serve the sanitary sewer needs for residents and businesses between Florida & Newman Rd. up to Zora and Duquesne Rd., including the Joplin-Webb City Industrial Park. City staff have been evaluating the condition and capacity of the existing pipes, by cleaning, metering the flows in the sewer mains, smoke testing, and determining the Level of Service (LOS) provided by the pipes via the 2018 Hydraulic Model. Due to the poor condition of the existing clay and concrete pipes and their manholes, the Model determined that the system operates with a limited LOS due to a high influx of inflow and infiltration. For these reasons, the 2019 Facilities Plan done by AMA, identified this parallel piping replacement project as a critical need, financed by the 2020-2024 rate study. City staff have prioritized this project above others due to the residential construction taking place within the immediate area. Generally, the project involves replacing the parallel sewer lines with about 3,700 feet of a single, large-diameter pipe, and replacing old manholes in the area indicated on the Exhibit map. The consultant's fees are within industry standards for design, bidding, and construction management. Public Works intends to provide construction inspection and administration.

FUNDING SOURCE
These payments are included in the FY 2019-20 budget of the Wastewater fund.

RECOMMENDATION
Staff recommends adoption of this Council Bill, approving this agreement and work authorization, on an Emergency basis; being an ordinance relating to a public improvement is an emergency within the meaning of Section 2.12(6) of the HOME RULE CHARTER of the City of Joplin, Missouri and the Council hereby declares that this ordinance shall be in full force and effect from and after its passage.

ATTACHMENTS

Exhibit Map; CB 2020-105 Ordinance; Agreement; Work Authorization AMA-OC20-001

CITY		ENGINEER	
CITY OF JOPLIN 602 S. MAIN STREET JOPLIN, MO 64801		Name: Allgeier, Martin and Associates, Inc. Address: 7231 East 24th Street, P.O. Box 2627 Joplin, MO 64804	
Attention: Mr. Chris Parker, P.E. Sanitary Sewer Engineer		Attention: Chris Erisman, P.E	
Department: Public Works		Phone: 417-680-7200	Fax: 417-680-7300
Phone: 417-624-0820, ex 584	Fax: 417-625-4738		

AGREEMENT FOR PROFESSIONAL ENGINEERING CONSULTING SERVICES

THIS AGREEMENT, made and entered into this _____ day of _____, 20___, by the parties identified above.

WITNESSETH:

THAT, WHEREAS, the City of Joplin desires to engage the Engineer to render certain technical and professional services in connection with a projects identified on future Work Authorizations to this Agreement;

WHEREAS, the Engineer made certain representations and statements to the City with respect to the provision of such services and the City has accepted said proposal; and

WHEREAS, the Engineer represents Engineer is licensed by the Missouri Board for Architects, Professional Engineers, and Land Surveyors to perform the services designated under this contract, and further represents that all survey services shall be done under the direction of a Land Surveyor licensed by the Missouri Board for Architects, Professional Engineers, and Land Surveyors;

NOW, THEREFORE, for the considerations herein expressed, it is agreed by and between the City and the Engineer as follows:

1. Services. The City agrees to engage the services of the Engineer and the Engineer agrees, upon receipt of each duly executed Work Authorization, to perform the services described in the Work Authorization. The services of the Engineer shall commence as soon as practicable after the execution of a Work Authorization, unless otherwise directed in writing, and shall be undertaken and completed in such sequence as to assure their expeditious completion in the light of the purposes of the contract. The Engineer shall be responsible for the professional quality, technical accuracy, timely completion, and the coordination of all designs, drawings, specifications, reports, and other services furnished by the Engineer under this Agreement. Approval by the City and other agencies of drawings, designs, specifications, reports, and incidental engineering work or materials furnished hereunder shall not in any way relieve the Engineer of his responsibility for the technical adequacy of his work except as to matters involving peculiar conditions or uses of the property known to the City or other agencies but not to the Engineer.

2. Term. The services of the Engineer shall commence as soon as practicable after the execution of this contract, unless otherwise directed in writing, and shall be undertaken and completed in such sequence as to assure their expeditious completion in the light of the purposes of the contract, but in any event, all of the services required hereunder shall be completed as set forth in the schedule for the project which is attached hereto as Exhibit A of any executed Work Authorization.

3. Payment. The City, pursuant to each fully executed Work Authorization, shall pay Engineer the consideration set forth in the Work Authorization, which shall constitute complete payment for the services furnished in connection with the work required to be performed under the Work Authorization.

4. Exchange of Data. All information, data, and reports as are in the City's possession and necessary for the carrying out of the work, shall be furnished to the Engineer without charge, and the parties shall cooperate with each other in every way possible in carrying out the scope of services.

5. Personnel. The Engineer represents that Engineer will secure at Engineer's own expense, all personnel required to perform the services called for under this contract by Engineer. Such personnel shall not be employees of or have any contractual relationship with the City except as employees of the Engineer. All of the services required hereunder will be performed by the Engineer or under Engineer's direct supervision and all personnel engaged in the work shall be fully qualified and shall be authorized under state and local law to perform such services. None of the work or services covered by this contract shall be subcontracted without the written approval of the City.

6. Termination of Contract.

a. Termination for breach. Failure of the Engineer to fulfill Engineer's obligations under this contract in a timely and satisfactory manner in accordance with the schedule and description of services set forth in Exhibit A shall constitute a breach of the contract, and the City shall thereupon have the right to immediately terminate the contract. The City shall give written notice of termination to the Engineer by one of three different means: Facsimile Transmission ("FAX") if Engineer has a FAX number; U.S. Postal Service Mails; or by hand delivering a copy of the same to the Engineer; or may give notice by any combination of the above methods. The date of termination shall be the date upon which notice of termination is hand delivered to Engineer or given by FAX, or the third day following mailing of the notice of termination, whichever first occurs. In the event of termination for breach, all finished or unfinished documents, data, studies, surveys, drawings, maps, models, photographs, and reports or other materials prepared by the Engineer under this contract shall at the option of the City become its property, and the Engineer shall be entitled to receive just and equitable compensation for any satisfactory work completed on such documents and other materials; provided, that the Engineer shall not be relieved of liability to the City for damages sustained by the City by virtue of any such breach of the contract by the Engineer.

b. Right to terminate in the absence of breach. Either party may terminate this contract for any reason, by serving notice of intent to terminate upon the other party by the means specified in paragraph A of this section. Such notice shall specify the date of termination, but in no event shall either party terminate the contract under this provision upon less than thirty (30) days' notice to the other party; provided, that the parties may mutually agree to waive the thirty (30) day requirement and to shorten the time for notice of termination. In the event of termination in the absence of breach, all finished or unfinished documents, data, studies, surveys, drawings, maps, models, photographs, and reports or other materials prepared by the Engineer under this contract shall at the option of the City become its property, and the Engineer shall be entitled to receive just and equitable compensation for any satisfactory work completed on such documents and other materials.

7. Conflicts. No salaried officer or employee of the City, and no member of the City Council shall have a financial interest, direct or indirect, in this contract. A violation of this provision renders the contract void. Any federal regulations, and applicable provisions in Section 105.450 et seq. RSMo. shall not be violated. Engineer covenants that it presently has no interest and shall not acquire any interest, direct or indirect, which would conflict in any manner or degree with the performance of services to be performed under this contract. The Engineer further covenants that in the performance of this contract no person having such interest shall be employed.

8. Assignment. The Engineer shall not assign any interest in this contract, and shall not transfer any interest in the same (whether by assignment or novation), without prior written consent of the City thereto. Provided, however, that claims for money due or to become due to the Engineer from the City under this contract may be assigned to a bank, trust company, or other financial institution without such approval. Notice of such assignment or transfer shall be furnished in writing promptly to the City. Any such assignment is expressly subject to all rights and remedies of the City under this agreement, including the right to change or delete activities from the contract or to terminate the same as provided herein, and no such assignment shall require the City to give any notice to any such assignee of any actions which the City may take under this agreement, though City will attempt to so notify any such assignee.

9. Confidentiality of Documents. Any reports, data, design or similar information given to or prepared or assembled by the Engineer under this contract which the City requests to be kept as confidential shall not be made available to any individual or organization by the Engineer without prior written approval of the City.

10. Discrimination. The Engineer agrees in the performance of this contract not to discriminate on the ground or because of race, creed, color, national origin or ancestry, sex, religion, handicap, age, or political opinion or affiliation, against any employee of Engineer or applicant for employment and shall include a similar provision in all subcontracts let or awarded hereunder.

11. Occupational License: The Engineer shall obtain and maintain an occupational license with the City of Joplin, Missouri, if required by city code and any required state or federal license. The cost for this occupational license shall be borne by the Engineer.

No contract will be executed by the City until this occupational license has been obtained and that the Engineer is current on any City taxes is verified.

12. Compliance with Laws. Engineer agrees to comply with all applicable federal, state and local laws or rules and regulations applicable to the provision of services and products hereunder. Engineer affirmatively states that payment of all local, state, and federal taxes and assessments owed by Engineer is current.

13. Affidavit for Contracts Over $5,000.00. That pursuant to Missouri Revised Statute Sections 285.525 through 285.550, if this contract exceeds the amount of $5,000.00 and Engineer is associated with a business entity, Engineer shall provide an acceptable notarized affidavit stating that the associated business entity is enrolled in and participates in a federal work authorization program with respect to the employees working in connection with the contracted services, and that said business entity does not knowingly employ any person who is an unauthorized alien in connection with the contracted services. Additionally, Engineer must provide documentation for said business entity evidencing current enrollment in a federal work authorization program.

14. Nonresident/Foreign Contractors. The Engineer shall procure and maintain during the life of this contract:

a. If the Engineer is a foreign corporation, a certificate of authority to transact business in the State of Missouri from the Secretary of State, unless exempt pursuant to the provisions of Section 351.572 RSMo.

b. A certificate from the Missouri Director of Revenue evidencing compliance with the transient employer financial assurance law, unless exempt pursuant to the provisions of Section 285.230 RSMo.

15. General Independent Contractor Clause. This agreement does not create an employee/employer relationship between the parties. It is the parties' intention that the Engineer will be an independent contractor and not the City's employee for all purposes, including, but not limited to, the application of the Fair Labor Standards Act minimum wage and overtime payments, Federal Insurance Contribution Act, the Social Security Act, the Federal Unemployment Tax Act, the provisions of the Internal Revenue Code, Missouri revenue and taxation laws, Missouri workers' compensation and unemployment insurance laws. The Engineer will retain sole and absolute discretion in the judgment of the manner and means of carrying out the Engineer's activities and responsibilities hereunder. The Engineer agrees that it is a separate and independent enterprise from the public employer, that it has a full opportunity to find other business, that it has made its own investment in its business, and that it will utilize a high level of skill necessary to perform the work. This agreement shall not be construed as creating any joint employment relationship between the Engineer and the City, and the City will not be liable for any obligation incurred by the Engineer, including but not limited to unpaid minimum wages and/or overtime premiums.

16. City Benefits. The Engineer shall not be entitled to any of the benefits established for the employees of the City nor be covered by the Worker's Compensation Program of the City.

17. Liability and Indemnity. The parties mutually agree to the following:

a. The Engineer shall defend, indemnify, and hold the City harmless from and against all damages, losses, liabilities, expenses, and costs with respect to all claims, including, but not limited to, claims for personal injuries, wrongful death, and damages to property, which may be asserted against the City by any person or entity as the result of Engineer's (or any of Engineer's subcontractors) negligent acts, errors, or omissions in the course of the performance of this contract, provided that the Engineer is not obligated to indemnify or hold harmless the City from the City's own negligence or wrong doing.

b. The Engineer shall indemnify and hold the City harmless from all wages or overtime compensation due its employees in rendering services pursuant to this agreement, including payment of reasonable attorneys' fees and costs in the defense of any claim made under the Fair Labor Standards Act or any other federal or state law.

c. In no event shall the City be liable to the Engineer for special, indirect, or consequential damages, except those caused by the City's gross negligence or willful or wanton misconduct arising out of or in any way connected with a breach of this contract. The maximum liability of the City shall be limited to the amount of money to be paid or received by the City under this contract.

18. Ownership of Documents. All files and information will be submitted before or upon final approval and acceptance of the contract documents. All documents, including original drawings, calculations, computer runs, field notes, drawings, estimates, specifications, written design criteria and written reports are and remain the property of the Engineer until such time as this Agreement is, for any reason, terminated, at which time they become the property of the City. The Engineer shall furnish to the City,

one set of reproducible record Mylars of drawings, AutoCAD files and copies of estimates, specifications, written reports, and written design criteria, in consideration of which the City will use them fully in connection with the project and will not sell them.

19. Notices. All notices required or permitted hereinunder and required to be in writing may be given by FAX or by first class mail addressed to City and Engineer at the addresses shown above. The date of delivery of any notice given by mail shall be the date falling on the third day after the day of its mailing. The date of delivery of notice by FAX transmission shall be deemed to be the date transmission occurs, except where the transmission is not completed by 5:00 p.m. on a regular business day at the terminal of the receiving party, in which case the date of delivery shall be deemed to fall on the next regular business day for the receiving party.

20. Jurisdiction. This agreement and every question arising hereunder shall be construed or determined according to the laws of the State of Missouri. Should any part of this agreement be litigated, venue shall be proper only in the Circuit Court of Jasper County, Missouri.

21. Entire Agreement. This agreement contains the entire agreement of the parties. No modification, amendment, or waiver of any of the provisions of this agreement shall be effective unless in writing specifically referring hereto, and signed by both parties.

IN WITNESS WHEREOF, the parties hereto have set their hands and seals on the day and year herein stated.

REVIEWED FOR APPROVAL

_____
Name & Title of Staff Project Manager

CERTIFICATE OF DIRECTOR OF FINANCE

I certify that the expenditure contemplated by this document is within the purpose of the appropriation to which it is to be charged and that there is an unencumbered balance of appropriated and available funds to pay therefore.

_____
Leslie Haase, Director of Finance

APPROVED AS TO FORM

_____
Peter Edwards, City Attorney

Engineer: Allgeier, Martin and Associates, Inc.

By: _____

Printed Name: Chris Erisman

Title: First Vice President

Date: _____

CITY OF JOPLIN, MISSOURI

By: _____
David Hertzberg, P.E.
Public Works Director

Date: _____

CITY		ENGINEER	
CITY OF JOPLIN 602 S. MAIN STREET JOPLIN, MO 64801		Name: Allgeier, Martin and Associates, Inc. Address: 7231 East 24th Street, P.O. Box 2627 Joplin, MO 64804	
Attention: Mr. Chris Parker, P.E. Sanitary Sewer Engineer		Attention: Chris Erisman, P.E.	
Department: Public Works		Phone: 417-680-7200	Fax: 417-680-7300
Phone: 417-624-0820, ex 584	Fax: 417-625-4738	Project: Baker's Branch Interceptor Improvements	

WORK AUTHORIZATION NUMBER AMA-OC-020-001
TO AGREEMENT FOR PROFESSIONAL ENGINEERING CONSULTING SERVICES

City and Engineer agree to amend their Agreement for Professional Engineering Consulting Services to include a scope of work and fees for engineering services, by adding the following terms to their Agreement.

1. Services. The City agrees to engage the services of the Engineer and the Engineer agrees to perform the services hereinafter set forth in connection with projects described in Exhibit A.

2. Addition to Services. The City may add to the Engineer services or delete therefrom activities of a similar nature to those set forth in Exhibit A, provided that the total cost of such work does not exceed the total cost allowance as specified in Paragraph 5 hereof. The Engineer shall undertake such changed activities only upon the direction of the City. All such directives and changes shall be in written form and prepared and approved by the City and shall be accepted and countersigned by the Engineer.

3. Term. The services of the Engineer shall commence as soon as practicable after the execution of this contract, unless otherwise directed in writing, and shall be undertaken and completed in such sequence as to assure their expeditious completion in the light of the purposes of the contract, but in any event, all of the services required hereunder shall be completed as set forth in the schedule for the project which is attached hereto as Exhibit A.

4. Costs not to Exceed. The City of Joplin is limited by law with respect to the amount of money it can pay. Therefore, the City has established a fixed sum for this contract, which cannot be exceeded unless this contract is amended. The Engineer providing services hereunder shall be required to keep track of the amount of hours billable under this contract at all times; and any work in excess of the fixed sum shall not be eligible for payment. The Engineer shall notify the City if Engineer anticipates that the contract amount may be exceeded, in order to determine whether or not the City is prepared to increase the total compensation. The Engineer shall establish a billing system showing the amount of money remaining on the contract, which shall be shown in each monthly billing.

5. Payment.

a. Conditioned upon acceptable performance. The City agrees to pay the Engineer in accordance with the terms set forth in Exhibit A, which shall constitute complete compensation for all services to be rendered under this contract; provided, that where payments are to be made periodically to Engineer for services rendered under this contract, the City expressly reserves the right to disapprove in whole or in part a request for payment where the services rendered during the period for which payment is claimed are not performed in a timely and satisfactory manner in accordance with the schedule and description of services set forth in Exhibit A.

b. Total compensation not to exceed. It is expressly understood that in no event will the total compensation and reimbursement to be paid to the Engineer under the terms of this work Authorization Number AMA-OC-020-001 exceed the sum of One Hundred Fifty -Six Thousand Eight Hundred Dollars ($156,800).

6. Insurance. Without limiting any of the other obligations or liabilities of the Engineer, the Engineer shall secure and maintain at its own cost and expense, throughout the duration of this Contract and until the work is completed and accepted by the City of Joplin, insurance of such types and in such amounts as may be necessary to protect it and the interests of the City of Joplin against all hazards or risks of loss as hereunder specified or which may arise out of the performance of the Contract Documents. The form and limits of such insurance, together with the underwriter thereof in each case, are subject to approval by the City of Joplin. Regardless

of such approval, it shall be the responsibility of the Engineer to maintain adequate insurance coverage at all times during the term of the Contract. Failure of the Engineer to maintain coverage shall not relieve it of any contractual responsibility or obligation or liability under the Contract Documents.

The certificates of insurance, including evidence of the required endorsements hereunder or the policies, shall be filed with the City at the time that this contract is signed by the Engineer. All insurance policies shall provide thirty (30) days written notice to be given by the insurance company in question prior to modification or cancellation of such insurance. Such notices shall be mailed, certified mail, return receipt requested, to:

City of Joplin - Public Works, 602 S. Main, Joplin, MO 64801; and

Such policies shall name the City as an additional insured with limits of liability not less than the sovereign immunity limits for Missouri public entities calculated by the Missouri Department of Insurance as of January 1 each calendar year and published annually in the Missouri Register pursuant to Section 537.610, RSMo.
(See, http://insurance.mo.gov/industry/sovimmunity.php).

As of January 1, 2020, the minimum coverage for the insurance referred to herein shall be as set out below:

a. Workers' Compensation....Statutory coverage per RSMo 287.010 et seq.
Employer's Liability..... $1,000,000.00

b. Commercial General Liability Insurance, including coverage for Contractual Liability and Independent Contractors Liability. Such coverage shall apply to bodily injury and property damage on an "Occurrence Form Basis" with limits of Two Million Nine Hundred Five Thousand Six Hundred Sixty-four and no/100 Dollars ($2,905,664.00 for all claims arising out of a single accident or occurrence and at least Four Hundred Thirty-five Thousand Eight Hundred Forty-Nine and no/100 Dollars ($435,849.00) with respect to injuries and/or death of any one person in a single occurrence and an amount not less than at least $1,000,000 for all claims to property arising out of a single occurrence and at least $100,000 to any one owner with respect to damages to property. Engineer agrees that the proceeds of such insurance policy shall first be used to pay any award, damages, costs, and/or attorneys' fees incurred by or assessed against City, its employees, officers and agents, before payment of any award, damages, costs or attorneys fees of Engineer, its employees, officers or agents. Engineer agrees to cause its insurer to name City as an additional insured on such insurance policy, including the City as an additional insured for coverage under its products-completed operations hazard, and said policy shall be primary and noncontributory.

c. Automobile Liability Insurance covering bodily injury and property damage for owned, non-owned and hired vehicles, with limits of at least Two Million Nine Hundred Five Thousand Six Hundred Sixty-four and no/100 Dollars ($2,905,664.00 for all claims arising out of a single accident or occurrence and at least Four Hundred Thirty-five Thousand Eight Hundred Forty-Nine and no/100 Dollars ($435,849.00) with respect to injuries and/or death of any one person in a single accident or occurrence.

d. Errors and Omissions Insurance. The Engineer shall maintain a professional liability insurance policy in the amount of $1,000,000.00. This policy shall remain in full force and effect for a period of one year after completion and acceptance by the City of the construction of the project.

e. Subcontracts. In case any or all of this work is sublet, the Engineer shall require the subcontractor to procure and maintain all insurance required in subparagraphs (A), (B) and (C) hereof and in like amounts. Engineer shall require any and all subcontractors with whom it enters into a contract to perform work on this project to protect the City of Joplin through insurance against applicable hazards or risks and shall, upon request of the City, provide evidence of such insurance.

f. Notice. The Engineer and/or subcontractor shall furnish the City prior to beginning the work satisfactory proof of carriage of all the insurance required by this contract, with the provision that policies shall not be canceled, modified or non-renewed without thirty (30) days written notice to the City of Joplin.

g. Legislative or Judicial Changes. In the event the scope or extent of the City's tort liability as a governmental entity as described in Section 537.600 through 537.650 RSMo is broadened or increased during the term of this agreement by legislative or judicial action, the City may require Engineer, upon 10 days written notice, to execute a contract addendum whereby the Engineer agrees to provide, at a price not exceeding Engineer's actual increased premium cost, additional liability insurance coverage as the City may require to protect the City from increased tort liability exposure as the result of such legislative or judicial action. Any such additional insurance coverage shall be evidenced by an appropriate certificate of insurance and shall take effect within the time set forth in the addendum.

7. All other terms and conditions of the original Agreement shall remain in effect.

IN WITNESS WHEREOF, the parties hereto have set their hands and seals on the day and year herein stated.

REVIEWED FOR APPROVAL

_____
Name & Title of Staff Project Manager

CERTIFICATE OF DIRECTOR OF FINANCE

I certify that the expenditure contemplated by this document is within the purpose of the appropriation to which it is to be charged and that there is an unencumbered balance of appropriated and available funds to pay therefore.

_____
Leslie Haase, Director of Finance

APPROVED AS TO FORM

_____
Peter Edwards, City Attorney

Engineer: Allgeier, Martin and Associates, Inc.

By: _____

Printed Name: Chris Erisman

Title: First Vice President

Date: _____

CITY OF JOPLIN, MISSOURI

By: _____
David Hertzberg, P.E.
Public Works Director

Date: _____

EXHIBIT A TO WORK AUTHORIZATION NUMBER AMA-OC-020-001 TO AGREEMENT FOR PROFESSIONAL ENGINEERING CONSULTING SERVICES (Between the City of Joplin, Missouri and Allgeier, Martin and Associates, Inc. for Engineering Services Associated with the Baker's Branch Interceptor Line Improvements)

1. SERVICES

Engineer shall provide the City of Joplin, hereinafter referred to as OWNER, with the following services:

1.1 General

1.1.1 ENGINEER shall perform professional planning, design, property acquisition, bidding, construction phase and resident project representation services as hereinafter stated which include customary civil engineering services.

1.1.2 Coordinate the planning, design and construction of the sanitary sewer project with the OWNER.

1.1.3 In general, the Project consists of the following:

1.1.3.1 Project area is generally east of Florida Avenue, north of Turkey Creek and west of Rangeline Road in Joplin, MO-near and within Water's Edge Subdivision.

1.1.3.2 Design of sanitary sewer line and associated manhole renovations within the project area boundary including the preparation of plans and specifications necessary to bid and construct said work. It is estimated that approximately 3,700 LF of new 27-inch diameter sanitary sewer main and associated appurtenances will be part of the project.

1.1.3.3 Bidding and Construction Phase Engineering for installation of the said new sanitary sewer line and manholes within the project area boundary.

1.1.3.4 Resident Construction Representation Phase services for the completion of the selected sanitary sewer line improvements. Services will be provided part time with an estimated construction duration of 5 months.

1.1.3.5 Right-of-Way/Easement Acquisition services for the project, if desired by the OWNER. It is estimated that up to 3 separate properties will need easements/right-of-way acquired in order to construct the project.

1.2 Planning and Design Phases.

ENGINEER shall provide the following planning and design services for the project, as follows:

1.2.1 Meet with OWNER and OWNER's representatives to discuss recommendations, project expectations, alternate routes and costs.

1.2.3 Conduct topographic surveys to the extent necessary for design of the project facilities.

1.2.4 Conduct research and investigation into existing utilities located within the project boundaries.

1.2.5 Prepare preliminary design documents consisting of final design criteria and preliminary drawings, and review same with OWNER.

1.2.6 Based on the information contained in the preliminary design documents, submit to the OWNER an opinion of probable project costs.

1.2.7 On the basis of the accepted preliminary design documents and the opinion of probable project cost, prepare for incorporation in the contract documents final drawings and specifications to show the character and extent of the Project.

1.2.8. Advise OWNER of any adjustments to the latest opinion of probable Project cost caused by changes in extent or design requirements of the Project or construction costs and furnish a revised opinion of probable Project cost based on the drawings and specifications.

1.2.9. Compile for review and approval by OWNER, his legal counsel and other advisors contract agreement forms, general conditions, supplementary conditions, bid forms, invitations to bid and instructions to bidders, and assist in the preparation of other related documents.

1.2.10. Furnish three copies of the above documents and present and review them in person with OWNER.

1.3 Bidding and Construction Phase

Following approval of the design documents by the OWNER, ENGINEER shall assist in the bidding phase for this project described, as follows:

1.3.1 Assist OWNER in advertising and obtaining bids for construction of the Project. Develop and distribute invitations to bid to contractors, plan houses, etc. Provide interested contractors and suppliers with copies of the plans and specifications as requests are made.

1.3.2 Consult with and advise OWNER as to the acceptability of substitute materials and equipment proposed by contractor(s) when substitution prior to the award of contracts is allowed by the bidding documents.

1.3.3 Respond to pre-bid questions, provide clarifications, review pre-bid submittal, prepare any necessary addenda, and oversee the opening of bids.

1.3.4 Assist OWNER in opening and evaluating bids or proposals and in assembling and awarding contract.

1.3.5 Schedule and assist with a project pre-construction conference.

1.3.6 Review and approve (or take other appropriate action in respect of) shop drawings (as that term is defined in the standard general conditions) and samples, the results of tests and inspections and other data which the contractor is required to submit, but only for conformance with the design concept of the Project and compliance with the information given in the contract documents (but such review and approval or other action shall not extend to means, methods, sequences, techniques, or procedures of construction or to safety precautions and programs incident thereto); determine the acceptability of substitute materials and equipment proposed by contractor(s); and receive and review (for general content as required by the Specifications) maintenance and operating instructions, schedules, guarantees, bonds and certificates of inspection which are to be assembled by contractor in accordance with the contract documents.

1.3.7 Issue all instructions of OWNER to contractor(s); issue necessary interpretations and clarifications of the contract documents and in connection therewith prepare change orders as required; have authority, as OWNER's representative, to require special inspection or testing of the work; act as initial interpreter of the requirements of the contract documents and judge of the acceptability of the work thereunder and make decisions on all claims of OWNER and contractor(s) relating to the acceptability of the work or the interpretation of the requirements of the contract documents pertaining to the execution and progress of the work; but ENGINEER shall not be liable for the results of any such interpretations or decisions rendered by him in good faith.

1.3.8 Conduct site visits as necessary to answer questions which may arise as to design concepts.

1.3.9 Based on ENGINEER's on-site observations as an experienced and qualified design professional and on review of applications for payment and the accompanying data and schedules, determine the amounts owing to contractor and recommend in writing payments to contractor in such amounts. Such recommendations of payment will constitute a representation to OWNER, based on such observations and review, that the work has progressed to the point indicated: that, to the best of ENGINEER's knowledge, information, and belief, the quality of such work is in accordance with the contract documents (subject to an evaluation of such work as a functioning Project upon substantial completion, to the results of any subsequent tests called for in the contract documents, and to any qualifications stated in his recommendation); and that payment of the amount recommended is due contractor(s). But by recommending any payment, ENGINEER will not thereby be deemed to have represented that continuous or exhaustive examinations have been made by ENGINEER to check the quality or quantity of the work or to review the means, methods, sequences, techniques, or procedures of construction or safety precautions or programs incidental thereto; or that ENGINEER has made an examination to ascertain how or for what purposes any contractor has used the moneys paid on account of the contract price; or that title to any of the work, materials, or equipment has passed to OWNER free and clear of any lien, claims, security interests or encumbrances; or that contractor(s) have completed their work exactly in accordance with the contract documents.

1.3.10 Conduct site observation periodically to determine if the Project is substantially complete and conduct a final site review to determine if the work has been completed substantially in accordance with the contract documents and if each contractor has fulfilled all of his obligations thereunder so that ENGINEER may recommend, in writing, final payment to each contractor and may give written notice to OWNER and the contractor(s) that the work is acceptable (subject to any conditions therein expressed); but any such recommendation and notice shall be subject to the limitations expressed in paragraph 1.3.9.

1.3.11 Provide the OWNER with one set of record prints of drawings showing those changes made during the construction process, based on the marked-up prints, drawings, and other data furnished by the contractor to ENGINEER and which ENGINEER considers significant.

1.3.14 ENGINEER shall not be responsible for the acts or omissions of any contractor, or subcontractor, or any of the contractor(s)' or subcontractors' agents or employees, or any other persons (except ENGINEER's own employees and agents) at the site, or otherwise performing any of the contractor(s)' work; however, nothing contained in paragraph 1.3.1 through 1.3.11, inclusive, shall be construed to release ENGINEER from liability for failure to properly perform duties set forth in this contract.

1.4 Resident Project Representation.

1.4.1 At the OWNER’s discretion, ENGINEER may be requested to furnish a resident project representative (RPR), assistants, and other field staff to assist ENGINEER in observing performance of the work of the contractor. If the ENGINEER is asked to provide an RPR for the project, it is through the more extensive on-site observations of the work in progress and field checks of materials and equipment by the RPR and assistants, that ENGINEER shall endeavor to provide further protection for OWNER against defects and deficiencies in the work of contractor; but the furnishing of such services will not make ENGINEER responsible for or give ENGINEER control over construction means, methods, techniques, sequences or procedures or for safety precautions or programs, or responsibility for contractor's failure to perform the work in accordance with the contract documents.

1.4.1.1 If the OWNER requests that ENIGNEER provide a resident project representative, said RPR is ENGINEER's agent at the site, will act as directed by and under the supervision of ENGINEER, and will confer with ENGINEER regarding RPR's actions. RPR's dealings in matters pertaining to the on-site work shall in general be with ENGINEER and contractor, keeping OWNER advised as necessary. RPR's dealings with subcontractors shall only be through or with the full knowledge and approval of contractor. RPR shall generally communicate with OWNER with the knowledge of and under the direction of ENGINEER.

1.4.1.2 If the OWNER elects to exclude resident project representation from the scope of this contract, and instead provide that service with its own personnel, the OWNER’s RPR shall act as the OWNER’s agent at the site, and will confer with ENGINEER regarding RPR’s actions. RPR’s dealings in matters pertaining to the on-site work shall continue to be in general with the ENGINEER and contractor,

keeping the OWNER advised. It is intended that the duties and responsibilities, as well as the limitations of authority, set forth in Sections 1.4.2 and 1.4.3 of this contract, are applicable regardless of which party provides the RPR.

1.4.2. Duties and Responsibilities of RPR.

1.4.2.1 Schedules: Review the progress schedule, schedule of shop drawing submittals, and schedule of values prepared by contractor and consult with ENGINEER concerning acceptability.

1.4.2.2 Conferences and Meetings: Attend meetings with contractor, such as preconstruction conferences, progress meetings, job conferences, and other project-related meetings.

1.4.2.3 Liaison:

a) Serve as ENGINEER's liaison with contractor, working principally through contractor's superintendent and assist in understanding the intent of the contract documents; and assist ENGINEER in serving as OWNER's liaison with contractor when contractor's operations affect OWNER's on-site operations.

b) Assist in obtaining from OWNER additional details or information required for proper execution of the work.

1.4.2.4 Shop Drawings and Samples:

a) Record date of receipt of shop drawings and samples.

b) Receive samples that are furnished at the site by contractor, and notify ENGINEER of availability of samples for examination.

c) Advise ENGINEER and contractor of the commencement of any work requiring a shop drawing or sample if the submittal has not been approved by ENGINEER.

1.4.2.5 Review of Work, Rejection of Defective Work, Inspections and Tests:

a) Conduct on-site observations of the work in progress to assist ENGINEER in determining if the work is in general proceeding in accordance with the contract documents.

b) Report to ENGINEER whenever RPR believes that any work is unsatisfactory, faulty, or defective or does not conform to the contract documents, or has been damaged, or does not meet the requirements of any inspection, test, or approval required to be made; and advise ENGINEER of work that RPR believes should be corrected or rejected or should be uncovered for observation, or requires special testing, inspection, or approval.

c) Verify that tests, equipment, and systems startups and operating and maintenance training are conducted in the presence of appropriate personnel, and that contractor maintains adequate records thereof; and observe, record, and report to ENGINEER appropriate details relative to the test procedures and startups.

d) Accompany visiting inspectors representing public or other agencies having jurisdiction over the Project, record the results of these inspections, and report to ENGINEER.

1.4.2.6 Interpretation of Contract Documents: Report to ENGINEER when clarifications and interpretations of the contract documents are needed and transmit to contractor clarifications and interpretations as issued by ENGINEER.

1.4.2.7 Modifications: Consider and evaluate contractor's suggestions for modifications in

drawings or specifications and report with RPR's recommendations to ENGINEER. Transmit to contractor decisions as issued by ENGINEER.

1.4.2.8 Records:

a) Maintain orderly files for correspondence, reports of job conferences, shop drawings and samples, reproductions of original contract documents including all work directive changes, addenda, change orders, field orders, additional drawings issued subsequent to the execution of the contract, ENGINEER's clarifications and interpretations of the contract documents, progress reports, and other project related documents.

b) Keep a diary or log book, recording contractor hours on the job site, weather conditions, data relative to questions of work directive changes, change orders, or changed conditions, list of job site visitors, daily activities, decisions, observations in general and specific observations in more detail as in the case of observing test procedures; and send copies to ENGINEER.

c) Record names, addresses, and telephone numbers of all contractors, subcontractors, and major suppliers of materials and equipment.

1.4.2.9 Reports:

a) Furnish ENGINEER with periodic reports, as required, of progress of the work and of contractor's compliance with the progress schedule and schedule of shop drawings and sample submittals.

b) Consult with ENGINEER in advance of scheduled major tests, inspections, or start of important phases of the work.

c) Draft proposed change orders and work directive changes, obtaining backup material from contractor and recommend to ENGINEER change orders, work directive changes, and field orders.

d) Report immediately to ENGINEER and OWNER upon the occurrence of any accident.

1.4.2.10 Payment Requests: Review applications for payment with contractor for compliance with the established procedure for their submission, and forward with recommendations to ENGINEER, noting particularly the relationship of the payment requested to the schedule of values, work completed, and materials and equipment delivered at the site but not incorporated in the work.

1.4.2.11 Certificates, Maintenance, and Operation Manuals: During the course of the work, verify that certificates, maintenance, and operation manuals and other data required to be assembled and furnished by contractor are applicable to the items actually installed and in accordance with the contract documents, and have this material delivered to ENGINEER for review and forwarding to OWNER prior to final payment for the work.

1.4.2.12 Completion:

a) Before ENGINEER issues a certificate of substantial completion, submit to contractor a list of observed items requiring completion or correction.

b) Conduct final inspection in the company of ENGINEER, OWNER, and contractor, and prepare a final list of items to be completed or corrected.

c) Observe that all items on final list have been completed or corrected and make recommendations to ENGINEER concerning acceptance.

1.4.3 Limitations of Authority. Resident project representative:

1.4.3.1 Shall not authorize any deviation from the contract documents or substitution of materials or equipment, unless authorized by ENGINEER.

1.4.3.2 Shall not exceed limitations of ENGINEER's authority as set forth in the Agreement or the contract documents, however this clause shall not diminish the authority of the RPR, and in the event either party becomes aware of a possible conflict, the parties will meet and confer and resolve the problems reasonably.

1.4.3.3 Shall not undertake any of the responsibilities of contractor, subcontractors, or contractor's superintendent, however this clause shall not diminish the authority of the RPR, and in the event either party becomes aware of a possible conflict, the parties will meet and confer and resolve the problems reasonably.

1.4.3.4 Shall not advise on, issue directions relative to, or assume control over any aspect of the means, methods, techniques, sequences, or procedures of construction unless such advice or directions are specifically required by the contract documents however this clause shall not diminish the authority of the RPR and in the event either party becomes aware of a possible conflict, the parties will meet and confer and resolve the problems reasonably.

1.4.3.5 Shall not advise on, issue directions regarding, or assume control over safety precautions and programs in connection with the work.

1.4.3.6 Shall not accept shop drawing or sample submittals from anyone other than contractor.

1.4.3.7 Shall not authorize OWNER to occupy the project in whole or in part.

1.4.3.8 Shall not participate in specialized field or laboratory tests or inspections conducted by others except as specifically authorized by ENGINEER.

1.5 Right-of-Way/Easement Acquisition

ENGINEER shall provide the following services in association with Right-of-Way/Easement Acquisition services as follows:

1.5.1 Review and understand right of way and engineering construction plans.

1.5.2 Attend public meetings on proposed projects at the request of city staff.

1.5.3 Set up and maintain right of way acquisition file for each parcel.

1.5.4 Send appropriate notices to property owners as required by funding source and city policy.

1.5.5 Prepare legal documents using standard right-of-way and easement forms.

1.5.6 If an appraisal is found to be necessary, review appraisal information and send certified letter of offer to each property owner.

1.5.6.1 Property appraisals shall be completed by an appraiser as selected by the OWNER and not be included as part of this scope of work. Any required appraisals, if determined necessary, may be provided by the ENGINEER, at the direction of the OWNER, as an additional service.

1.5.7 Contact owners and arrange on site or office meetings to review project or compensation details.

1.5.8 Prepare a detailed Negotiation's Report for each property. Report will include property owner information, all contacts, attempted contacts, or other related activity.

1.5.9 Review counter offers, special requests or conditions with project manager.

1.5.10 Once an agreement has been reached, consultant will obtain signatures and provide notary services for each required document.

1.5.11 Signed documents shall be forwarded to the OWNER for appropriate approval, payment processing, and recording.

1.5.12 Arrange for payments, if any, by the OWNER to property owners in exchange for said easements. ENGINEER shall deliver said payment to property owner.

1.5.13 In the event that negotiation for easements is unsuccessful after three attempts, provide to the OWNER a prepared report of negotiations and the remainder of the file to allow the OWNER to decide the course of future action.

1.5.14 Attend commissioners viewing, testify in court during condemnation proceedings as directed by legal department. Court testimony or attendance at meetings required or requested as part of the condemnation process shall be provided by the ENGINEER as an additional service.

1.5.15 The right-of-way/easements shall be procured in accordance with the requirements of the Uniform Relocation Act.

2. TERMS

2.1 The services of the Engineer shall begin as soon as a written Notice to Proceed is provided by the OWNER. Preparation of design plans, contract documents, and specifications to bid project shall be completed and submitted to OWNER 5 months after the receipt of the Notice to Proceed. Bidding, Construction Phase and Inspection are anticipated to be based upon an anticipated 5-month construction time period. Right-of-Way/Easement Acquisition efforts, if determined necessary, shall begin immediately upon receipt of Notice To Proceed.

2.2 Distribution of compensation between individual tasks indicated in Section 3 may be altered as necessary to be consistent with services actually rendered, but shall not exceed the total estimated compensation amount unless approved in writing by the OWNER.

3. PAYMENT

3.1 Payment to Engineer shall be at the hourly labor Rates and Non-Labor Rates set forth in the attachment Number One to Exhibit A: "RATE SCHEDULE 2020"; with a total compensation ceiling of $156,800, as set forth in Work Authorization Number AMA–OC-020-001 to the Agreement for Professional Engineering Consulting Services, Section 5.b. with the estimated maximum fees broken down for respective services in more detail as follows:

Task		Estimated Fee
Standard Project Engineering Services		
Planning and Design Phase Engineering Services (Paragraphs 1.1.3.2 and 1.2)	$50,000	
Bidding and Construction Phase Engineering Services (Paragraphs 1.1.3.3 and 1.3)	$25,000	
Right-of-Way/Easement Acquisition (Paragraphs 1.1.3.5 and 1.5)	$9,800	
Subtotal Standard Project Engineering Services		$84,800
Additional Project Engineering Services		
Resident Project Representation Services (Paragraphs 1.1.3.4 and 1.4)		$72,000
Total Estimated Maximum Fee – All Services		$156,800

4. SUMMARY OF ATTACHMENTS

Attachment Number 1 Rate Schedule

ATTACHMENT NUMBER ONE

RATE SCHEDULE

2020

ALLGEIER, MARTIN and ASSOCIATES, INC.

Consulting Engineers and Surveyors

LABOR RATES

HOURLY LABOR RATES

Classification	01/01/2020 thru 12/31/2020
Principal/Engineer V	$224
Principal/Engineer IV	$203
Principal/Engineer III	$187
Project Manager/Engineer II	$166
Project Manager/Engineer I	$151
Technician III/GIS Specialist	$137
Technician III	$116
Technician II	$104
Technician I	$98
Two-Man GPS Survey Crew	$192
One-Man GPS Survey Crew	$151
Three-Man Survey Crew	$209
Two-Man Survey Crew	$166
Registered Land Surveyor II	$177
Registered Land Surveyor I	$156
Survey Crew Member	$79
Right of Way Specialist	$121
Project Representative III	$116
Project Representative II	$104
Project Representative I	$96
Secretary/Assistant	$79
Print Specialist	$79

Note: All pre-approved overtime hours shall be invoiced at 1 ½ times the hourly billing rates shown above

---

NON–LABOR RATES

Item	Rate
Travel	$0.57 per mile (or current IRS rate)
Subsistence	Actual Cost
Lodging	Actual cost
Special Postage or Shipping	Actual cost
Printing	Actual cost
Surveying Materials	Actual cost
Subcontract Specialty Services	Cost + 10%
Deposition & Court Testimony	Standard Hourly Billing Rate x 2

EXHIBIT MAP - Work Authorization AMA-OC20-001
Baker's Branch Interceptor Replacement Project

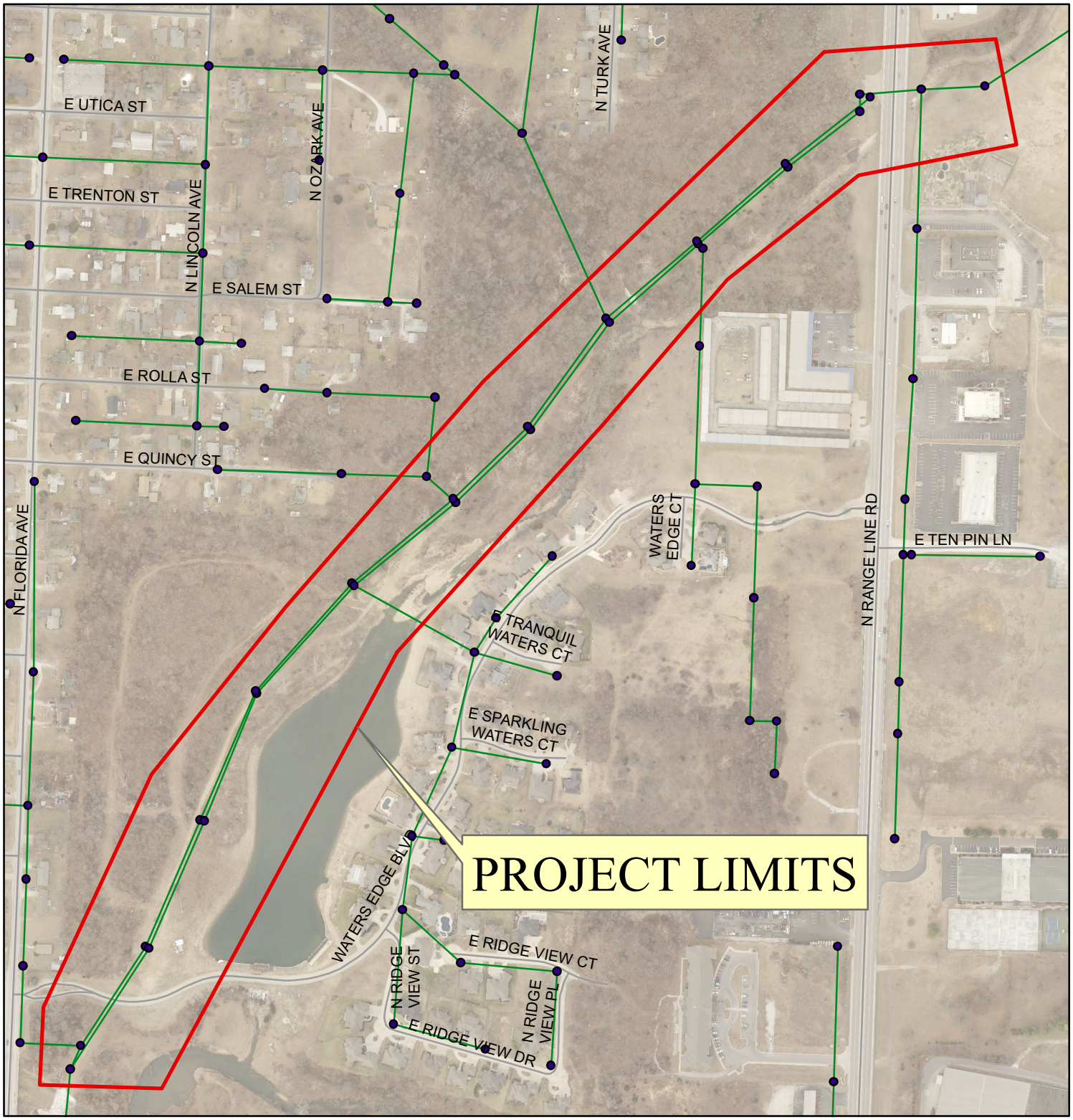

COUNCIL BILL NO. 2020-105 **ORDINANCE NO**

AN ORDINANCE approving an agreement and a work authorization with Allgeier, Martin and Associates, Inc. in the not to exceed amount of One Hundred Fifty-Six Thousand Eight Hundred and No/100 Dollars ($156,800.00) for the Baker's Branch Interceptor Replacement Project; and authorizing the City Manager or his designee to execute the same by and on behalf of the City of Joplin; and containing an emergency clause.

BE IT ORDAINED BY THE COUNCIL OF THE CITY OF JOPLIN, as follows:

Section 1. That the said agreement and work authorization by and between the City of Joplin and Allgeier, Martin and Associates, Inc. in the not to exceed amount of One Hundred Fifty-Six Thousand Eight Hundred and No/100 Dollars ($156,800.00), a true and accurate copy of said agreement and work authorization being attached hereto; be and the same is hereby approved.

Section 2. That the City Manager of the City of Joplin, Missouri, or his designee, is hereby authorized and directed to execute said agreement and work authorization, or agreement and work authorization in substantially similar form, by and on behalf of the City of Joplin.

Section 3. That upon the final approval and acceptance of the consultant's work under said contract, in substantial conformance with the attached agreement and work authorization, in writing by the Director of Public Works and his certification to the effect to the Director of Finance, the consultant shall be paid from the Wastewater Treatment Fund.

Section 4. That the City hereby declares that this Ordinance dealing with a public improvement, is an emergency within the meaning of Section 2.12 (6) of the Home Rule Charter of the City of Joplin, Missouri, and as such, this Ordinance shall become effective immediately upon its passage.

Passed by the Council of the City of Joplin, Missouri, this _____ day of

_____, 2020 by a _____ vote.

_____

ATTEST: Gary L. Shaw, Mayor

_____

Barbara J. Gollhofer, City Clerk

APPROVED AS TO FORM:

_____

Peter C. Edwards, City Attorney

COUNCIL BILL 2020-105

I hereby certify that a sufficient amount is available in the Wastewater Fund to pay the amounts called for in the referenced Work Authorization.

_____

Leslie Haase, Director of Finance

CITY OF JOPLIN
COUNCIL AGENDA ITEM

ITEM
Council Bill 2020-106
Joplin Streets Mill and Overlay 2020
Construction Agreement for Mill and Overlay

MEETING DATE
February 3, 2020

ORIGINATING DEPARTMENT
Public Works

REVIEWED BY
Director of Public Works – David Hertzberg, Director of Finance – Leslie Haase, City Attorney – Peter C. Edwards, Interim City Manager – Dan Pekarek

SUMMARY
This Council Bill approves a construction agreement with Blevins Asphalt Construction, Co., Inc. for the milling and overlaying of streets in the not to exceed amount of Nine Hundred Thirty-Two Thousand Two Hundred Fifty-Six and 07/100 Dollars, ($932,256.07)

BACKGROUND
City staff annually evaluates the pavement conditions of the City street system and recommends streets that need improvements. City staff determines which streets are to be resurfaced through a selection process based on traffic counts, street classifications, structural integrity and ride quality. Streets or parking lots may be added or deleted from this list. The Annual Resurfacing Project Budget provides for these street needs. Street resurfacing consists of a 2-inch milling and asphalt overlay.

City staff prepared bid documents for the project. Staff followed the City's procurement policy for advertising of said project. Two construction companies submitted bids (see attached Bid Tabulation), that were opened on January 21, 2020. Blevins Asphalt Construction, Co., Inc. was the low bidder. The base bid from Blevins Asphalt Construction, Co., Inc. was lower than the engineer's estimate. City staff evaluated the bids and chose to award the base bid as the best fit within the budget.

FUNDING SOURCE
These payments are included in the FY 2019-20 budget; Transportation Sales Tax Fund

RECOMMENDATION
Staff recommends adoption of this Council Bill on an Emergency basis; being an ordinance relating to a public improvement is an emergency within the meaning of Section 2.12(6) of the HOME RULE CHARTER of the City of Joplin, Missouri and the Council hereby declares that this ordinance shall be in full force and effect from and after its passage. Specifically, this ordinance approves construction to begin immediately in the optimal construction time during the calendar year, and appropriations for this contract have been approved in the 2019-2020 budget.

ATTACHMENTS

CB2020-106 Ordinance; Bid Tabulation, Construction Agreement, Location Maps

AGREEMENT
BETWEEN
CITY OF JOPLIN AND BLEVINS ASPHALT

CITY		CONTRACTOR	
CITY OF JOPLIN **602 S. MAIN STREET** **JOPLIN, MO 64801**		Name: Blevins Asphalt Construction, Co., Inc. Address: P.O. Box 230 Mt. Vernon, MO 65712	
Attention: Dakota Rusk		Attention:	
Department: Engineering		Phone:	Fax:
Phone: (417) 624-0820 ext:598	Fax: (417) 625-4738		

THIS AGREEMENT, made and entered into this ____ day of _____, 20____, by the parties identified above.

WITNESSETH: That whereas, the Contractor has become the lowest responsible bidder for furnishing the supervision, labor, tools, equipment, materials and supplies and for constructing the following City improvements:

Joplin Street Mill and Overlay 2020

The City and Contractor agree to the following:

1. Manner and Time for Completion. The Contractor will furnish all supervision, labor, tools, equipment, materials and supplies necessary to perform, and to perform said work at Contractor's own expense in accordance with the contract documents and any applicable City ordinances and state and federal laws by June 30, 2020 from the date Contractor is ordered to proceed, which order shall be issued by the Director of Public Works within 30 days after the date of this contract.

2. Prevailing Wages. All labor utilized in the construction of the aforementioned improvements shall be paid a wage of no less than the "prevailing hourly rate of wages" for work of a similar character in this locality, as established and amended at any time by the Department of Labor and Industrial Relations of the State of Missouri. At any time the contractor is found to not have paid prevailing wages, the contractor shall forfeit as a penalty to the city one hundred dollars for each underpaid worker employed, for each calendar day, or portion thereof such worker is paid less than the said stipulated rates for any work done under this contract.

3. Insurance Requirements. Without limiting any of the other obligations or liabilities of the Contractor, the Contractor shall secure and maintain at its own cost and expense, throughout the duration of this Contract and until the work is completed and accepted by the City of Joplin, insurance of such types and in such amounts as may be necessary to protect it and the interests of the

City of Joplin against all hazards or risks of loss as hereunder specified or which may arise out of the performance of the Contract Documents. The form and limits of such insurance, together with the underwriter thereof in each case, are subject to approval by the City of Joplin. Regardless of such approval, it shall be the responsibility of the contractor to maintain adequate insurance coverage at all times during the term of the Contract. Failure of the Contractor to maintain coverage shall not relieve it of any contractual responsibility or obligation or liability in general or under the Contract Documents.

The certificates of insurance, including evidence of the required endorsements hereunder or the policies, shall be filed with the City within ten (10) days after the date of the receipt of Notice of Award of the Contract to the Contractor and prior to the start of work. All insurance policies shall require that the insurance company in question provide thirty (30) days written notice prior to modification or cancellation of such insurance. Such notices shall be mailed, certified mail, return receipt requested, to:

City of Joplin - Public Works, 602 S. Main Street, Joplin, MO 64801

Such policies shall name the City as an additional insured, with limits of liability not less than the sovereign immunity limits for Missouri public entities calculated by the Missouri Department of Insurance as of January 1 each calendar year and published annually in the Missouri Register pursuant to Section 537.610, RSMo. (See, http://insurance.mo.gov/industry/sovimmunity.php)

As of January 1, 2020, the minimum coverage for the insurance referred to herein shall be as set out below:

a. Workers' Compensation…. Statutory coverage per RSMo 287.010 et seq

Employer's Liability……. $1,000,000.00

b. Commercial General Liability Insurance, including coverage for Premises, Operations, Products and Completed Operations, Contractual Liability, Broad Form Property Damage, Independent Contractors, Explosion, Collapse, and Underground Property Damage and endorsed for blasting if blasting required. Such coverage shall apply to bodily injury and property damage on an "Occurrence Form Basis" with limits of at least Two Million Nine Hundred and Five Thousand Six Hundred and Sixty Four and no/100 Dollars ($2,905,664.00) for all claims arising out of a single accident or occurrence and at least Four Hundred Thirty Five Thousand Eight Hundred and Forty Nine and no/100 Dollars ($435,849.00) with respect to injuries and/or death of any one person in a single occurrence and an amount not less than at least $1,000,000 for all claims to property arising out of a single occurrence and at least $100,000 to any one owner with respect to damages to property. Contractor agrees that the proceeds of such insurance policy shall first be used to pay any award, damages, costs, and/or attorneys' fees incurred by or assessed against City, its employees, officers and agents, before payment of any award, damages, costs or attorneys' fees of Contractor, its employees, officers or agents. Contractor agrees to cause its insurer to name City as an additional insured on such insurance policy, including the City as an additional insured for coverage under its products-completed operations hazard, and said policy shall be primary and noncontributory.

c. Automobile Liability Insurance covering bodily injury and property damage for owned, non-owned and hired vehicles, with limits of at least Two Million Nine Hundred and Five Thousand Six Hundred and Sixty Four and no/100 Dollars ($2,905,664.00) for all claims arising out of a single accident or occurrence and at least Four Hundred Thirty Five Thousand Eight Hundred and Forty Nine and no/100 Dollars ($435,849.00) with respect to injuries and/or death of any one person in a single accident or occurrence.

d. Owner's and Contractor's Protective Liability Insurance to protect the City, its agents, servants and employees from claims which may arise from the performance of this Contract, with limits of at least Two Million Nine Hundred and Five Thousand Six Hundred and Sixty Four and no/100 Dollars ($2,905,664.00) for all claims arising out of a single accident or occurrence and at least Four Hundred Thirty Five Thousand Eight Hundred and Forty Nine and no/100 Dollars ($435,849.00) with respect to injuries and/or death of any one person in a single accident or occurrence.

The Owner's and Contractor's Protective Liability Insurance must:

(1) Be a separate policy with the named insured being: The City of Joplin, and

(2) Contain an endorsement that disclaims coverage for any claim barred by the doctrines of sovereign immunity or official immunity, except attorney's fees and other litigation costs incurred in defending a claim. Nothing contained in this policy (or this endorsement thereto) shall constitute any waiver of whatever kind of these defenses or sovereign immunity or official immunity for any monetary amount whatsoever.

e. Builders Risk Insurance for contracts involving unoccupied structures. The Contractor shall secure All Risk Builder's Risk Insurance. Unless specifically authorized by the City, the amount of such insurance shall not be less than the total contract price.

f. Subcontracts. In case any or all of this work is sublet, the Contractor shall require the subcontractor to procure and maintain all insurance required in subparagraphs (a), (b) and (c) hereof and in like amounts. Contractor shall require any and all subcontractors with whom it enters into a contract to perform work on this project to protect the City of Joplin through insurance against applicable hazards or risks and shall, upon request of the City, provide evidence of such insurance.

g. Notice. The Contractor and/or subcontractor shall furnish the City prior to beginning the work, the policy as specified in subparagraph (d), and satisfactory proof of carriage of all the insurance required by this contract, with the provision that policies shall not be canceled, modified or non-renewed without thirty (30) days written notice to the City of Joplin.

h. Legislative or Judicial Changes. In the event the scope or extent of the City's tort liability as a governmental entity as described in Section 537.600 through 537.650 RSMo is broadened or increased during the term of this agreement by legislative or judicial action, the City may require Contractor, upon 10 days written notice, to execute a contract addendum whereby the Contractor agrees to provide, at a price not exceeding Contractor's actual increased premium cost, additional liability insurance coverage as the City may require to protect the City from increased tort liability exposure as the result of such legislative or judicial action. Any such additional insurance coverage shall be evidenced by an appropriate certificate of insurance and shall take effect within the time set forth in the addendum.

4. Performance, Labor, and Materials Payment Bond: The Contractor shall furnish a Performance Bond and a Labor and Materials Payment Bond with surety approved by the City and on the forms approved by the City, each bond shall be in the amount of $Nine Hundred Thirty-Two Thousand Two Hundred Fifty-Six and 07/100 Dollars, ($932,256.07) conditioned upon the full and faithful performance of all major terms and conditions of this contract and payment of all labor and material suppliers. It is further mutually agreed between the parties hereto that if at any time after the execution of this agreement and the surety bond(s) hereto attached for its faithful performance and payment of labor and material suppliers, the City shall deem the surety or sureties upon such bond(s) to be unsatisfactory, or if, for any reason, such bond(s) ceases to be adequate to cover the performance of the work, the Contractor shall, at its expense, within five (5) days after the receipt of notice from the City to do so, furnish an additional bond or bonds, in such form and amount, and with such surety or sureties as shall be satisfactory to the City. In such event no further payment to the Contractor shall be deemed to be due under this contract until such new or additional security for the faithful performance of the work and the payment of labor and material suppliers shall be furnished in a manner and form satisfactory to the City. The corporate surety on any performance or payment bond must be licensed by the State of Missouri and if the required bond exceeds $25,000.00 must be listed in United States Treasury Circular 570.

5. Certification Regarding Disbarment, Eligibility, Indictments, Convictions or Civil Judgements for all Federal Aid Projects: By signing and submitting the bid, the president or authorized official of the bidder, under penalty of perjury under the laws of the USA, shall certify that, except as noted in the exceptions, the company or any person associated therewith in the capacity of owner, partner, director, officer, principal investor, project director, manager, auditor or any position involving the administration of federal funds:
(Reference can be made to "The System for Award Management" website as a helpful resource).

a. Is not currently under suspension, debarment, voluntary exclusion or determination of ineligibility by any federal agency.

b. Has not been suspended, debarred, voluntarily excluded or determined ineligible by any federal agency within the past three years.

c. Does not have a proposed debarment or suspension pending.

d. Has not been indicted, convicted or had a civil judgment rendered against any of the listed parties by a court of competent jurisdiction in any matter involving fraud or official misconduct within the past three years.

5.1 If there are any exceptions, the bidder shall submit the exceptions on company letterhead, signed by the bidder and inserted inside the bid submitted. Exceptions will not necessarily result in denial of award, but will be considered in determining bidder responsibility. For any exception noted, the bidder shall indicate to whom it applies, the

initiating agency, and dates of action. Providing false information may result in criminal prosecution or administrative sanctions.

5.2 By signing the contract, the contractor shall further certify that all related subcontracts of $25,000 shall comply with this requirement. This includes all subcontractors, material suppliers and vendors.

6. Contractor's responsibility for subcontractors. The Contractor shall be as fully responsible to the City for the acts and omissions of its subcontractors, and of persons either directly or indirectly employed by them, as Contractor is for the acts and omissions of persons it directly employs. Contractor shall cause appropriate provisions to be inserted in all subcontracts relating to this work, to bind all subcontractors to Contractor by all the terms herein set forth, and insofar as applicable to the work of subcontractors and to give Contractor the same power regarding termination of any subcontract as the City may exercise over Contractor under any provisions of this contract. Nothing contained in this contract shall create any contractual relation between the subcontractor and the City or between any subcontractors.

7. General Independent Contractor Clause. This agreement does not create an employee/employer relationship between the parties. It is the parties' intention that the Contractor will be an independent contractor and not the City's employee for all purposes, including, but not limited to, the application of the Fair Labor Standards Act minimum wage and overtime payments, Federal Insurance Contribution Act, the Social Security Act, the Federal Unemployment Tax Act, the provisions of the Internal Revenue Code, Missouri Revenue and Taxation laws, Missouri Workers' Compensation and Unemployment Insurance laws. The Contractor will retain sole and absolute discretion in the judgment of the manner and means of carrying out the Contractor's activities and responsibilities hereunder. The Contractor agrees that it is a separate and independent enterprise from the public employer, that it has a full opportunity to find other business, that it has made its own investment in its business, and that it will utilize a high level of skill necessary to perform the work. This agreement shall not be construed as creating any joint employment relationship between the Contractor and the City, and the City will not be liable for any obligation incurred by the Contractor, including but not limited to unpaid minimum wages and/or overtime premiums.

8. Liquidated Damages. Time of completion of work by the Contractor is of the essence. Should Contractor, or in the case of default, the surety, fail to complete the work within the time specified in the contract, or within such extra time as may be allowed in accordance with City of Joplin Standard Specifications, Division 0000, General Requirements and Provisions, Section 0400.19, (http://mo-joplin.civicplus.com/DocumentCenter/View/3460) Contractor (or surety) shall be liable to the City in the amount of $2,500.00 per day for each and every calendar day and $500.00 for every day in excess of 3 calendar days between milling and paving that the contract remains uncompleted after the time allowed for completion, as liquidated damages, and not as a penalty, it being stipulated that actual damages to the City and the public arising from Contractor's failure to timely complete the work would be difficult, if not impossible, to ascertain. The amount assessed as liquidated damages may be withheld from any moneys otherwise due to Contractor from the City.

9. Termination. The City reserves the right to terminate this contract by giving at least five (5) days prior written notice to the Contractor, without prejudice to any other rights or remedies of the City should the Contractor be adjudged a bankrupt, or if Contractor should make a general assignment for the benefit of its creditors, or if a receiver should be appointed for Contractor or for any of its property, or if Contractor should persistently or repeatedly refuse or fail to supply enough properly skilled workmen or proper material, or if Contractor should refuse or fail to make prompt payment to any person supplying labor or materials for the work under the contract, or persistently disregard instructions of the City or fail to observe or perform any provisions of the contract.

10. City's Right to Proceed. In the event this contract is terminated pursuant to Paragraph 8, then the City may take over the work and prosecute the same to completion, by contract or otherwise, and Contractor and its sureties shall be liable to the City for any costs over the amount of this contract thereby occasioned by the City. In any such case, the City may take possession of, and utilize in completing the work, such materials, appliances and structures as may be on the work site and are necessary for completion of the work. The foregoing provisions are in addition to, and not in limitation of, the rights of the City under any other provisions of the contract, city ordinances, and state and federal laws.

11. Termination for Convenience of City. The City shall have the right at any time by written notice to Contractor to terminate and cancel this contract, without cause, for the convenience of the City, and Contractor shall immediately stop work. In such event City shall not be liable to Contractor except for payment for actual work performed prior to such notice in an amount proportionate to the completed contract price and for the actual costs of preparations made by Contractor for the performance of the cancelled portions of the contract, including a reasonable allowance of profit applicable to the actual work performed and such preparations. Anticipatory profits and consequential damages shall not be recoverable by Contractor.

12. Guards and Lights. The Contractor agrees that during the performance of said work, adequate barricades, guards and warning signs, lights or devices consistent with the requirements contained in the Manual on Uniform Traffic Control Devices shall be provided by Contractor during construction.

13. Liability and Indemnity.

a. In no event shall the City be liable to the Contractor for special, indirect, or consequential damages, except those caused by the City's gross negligence or willful or wanton misconduct arising out of or in any way connected with a breach of this contract. The maximum liability of the City shall be limited to the amount of money to be paid or received by the City under this contract.

b. The Contractor shall defend, indemnify and save harmless the City, its elected or appointed officials, agents and employees from and against any and all liability, suits, damages, costs (including attorney fees), losses, outlays and expenses from claims in any manner caused by, or allegedly caused by, or arising out of, or connected with, this contract, or the work or any subcontract thereunder (the Contractor hereby assuming full responsibility for relations with subcontractors), including, but not limited to, claims for personal injuries, death, property damage, or for damages from the award of this contract to Contractor, notwithstanding any possible negligence, whether sole or concurrent, on the part of the City, its officials, agents and employees.

c. The Contractor shall indemnify and hold the City harmless from all wages or overtime compensation due any employees in rendering services pursuant to this agreement or any subcontract, including payment of reasonable attorneys' fees and costs in the defense of any claim made under the Fair Labor Standards Act, the Missouri Prevailing Wage Law or any other federal or state law.

d. The indemnification obligations of Contractor hereunder shall not be limited by any limitations as to the amount or type of damages, compensation or benefits payable by or for the Contractor, under any federal or state law, to any person asserting the claim against City, its elected or appointed officials, agents and employees, for which indemnification is sought.

e. The indemnification obligations herein shall not negate, abridge or reduce in any way any additional indemnification rights of the City, its elected or appointed officials, agents and employees, which are otherwise available under statute, or in law or equity.

f. Contractor affirms that it has had the opportunity to recover the costs of the liability insurance required in this agreement in its contract price. Contractor's obligation under this agreement to defend, indemnify, and hold harmless any person from that person's own negligence or wrongdoing is limited to the coverage and limits of the applicable insurance required of the Contractor under this agreement.

g. The Contractor shall indemnify and hold the City harmless for any penalties, fines, fees or costs, including costs of defense, which are charged or assessed by any Federal, state or local agency including, but not limited to, Environmental Protection Agency or Department of Natural Resources.

14. Payment for Labor and Materials. The Contractor agrees and binds itself to pay for all labor done, and for all the materials used in the construction of the work to be completed pursuant to this contract.

15. Payment. The City will pay the Contractor in accordance with the rate set forth in the contract documents on file in the Public Works Department and by this reference made a part hereof, which shall constitute full and complete compensation for the Contractor's work provided hereunder. Such compensation will be paid in progress payments (less five (5) percent retainage), as established by the City, subject to receipt of a requisition for payment and a statement of work provided by the Contractor and agreement by both the City and the Contractor that the Contractor has fully performed the work to be paid for in such progress payments in conformance with the contract. If the City or the architect or engineer determines that a higher rate of retainage is required to ensure performance of the contract, the City may withhold up to ten (10) percent retainage until the work is fully completed and accepted by the City.

16. Contract Documents. The contract documents shall consist of the following:

a. This Contract
b. All Change Orders
c. Bid Plans and Specifications
d. City of Joplin Standard Specifications (Latest Revised Edition)
e. Special Conditions & Provisions

f. Proposal
g. Statement of Bidder's Qualifications
h. Acknowledgment
i. Performance Bond
h. Payment and Material Bond
k. Instructions to Bidders
l. Non-collusion Affidavit
m. Notice to Proceed

Notice to Contractors: This contract, together with the other documents enumerated in this paragraph, forms the contract between the parties. These documents are as fully a part of the contract as if attached hereto or repeated herein. The Contractor agrees to perform all of the work described in the contract documents and to comply with the terms and conditions defined therein for a total sum of Nine Hundred Thirty-Two Thousand Two Hundred Fifty-Six and 07/100 Dollars, ($932,256.07), said amount being subject to any approved addenda or change order.

17. Subsurface Conditions. Contractor agrees that information contained in the published reports and public actions of the Missouri Division of Geology and Land Survey shall be conclusive and binding upon the Contractor as to what subsurface conditions at the job site are reasonably anticipated or reasonably foreseeable. Contractor acknowledges and agrees that it shall not be entitled to any adjustment in the Contract Sum or Contract Times for any concealed condition of any nature, including but not limited to unknown physical conditions of an unusual nature which differ materially from those ordinarily found to exist and generally recognized as inherent in construction activities of the character provided for in the Contract Documents, in addition to the information contained in the published reports and public actions of the Missouri Division of Geology and Land Survey. Contractor recognizes that it has assumed the risks of concealed conditions and is being compensated for assuming these risks.

18. Conflict of Interest. In accepting this contract, Contractor certifies that no member or officer of its firm or corporation is an officer or employee of the City of Joplin, Missouri, or any of its boards or agencies, and further that no officer or employee of the City has any financial interest, direct or indirect, in this contract. All applicable federal regulations and provisions of R.S.Mo. Section 105.450 et seq. shall not be violated.

19. Assignment. The Contractor shall not assign any interest in this contract, and shall not transfer any interest in the same (whether by assignment or novation), without prior written consent of the City thereto, provided, however, that claims for money due or to become due to the Contractor from the City under this Contract may be assigned to a bank, trust company, or other financial institution without such approval. Notice of such assignment or transfer shall be furnished in writing promptly to the City and the bond surety. Any such assignment is expressly subject to all rights and remedies of the City under this agreement, including the right to change or delete activities from the Contract or to terminate the same as provided herein, and no such assignment shall require the City to give any notice to any such assignee of any actions which the City may take under this agreement.

20. Nondiscrimination. The Contractor agrees in the performance of this contract not to discriminate on the ground or because of race, creed, color, national origin or ancestry, sex, religion, handicap, age, status as a protected veteran or status as a qualified individual with a disability, or political opinion or affiliation, against any employee of Contractor or applicant for employment and shall include a similar provision in all subcontracts let or awarded hereunder. The parties hereby incorporate the requirements of 41 C.F.R. §§ 60-1.4(a)(7), 29 C.F.R. Part 471, Appendix A to Subpart A, 41 C.F.R. § 60-300.5(a)ii and 41 C.F.R. § 60-741.5(a), if applicable.

a. This contractor and subcontractor shall abide by the requirements of 41 C.F.R. § 60-300.5(a). This regulation prohibits discriminations against qualified protected veterans, and requires affirmative action by covered prime contractors and subcontractors to employ and advance in employment qualified protected veterans.

b. This contractor and subcontractor shall abide by the requirements of 41 C.F.R. § 60-741.5(a). This regulation prohibits discrimination against qualified individuals on the basis of disability, and requires affirmative action by covered prime contractors and subcontractors to employ and advance in employment qualified individuals with disabilities.

21. Nonresident/Foreign Contractors. The Contractor shall procure and maintain during the life of this contract:

a. If the Contractor is a foreign corporation, a certificate of authority to transact business in the State of Missouri from the Secretary of State, unless exempt pursuant to the provisions of Section 351.570 R.S.Mo.

b. A certificate from the Missouri Director of Revenue evidencing compliance with the transient employer financial assurance law, unless exempt pursuant to the provisions of Section 285.230 RSMo.

22. Notices. All notices required or permitted hereinunder and required to be in writing may be given by FAX or by first class mail addressed to City and Contractor at the addresses shown above. The date of delivery of any notice given by mail shall be the date falling on the second full day after the day of its mailing. The date of delivery of notice by FAX transmission shall be deemed to be the date transmission occurs, except where the transmission is not completed by 5:00 p.m. on a regular business day at the terminal of the receiving party, in which case the date of delivery shall be deemed to fall on the next regular business day for the receiving party.

23. Records and Audits. The Contractor shall maintain accounts and records, including personnel, property, and financial records, adequate to identify and account for all costs pertaining to the Contract and such other records as may be deemed necessary by the City to assure proper accounting for all project funds. These records will be made available for audit purposes to the City or any authorized representative, and will be retained for three years after the expiration of this Contract.

24. Authorized Employees. Contractor acknowledges that Section285.530, RSMo, prohibits any business entity or employer from knowingly employing, hiring for employment, or continuing to employ an unauthorized alien to perform work within the State of Missouri. Contractor therefore covenants that is not knowingly in violation of subsection 1 or Section 285.530, RSMo, and that it will not knowingly employ, hire for employment, or continue to employ any unauthorized aliens to perform work on the Project, and that its employees are lawfully to work in the United States.

25. Interest of Contractor and Employees. The Contractor covenants that he/she presently has no interest and shall not acquire interest, direct or indirect, in the study area or any parcels therein or any other interest which would conflict in any manner or degree with the performance of his services hereunder. The Contractor further covenants that in the performance of this Contract, no person having any such interest shall be employed.

26. Interest of Members of a City. No member of the governing body of the City and no other officer, employee, or agent of the City who exercises any functions or responsibilities in connection with the planning and carrying out of the program, shall have any personal financial interest, direct or indirect, in this Contract, and the Contractor shall take appropriate steps to assure compliance.

27. Interest of Other Local Public Officials. No member of the governing body of the locality and no other public official of such locality, who exercises any functions or responsibilities in connection with the planning and carrying out of the program, shall have any personal financial interest, direct or indirect, in this Contract, and the Contractor shall take appropriate steps to assure compliance.

28. Affidavit for Contracts Over $5,000.00. That pursuant to Missouri Revised Statute Sections 285.525 through 285.550, if this contract exceeds the amount of $5,000.00 and Contractor is associated with a business entity, Contractor shall provide an acceptable notarized affidavit stating that the associated business entity is enrolled in and participates in a federal work authorization program with respect to the employees working in connection with the contracted services, and that said business entity does not knowingly employ any person who is an unauthorized alien in connection with the contracted services. Additionally, Contractor must provide documentation for said business entity evidencing current enrollment in a federal work authorization program.

29. City Benefits. The Contractor shall not be entitled to any of the benefits established for the employees of the City nor be covered by the Worker's Compensation Program of the City.

30. Occupational License: The Contractor shall obtain and maintain an occupational license with the City of Joplin, Missouri, if required by city code and any required state or federal license. The cost for this occupational license shall be borne by the Contractor. No contract will be executed by the City until this occupational license has been obtained and that the Contractor is current on any City taxes is verified.

31. Safety Training. Pursuant to Missouri Revised Statute Section 292.675, Contractors and subcontractors who sign a contract to work on public works projects must provide a 10-hour OSHA construction safety program, or similar program approved by the Department of Labor and Industrial Relations, to be completed by their on-site employees within sixty (60) days of beginning work on the construction project. Contractors and subcontractors in violation of this provision will forfeit to the public body $2,500 plus $100 a day for each employee who is employed without training. Public bodies and contractors may withhold/assess these penalties from the payment due to those contractors and subcontractors if found to be in non-compliance.

32. Compliance with Laws. Contractor agrees to comply with all applicable federal, state and local laws or rules and regulations applicable to the provision of services and products hereunder. Contractor affirmatively states that payment of all local, state, and federal taxes and assessments owed by Contractor is current.

33. Entire Agreement. This agreement contains the entire agreement of the parties. No modification, amendment, or waiver of any of the provisions of this agreement shall be effective unless in writing specifically referring hereto, and signed by both parties.

34. Remedies. Except as may be otherwise found in the contract documents, all claims, disputes, counter-claims, and other matters in question between the Owner and Contractor arising out of or related to this agreement or the breech thereof, will be decided by arbitration if the parties hereto mutually agree, or in a court of competent jurisdiction within the state in which the Owner is located.

35. Jurisdiction. This agreement and every question arising hereunder shall be construed or determined according to the laws of the State of Missouri. Should any part of this agreement be adjudicated, venue shall be proper only in the Circuit Court of Jasper County, Missouri.

IN WITNESS WHEREOF, the parties hereto have set their hands and seals on the day and year herein stated.

CONTRACTOR:

By: _____

Printed Name: _____

Title: _____

CERTIFICATE OF DIRECTOR OF FINANCE

I certify that the expenditure contemplated by this document is within the purpose of the appropriation to which it is to be charged and that there is an unencumbered balance of appropriated and available funds to pay therefor.

_____

Leslie Haase, Director of Finance

APPROVED AS TO FORM

_____

Peter Edwards, City Attorney

CITY OF JOPLIN, MISSOURI

By: _____

David Hertzberg, Public Works Director

BID TABULATION

PROJECT: Mill and Overlay 2020

DATE OF BID OPENING: January 21, 2020

CONTRACTOR	BID
Emery Sapp & Sons – Base Bid	$987,775.99
Blevins Asphalt – Base Bid	$932,256.07
Engineer's Estimate – Base Bid	$948,391.39
Emery Sapp & Sons – Alt 1	$100,793.63
Blevins Asphalt – Alt 1	$98,962.75
Engineer's Estimate – Alt 1	$92,283.93
Emery Sapp & Sons – Alt 2	$121,612.28
Blevins Asphalt – Alt 2	$121,891.86
Engineer's Estimate – Alt 2	$91,939.40
Emery Sapp & Sons – Total	$1,210,181.92
Blevins Asphalt – Total	$1,153,110.68
Engineer's Estimate – Total	$1,132,614.72

Mill and Overlay

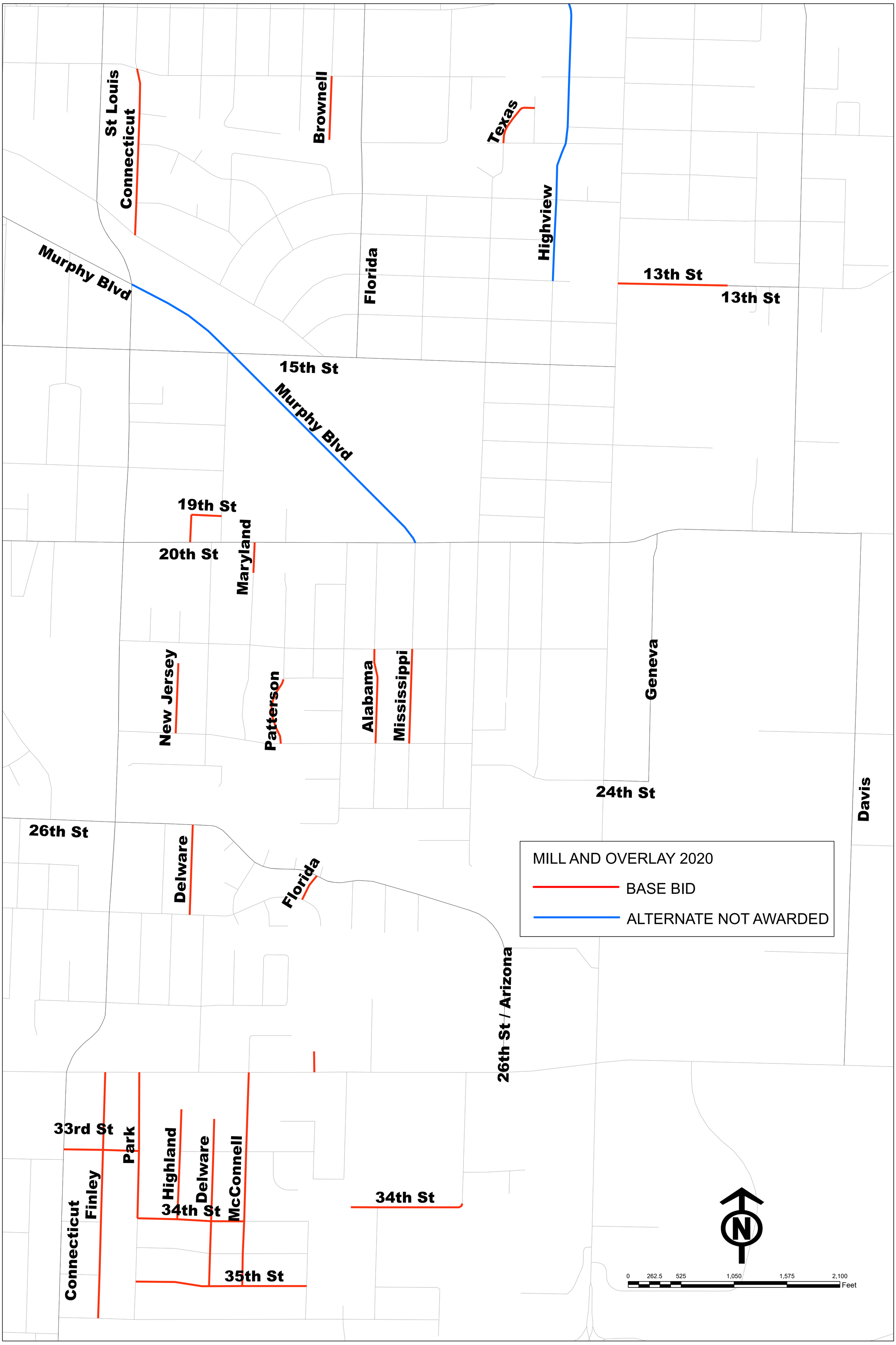

Parking Lots 2020

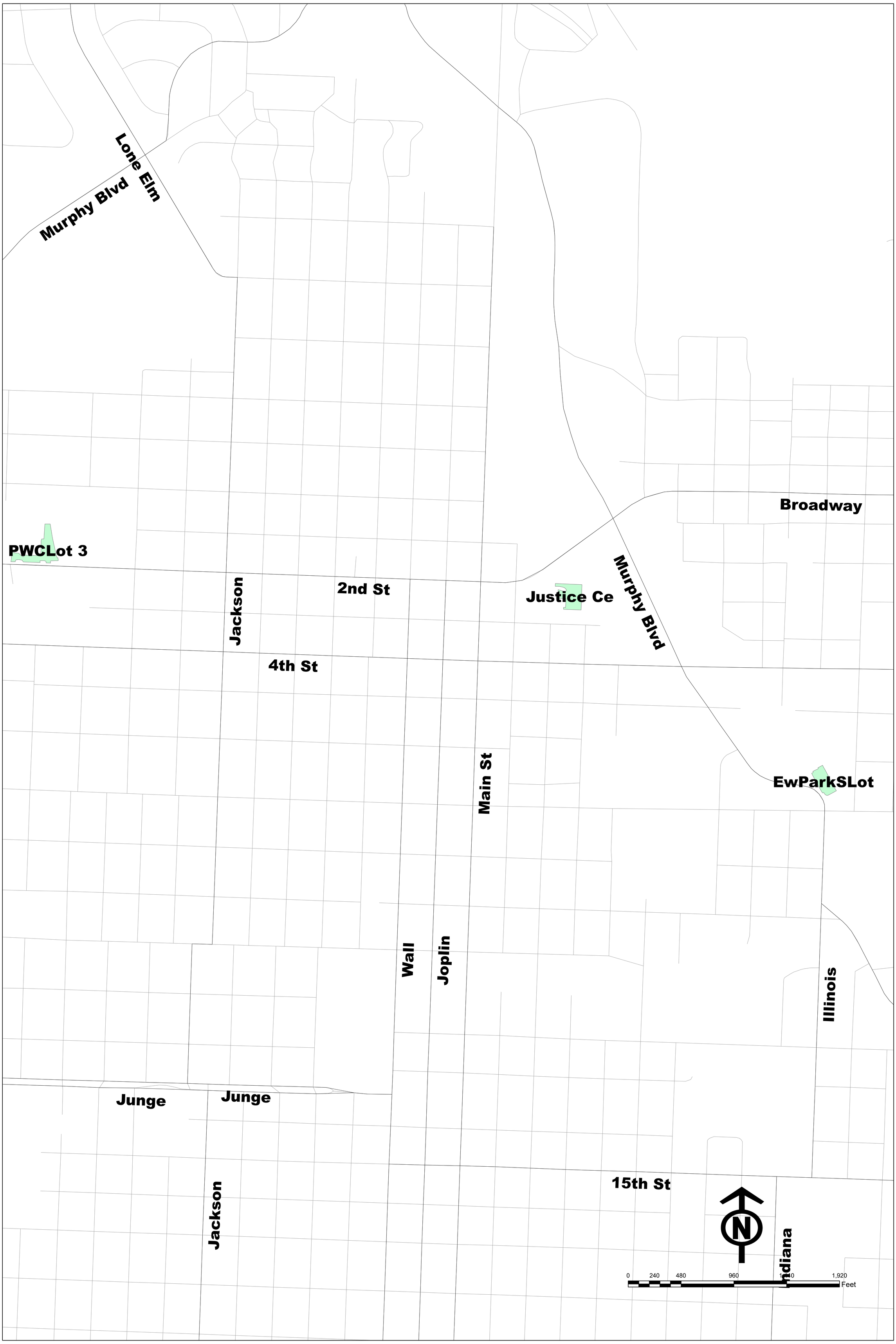

COUNCIL BILL NO. 2020-106 ORDINANCE NO

AN ORDINANCE approving a construction agreement with Blevins Asphalt Construction, Co., Inc. for street milling and overlaying in the not to exceed amount Nine Hundred Thirty-Two Thousand Two Hundred Fifty-Six and 07/100 Dollars, ($932,256.07) for the 2020 Mill and Overlay project and containing an emergency clause.

BE IT ORDAINED BY THE COUNCIL OF THE CITY OF JOPLIN, as follows:

Section 1. That the agreement with Blevins Asphalt Construction, Co., Inc. for street milling and overlaying in the not to exceed amount of Nine Hundred Thirty-Two Thousand Two Hundred Fifty-Six and 07/100 Dollars, ($932,256.07) in the City of Joplin, a copy of which is attached hereto; be the same and is hereby approved.

Section 2. That the City Manager of the City of Joplin, Missouri or his designee, is hereby authorized and directed to execute said agreement, or agreement in substantially similar form, by and on behalf of the City of Joplin.

Section 3. That upon the final approval and acceptance of the contractor's work under said contract, in substantial conformance with the attached exhibits, in writing by the Director of Public Works, and his certification to that effect to the Director of Finance, the contractor shall be paid out of the Transportation Sales Tax, appropriations having been approved in the 2019-2020 city budget.

Section 4. That the City of Joplin declares that this ordinance relating to a public improvement is an emergency within the meaning of Section 2.12(6) of the HOME RULE CHARTER of the City of Joplin, Missouri and the Council hereby declares that this ordinance shall be in full force and effect from and after its passage.

Passed by the Council of the City of Joplin, Missouri, this _____ day of

_____, 2020 by a _____ vote.

_____

ATTEST: Gary L. Shaw, Mayor

_____

Barbara J. Gollhofer, City Clerk

APPROVED AS TO FORM:

_____

Peter C. Edwards, City Attorney

Council Bill 2020-106

I hereby certify that a sufficient amount is available in Transportation Sales Tax to pay the amounts called for on the basis of the bids received by the City Engineer.

_____

Leslie Haase, Director of Finance

CITY OF JOPLIN
COUNCIL AGENDA ITEM

ITEM
Council Bill 2020-107
Microsurfacing of Various Streets 2020
Construction Agreement for Microsurfacing

MEETING DATE
February 3, 2020

ORIGINATING DEPT
Public Works

REVIEWED BY
Director of Public Works – David Hertzberg, Director of Finance – Leslie Haase. City Attorney – Peter C. Edwards, Interim City Manager – Dan Pekarek

SUMMARY
This Council Bill approves a construction agreement with Vance Brothers Inc. for the microsurfacing of streets in the not to exceed amount of Seven Hundred Eighteen Thousand Nine Hundred Ninety and 14/100 Dollars ($718,990.14).

BACKGROUND
As a part of the annual street maintenance program, the City provides preventive maintenance on asphalt streets on a seven year cycle. The Street Slurry Seal projects have been a major part of this seven-year preventive maintenance program since 1982. In 2004, staff chose to use Microsurfacing over the Type II Slurry Seal used in the past. Microsurfacing sets up more quickly and is more durable. This allows roads to be opened up to the public in a shorter time frame.

City staff prepared bid documents for the project. Staff followed the City's procurement policy for advertising of said project. One company submitted bids (see attached Bid Tabulation), that were opened on January 21, 2020. Vance Brothers was the low bidder and the bid was below the Engineer's estimate. Staff evaluated the bid and chose to award the base bid and alternates 1,3,4,5 and 6 as the best fit within the budget.

FUNDING SOURCE
These payments are included in the FY 2019-20 in the Transportation Sales Tax Fund.

RECOMMENDATION
Staff recommends adoption of this Council Bill on an Emergency basis; being an ordinance relating to a public improvement is an emergency within the meaning of Section 2.12(6) of the HOME RULE CHARTER of the City of Joplin, Missouri and the Council hereby declares that this ordinance shall be in full force and effect from and after its passage. Specifically, this ordinance approves construction to begin immediately in the optimal construction time during the calendar year, and appropriations have been approved in the 2019-2020 city budget.

ATTACHMENTS
CB 2020-107 Ordinance, Bid Tabulation, Construction Agreement, Location map

Microsurfacing 2020

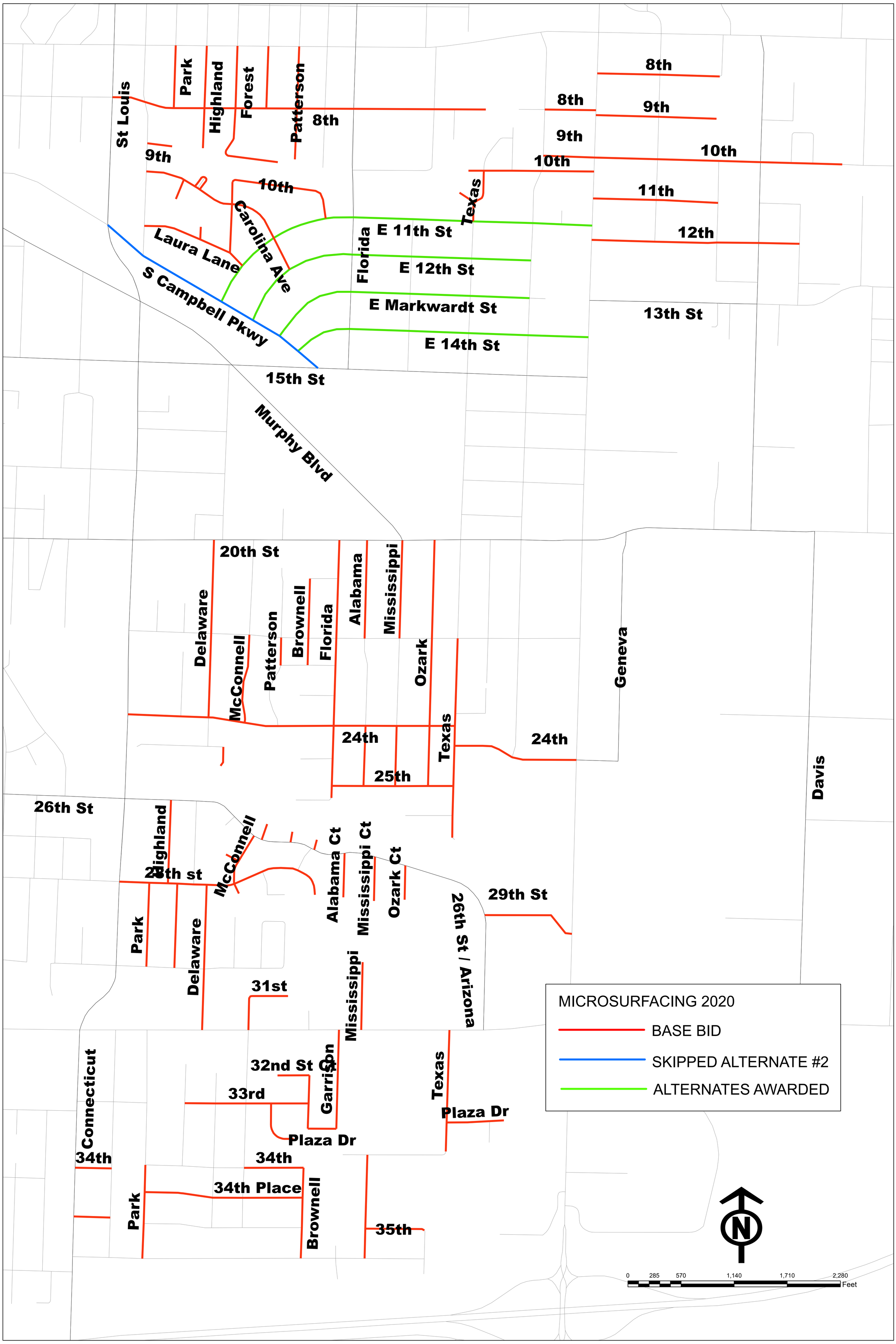

AGREEMENT
BETWEEN
CITY OF JOPLIN AND VANCE BROTHERS

CITY		CONTRACTOR	
CITY OF JOPLIN **602 S. MAIN STREET** **JOPLIN, MO 64801**		Name: Vance Brothers Inc. Address: 5201 Brighton Kansas City, MO 64130	
Attention: Dakota Rusk Traffic Engineer		Attention:	
Department: Engineering		Phone:	Fax:
Phone: (417) 624-0820 ext:598	Fax: (417) 625-4738		

THIS AGREEMENT, made and entered into this ____ day of _____, 20____, by the parties identified above.

WITNESSETH: That whereas, the Contractor has become the lowest responsible bidder for furnishing the supervision, labor, tools, equipment, materials and supplies and for constructing the following City improvements:

MICROSURFACING 2020

The City and Contractor agree to the following:

1. Manner and Time for Completion. The Contractor will furnish all supervision, labor, tools, equipment, materials and supplies necessary to perform, and to perform said work at Contractor's own expense in accordance with the contract documents and any applicable City ordinances and state and federal laws by June 30, 2020 from the date Contractor is ordered to proceed, which order shall be issued by the Director of Public Works within 30 days after the date of this contract.

~~**2. Prevailing Wages**. All labor utilized in the construction of the aforementioned improvements shall be paid a wage of no less than the "prevailing hourly rate of wages" for work of a similar character in this locality, as established and amended at any time by the Department of Labor and Industrial Relations of the State of Missouri. At any time the contractor is found to not have paid prevailing wages, the contractor shall forfeit as a penalty to the city one hundred dollars for each underpaid worker employed, for each calendar day, or portion thereof such worker is paid less than the said stipulated rates for any work done under this contract.~~

3. Insurance Requirements. Without limiting any of the other obligations or liabilities of the Contractor, the Contractor shall secure and maintain at its own cost and expense, throughout the duration of this Contract and until the work is completed and accepted by the City of Joplin, insurance of such types and in such amounts as may be necessary to protect it and the interests of the

City of Joplin against all hazards or risks of loss as hereunder specified or which may arise out of the performance of the Contract Documents. The form and limits of such insurance, together with the underwriter thereof in each case, are subject to approval by the City of Joplin. Regardless of such approval, it shall be the responsibility of the contractor to maintain adequate insurance coverage at all times during the term of the Contract. Failure of the Contractor to maintain coverage shall not relieve it of any contractual responsibility or obligation or liability in general or under the Contract Documents.

The certificates of insurance, including evidence of the required endorsements hereunder or the policies, shall be filed with the City within ten (10) days after the date of the receipt of Notice of Award of the Contract to the Contractor and prior to the start of work. All insurance policies shall require that the insurance company in question provide thirty (30) days written notice prior to modification or cancellation of such insurance. Such notices shall be mailed, certified mail, return receipt requested, to:

City of Joplin - Public Works, 602 S. Main Street, Joplin, MO 64801

Such policies shall name the City as an additional insured, with limits of liability not less than the sovereign immunity limits for Missouri public entities calculated by the Missouri Department of Insurance as of January 1 each calendar year and published annually in the Missouri Register pursuant to Section 537.610, RSMo. (See, http://insurance.mo.gov/industry/sovimmunity.php)

As of January 1, 2020, the minimum coverage for the insurance referred to herein shall be as set out below:

a. Workers' Compensation…. Statutory coverage per RSMo 287.010 et seq

Employer's Liability……. $1,000,000.00

b. Commercial General Liability Insurance, including coverage for Premises, Operations, Products and Completed Operations, Contractual Liability, Broad Form Property Damage, Independent Contractors, Explosion, Collapse, and Underground Property Damage and endorsed for blasting if blasting required. Such coverage shall apply to bodily injury and property damage on an "Occurrence Form Basis" with limits of at least Two Million Nine Hundred and Five Thousand Six Hundred and Sixty Four and no/100 Dollars ($2,905,664.00) for all claims arising out of a single accident or occurrence and at least Four Hundred Thirty Five Thousand Eight Hundred and Forty Nine and no/100 Dollars ($435,849.00) with respect to injuries and/or death of any one person in a single occurrence and an amount not less than at least $1,000,000 for all claims to property arising out of a single occurrence and at least $100,000 to any one owner with respect to damages to property. Contractor agrees that the proceeds of such insurance policy shall first be used to pay any award, damages, costs, and/or attorneys' fees incurred by or assessed against City, its employees, officers and agents, before payment of any award, damages, costs or attorneys' fees of Contractor, its employees, officers or agents. Contractor agrees to cause its insurer to name City as an additional insured on such insurance policy, including the City as an additional insured for coverage under its products-completed operations hazard, and said policy shall be primary and noncontributory.

c. Automobile Liability Insurance covering bodily injury and property damage for owned, non-owned and hired vehicles, with limits of at least Two Million Nine Hundred and Five Thousand Six Hundred and Sixty Four and no/100 Dollars ($2,905,664.00) for all claims arising out of a single accident or occurrence and at least Four Hundred Thirty Five Thousand Eight Hundred and Forty Nine and no/100 Dollars ($435,849.00) with respect to injuries and/or death of any one person in a single accident or occurrence.

d. Owner's and Contractor's Protective Liability Insurance to protect the City, its agents, servants and employees from claims which may arise from the performance of this Contract, with limits of at least Two Million Nine Hundred and Five Thousand Six Hundred and Sixty Four and no/100 Dollars ($2,905,664.00) for all claims arising out of a single accident or occurrence and at least Four Hundred Thirty Five Thousand Eight Hundred and Forty Nine and no/100 Dollars ($435,849.00) with respect to injuries and/or death of any one person in a single accident or occurrence.

The Owner's and Contractor's Protective Liability Insurance must:

(1) Be a separate policy with the named insured being: The City of Joplin, and

(2) Contain an endorsement that disclaims coverage for any claim barred by the doctrines of sovereign immunity or official immunity, except attorney's fees and other litigation costs incurred in defending a claim. Nothing contained in this policy (or this endorsement thereto) shall constitute any waiver of whatever kind of these defenses or sovereign immunity or official immunity for any monetary amount whatsoever.

e. Builders Risk Insurance for contracts involving unoccupied structures. The Contractor shall secure All Risk Builder's Risk Insurance. Unless specifically authorized by the City, the amount of such insurance shall not be less than the total contract price.

f. Subcontracts. In case any or all of this work is sublet, the Contractor shall require the subcontractor to procure and maintain all insurance required in subparagraphs (a), (b) and (c) hereof and in like amounts. Contractor shall require any and all subcontractors with whom it enters into a contract to perform work on this project to protect the City of Joplin through insurance against applicable hazards or risks and shall, upon request of the City, provide evidence of such insurance.

g. Notice. The Contractor and/or subcontractor shall furnish the City prior to beginning the work, the policy as specified in subparagraph (d), and satisfactory proof of carriage of all the insurance required by this contract, with the provision that policies shall not be canceled, modified or non-renewed without thirty (30) days written notice to the City of Joplin.

h. Legislative or Judicial Changes. In the event the scope or extent of the City's tort liability as a governmental entity as described in Section 537.600 through 537.650 RSMo is broadened or increased during the term of this agreement by legislative or judicial action, the City may require Contractor, upon 10 days written notice, to execute a contract addendum whereby the Contractor agrees to provide, at a price not exceeding Contractor's actual increased premium cost, additional liability insurance coverage as the City may require to protect the City from increased tort liability exposure as the result of such legislative or judicial action. Any such additional insurance coverage shall be evidenced by an appropriate certificate of insurance and shall take effect within the time set forth in the addendum.

4. Performance, Labor, and Materials Payment Bond: The Contractor shall furnish a Performance Bond and a Labor and Materials Payment Bond with surety approved by the City and on the forms approved by the City, each bond shall be in the amount of $Seven Hundred Eighteen Thousand Nine Hundred Ninety and 14/100 Dollars ($718,990.14) conditioned upon the full and faithful performance of all major terms and conditions of this contract and payment of all labor and material suppliers. It is further mutually agreed between the parties hereto that if at any time after the execution of this agreement and the surety bond(s) hereto attached for its faithful performance and payment of labor and material suppliers, the City shall deem the surety or sureties upon such bond(s) to be unsatisfactory, or if, for any reason, such bond(s) ceases to be adequate to cover the performance of the work, the Contractor shall, at its expense, within five (5) days after the receipt of notice from the City to do so, furnish an additional bond or bonds, in such form and amount, and with such surety or sureties as shall be satisfactory to the City. In such event no further payment to the Contractor shall be deemed to be due under this contract until such new or additional security for the faithful performance of the work and the payment of labor and material suppliers shall be furnished in a manner and form satisfactory to the City. The corporate surety on any performance or payment bond must be licensed by the State of Missouri and if the required bond exceeds $25,000.00 must be listed in United States Treasury Circular 570.

5. Certification Regarding Disbarment, Eligibility, Indictments, Convictions or Civil Judgements for all Federal Aid Projects: By signing and submitting the bid, the president or authorized official of the bidder, under penalty of perjury under the laws of the USA, shall certify that, except as noted in the exceptions, the company or any person associated therewith in the capacity of owner, partner, director, officer, principal investor, project director, manager, auditor or any position involving the administration of federal funds:
(Reference can be made to "The System for Award Management" website as a helpful resource).

a. Is not currently under suspension, debarment, voluntary exclusion or determination of ineligibility by any federal agency.

b. Has not been suspended, debarred, voluntarily excluded or determined ineligible by any federal agency within the past three years.

c. Does not have a proposed debarment or suspension pending.

d. Has not been indicted, convicted or had a civil judgment rendered against any of the listed parties by a court of competent jurisdiction in any matter involving fraud or official misconduct within the past three years.

5.1 If there are any exceptions, the bidder shall submit the exceptions on company letterhead, signed by the bidder and inserted inside the bid submitted. Exceptions will not necessarily result in denial of award, but will be considered in determining bidder responsibility. For any exception noted, the bidder shall indicate to whom it applies, the

initiating agency, and dates of action. Providing false information may result in criminal prosecution or administrative sanctions.

5.2 By signing the contract, the contractor shall further certify that all related subcontracts of $25,000 shall comply with this requirement. This includes all subcontractors, material suppliers and vendors.

6. Contractor's responsibility for subcontractors. The Contractor shall be as fully responsible to the City for the acts and omissions of its subcontractors, and of persons either directly or indirectly employed by them, as Contractor is for the acts and omissions of persons it directly employs. Contractor shall cause appropriate provisions to be inserted in all subcontracts relating to this work, to bind all subcontractors to Contractor by all the terms herein set forth, and insofar as applicable to the work of subcontractors and to give Contractor the same power regarding termination of any subcontract as the City may exercise over Contractor under any provisions of this contract. Nothing contained in this contract shall create any contractual relation between the subcontractor and the City or between any subcontractors.

7. General Independent Contractor Clause. This agreement does not create an employee/employer relationship between the parties. It is the parties' intention that the Contractor will be an independent contractor and not the City's employee for all purposes, including, but not limited to, the application of the Fair Labor Standards Act minimum wage and overtime payments, Federal Insurance Contribution Act, the Social Security Act, the Federal Unemployment Tax Act, the provisions of the Internal Revenue Code, Missouri Revenue and Taxation laws, Missouri Workers' Compensation and Unemployment Insurance laws. The Contractor will retain sole and absolute discretion in the judgment of the manner and means of carrying out the Contractor's activities and responsibilities hereunder. The Contractor agrees that it is a separate and independent enterprise from the public employer, that it has a full opportunity to find other business, that it has made its own investment in its business, and that it will utilize a high level of skill necessary to perform the work. This agreement shall not be construed as creating any joint employment relationship between the Contractor and the City, and the City will not be liable for any obligation incurred by the Contractor, including but not limited to unpaid minimum wages and/or overtime premiums.

8. Liquidated Damages. Time of completion of work by the Contractor is of the essence. Should Contractor, or in the case of default, the surety, fail to complete the work within the time specified in the contract, or within such extra time as may be allowed in accordance with City of Joplin Standard Specifications, Division 0000, General Requirements and Provisions, Section 0400.19, (http://mo-joplin.civicplus.com/DocumentCenter/View/3460) Contractor (or surety) shall be liable to the City in the amount of $2,500.00 per day for each and every calendar day that the contract remains uncompleted after the time allowed for completion, as liquidated damages, and not as a penalty, it being stipulated that actual damages to the City and the public arising from Contractor's failure to timely complete the work would be difficult, if not impossible, to ascertain. The amount assessed as liquidated damages may be withheld from any moneys otherwise due to Contractor from the City.

9. Termination. The City reserves the right to terminate this contract by giving at least five (5) days prior written notice to the Contractor, without prejudice to any other rights or remedies of the City should the Contractor be adjudged a bankrupt, or if Contractor should make a general assignment for the benefit of its creditors, or if a receiver should be appointed for Contractor or for any of its property, or if Contractor should persistently or repeatedly refuse or fail to supply enough properly skilled workmen or proper material, or if Contractor should refuse or fail to make prompt payment to any person supplying labor or materials for the work under the contract, or persistently disregard instructions of the City or fail to observe or perform any provisions of the contract.

10. City's Right to Proceed. In the event this contract is terminated pursuant to Paragraph 8, then the City may take over the work and prosecute the same to completion, by contract or otherwise, and Contractor and its sureties shall be liable to the City for any costs over the amount of this contract thereby occasioned by the City. In any such case, the City may take possession of, and utilize in completing the work, such materials, appliances and structures as may be on the work site and are necessary for completion of the work. The foregoing provisions are in addition to, and not in limitation of, the rights of the City under any other provisions of the contract, city ordinances, and state and federal laws.

11. Termination for Convenience of City. The City shall have the right at any time by written notice to Contractor to terminate and cancel this contract, without cause, for the convenience of the City, and Contractor shall immediately stop work. In such event City shall not be liable to Contractor except for payment for actual work performed prior to such notice in an amount proportionate to the completed contract price and for the actual costs of preparations made by Contractor for the performance of the cancelled portions of the contract, including a reasonable allowance of profit applicable to the actual work performed and such preparations. Anticipatory profits and consequential damages shall not be recoverable by Contractor.

12. Guards and Lights. The Contractor agrees that during the performance of said work, adequate barricades, guards and warning signs, lights or devices consistent with the requirements contained in the Manual on Uniform Traffic Control Devices shall be provided by Contractor during construction.

13. Liability and Indemnity.

a. In no event shall the City be liable to the Contractor for special, indirect, or consequential damages, except those caused by the City's gross negligence or willful or wanton misconduct arising out of or in any way connected with a breach of this contract. The maximum liability of the City shall be limited to the amount of money to be paid or received by the City under this contract.

b. The Contractor shall defend, indemnify and save harmless the City, its elected or appointed officials, agents and employees from and against any and all liability, suits, damages, costs (including attorney fees), losses, outlays and expenses from claims in any manner caused by, or allegedly caused by, or arising out of, or connected with, this contract, or the work or any subcontract thereunder (the Contractor hereby assuming full responsibility for relations with subcontractors), including, but not limited to, claims for personal injuries, death, property damage, or for damages from the award of this contract to Contractor, notwithstanding any possible negligence, whether sole or concurrent, on the part of the City, its officials, agents and employees.

c. The Contractor shall indemnify and hold the City harmless from all wages or overtime compensation due any employees in rendering services pursuant to this agreement or any subcontract, including payment of reasonable attorneys' fees and costs in the defense of any claim made under the Fair Labor Standards Act, the Missouri Prevailing Wage Law or any other federal or state law.

d. The indemnification obligations of Contractor hereunder shall not be limited by any limitations as to the amount or type of damages, compensation or benefits payable by or for the Contractor, under any federal or state law, to any person asserting the claim against City, its elected or appointed officials, agents and employees, for which indemnification is sought.

e. The indemnification obligations herein shall not negate, abridge or reduce in any way any additional indemnification rights of the City, its elected or appointed officials, agents and employees, which are otherwise available under statute, or in law or equity.

f. Contractor affirms that it has had the opportunity to recover the costs of the liability insurance required in this agreement in its contract price. Contractor's obligation under this agreement to defend, indemnify, and hold harmless any person from that person's own negligence or wrongdoing is limited to the coverage and limits of the applicable insurance required of the Contractor under this agreement.

g. The Contractor shall indemnify and hold the City harmless for any penalties, fines, fees or costs, including costs of defense, which are charged or assessed by any Federal, state or local agency including, but not limited to, Environmental Protection Agency or Department of Natural Resources.

14. Payment for Labor and Materials. The Contractor agrees and binds itself to pay for all labor done, and for all the materials used in the construction of the work to be completed pursuant to this contract.

15. Payment. The City will pay the Contractor in accordance with the rate set forth in the contract documents on file in the Public Works Department and by this reference made a part hereof, which shall constitute full and complete compensation for the Contractor's work provided hereunder. Such compensation will be paid in progress payments (less five (5) percent retainage), as established by the City, subject to receipt of a requisition for payment and a statement of work provided by the Contractor and agreement by both the City and the Contractor that the Contractor has fully performed the work to be paid for in such progress payments in conformance with the contract. If the City or the architect or engineer determines that a higher rate of retainage is required to ensure performance of the contract, the City may withhold up to ten (10) percent retainage until the work is fully completed and accepted by the City.

16. Contract Documents. The contract documents shall consist of the following:

a. This Contract
b. All Change Orders
c. Bid Plans and Specifications
d. City of Joplin Standard Specifications (Latest Revised Edition)
e. Special Conditions & Provisions
f. Proposal

g. Statement of Bidder's Qualifications
h. Acknowledgment
i. Performance Bond
h. Payment and Material Bond
k. Instructions to Bidders
l. Non-collusion Affidavit
m. Notice to Proceed

Notice to Contractors: This contract, together with the other documents enumerated in this paragraph, forms the contract between the parties. These documents are as fully a part of the contract as if attached hereto or repeated herein. The Contractor agrees to perform all of the work described in the contract documents and to comply with the terms and conditions defined therein for a total sum of Seven Hundred Eighteen Thousand Nine Hundred Ninety and 14/100 Dollars ($718,990.14), said amount being subject to any approved addenda or change order.

17. Subsurface Conditions. Contractor agrees that information contained in the published reports and public actions of the Missouri Division of Geology and Land Survey shall be conclusive and binding upon the Contractor as to what subsurface conditions at the job site are reasonably anticipated or reasonably foreseeable. Contractor acknowledges and agrees that it shall not be entitled to any adjustment in the Contract Sum or Contract Times for any concealed condition of any nature, including but not limited to unknown physical conditions of an unusual nature which differ materially from those ordinarily found to exist and generally recognized as inherent in construction activities of the character provided for in the Contract Documents, in addition to the information contained in the published reports and public actions of the Missouri Division of Geology and Land Survey. Contractor recognizes that it has assumed the risks of concealed conditions and is being compensated for assuming these risks.

18. Conflict of Interest. In accepting this contract, Contractor certifies that no member or officer of its firm or corporation is an officer or employee of the City of Joplin, Missouri, or any of its boards or agencies, and further that no officer or employee of the City has any financial interest, direct or indirect, in this contract. All applicable federal regulations and provisions of R.S.Mo. Section 105.450 et seq. shall not be violated.

19. Assignment. The Contractor shall not assign any interest in this contract, and shall not transfer any interest in the same (whether by assignment or novation), without prior written consent of the City thereto, provided, however, that claims for money due or to become due to the Contractor from the City under this Contract may be assigned to a bank, trust company, or other financial institution without such approval. Notice of such assignment or transfer shall be furnished in writing promptly to the City and the bond surety. Any such assignment is expressly subject to all rights and remedies of the City under this agreement, including the right to change or delete activities from the Contract or to terminate the same as provided herein, and no such assignment shall require the City to give any notice to any such assignee of any actions which the City may take under this agreement.

20. Nondiscrimination. The Contractor agrees in the performance of this contract not to discriminate on the ground or because of race, creed, color, national origin or ancestry, sex, religion, handicap, age, status as a protected veteran or status as a qualified individual with a disability, or political opinion or affiliation, against any employee of Contractor or applicant for employment and shall include a similar provision in all subcontracts let or awarded hereunder. The parties hereby incorporate the requirements of 41 C.F.R. §§ 60-1.4(a)(7), 29 C.F.R. Part 471, Appendix A to Subpart A, 41 C.F.R. § 60-300.5(a)ii and 41 C.F.R. § 60-741.5(a), if applicable.

a. This contractor and subcontractor shall abide by the requirements of 41 C.F.R. § 60-300.5(a). This regulation prohibits discriminations against qualified protected veterans, and requires affirmative action by covered prime contractors and subcontractors to employ and advance in employment qualified protected veterans.

b. This contractor and subcontractor shall abide by the requirements of 41 C.F.R. § 60-741.5(a). This regulation prohibits discrimination against qualified individuals on the basis of disability, and requires affirmative action by covered prime contractors and subcontractors to employ and advance in employment qualified individuals with disabilities.

21. Nonresident/Foreign Contractors. The Contractor shall procure and maintain during the life of this contract:

a. If the Contractor is a foreign corporation, a certificate of authority to transact business in the State of Missouri from the Secretary of State, unless exempt pursuant to the provisions of Section 351.570 R.S.Mo.

b. A certificate from the Missouri Director of Revenue evidencing compliance with the transient employer financial assurance law, unless exempt pursuant to the provisions of Section 285.230 RSMo.

22. Notices. All notices required or permitted hereinunder and required to be in writing may be given by FAX or by first class mail addressed to City and Contractor at the addresses shown above. The date of delivery of any notice given by mail shall be the date falling on the second full day after the day of its mailing. The date of delivery of notice by FAX transmission shall be deemed to be the date transmission occurs, except where the transmission is not completed by 5:00 p.m. on a regular business day at the terminal of the receiving party, in which case the date of delivery shall be deemed to fall on the next regular business day for the receiving party.

23. Records and Audits. The Contractor shall maintain accounts and records, including personnel, property, and financial records, adequate to identify and account for all costs pertaining to the Contract and such other records as may be deemed necessary by the City to assure proper accounting for all project funds. These records will be made available for audit purposes to the City or any authorized representative, and will be retained for three years after the expiration of this Contract.

24. Authorized Employees. Contractor acknowledges that Section285.530, RSMo, prohibits any business entity or employer from knowingly employing, hiring for employment, or continuing to employ an unauthorized alien to perform work within the State of Missouri. Contractor therefore covenants that is not knowingly in violation of subsection 1 or Section 285.530, RSMo, and that it will not knowingly employ, hire for employment, or continue to employ any unauthorized aliens to perform work on the Project, and that its employees are lawfully to work in the United States.

25. Interest of Contractor and Employees. The Contractor covenants that he/she presently has no interest and shall not acquire interest, direct or indirect, in the study area or any parcels therein or any other interest which would conflict in any manner or degree with the performance of his services hereunder. The Contractor further covenants that in the performance of this Contract, no person having any such interest shall be employed.

26. Interest of Members of a City. No member of the governing body of the City and no other officer, employee, or agent of the City who exercises any functions or responsibilities in connection with the planning and carrying out of the program, shall have any personal financial interest, direct or indirect, in this Contract, and the Contractor shall take appropriate steps to assure compliance.

27. Interest of Other Local Public Officials. No member of the governing body of the locality and no other public official of such locality, who exercises any functions or responsibilities in connection with the planning and carrying out of the program, shall have any personal financial interest, direct or indirect, in this Contract, and the Contractor shall take appropriate steps to assure compliance.

28. Affidavit for Contracts Over $5,000.00. That pursuant to Missouri Revised Statute Sections 285.525 through 285.550, if this contract exceeds the amount of $5,000.00 and Contractor is associated with a business entity, Contractor shall provide an acceptable notarized affidavit stating that the associated business entity is enrolled in and participates in a federal work authorization program with respect to the employees working in connection with the contracted services, and that said business entity does not knowingly employ any person who is an unauthorized alien in connection with the contracted services. Additionally, Contractor must provide documentation for said business entity evidencing current enrollment in a federal work authorization program.

29. City Benefits. The Contractor shall not be entitled to any of the benefits established for the employees of the City nor be covered by the Worker's Compensation Program of the City.

30. Occupational License: The Contractor shall obtain and maintain an occupational license with the City of Joplin, Missouri, if required by city code and any required state or federal license. The cost for this occupational license shall be borne by the Contractor. No contract will be executed by the City until this occupational license has been obtained and that the Contractor is current on any City taxes is verified.

31. Safety Training. Pursuant to Missouri Revised Statute Section 292.675, Contractors and subcontractors who sign a contract to work on public works projects must provide a 10-hour OSHA construction safety program, or similar program approved by the Department of Labor and Industrial Relations, to be completed by their on-site employees within sixty (60) days of beginning work on the construction project. Contractors and subcontractors in violation of this provision will forfeit to the public body $2,500 plus $100 a day for each employee who is employed without training. Public bodies and contractors may withhold/assess these penalties from the payment due to those contractors and subcontractors if found to be in non-compliance.

32. Compliance with Laws. Contractor agrees to comply with all applicable federal, state and local laws or rules and regulations applicable to the provision of services and products hereunder. Contractor affirmatively states that payment of all local, state, and federal taxes and assessments owed by Contractor is current.

33. Entire Agreement. This agreement contains the entire agreement of the parties. No modification, amendment, or waiver of any of the provisions of this agreement shall be effective unless in writing specifically referring hereto, and signed by both parties.

34. Remedies. Except as may be otherwise found in the contract documents, all claims, disputes, counter-claims, and other matters in question between the Owner and Contractor arising out of or related to this agreement or the breech thereof, will be decided by arbitration if the parties hereto mutually agree, or in a court of competent jurisdiction within the state in which the Owner is located.

35. Jurisdiction. This agreement and every question arising hereunder shall be construed or determined according to the laws of the State of Missouri. Should any part of this agreement be adjudicated, venue shall be proper only in the Circuit Court of Jasper County, Missouri.

IN WITNESS WHEREOF, the parties hereto have set their hands and seals on the day and year herein stated.

CONTRACTOR:

By: _____

Printed Name: _____

Title: _____

CERTIFICATE OF DIRECTOR OF FINANCE

I certify that the expenditure contemplated by this document is within the purpose of the appropriation to which it is to be charged and that there is an unencumbered balance of appropriated and available funds to pay therefor.

_____

Leslie Haase, Director of Finance

APPROVED AS TO FORM

_____

Peter Edwards, City Attorney

CITY OF JOPLIN, MISSOURI

By: _____

David Hertzberg, Public Works Director

COUNCIL BILL NO. 2020-107 ORDINANCE NO

AN ORDINANCE approving a construction agreement with Vance Brothers Inc. for street microsurfacing in the not to exceed amount Seven Hundred Eighteen Thousand Nine Hundred Ninety and 14/100 Dollars ($718,990.14) for the 2020 Microsurfacing Project and containing an emergency clause.

BE IT ORDAINED BY THE COUNCIL OF THE CITY OF JOPLIN, as follows:

Section 1. That the agreement with Vance Brothers Inc. for street microsurfacing in the not to exceed amount of Seven Hundred Eighteen Thousand Nine Hundred Ninety and 14/100 Dollars ($718,990.14) in the City of Joplin, a copy of which is attached hereto; be the same and is hereby approved.

Section 2. That the City Manager of the City of Joplin, Missouri or his designee, is hereby authorized and directed to execute said agreement, or agreement in substantially similar form, by and on behalf of the City of Joplin.

Section 3. That upon the final approval and acceptance of the contractor's work under said contract, in substantial conformance with the attached exhibits, in writing by the Director of Public Works, and his certification to that effect to the Director of Finance, the contractor shall be paid out of the Transportation Sales Tax, appropriations having been approved in the 2019-2020 city budget.

Section 4. That the City of Joplin declares that this ordinance relating to a public improvement is an emergency within the meaning of Section 2.12(6) of the HOME RULE CHARTER of the City of Joplin, Missouri and the Council hereby declares that this ordinance shall be in full force and effect from and after its passage.

Passed by the Council of the City of Joplin, Missouri, this _____ day of

_____, 2020 by a _____ vote.

_____

ATTEST: Gary L. Shaw, Mayor

_____

Barbara J. Gollhofer, City Clerk

APPROVED AS TO FORM:

_____

Peter C. Edwards, City Attorney

COUNCIL BILL NO. 2020-107

I hereby certify that a sufficient amount is available in Transportation Sales Tax to pay the amounts called for on the basis of the bids received by the City Engineer.

_____

Leslie Haase, Director of Finance

BID TABULATION

PROJECT: Micro Surfacing 2020

DATE OF BID OPENING: January 21, 2020

CONTRACTOR	BID
Vance Brothers – Base Bid	$604,919.15
Engineer Estimate – Base Bid	$725,757.86
Vance Brothers – Alt 1	$32,806.62
Engineering Estimate – Alt 1	$40,541.22
Vance Brothers – Alt 2	$20,361.46
Engineering Estimate – Alt 2	$25,162.22
Vance Brothers – Alt 3	$24,982.37
Engineering Estimate – Alt 3	$30,870.67
Vance Brothers – Alt 4	$23,104.55
Engineering Estimate – Alt 4	$28,551.61
Vance Brothers – Alt 5	$4,481.52
Engineering Estimate – Alt 5	$5,539.44
Vance Brothers – Alt 6	$28,695.93
Engineering Estimate – Alt 6	$35,461.11
Vance Brothers – Total	$739,347.60
Engineering Estimate – Total	$891,884.14

CITY OF JOPLIN
COUNCIL AGENDA ITEM

ITEM
Council Bill 2020-400 Guidehouse LLC Work Authorization #6

MEETING DATE
February 3, 2020

ORIGINATING DEPT
Planning, Development & Neighborhood Services

ATTACHMENTS
Guidehouse Work Authorization #6

REVIEWED BY
Dept. Head: Troy Bolander; Public Works Director: David Hertzberg; Finance Director: Leslie Haase; City Attorney: Peter Edwards; Interim City Manager: Dan Pekarek

SUMMARY
This Council Bill authorizes the execution of Work Authorization #6 of the Master Services Agreement for Professional Administrative Consulting Services with Guidehouse LLC (formerly known as PricewaterhouseCoopers Public Sector LLP) to provide implementation and administrative activities as they relate to upcoming and ongoing CDBG-DR projects.

BACKGROUND
On July 6, 2015 City Council approved a Capital Plan Allocation defining the projects and their budgets to be undertaken with the two disaster grant awards received by the City. In conjunction with the capital plan, Guidehouse has incurred and will incur additional Activity Delivery and Program Administration Costs related to the continued progression of the individual projects and overall program associated with the CDBG-DR funding. Activity Delivery Costs are those costs that are directly carried out for specific projects and can include stakeholder meetings, agreement development, procurement, and compliance oversight of CDBG-DR requirements. Estimated activity delivery costs that will be incurred by City staff and Consultant staff were included in the Capital Plan budgets approved by City Council on July 6, 2015. Program Administration Costs are those administrative costs that attribute to the overall reporting, compliance, monitoring, oversight, coordination, closeout, and financial record keeping of the grants as a whole. This Work Authorization provides $316,732 for Activity Delivery Costs which are part of the direct implementation of projects including the Joplin Bungalows, Disaster Resiliency Planning (Smart Cities), and Public Infrastructure Improvements. Additionally, $115,817 in Planning Costs and $183,175 in General Administration Costs are included in Work Authorization #6 associated with the aforementioned Program Administration tasks. Overall, Work Authorization #6 provides for a total of $615,724 effective through August 31, 2020.

FUNDING SOURCE
These payments are covered by the CDBG-DR Grant Funds.

RECOMMENDATION

Approve the execution of Work Authorization #6 of the Master Services Agreement for Professional Administrative and Consulting Services with Guidehouse LLP (formerly known as PricewaterhouseCoopers Public Sector LLP) in an amount not to exceed $615,724 on an emergency basis as provided for in Section 2.12(6) of the Home Rule Charter.

CITY		CONSULTANT	
CITY OF JOPLIN **602 S. MAIN STREET** **JOPLIN, MO 64801**		Name: GUIDEHOUSE LLP Address: 1800 TYSONS BLVD, 7TH FLOOR MCLEAN, VA 22101	
Attention: Troy Bolander Director, Planning Development & Neighborhood Services		Attention: Guarav Menon, Partner	
Department: Planning Development & Neighborhood Services		Phone: 267-879-9730	Fax: 703-918-3100
Phone: 417-624-0820, Ext 510	Fax: 417-625-4738		

WORK AUTHORIZATION NUMBER GH-DR1-2-ADM-6
TO MASTER SERVICES AGREEMENT FOR PROFESSIONAL ADMINISTRATIVE CONSULTING SERVICES

This Work Authorization dated February 3, 2020 incorporates the terms and conditions of the MASTER PROFESSIONAL SERVICES AGREEMENT between Guidehouse LLP formerly known as PricewaterhouseCoopers Public Sector LLP ("GH") and CITY OF JOPLIN (referred to as "City" or the "Client"), dated April 17, 2017 (the "Agreement"), and applies to the performance of consulting services described in Exhibit A (the "Services"). Capitalized terms used but not defined herein shall have the meanings ascribed to such terms in the Agreement.

1. **Services**. The City agrees to engage the services of the Consultant and the Consultant agrees to perform the services hereinafter set forth in connection with projects described in ***Exhibit A***.

2. **Addition to Services.** The parties may agree to add to the Consultant services or delete therefrom activities of a similar nature to those set forth in Exhibit A. All such directives and changes shall be in written form (a "Change Order") and prepared and approved by the City and, once accepted by the Consultant, countersigned by the Consultant. The Consultant shall not be obligated to undertake such changed activities unless and until the mutual execution of an amendment.

3. **Term**. The services of the Consultant shall commence as soon as practicable after the execution of this contract, unless otherwise directed in writing, and shall be undertaken and completed by the date set forth in Section 3 of ***Exhibit A***.

4. **Costs not to Exceed**. The City is limited by law with respect to the amount of money it can pay. Therefore, the City has established a fixed sum for this contract, which cannot be exceeded unless this contract is amended. The Consultant providing services hereunder shall be required to keep track of the amount of hours billable under this contract at all times; and any work in excess of the fixed sum shall not be eligible for payment. The Consultant shall notify the City if Consultant anticipates that the contract amount may be exceeded, in order to determine whether or not the City is prepared to increase the total compensation. The Consultant shall establish a billing system showing the amount of money remaining on the contract, which shall be shown in each monthly billing.

5. **Payment**. Client will compensate GH under the terms in Exhibit A for the Services performed under this Work Authorization. It is expressly understood that in no event will the total compensation and reimbursement to be paid to the Consultant under the terms of this Work Authorization Number 6 exceed the sum of $615,724.

6. **Insurance.** Without limiting any of the other obligations or liabilities of the Consultant, the Consultant shall secure and maintain at its own cost and expense, throughout the duration of this Contract and until the work is completed and accepted by the City, insurance of such types and in such amounts as may be necessary to protect it and the interests of the City against hazards or risks of loss as hereunder specified or which may arise out of the performance of the Contract Documents. It shall be the responsibility of the Consultant to maintain the required insurance coverage at all times during the term of the Contract. Failure of the Consultant to maintain coverage shall not relieve it of any contractual responsibility or obligation or liability under the Contract Documents.

The certificates of insurance shall be filed with the City within 24 hours of the time that this contract is signed by the Consultant. The required endorsements shall be provided within forty five days after the applicable policies renew. Consultant shall provide thirty

(30) days written notice prior to cancellation or non-renewal of such insurance. Such notices shall be mailed, certified mail, return receipt requested, to:

City of Joplin – Planning, Development and Neighborhood Services, 602 S. Main, Joplin, MO 64801; and

All policies except for the professional liability policy shall include the City as an additional insured with limits of liability not less than the sovereign immunity limits for Missouri public entities calculated by the Missouri Department of Insurance as of January 1 each calendar year and published annually in the Missouri Register pursuant to Section 537.610, RSMo.
(See, http://insurance.mo.gov/industry/sovimmunity.php).

As of January 1, 2020, the minimum coverage for the insurance referred to herein shall be as set out below:

a. Workers' Compensation….Statutory coverage per RSMo 287.010 et seq.
Employer's Liability……. $1,000,000.00

b. Commercial General Liability Insurance, including coverage for Contractual Liability. Such coverage shall apply to bodily injury and property damage on an "Occurrence Form Basis" with limits of at least Two Million Nine Hundred Five Thousand Six Hundred Sixty Four and no/100 Dollars ($2,905,664.00) for all claims arising out of a single accident or occurrence and at least Four Hundred Thirty Five Thousand Eight Hundred Forty Nine and no/100 Dollars ($435,849.00) with respect to injuries and/or death of any one person in a single occurrence and an amount not less than at least $1,000,000 for all claims to property arising out of a single occurrence and at least $100,000 to any one owner with respect to damages to property. Consultant agrees to cause its insurer to include City as an additional insured on such insurance policy, and said policy shall be primary and noncontributory.

c. Automobile Liability Insurance covering bodily injury and property damage for owned, non-owned and hired vehicles, with limits of at least Two Million Nine Hundred Five Thousand Six Hundred Sixty Four and no/100 Dollars ($2,905,664.00) for all claims arising out of a single accident or occurrence and at least Four Hundred Thirty Five Thousand Eight Hundred Forty Nine and no/100 Dollars ($435,849.00) with respect to injuries and/or death of any one person in a single accident or occurrence.

d. Subcontracts. In case any or all of this work is sublet, the Consultant shall require the subcontractor to procure and maintain all insurance required in subparagraphs (A), (B) and (C) hereof and in like amounts. Consultant shall require any and all subcontractors with whom it enters into a contract to perform work on this project to protect the City through insurance against applicable hazards or risks and shall, upon request of the City, provide evidence of such insurance.

e. Notice. The Consultant and/or subcontractor shall furnish the City prior to beginning the work satisfactory proof of carriage of all the insurance required by this contract in the form of current edition ACORD© certificate of insurance forms.

f. Legislative or Judicial Changes. In the event the scope or extent of the City's tort liability as a governmental entity as described in Section 537.600 through 537.650 RSMo is broadened or increased during the term of this agreement by legislative or judicial action, the City may require Consultant, upon 10 days written notice, to execute a contract addendum whereby the Consultant agrees to provide, at a price not exceeding Consultant's actual increased premium cost, additional liability insurance coverage as the City may require to protect the City from increased tort liability exposure as the result of such legislative or judicial action. Any such additional insurance coverage shall be evidenced by an appropriate certificate of insurance and shall take effect within the time set forth in the addendum.

7. All other terms and conditions of the original Agreement shall remain in effect.

IN WITNESS WHEREOF, the parties hereto have set their hands and seals on the day and year herein stated.

REVIEWED FOR APPROVAL

GUIDEHOUSE LLP

By: _____

Printed Name: _____ _____

Title: _____ _____

Date: _____

CERTIFICATE OF DIRECTOR OF FINANCE

I certify that the expenditure contemplated by this document is within the purpose of the appropriation to which it is to be charged and that there is an unencumbered balance of appropriated and available funds to pay therefore.

_____
Leslie Haase, Director of Finance

APPROVED AS TO FORM

_____
Peter Edwards, City Attorney

CITY OF JOPLIN

By: _____
Troy Bolander
Director, Planning Development & Neighborhood Services

By: _____
Dan Pekarek
Interim City Manager

Date: _____

EXHIBIT A - WORK AUTHORIZATION NUMBER GH-DR1-2-ADM-6

1. General:
The Scope of Services identified in this Work Authorization are associated with the First through Ninth Partial Action Plans.

2. Definitions:
Program Administration Costs (PACs) are those allowable costs incurred for implementing and carrying out eligible CDBG-DR administrative activities.

Planning Costs (PC) are those allowable costs incurred for implementing and carrying out eligible CDBG-DR planning activities.

Activity Delivery Costs (ADCs) are those allowable costs incurred for implementing and carrying out eligible CDBG-DR activities. All ADCs are allocable to a CDBG-DR activity, including direct and indirect costs integral to the delivery of the final CDBG-DR-assisted activity. CDBG-DR expenditures for activity delivery costs are not governed by 24 CFR 570.205 and 570.206.

3. Term:

All work tasks under this Work Authorization shall be completed no later than August 31, 2020 unless specifically agreed to in writing by the City of Joplin.

4. Scope of Services and Budget for Proposed Work Authorization Number 6:

Round I	ADC	Admin	Planning
Round I Totals:	$ 205,499.96	$ 6,250.78	$ 48,322.60
Round II	**ADC**	**Admin**	**Planning**
Round II Totals:	$ 111,232.42	$ 176,923.92	$ 67,493.92
Work Authorization 6 Totals:	$ 316,732	$ 183,175	$ 115,817
		Grand Total	$ 615,724

We reviewed our classification assumptions against both CPD 13-07 and HUD guidance under "Basically CDBG" (Ch. 11 Financial Management) which are in agreement with respect to the classification of costs. The majority of the tasks proposed under this Work Authorization are anticipated to be ADC specific.

5. Payment/Fee Schedule:

Role	**Hourly Rate**
Principal	$236.90
Director	$216.30
Manager	$195.70
Senior Associate	$169.95
Associate	$149.35
Analyst	$111.30
Recovery Specialist	$103.00
Support Specialist 3	$77.25
Support Specialist 4	$61.80
Support Specialist 2	$41.30
Support Specialist 1	$30.90

The City will compensate Consultant for the services performed and expenses incurred through the term or effective date of any termination of this Work Authorization.

A. Consultant will bill on a time and expense basis, with our fees determined by the tasks required and the related time spent. Consultant shall invoice the City one time per month unless more frequent invoicing is requested by the City and all invoices will include necessary supporting documentation as defined below. Consultant will be paid within thirty (30) days of the submission of its invoice.

B. If the City does not pay invoiced amounts within sixty (60) days of receipt, GH may suspend or terminate the Services upon five (5) days written notice if payment is not received within such period. The City shall be responsible for taxes, if any, imposed on the Services or on this engagement, other than taxes imposed by employment withholding for GH's personnel or on GH's income or property.

   Each Invoice must detail, at minimum, all of the following:
   - The amount requested by Grant Budget line-item (including any travel expenditure reimbursement requested and for which documentation and receipts, as required are attached to the invoice).
   - The amount reimbursed by Grant Budget line-item to date.
   - The total amount reimbursed under the Grant Contract to date.
   - The total amount requested (all line-items) for the Invoice Period.

C. Budget Line-items:
   - Expenditures, reimbursements, and payments under this Grant Contract shall adhere to the Grant Budget.
   - Consultant may vary from a Grant Budget line-item amount of the line-item amount, provided that any increase is off-set by an equal reduction of other line-item amount(s) such that the net result of variances shall not increase the total Grant Contract amount detailed by the Grant Budget.
   - Any increase in the Grant Budget, grand total amounts shall require an amendment of the Partial Action Plan in accordance with all applicable CDBG-DR policies and requirements.

AGREED AND ACCEPTED:

DATE: _____

Guidehouse LLP

BY: _____

NAME:
TITLE:

City of Joplin

BY: _____

NAME:
TITLE:

COUNCIL BILL NO. 2020-400 ORDINANCE NO.

AN ORDINANCE authorizing the City of Joplin to execute Work Authorization #6 to the Master Services Agreement for Professional Administrative Consulting Services with Guidehouse LLC (GH) formerly known as PricewaterhouseCoopers Public Sector LLP (PwC) to provide implementation and administrative activities, not to exceed Six Hundred Fifteen Thousand, Seven Hundred and Twenty-Four Dollars ($615,724) and authorizing the Interim City Manager or his designee to execute said Agreement; and containing an emergency clause.

WHEREAS, on May 22nd, 2011, an EF-5 tornado caused catastrophic damage to a significant portion of the City of Joplin; and

WHEREAS, the City of Joplin was awarded $45,266,709 in Community Development Block Grant Recovery Assistance under Public Law 112-55 and $113,276,000 in Community Development Block Grant Disaster Recovery Assistance under Public Law 113-2 from the U.S. Department of Housing and Urban Development to aid in the City's recovery; and

WHEREAS, the City of Joplin entered into a Master Agreement for Professional Administrative Support Services with Guidehouse LLC formerly known as PricewaterhouseCoopers Public Sector LLP (PwC) on April 20, 2017

NOW, THEREFORE, BE IT ORDAINED BY THE CITY OF JOPLIN, MISSOURI, AS FOLLOWS:

Section 1. That the City execute Work Authorization Number 6 to the Master Services Agreement for Professional Administrative Consulting Services between the City of Joplin and Guidehouse LLP (GH) to provide activity delivery, planning, and administrative activities, not to exceed Six Hundred Fifteen Thousand, Seven Hundred and Twenty-Four Dollars ($615,724) a true and accurate copy of which is attached hereto and incorporated by reference to Exhibit "A".

Section 2. That the Interim City Manager or his designee, the Director of Planning, Development and Neighborhood Services of the City of Joplin, Missouri, is hereby authorized to execute said Agreement in substantially similar form, and on behalf of the City of Joplin.

Section 3. This ordinance is an emergency within the means of Section 2.12 (6) in that said ordinance provides for public improvements and is considered an emergency by the Council and as such shall become effective immediately upon this passage as provided by the Home Rule Charter for the City of Joplin. Specifically, this ordinance approves consulting work on public infrastructure and public facilities projects to begin immediately

PASSED BY THE COUNCIL OF THE CITY OF JOPLIN, MISSOURI, this _____ day of

_____, 2020, by a vote of _____.

_____
Gary L. Shaw, Mayor

ATTEST:

_____
Barbara L. Gollhofer, City Clerk

APPROVED AS TO FORM:

_____
Peter C. Edwards, City Attorney

CITY OF JOPLIN
COUNCIL AGENDA ITEM

ITEM
Council Bill 2020-500 – Approving a budget amendment for FY 2019

MEETING DATE
February 3, 2020

ORIGINATING DEPT
Finance

ATTACHMENTS
CB 2020-500 Ordinance; Schedule "A" Budget Amendment

REVIEWED BY
Department Head: Leslie Haase; City Attorney: Peter Edwards; Interim City Manager: Dan Pekarek

SUMMARY
This Council Bill amends the adopted 2018-2019 Budget of the City of Joplin.

BACKGROUND
In compliance with Charter regulations and accounting principles, the proposed adjustment is required to ensure that department expenditures do not exceed approved budget appropriations.

Here is an explanation for the items in Schedule A:

- Amending various departments for utilities, such as telephone charges, copy services, electric charges, gas charges, water charges, wastewater charges, and postage charges.
- Amending various departments for projects and operational supplies.
- Amending various departments for fuel costs and central garage repairs.
- Amending various departments for depreciation expense.

The purpose of the budget amendment is to recognize changes that have occurred since the annual budget was adopted. This budget amendment increases expenditures by $4,945,100.00.

This is a budget amendment based on expected expenditures for the year. However, expenditures for the fiscal year will continue through December, while revenue accruals will also continue to be booked through this same time period. This is not a projection of ending fund balance in the various funds, but merely budgeted expenditures compared to actual expenditures to ensure compliance with the charter. The actual increase or decrease to various fund balances will not be known until the accrual entries are completed for the annual audit.

FUNDING SOURCE
This item is not applicable for budget amendments.

RECOMMENDATION
Staff recommends approval of this council bill on an emergency basis.

COUNCIL BILL NO. 2020-500 **ORDINANCE NO.**

AN ORDINANCE amending the Annual Budget of the City of Joplin for the Fiscal Year 2018-2019 as adopted by Ordinance 2018-145 on October 15, 2018, to adjust appropriations and containing an emergency clause.

WHEREAS, the City of Joplin, Missouri passed Ordinance 2018-145 on October 15, 2018, which estimated revenues and appropriated funds for the fiscal year 2018-2019, and

WHEREAS, the Council of the City of Joplin has previously approved the programs and projects which require additional appropriations for completion.

BE IT ORDAINED BY THE COUNCIL OF THE CITY OF JOPLIN, MISSOURI, as follows:

Section 1. That fiscal year 2018-2019 budgeted appropriations as adopted by Ordinance 2018-145 be amended by increasing appropriations by the total amount of Four Million Nine Hundred Forty-Five Thousand One Hundred Dollars and No Cents ($4,945,100.00) for the purposes and amounts as shown in Schedule "A" attached hereto.

Section 2. That the Director of Finance is hereby directed to make all necessary entries on the City records to show the increase in appropriations.

Section 3. This Ordinance is declared by the City Council to be an emergency within this meaning of Section 2.12 (4), of the Home Rule Charter of the City of Joplin, Missouri, in order to continue the day-to-day operations of the City and as such shall become effective immediately upon its passage.

PASSED BY THE COUNCIL OF THE CITY OF JOPLIN, MISSOURI, this _____ day

of _____, 2020, by a _____vote.

_____
Gary L. Shaw, Mayor

ATTEST:

_____
Barbara J. Gollhofer, City Clerk

APPROVED AS TO FORM:

_____
Peter C. Edwards, City Attorney

SCHEDULE A

CITY OF JOPLIN
BUDGET AMENDMENT
2018-2019 ADOPTED BUDGET
3-Feb-20

FUND	ACTIVITY	ACCOUNT	DESCRIPTION		REVENUES	EXPENDITURES
001	General Fund					
	City Council	001-0101-500-3205	Postage	$		1,050
	City Council	001-0101-500-5010	Consulting Fees			10,000
	City Council	001-0101-500-7005	Printing Services			3,000
	City Manager	001-0501-500-1010	Regular Wages			8,000
	Human Resources Staff Dev	001-1204-500-1725	Employee Physicals			7,000
	Building Regulations	001-1506-570-7005	Printing Services			500
	Building Regulations	001-1506-570-7131	Merchant Card Service Fee			250
	TIF Reimbursable Costs	001-2015-500-5015	Legal Fees			13,000
	Police Patrol	001-5501-510-1010	Regular Wages			50,000
	Police Patrol	001-5502-510-3115	Fuel, Oil & Diesel			2,500
	Police Patrol	001-5502-510-4210	Central Garage Repairs			21,000
	Police Patrol	001-5502-510-6025	K-9 Travel Expenses			750
	Police Investigations	001-5503-510-1010	Regular Wages			25,000
	Police Investigations	001-5503-510-4210	Central Garage Repairs			12,000
	Police Investigations	001-5503-510-8210	Motor Vehicles			2,500
	Police Jail Services	001-5507-510-2205	Food & Beverage Supplies			1,000
	Police Special Services	001-5508-510-3015	Telephone Charges			8,000
	Police Special Services	001-5508-510-4210	Central Garage Repairs			10,000
	Police Federal Grants	001-5590-510-2050	Operational Supplies			31,000
	Police Local Grants	001-5593-510-1010	Regular Wages			9,000
	Emergency Management	001-7002-510-5265	Maintenance Contracts			12,000
	Transfers Out	001-9003-500-9065	Flexible Spending Plan			15,000
	Total General Fund			$	-	242,550
101	Public Safety Sales Tax					
	Police	101-5575-510-1010	Regular Wages	$		150,000
	Fire	101-6075-510-1010	Regular Wages			81,000
	Total Public Safety Sales Tax			$	-	231,000
110	Health Fund					
	Health Medical Services	110-3504-550-5085	DHSS Vaccine Program	$		50,000
	Health Animal Control	110-3505-550-7005	Printing Services			1,500
	Health Animal Control	110-3505-550-8210	Motor Vehicles			1,500
	Total Health Fund			$	-	53,000
115	Parks Fund					
	Parks Administration	115-6501-560-6005	Travel Expenses	$		650
	Parks Senior Adult Services	115-6512-560-3005	Electric Charges			3,100
	Total Parks Fund			$	-	3,750
120	SWM Fund					
	Trash Services	120-4515-540-5030	Trash Administration	$		15,000
	Grants - State	120-4591-540-2815	Special Events			8,600
	Total SWM Fund			$	-	23,600

130	Parks & Stormwater Sales Tax Fund					
	Parks Projects	130-6550-560-8505	Park Improvements	$		655,000
	Total Parks & Stormwater Sales Tax Fund			$	-	655,000
150	Community Planning Fund					
	HOME Consortium	150-1520-570-7402	CHDO			10,000
	Total Community Planning Fund			$	-	10,000
205	Debt Service Fund					
	City Hall	205-8703-500-7310	Bond Agent Costs	$		100
	Total Debt Service Fund			$	-	100
305	Infrastructure Fund					
	Infrastructure Projects	305-4550-530-8635	Sidewalk Projects	$		500,000
	Infrastructure Projects	305-4550-530-8665	Stormwater Projects			1,500,000
	Total Infrastructure Fund			$	-	2,000,000
310	Public Improvements Fund					
	Special Assessments	310-4560-520-4115	Other Property Repairs	$		15,000
	Total Public Improvements Fund			$	-	15,000
405	Airport Fund					
	Airport	405-5004-520-7125	Depreciation Expense	$		220,000
	Total Airport Fund			$	-	220,000
410	Golf Course Fund					
	Golf Administration	410-6520-560-1210	Seasonal Wages	$		14,000
	Golf Administration	410-6520-560-7125	Depreciation Expense			33,000
	Grounds Maintenance	410-6521-560-1210	Seasonal Wages			26,000
	Grounds Maintenance	410-6521-560-2605	Chemical & Lab Supplies			10,000
	Grounds Maintenance	410-6521-560-5115	Temporary Employees			14,000
	Grounds Maintenance	410-6521-560-8220	Operating Equipment			11,000
	Total Golf Course Fund			$	-	108,000
415	Sanitary Sewer Fund					
	Sewer Billing & Collection	415-2002-540-1010	Regular Wages	$		20,000
	Sewer Billing & Collection	415-2002-540-3205	Postage			15,000
	Sewer Billing & Collection	415-2002-540-5180	Shut Off/Reconnect Fees			25,000
	Sewer Billing & Collection	415-2002-540-7010	Copy Services			3,000
	Sewer Billing & Collection	415-2002-540-7120	Bad Debt Expense			27,000
	Sewer Billing & Collection	415-2002-540-7131	Merchant Card Service Fee			42,000
	Debt Service	415-2009-500-7315	DNR Fee			100
	Sewer Treatment	415-4541-540-1805	OPEB Expense			14,000
	Sewer Treatment	415-4541-540-2030	Maintenance Supplies			80,000
	Sewer Treatment	415-4541-540-2605	Chemical & Lab Supplies			5,000
	Sewer Treatment	415-4541-540-3005	Electric Charges			66,000
	Sewer Treatment	415-4541-540-3115	Fuel, Oil & Diesel			3,000
	Sewer Treatment	415-4541-540-4105	Property Repairs & Maintenance			40,000
	Sewer Maintenance	415-4542-540-7125	Depreciation Expense			435,000
	Total Sanitary Sewer Fund			$	-	775,100
512	Workers Compensation Fund					
	Workers Compensation	512-7503-500-5305	Judgments & Claims	$		400,000

	Workers Compensation	512-7503-500-9990	Transfer to Golf Course			200,000
	Total Workers Compensation Fund			$	-	600,000
520	Emergency Communications Fund					
	Radio Services	520-8503-510-2745	Portable Communication	$		4,000
	Radio Services	520-8502-510-2835	Equipment Lease			4,000
	Total Emergency Communications Fund			$	-	8,000
	Grand Total			$	-	4,945,100