COUNCIL AGENDA
Monday, February 6, 2017
6:00 P.M., Council Chambers

1. **Call To Order**
   Invocation
   Pledge of Allegiance of the United States of America

2. **Roll Call**

3. **Presentations**

4. **Finalization Of Consent Agenda**

5. **Reports And Communications**

6. **Citizen Requests And Petitions**

7. **Public Hearings**

8. **Consent Agenda**

   1. Minutes Of The January 17, 2017 Joplin City Council Meeting

      Documents:

      CC MINS 1-17.PDF

9. **Resolutions**

   1. RESOLUTION NO. 2017-003
      A RESOLUTION Authorizing the Director of Public Works to submit a resolution of support and application to the Missouri Department of Natural Resources Recreational Trails Program for grant funding for the construction of new trail connectors to the new Jackson Avenue Bridge at Shoal Creek.

      Documents:

      CB 2017-003 MDNR SUMMARY.PDF
      MAP.PDF
      RS 2017 - 003.PDF

10. **Ordinances - Emergency**

    1. COUNCIL BILL NO. 2017-105
       AN ORDINANCE approving an agreement with Allgeier, Martin & Associates not to exceed Eighty Five Thousand Two Hundred Eighty and no/100 Dollars ($85,280.00) for Design Services Associated with the 2017 Public Infrastructure Improvements in the NID # IV Phase II Project and containing an emergency clause.

       Documents:

       SUMMARY SHEET CB 2017-105.PDF
       AGREEMENT - NID 4.PDF
       NID 4 MAP.PDF
       CB 2017-105.PDF

    2. COUNCIL BILL NO. 2017-106

AN ORDINANCE approving a contract with Blevins Asphalt Construction Company Inc. in the amount of One Million Seven Hundred Eighty Eight Thousand Three Hundred Eleven and 15/100 Dollars ($1,788,311.15) for Joplin Street Resurfacing 2017 project in the City of Joplin, Missouri; providing how the cost shall be made and levied; and, amending the Annual Budget of the City of Joplin for the Fiscal year 2016-2017 as adopted by Ordinance 2016-177 on October 17, 2016, and containing an emergency clause

Documents:

SUMMARY SHEET - RESURFACING 2017-106.PDF
BID TAB FORM.PDF
2017 OVERLAY PROGRAM.PDF
CB - RESURFACING 2017-106.PDF

3. COUNCIL BILL NO. 2017-107
AN ORDINANCE approving the City of Joplin to enter into a contract with Branco Enterprises Inc. in the amount of $7,471,595.40 (Seven Million Four Hundred Seventy One Thousand Five Hundred Ninety Five and 40/100 Dollars) for the Main Street Improvements from 15th to 32nd Street Project and authorizing the Director of Public Works to execute said Agreement; and containing an emergency clause.

Documents:

SUMMARY MAIN ST. 15TH TO 32ND.PDF
BID TAB FORM.PDF
CB MAIN ST. 15TH TO 32ND.PDF
MAIN 15TH TO 32ND.PDF

4. COUNCIL BILL 2017-108
AN ORDINANCE approving a Work Authorization for Allgeier Martin & Associates Inc. in the not to exceed amount of Five hundred Twenty-six Thousand Five hundred Forty-two and No/100 Dollars ($526,542.00) for Professional Engineering Consulting Services for the I & I Reduction Program and containing an emergency clause.

Documents:

CB 2017-108 SUMMARY SHEET I AND I.PDF
CB 2017-108.PDF
ATTACHMENTONETOEXHIBITA AMA-II RP-001 FLOWMONITORINGONLYFINAL.PDF
ENGINEERING CONSULTANT AGREEMENT II REDPROGRAM 01-19-2017.PDF
EXHIBITA AMA-II RP-001 FLOWMONITORINGONLYFINAL 01-26-2017.PDF
JOPLIN ENGINEERING WORK AUTHORIZATION II REDPROGRAM FLOW MONITORING ONL....PDF

5. COUNCIL BILL NO. 2017-356
AN ORDINANCE approving a Purchase Order to be issued to World Wide Technology for computers, printers and equipment; and, authorizing the City Manager or his designee to execute said Purchase Order by and on behalf of the City of Joplin; and containing an emergency clause.

Documents:

CB 2017-356 FINAL QUOTES.PDF
CB 2017-356 PROCUREMENT LETTER COMPUTERS.PDF
CB 2017-356 SUMMARY.PDF
CB 2017-356.PDF

6. COUNCIL BILL NO. 2017-357
AN ORDINANCE approving a Purchase Order to be issued to Modern Business Interiors (MBI) to purchase shelving, tables, and workstations; and, authorizing the City Manager or his designee to execute said Purchase Order by and on behalf of the City of Joplin; and containing an emergency clause.

Documents:

CB 2017-357 BIDS.PDF
CB 2017-357 SUMMARY.PDF
JPL SHELVING PACKAGE.PDF
CB 2017-357.PDF

7. COUNCIL BILL NO. 2017-358
AN ORDINANCE approving a Purchase Order to be issued to William Webb to purchase tables and chairs; and, authorizing the City Manager or his designee to execute said Purchase Order by and on behalf of the City of Joplin; and containing an emergency clause.

Documents:

CB 2017-358 - SUMMARY.PDF
CB 2017-358-BID TAB.PDF
JPL FURNITURE PACKAGE.PDF
CB 2017-358.PDF

8. COUNCIL BILL NO. 2017-359

AN ORDINANCE approving a Purchase Order to be issued to Modern Business Interiors (MBI) to purchase chairs, tables and workstations; and, authorizing the City Manager or his designee to execute said Purchase Order by and on behalf of the City of Joplin; and containing an emergency clause.

Documents:

CB 2017-359-BID TAB.PDF
CB 2017-359-SUMMARY.PDF
JPL FURNITURE PACKAGE.PDF
CB 2017-359.PDF

9. COUNCIL BILL NO. 2017-360
AN ORDINANCE approving a Purchase Order to be issued to Grooms Office Environments to purchase tables, chairs, and other furniture; and, authorizing the City Manager or his designee to execute said Purchase Order by and on behalf of the City of Joplin; and containing an emergency clause.

Documents:

CB 2017-360 - BID TAB.PDF
CB 2017-360 - SUMMARY.PDF
JPL FURNITURE PACKAGE.PDF

CB 2017-360.PDF

10. COUNCIL BILL NO. 2017-361
AN ORDINANCE approving a Purchase Order to be issued to Color Art to purchase various style chairs and seating furniture; and, authorizing the City Manager or his designee to execute said Purchase Order by and on behalf of the City of Joplin; and containing an emergency clause.

Documents:

CB 2017-361 - BID TAB.PDF
CB 2017-361 - SUMMARY.PDF
JPL FURNITURE PACKAGE.PDF
CB 2017-361.PDF

11. COUNCIL BILL NO. 2017-362
AN ORDINANCE approving the contract by and between the City of Joplin and Nelson Demolition for the demolition of the structure(s) and clearing of lot area and located at 1116 E. Hill in the City of Joplin, Missouri, for the amount of One Thousand Eight Hundred Ninety-Nine and 00/100 Dollars (1,849.00); providing how the cost thereof shall be paid; how the assessment thereof shall be made; and containing an emergency clause.

Documents:

CB 2017-362 - BID.PDF
CB 2017-362 - PICTURES.PDF
CB 2017-362 - SUMMARY.PDF
CB 2017-362.PDF

12. COUNCIL BILL NO. 2017-363
AN ORDINANCE approving the contract by and between the City of Joplin and Nelson Demolition for the demolition of the structure(s) and clearing of lot area and located at 519 N. Jackson Ave. in the City of Joplin, Missouri, for the amount of Three Thousand Four Hundred and Forty-Nine 00/100 Dollars (3,449.00); providing how the cost thereof shall be paid; how the assessment thereof shall be made; and containing an emergency clause.

Documents:

CB 2017-363 - SUMMARY.PDF
CB 2017-363 .PDF
CB 2017-363 -BID TAB.PDF
CB 2017-363-PIC.PDF

13. COUNCIL BILL NO. 2017-364
AN ORDINANCE approving the contract by and between the City of Joplin and B & D Yardbuilders for the demolition of the structure(s) and clearing of lot area and located at 119 N. Byers Ave. in the City of Joplin, Missouri, for the amount of Ten Thousand Five Hundred and 00/100 Dollars (10,500.00); providing how the cost thereof shall be paid; how the assessment thereof shall be made; and containing an emergency clause.

Documents:

CB 2017-364.PDF
CB 2017-364 - PICS.PDF
CB 2017-364 - SUMMARY.PDF

CB 2017-364 -BID TAB.PDF

14. COUNCIL BILL NO. 2017-600
AN ORDINANCE Authorization to accept an Agreement by and between the City of Joplin and Missouri Highways and Transportation Commission, for Air Traffic Control Tower Operating Assistance Grant Agreement for Air Traffic Control Services by the City of Joplin and containing an emergency clause.

Documents:

CB 2017-600 SUMMARY.PDF
ATCT AGREEMENT CITY OF JOPLIN AIR 176-090A-2.PDF
CB 2017-600.PDF

15. COUNCIL BILL NO. 2017-601
AN ORDINANCE approving a Contract for grant money by and between the City of Joplin, Missouri and the Missouri Department of Transportation dealing generally with work zone traffic enforcement in the amount of one thousand dollars ($1,000.00); authorizing the City Manager to execute the same by and on behalf of the City of Joplin, Missouri; and containing an emergency clause.

Documents:

2016-2020 JOPLIN PRG AGREEMENT.PDF
AGENDA ITEM_ CB 2017-601.PDF
COUNCIL BILL 2017-601.PDF
JOPLINPDWORKZONEPROGRAMORDER.PDF

11. **Ordinances - First Reading**

12. **Ordinances - Second Reading And Third Reading**

13. **Unfinished Business**

14. **New Business**

    1. News From The PIO

Anyone wishing to address the Council should step to the podium and state his/her name and address. If the matter is not a Public Hearing, a request to speak to the Council should be prepared prior to the meeting. Speaking time will be limited to five (5) minutes.

Sound enhancement units are available for hearing impaired customers who provide a form of identification as security, which will be returned to the customer upon the return of the unit.

Those in need of disability-related auxiliary aids or services should contact the City Clerk's office at (417) 624-0820, ext. 220 no later than 48 hours prior to the meeting.

Notice posted at ____ p.m. on this the __ day of ____, ____. (RSMo 610.020)

CITY OF JOPLIN
CITY COUNCIL MEETING
MINUTES January 17, 2017

CALL TO ORDER
The regular meeting for the Joplin City Council was called to order at 6:00 p.m.by Mayor Michael Seibert.

INVOCATION - read by City Clerk Barbara Hogelin

PLEDGE OF ALLEGIANCE to the United States of America –led by Council Member Colbert-Kean.

ROLL CALL – Answering Roll Call were: Taylor Brown, Melodee Colbert-Kean; Dan McCreary, Gary Shaw; Ryan Stanley Michael Seibert, Ryan Stanley, Phil Stinnett and Jim West. Also in attendance were City Manager Sam Anselm and City Attorney Peter Edwards. Motion by Mr. Stanley, second by Mr. West to excuse Mrs. Lewis. Motion carried 8-0.

PRESENTATIONS
A Proclamation to recognize January 3, 2017 as Retirement Day for Steve McIntosh, after 20 years of service as a regional representative for United States Senator Roy Blunt was presented by Mayor Seibert to Steve McIntosh and accolades were given in the form of a "roast" by Chamber President Rob O'Brian, Joelle Conner, and Jake Heisten.

FINALIZATION OF CONSENT AGENDA - There being no further business to come before the Council, the Consent Agenda was finalized.

REPORTS AND COMMUNICATIONS

CITIZEN REQUESTS AND PETITIONS
City Clerk, Barbara Hogelin told Council since the printed Agenda was released a Request from Emily Larson, 2919 Delaware Ave. had been received in her office to address Council regarding the development of Natural Grocers in Joplin. Motion by Mr. West, second by Mr. McCreary to allow Ms. Larson to address Council.

PUBLIC HEARINGS

CONSENT AGENDA – Motion by Mr. Stanley, second by Ms. Colbert-Kean to approve the Consent Agenda. Voting in favor were Council Members: Brown, Colbert-Kean, Lewis, McCreary, Shaw, Seibert, Stanley, Stinnett and West, 9. Nays: 0.

Minutes of the January 3, 2017 Council Meeting

COUNCIL BILL NO. 2017-501 - AN ORDINANCE approving a Cooperative Agreement between EVC-Woodsonia Joplin, LLC, the 510 Rangeline Community Improvement District, and the City of Joplin, Missouri, to further define the project costs and rights relating to the District's Services and Projects; and, authorizing the City Manager to execute the Agreement. **Ordinance No. 2017-004**

RESOLUTIONS

Mr. Shaw introduced RESOLUTION NO. 2017-001 - A RESOLUTION authorizing the filing of a Eighth Amendment to the Initial Action Plan with the U.S Department of Housing and Urban Development as required for use of the City of Joplin's Community Development Block Grant Disaster Recovery (CDBG-DR) Program (Round 1); and authorizing the City Manager to execute said Amendment for and on behalf of the City of Joplin. Motion by Mr. Shaw, second by Mr. Stanley that Resolution No. 2017-001 be approved. Voting in favor were Council Members: Brown, Colbert-Kean, Shaw, Seibert, Stanley, Stinnett and West, 7. Nays: 1, McCreary. Absent: 1, Lewis.

Mr. Stanley introduced RESOLUTION NO. 2017- 002 - A RESOLUTION authorizing the filing of a Eighth Partial Action Plan with the U.S Department of Housing and Urban Development as required for use of the City of Joplin's Community Development Block Grant Disaster Recovery (CDBG-DR) Program (Round 2); and authorizing the City Manager to execute said Partial Action Plan for and on behalf of the City of Joplin. Motion by Mr. Stanley, second by Mr. Shaw that Resolution No. 2017-001 be approved. Voting in favor were Council Members: Brown, Colbert-Kean, McCreary, Shaw, Seibert, Stanley, Stinnett and West, 8. Nays: 0. Absent: 1, Lewis.

ORDINANCES - EMERGENCIES

Mr. Brown introduced COUNCIL BILL NO. 2017-101 - AN ORDINANCE approving Work Authorization with Allgeier Martin & Associates Inc. in the not to exceed amount of Sixty-Eight Thousand Nine Hundred Twenty-Three and No/100 Dollars ($68,923.00) for engineering services associated Digesters at the Turkey Creek Wastewater Treatment Facility and containing an emergency clause. Motion by Mr. Brown, second by Mr. West that Council Bill No. 2017-101 be approved with amendments on an emergency basis. Voting in favor were Council Members: Brown, Colbert-Kean, McCreary, Shaw, Seibert, Stanley, Stinnett and West, 8. Nays: 0. Absent: 1, Lewis. The Council Bill was declared Adopted and entitled **Ordinance No. 2017-005**

Mr. Stanley introduced COUNCIL BILL NO. 2017-102- AN ORDINANCE approving the purchase of property at 2705 S. Joplin Avenue, for the 28th and Main Storm Water Improvement Project, in the City of Joplin, Jasper County, Missouri and authorizing the payment of Eight Thousand and 00/100 Dollars ($8,000.00) and containing an emergency clause. Motion by Mr. Stanley, second by Mr. Shaw that Council Bill No. 2017-102 be approved on an emergency basis. Voting in favor were Council Members: Brown, Colbert-Kean, McCreary, Shaw, Seibert, Stanley, Stinnett and West, 8. Nays: 0. Absent: 1, Lewis. The Council Bill was declared Adopted and entitled **Ordinance No. 2017-006**

Mr. Shaw introduced COUNCIL BILL NO. 2017-103 - AN ORDINANCE approving a Cost Share Agreement with the Kansas City Southern Railway Company improvements to the at-grade crossing near 4th Street and Grand Avenue; and authorizing the City Manager to execute said agreement; and containing an emergency clause. Motion by Mr. Shaw, second by Mr. Stanley that Council Bill No. 2017-103 be approved on an emergency basis. Voting in favor were Council Members: Brown, Colbert-Kean, McCreary, Shaw, Seibert, Stanley, Stinnett and West, 8. Nays: 0. Absent: 1, Lewis. The Council Bill was declared Adopted and entitled **Ordinance No. 2017-007**

Mr. Shaw introduced COUNCIL BILL NO. 2017 -104 - AN ORDINANCE approving an amended agreement with Olsson Associates (JET) not to exceed Twenty-Nine Thousand and no/100 Dollars ($29,000.00) for Additional Engineering Services Associated with the Mohaska Trail Improvements from 26th & McClelland to Main Street Project and containing an emergency clause. Motion by Mr. Shaw, second by Mr. Brown that Council Bill No. 2017-104 be approved on an emergency basis. Voting in favor were Council Members: Brown, Colbert-Kean, McCreary, Shaw, Seibert, Stanley, Stinnett and West, 8. Nays: 0. Absent: 1, Lewis. The Council Bill was declared Adopted and entitled **Ordinance No. 2017-008**

Mr. Shaw introduced COUNCIL BILL NO. 2017–350 - AN ORDINANCE approving the contract by and between the City of Joplin and Mid America Environmental for the asbestos removal located at 1013 & 1015 W. 8TH ST. 727 ½ & 729 S. Murphy Ave. in the City of Joplin, Missouri, for the amount of Four Thousand Three Hundred and 00/100 Dollars (4,300.00); providing how the cost thereof shall be paid; how the assessment thereof shall be made; and containing an emergency clause.
Motion by Mr. Shaw, second by Mr. Stinnett that Council Bill No. 2017-350 be approved on an emergency basis. Voting in favor were Council Members: Brown, Colbert-Kean, McCreary, Shaw, Seibert, Stanley, Stinnett and West, 8. Nays: 0. Absent: 1, Lewis. The Council Bill was declared Adopted and entitled **Ordinance No. 2017-009**

Mr. Brown introduced COUNCIL BILL NO. 2017-352 - AN ORDINANCE approving the contract by and between the City of Joplin and Nelson Demolition for the demolition of the structure(s) and clearing of lot area located at 1013 & 1015 W. 8TH ST. 727 ½ & 729 S. Murphy Ave. in the City of Joplin, Missouri, for the amount of Seven Thousand Two Hundred Forty-Nine and 00/100 Dollars (7,249.00); providing how the cost thereof shall be paid; how the assessment thereof shall be made; and containing an emergency clause. Motion by Mr. Brown, second by Mr. West that Council Bill No. 2016-352 be approved on an emergency basis. Voting in favor were Council Members: Brown, Colbert-Kean, McCreary, Shaw, Seibert, Stanley, Stinnett and West, 8. Nays: 0. Absent: 1, Lewis. The Council Bill was declared Adopted and entitled **Ordinance No. 2017-010**

Mr. West introduced COUNCIL BILL NO 2017-353- AN ORDINANCE approving the contract by and between the City of Joplin and B&D Yardbuilders for the demolition of the structure(s) and clearing of lot area and located at 2318 W. 4TH St. in the City of Joplin, Missouri, for the amount of One Thousand One Hundred and 00/100 Dollars (1,100.00); providing how the cost thereof shall be paid; how the assessment thereof shall be made; and containing an emergency clause. Motion by Mr. West, second by Mr. Stinnett that Council Bill No. 2017-353 be approved on an emergency basis. Voting in favor were Council Members: Brown, Colbert-Kean, McCreary, Shaw, Seibert, Stanley, Stinnett and West, 8. Nays: 0. Absent: 1, Lewis. The Council Bill was declared Adopted and entitled **Ordinance No. 2017-011**

Mr. McCreary introduced COUNCIL BILL NO 2017-354- AN ORDINANCE approving the contract by and between the City of Joplin and Nelson Demolition for the demolition of the structure(s) and clearing of lot area and located at 905 S. Monroe in the City of Joplin, Missouri, for the amount of Two Thousand Seven Hundred and Forty-Nine 00/100 Dollars (2,749.00); providing how the cost thereof shall be paid; how the assessment thereof shall be made; and containing an emergency clause. Motion by Mr. McCreary, second by Mr. Brown that Council Bill No. 2017-354 be approved on an emergency basis. Voting in favor were Council Members: Brown, Colbert-Kean, McCreary, Shaw, Seibert, Stanley, Stinnett and West, 8. Nays: 0. Absent: 1, Lewis. The Council Bill was declared

Adopted and entitled **Ordinance No. 2017-012**

Mr. Stinnett introduced COUNCIL BILL NO. 2017-355- AN ORDINANCE approving the contract by and between the City of Joplin and Jordan Disposal for the demolition of the structure(s) and clearing of lot area and located at 1701 Bird Ave & 914 W. 17TH St. in the City of Joplin, Missouri, for the amount of Three Thousand One Hundred and Ninety-Nine 00/100 Dollars (3,199.00); providing how the cost thereof shall be paid; how the assessment thereof shall be made; and containing an emergency clause. Motion by Mr. Stinnett, second by Mr. Shaw that Council Bill No. 2017-355 be approved on an emergency basis. Voting in favor were Council Members: Brown, Colbert-Kean, McCreary, Shaw, Seibert, Stanley, Stinnett and West, 8. Nays: 0. Absent: 1, Lewis. The Council Bill was declared Adopted and entitled **Ordinance No. 2017-013**

Mr. Stanley introduced COUNCIL BILL NO. 2017-502- AN ORDINANCE authorizing the escrow of funds sufficient to pay the outstanding Refunding Certificates of Participation, Series 2012, of the City of Joplin, Missouri, and authorizing certain documents and actions in connection therewith; amending the Annual Budget of the City of Joplin for the Fiscal Year 2016-2017 as adopted by Ordinance 2016-177 on October 17, 2016; and, containing an emergency clause. Motion by Mr. Stanley, second by Mr. McCreary that Council Bill No. 2017-502 be approved on an emergency basis. Voting in favor were Council Members: Brown, Colbert-Kean, McCreary, Shaw, Seibert, Stanley, Stinnett and West, 8. Nays: 0. Absent: 1, Lewis. The Council Bill was declared Adopted and entitled **Ordinance No. 2017-014**

Mr. Stinnett introduced COUNCIL BILL NO. 2017-503- AN ORDINANCE amending the Annual Budget of the City of Joplin for the Fiscal Year 2015-2016 as adopted by Ordinance 2015-168 on October 19, 2015, to adjust appropriations and containing an emergency clause. Motion by Mr. Stinnett, second by Mr. McCreary that Council Bill No. 2017-503 be approved on an emergency basis. Voting in favor were Council Members: Brown, Colbert-Kean, McCreary, Shaw, Seibert, Stanley, Stinnett and West, 8. Nays: 0. Absent: 1, Lewis. The Council Bill was declared Adopted and entitled **Ordinance No. 2017-015**

Mr. Shaw introduced COUNCIL BILL NO. 2017-504- AN ORDINANCE amending the Annual Budget of the City of Joplin for the Fiscal Year 2016-2017 as adopted by Ordinance 2016-177 on October 17, 2016, to adjust appropriations and containing an emergency clause. Motion by Mr. Shaw, second by Mr. Stinnett that Council Bill No. 2017-504 be approved on an emergency basis.
Voting in favor were Council Members: Brown, Colbert-Kean, McCreary, Shaw, Seibert, Stanley, Stinnett and West, 8. Nays: 0. Absent: 1, Lewis. The Council Bill was declared Adopted and entitled **Ordinance No. 2017-016**

ORDINANCES – FIRST READING

ORDINANCES – SECOND AND THIRD READING
Mr. West introduced COUNCIL BILL NO. 2017-500 - AN ORDINANCE approving a Petition to Establish the 510 Rangeline Community Improvement District and creating the 510 Rangeline Community Improvement District. Motion by Mr. West, second by Mr. Shaw that Council Bill No. 2017-504 be passed on Second and Advanced to Third Reading and Passed. Voting in favor were Council Members: Brown, Colbert-Kean, McCreary, Shaw, Seibert, Stanley, Stinnett and West, 8. Nays: 0. Absent: 1, Lewis. The Council Bill was declared Adopted and entitled **Ordinance No. 2017-017**

UNFINISHED BUSINESS

NEW BUSINESS:
Case 001-2017: 5211 South Main Street – A request for a Site Plan Review for the construction of a skilled nursing facility – Ball Ventures Motion by Mr. Stinnett, second by Mr. West to Approve Case 001-2017. Council consented. 8-0-1.

News from the PIO
If you or our citizens want to know more about the Joplin Police Department, then I'd encourage enrolling in the spring session of the Citizens Police Academy. Offered as a 14-week program, the Academy is FREE of charge and provides an interactive, behind-the-scenes program taught by police officers. The classes are every Thursday evening starting February 2nd from 6:30 to 9 p.m. The Citizens Academy ends on May 4th with a graduation ceremony and dinner. The class size is limited to 25 participants. If interested, citizens can contact the Police Department or go to the Police Department's website at joplinpolice.org.

Joplin Parks and Recreation invites kids out for a fun Valentine's Day Craft Night on Friday, February 10, 2017. Craft time will be held from 4 to 6p.m. This is a drop-in program, meaning participants and their parents can come anytime between 4 and 6 to make their creations. It's open to children ages 5 to 12 and the cost is $5 per child. Pre-registration is requested by February 9th by calling 625-4750 or at joplinparks.org.

Starting in mid-February, American Airlines will be upgrading the Joplin service to Dallas/Ft. Worth by providing a bigger, dual class, aircraft for travelers. The upgraded aircraft will have seating for 66 passengers with a First Class section. This aircraft will accommodate more passengers and provide the dual class service. American Airlines began their service in Joplin in 2011. For more information about the Joplin Regional Airport – where the parking is still free – visit joplinmo.org

More details about these topics can be found on our website, www.joplinmo.org.

Mayor Seibert announced he attended the MLK breakfast at MSSU and read a letter from Gov. Jay Nixon.

Mayor Seibert said Ms. Colbert-Kean had a conflict with being a rep to the Nature Center and has agreed to serve as the Council liaison to the CVB Board. Mr. Stanley has agreed to represent the Nature Center from the Council.

There being no further business the meeting adjourned at 7:41p.m.

Submitted,
Barbara L Hogelin
Barbara L. Hogelin, MMC/MPCC, City Clerk

City of **JOPLIN** **City Council Agenda Item**

Requested Council Meeting Date: February 6, 2017
Council Bill No. 2017-003

Item: **RESOLUTION NO. 2017-003**
Originating Department: PUBLIC WORKS – ENGINEERING

Attachments:

1) Project Location Map
2) Resolution. 2017-003

Department Head: Nicholas A. Heatherly	Date:
Finance Department: Leslie Haase	Date:
City Attorney: Peter C. Edwards	Date:
City Manager: Samuel L. Anselm	Date:

Recommended Action: Council Support of MDNR Application for Trail Improvements and connections to the Jackson Avenue Bridge at Shoal Creek

Background: In August of 2014 the voters passed the Capital Improvements II Sales Tax Fund. One of the projects is the Jackson Avenue Bridge at Shoal Creek.

As a part of the Plan, the construction of trail Connectors to the new bridge are needed.

Discussion:

Currently a grant funding opportunity exists through the Missouri Department of Natural Resources Recreational Trails Program that will allow for trail connector installation to the Jackson Avenue Bridge. The Local match for the RTP project would come from the Capital Improvement sales tax.

Recommendation: Staff recommends approval of the resolution that will support the city's application to the Missouri Department of Natural Resources Recreational Trails Program for grant funding of the Trail Improvements and connections to the Jackson Avenue Bridge at Shoal Creek.

Z:\Newton County MO\County of Newton\Transportation\Jackson Avenue Bridge Replacement\Drawings\XR-EXISTING-PRELIMINARY.dwg, 1/20/2017 3:34:06 PM

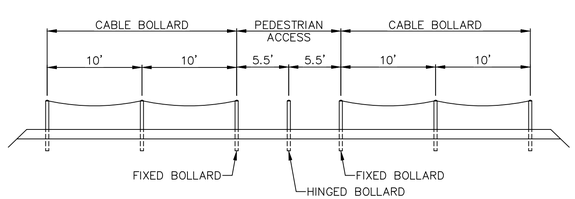

BOLLARDS ELEVATION VIEW

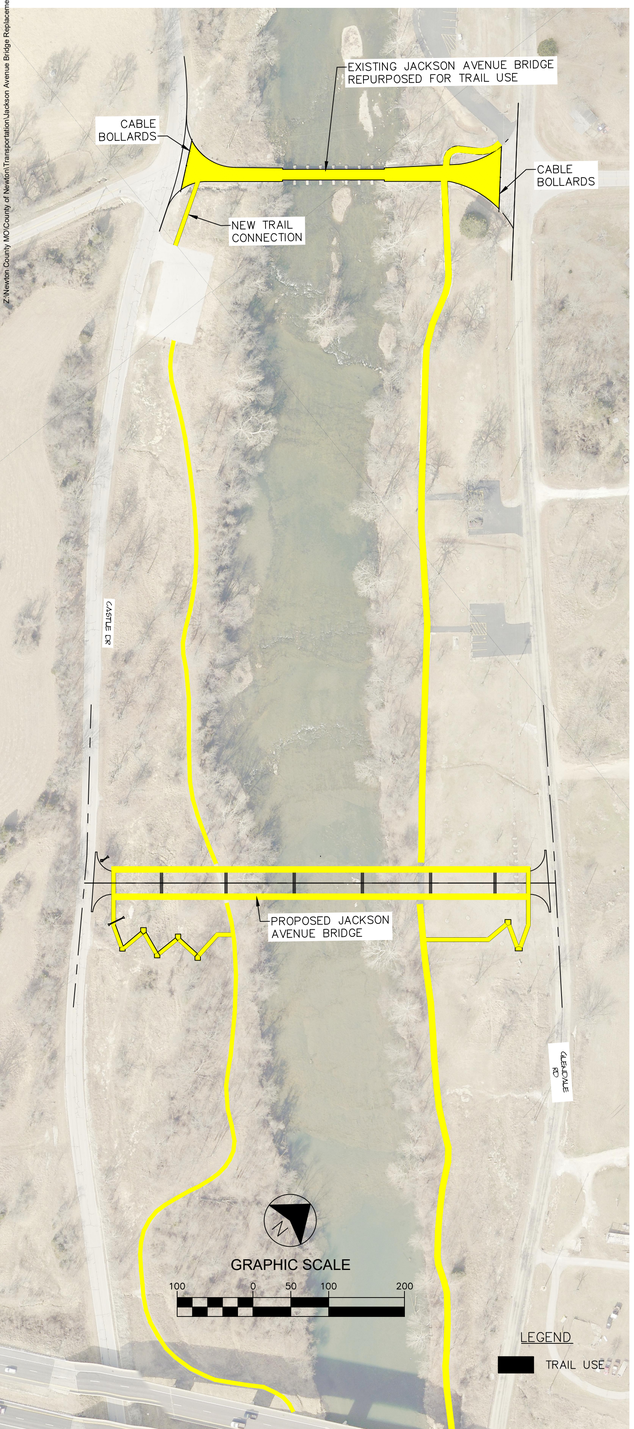

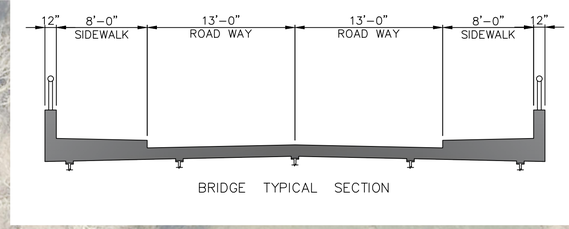

BRIDGE TYPICAL SECTION

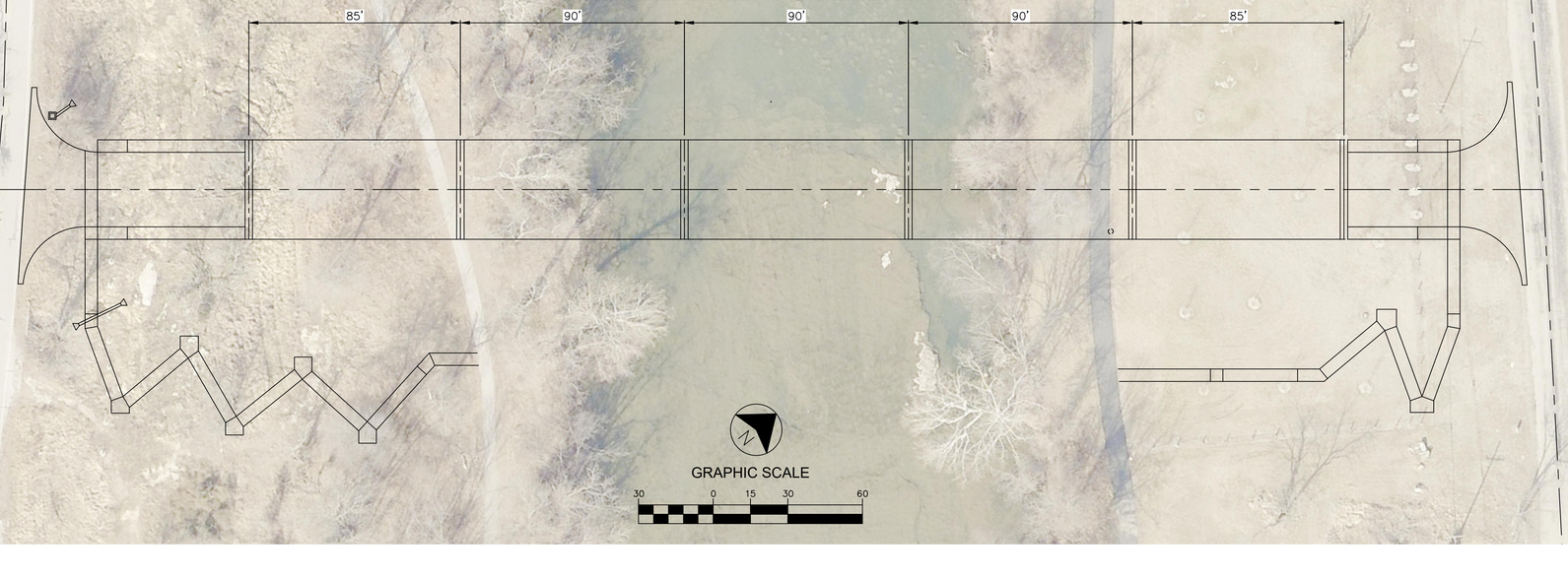

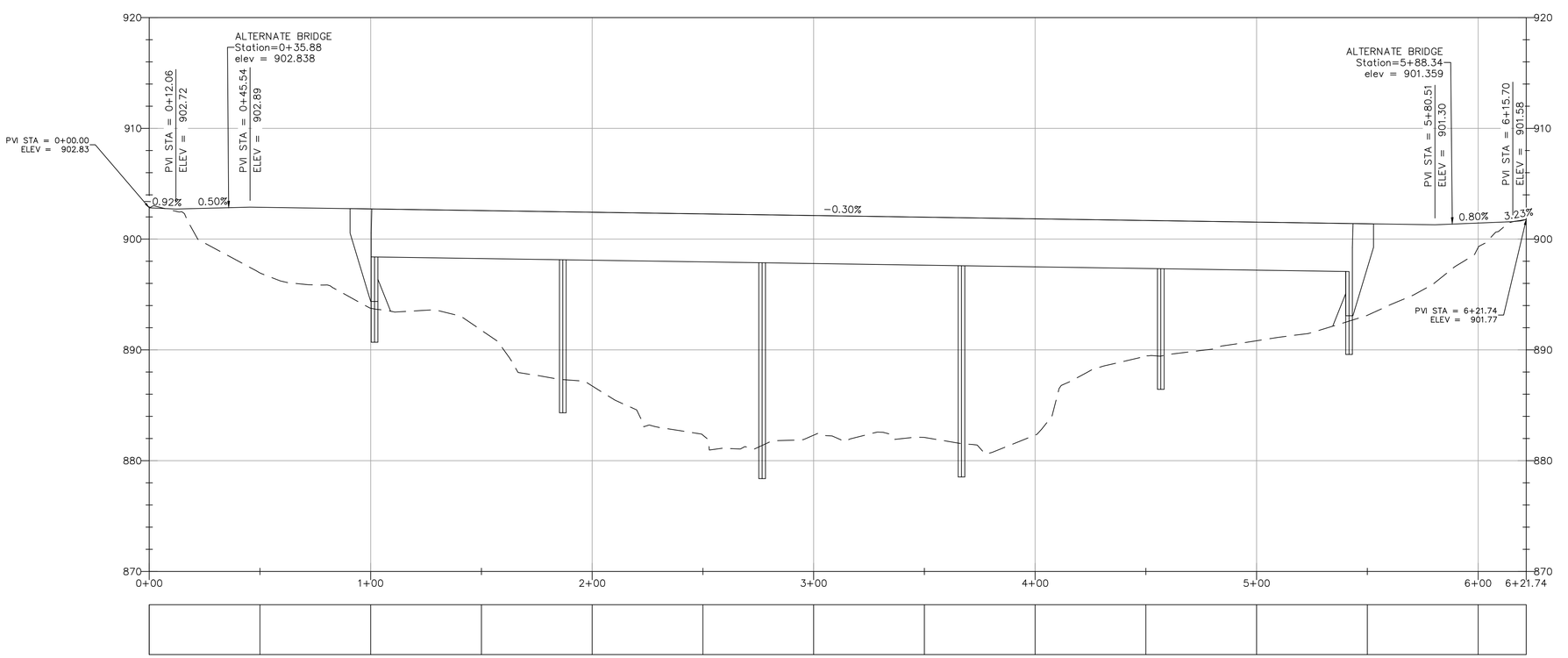

SCALE
VERT. = 1:4
HORIZ. = 1:20
ALTERNATE BRIDGE

RESOLUTION NO. 2017-003

A RESOLUTION Authorizing the Director of Public Works to submit a resolution of support and application to the Missouri Department of Natural Resources Recreational Trails Program for grant funding for the construction of new trail connectors to the new Jackson Avenue Bridge at Shoal Creek.

WHEREAS, the connection to the trail connectors to the new Jackson Avenue Bridge at Shoal Creek, is a critical part of Joplin's comprehensive pedestrian/bicycle trail.

WHEREAS, this is a part of the Master Trail Plan and this is an approved Trail Project.

WHEREAS, the Missouri Department of Natural Resources has funding available through the Missouri Department of Natural Resources Recreation Trails Program for recreational trails projects.

NOW, THEREFORE, BE IT RESOLVED BY THE COUNCIL OF THE CITY OF JOPLIN, MISSOURI, as follows:

Section 1. Nicholas A. Heatherly, Director of Public Works for the City of Joplin is authorized to sign the application for federal assistance and any other official project documents that are necessary to obtain such assistance, including any agreements, contract or other documents that are required by the State of Missouri or the Federal Highway Administration.

Section 2. The City of Joplin currently has the written commitment for the minimum 20% matching share for the project elements that are identified in the application and will allocate the necessary funds to complete the project.

Section 3. In the event a grant is awarded the City of Joplin will commit the necessary financial resources to operate and maintain the completed project in a safe and attractive manner for public access for 25 years and/or will maintain trail maintenance/construction equipment purchased with grant funding for its useful life and in support of trail projects.

Section 4. In the event a grant is awarded, the City of Joplin is prepared to complete the project within the time period identified on the signed project agreement.

Section 5. In the event a grant is awarded, the City of Joplin will comply with all rules and regulations of the Recreational Trails Program, applicable Executive Orders and all state laws that govern the grant applicant during the performance of the project.

PASSED BY THE COUNCIL OF THE CITY OF JOPLIN, MISSOURI, this _____

day of _____, 2017 by a _____vote.

_____

Michael L. Seibert, Mayor

ATTEST:

_____
Barbara L. Hogelin, City Clerk

APPROVED AS TO FORM:

_____
Peter C. Edwards, City Attorney

City of **JOPLIN** City Council Agenda Item

Requested Council Meeting Date: February 6, 2017
Council Bill No. 2017-105
Item: Agreement with Allgeier Martin & Associates for Design Services Associated with the 2017 Public Infrastructure Improvements in NID # IV Phase II.

Originating Department: Public Works – Engineering

Attachments: 1) Agreement-Work Authorization
2) Council Bill No. 2017-105
3) Map

Department Head: Troy Bolander
Department Head: Nicholas A. Heatherly
Finance Department: Leslie Haase
City Attorney: Peter C. Edwards
City Manager: Samuel L. Anselm

Recommended Action: Approval of an Agreement with Allgeier Martin & Associates in the amount of $85,280.00 for the 2017 Public Infrastructure Improvements in NID # IV Phase II Project

Background:
The City allocates CDBG funding annually to make improvements to sidewalks, streets, curb & gutter, storm water and sanitary sewer system in designated neighborhoods. Since 2014, the City has focused CDBG funds towards Neighborhood Improvement District 4, which is bounded by 4th Street, to the South, Broadway to the North, St. Louis to the East, and School to the West. The attached work authorization will be used towards planning and design of a $300,000 sidewalk and street improvement project that will begin construction this summer.

The city envisions the selected firm to serve as an extension of its staff by being assigned specific projects to prepare complete design, construction and bid documents to complete the assigned projects.

Discussion:
This is a continuation previous work including sanitary sewer, storm sewer work, rehab of streets and sidewalks of the Infrastructure improvements in NID 4.

Recommendation: Staff recommends approval of an Agreement with Allgeier Martin & Associates in the amount of $85,280.00 for the 2017 Public Infrastructure Improvements in NID # IV Phase II Project to be approved on an emergency basis per Section 2.12 (6) of the Joplin City Charter.

CITY		ENGINEER	
CITY OF JOPLIN 602 S. MAIN STREET JOPLIN, MO 64801		Name: Allgeier, Martin and Associates, Inc. Address: 7231 E. 24th Street Joplin, MO 64804	
Attention: Mr. David Hertzberg, P.E. DHertzbe@joplinmo.org		Attention: Mr. Michael Atkinson, P.E. Michael.Atkinson@AMCE.com	
Department: Planning and Community Development		Phone: 417-680-7200	Fax: 417-680-7300
Phone: 417-624-0820	Fax: 417-625-4738	NID4 CDBG SIDEWALK IMPROVEMENTS, PHASE II (High Ave., Central Ave., School Ave.)	

WORK AUTHORIZATION NUMBER AMA - NID4 -3
TO AGREEMENT FOR PROFESSIONAL ENGINEERING CONSULTING SERVICES

City and Engineer agree to amend their Agreement for Professional Engineering Consulting Services to include a scope of work and fees for engineering services, by adding the following terms to their Agreement.

1. **Services**. The City agrees to engage the services of the Engineer and the Engineer agrees to perform the services hereinafter set forth in connection with projects described in ***Exhibit A***.

2. **Addition to Services**. The City may add to the Engineer services or delete therefrom activities of a similar nature to those set forth in ***Exhibit A***, provided that the total cost of such work does not exceed the total cost allowance as specified in Paragraph 5 hereof. The Engineer shall undertake such changed activities only upon the direction of the City. All such directives and changes shall be in written form and prepared and approved by the City and shall be accepted and countersigned by the Engineer.

3. Term. The services of the Engineer shall commence as soon as practicable after the execution of this contract, unless otherwise directed in writing, and shall be undertaken and completed in such sequence as to assure their expeditious completion in the light of the purposes of the contract, but in any event, all of the services required hereunder shall be completed as set forth in the schedule for the project which is attached hereto as ***Exhibit A***.

4. **Costs not to Exceed**. The City of Joplin is limited by law with respect to the amount of money it can pay. Therefore, the City has established a fixed sum for this contract, which cannot be exceeded unless this contract is amended. The Engineer providing services hereunder shall be required to keep track of the amount of hours billable under this contract at all times; and any work in excess of the fixed sum shall not be eligible for payment. The Engineer shall notify the City if Engineer anticipates that the contract amount may be exceeded, in order to determine whether or not the City is prepared to increase the total compensation. The Engineer shall establish a billing system showing the amount of money remaining on the contract, which shall be shown in each monthly billing.

5. **Payment**.

a. **Conditioned upon acceptable performance.** The City agrees to pay the Engineer in accordance with the terms set forth in ***Exhibit A***, which shall constitute complete compensation for all services to be rendered under this contract; provided, that where payments are to be made periodically to Engineer for services rendered under this contract, the City expressly reserves the right to disapprove in whole or in part a request for payment where the services rendered during the period for which payment is claimed are not performed in a timely and satisfactory manner in accordance with the schedule and description of services set forth in ***Exhibit A***.

b. **Total compensation not to exceed.** It is expressly understood that in no event will the total compensation and reimbursement to be paid to the Engineer under the terms of this work Authorization Number 3 exceed the sum of Eighty-Five Thousand Two-Hundred Eighty, and no/100 Dollars ($85,280.00).

6. **Insurance**. Without limiting any of the other obligations or liabilities of the Engineer, the Engineer shall secure and maintain at its own cost and expense, throughout the duration of this Contract and until the work is completed and accepted by the City of Joplin, insurance of such types and in such amounts as may be necessary to protect it and the interests of the City of Joplin against all hazards or risks of loss as hereunder specified or which may arise out of the performance of the Contract Documents. The form and limits of such insurance, together with the underwriter thereof in each case, are subject to approval by the City of Joplin. Regardless

limits of such insurance, together with the underwriter thereof in each case, are subject to approval by the City of Joplin. Regardless of such approval, it shall be the responsibility of the Engineer to maintain adequate insurance coverage at all times during the term of the Contract. Failure of the Engineer to maintain coverage shall not relieve it of any contractual responsibility or obligation or liability under the Contract Documents.

The certificates of insurance, including evidence of the required endorsements hereunder or the policies, shall be filed with the City at the time that this contract is signed by the Engineer. All insurance policies shall provide thirty (30) days written notice to be given by the insurance company in question prior to modification or cancellation of such insurance. Such notices shall be mailed, certified mail, return receipt requested, to:

City of Joplin - Public Works, 602 S. Main, Joplin, MO 64801; and

Such policies shall name the City as an additional insured with limits of liability not less than the sovereign immunity limits for Missouri public entities calculated by the Missouri Department of Insurance as of January 1 each calendar year and published annually in the Missouri Register pursuant to Section 537.610, RSMo.
(See, http://insurance.mo.gov/industry/sovimmunity.php).

As of January 1, 2017, the minimum coverage for the insurance referred to herein shall be as set out below:

a. Workers' Compensation....Statutory coverage per RSMo 287.010 et seq.
Employer's Liability..... $1,000,000.00

b. Commercial General Liability Insurance, including coverage for Contractual Liability and Independent Contractors Liability. Such coverage shall apply to bodily injury and property damage on an "Occurrence Form Basis" with limits of at least Two Million Seven Hundred Sixty Two Thousand Seven Hundred Eighty Nine and no/100 Dollars ($2,762,789.00) for all claims arising out of a single accident or occurrence and at least Four Hundred Fourteen Thousand Four Hundred Eighteen and no/100 Dollars ($414,418.00) with respect to injuries and/or death of any one person in a single occurrence and an amount not less than at least $1,000,000 for all claims to property arising out of a single occurrence and at least $100,000 to any one owner with respect to damages to property. Engineer agrees that the proceeds of such insurance policy shall first be used to pay any award, damages, costs, and/or attorneys' fees incurred by or assessed against City, its employees, officers and agents, before payment of any award, damages, costs or attorneys fees of Engineer, its employees, officers or agents. Engineer agrees to cause its insurer to name City as an additional insured on such insurance policy, including the City as an additional insured for coverage under its products-completed operations hazard, and said policy shall be primary and noncontributory.

c. Automobile Liability Insurance covering bodily injury and property damage for owned, non-owned and hired vehicles, with limits of at least Two Million Seven Hundred Sixty Two Thousand Seven Hundred Eighty Nine and no/100 Dollars ($2,762,789.00) for all claims arising out of a single accident or occurrence and at least Four Hundred Fourteen Thousand Four Hundred Eighteen and no/100 Dollars ($414,418.00) with respect to injuries and/or death of any one person in a single accident or occurrence.

d. Errors and Omissions Insurance. The Engineer shall maintain a professional liability insurance policy in the amount of $1,000,000.00. This policy shall remain in full force and effect for a period of one year after completion and acceptance by the City of the construction of the project.

e. Subcontracts. In case any or all of this work is sublet, the Engineer shall require the subcontractor to procure and maintain all insurance required in subparagraphs (A), (B) and (C) hereof and in like amounts. Engineer shall require any and all subcontractors with whom it enters into a contract to perform work on this project to protect the City of Joplin through insurance against applicable hazards or risks and shall, upon request of the City, provide evidence of such insurance.

f. Notice. The Engineer and/or subcontractor shall furnish the City prior to beginning the work satisfactory proof of carriage of all the insurance required by this contract, with the provision that policies shall not be canceled, modified or non-renewed without thirty (30) days written notice to the City of Joplin.

g. Legislative or Judicial Changes. In the event the scope or extent of the City's tort liability as a governmental entity as described in Section 537.600 through 537.650 RSMo is broadened or increased during the term of this agreement by legislative or judicial action, the City may require Engineer, upon 10 days written notice, to execute a contract addendum whereby the Engineer agrees to provide, at a price not exceeding Engineer's actual increased premium cost, additional liability insurance coverage as the

7. All other terms and conditions of the original Agreement shall remain in effect.

IN WITNESS WHEREOF, the parties hereto have set their hands and seals on the day and year herein stated.

REVIEWED FOR APPROVAL

_____

Name & Title of Staff Project Manager

CERTIFICATE OF DIRECTOR OF FINANCE

I certify that the expenditure contemplated by this document is within the purpose of the appropriation to which it is to be charged and that there is an unencumbered balance of appropriated and available funds to pay therefore.

_____

Leslie Haase, Director of Finance

APPROVED AS TO FORM

_____

Peter Edwards, City Attorney

Engineer: Allgeier, Martin and Associates, Inc.

By: Michael Atkinson

Printed Name: Michael Atkinson, P.E.

Title: Vice President

Date: 9-26-2016

CITY OF JOPLIN, MISSOURI

By: _____

Nicholas A. Heatherly, P.E.
Public Works Director

Date: _____

Exhibit A – TABLE OF CONTENTS

Exhibit A Engineering Services Agreement 6-20

Attachment Number One to Exhibit A 21

Services 21

Terms 22

Payment/Estimated Fee 23

Attachment Number Two to Exhibit A – Project Location Boundary Map 24

Attachment Number Three to Exhibit A – Rate Schedule 25

Attachment Number Four to Exhibit A – Project Task Schedule 26

Attachment Number Five to Exhibit A – Certificate of Liability Insurance 27

Exhibit A

Project Name/Description NID4 CDBG Sidewalk Improvements Phase II

Consultant Allgeier, Martin and Associates, Inc.

Engineering Services Agreement

Article 1 of the Agreement is supplemented to include the following agreement of the parties.

Engineer shall provide Basic and Additional Services as set forth below.

PART 1 – BASIC SERVICES *All deliverables referred to in the agreement shall also be provided in an electronic format to be specified by the City.*

A1.01 *Conceptual Phase*

A. Engineer shall:

1. Consult with Owner to define and clarify Owner's requirements for the Project, including design objectives and constraints, space, capacity and performance requirements, flexibility, and expandability, and any budgetary limitations, and identify available data, information, reports, facilities plans, and site evaluations.

   If Owner has already identified one or more potential solutions to meet its Project requirements, then proceed with the study and evaluation of such potential solutions. Options will be discussed and agreed to by Engineer at scoping meeting.

2. Identify potential solution(s) to meet Owner's Project requirements, as needed.

3. Study and evaluate the potential solution(s) to meet Owner's Project requirements.

4. Visit the Site, or potential Project sites, to review existing conditions and facilities, unless such visits are not necessary or applicable to meeting the objectives of the Study and Report Phase.

5. Advise Owner of any need for Owner to obtain, furnish, or otherwise make available to Engineer additional Project-related data and information, for Engineer's use in the study and evaluation of potential solution(s) to Owner's Project requirements, and preparation of a related report.

6. After consultation with Owner, recommend to Owner the solution(s) which in Engineer's judgment meet Owner's requirements for the Project.

7. Identify, consult with, and analyze requirements of governmental authorities having jurisdiction to approve the portions of the Project to be designed or specified by Engineer, including but not limited to mitigating measures identified in an environmental assessment for the Project.

8. Prepare a conceptual report (the "Report") which will, as appropriate, contain schematic layouts, sketches, and conceptual design criteria with appropriate exhibits to indicate the agreed-to requirements, considerations involved, and

Engineer's recommended solution(s). For each recommended solution Engineer will provide the following, which will be separately itemized: opinion of probable Construction Cost; proposed allowances for contingencies; the estimated total costs of design, professional, and related services to be provided by Engineer and its Consultants; and, on the basis of information furnished by Owner, a tabulation of other items and services included within the definition of Total Project Costs.

9. Advise Owner of any need for Owner to provide data or services of the types described in Exhibit B, for use in Project design, or in preparation for Contractor selection and construction.

10. ~~When mutually agreed, assist Owner in evaluating the possible use of building information modeling; civil integrated management; geotechnical baselining of subsurface site conditions; innovative design, contracting, or procurement strategies; or other strategies, technologies, or techniques for assisting in the design, construction, and operation of Owner's facilities. The subject matter of this paragraph shall be referred to in Exhibit A and B as "Project Strategies, Technologies, and Techniques."~~

11. If requested to do so by Owner, assist Owner in identifying opportunities for enhancing the sustainability of the Project, and pursuant to Owner's instructions plan for the inclusion of sustainable features in the design.

12. Develop a scope of work and survey limits for any topographic and other surveys necessary for design.

13. Perform or provide the following other Study and Report Phase tasks or deliverables:

14. Furnish 6 review copies of the Report and any other Study and Report Phase deliverables to Owner by the due date and review by phone or in person with Owner.

15. Revise the Report and any other Study and Report Phase deliverables in response to Owner's comments, as appropriate, and furnish 6 copies of the revised Report and any other Study and Report Phase deliverables to the Owner by the agreed upon due date.

B. Engineer's services under the Study and Report Phase will be considered complete on the date when Engineer has delivered to Owner the revised Report and any other Study and Report Phase deliverables.

C. Billing/Payment Processing Options

1. Request for payment may be submitted at appropriate intervals during the contract. Application for payment must include a detailed breakdown of deliverables completed as well as specific tasks or percentages of specific tasks completed. Payment schedule will be at the approval of the city.

2. ~~Deliverables option as determined by engineering staff on a project by project basis. Example: 30 percent – Preliminary plans, 60 percent Right of Way plans, 90 percent Final plans and bid documents, 100 percent project completion.~~

A1.02 Preliminary Design Phase - (30 percent plans)

A. Proceed with Preliminary Design Phase after the completion of the Conceptual phase which includes: Acceptance by Owner of the Conceptual Report and any other Study and Report Phase deliverables; selection by Owner of a recommended solution; issuance by Owner of any instructions for use of Project Strategies, Technologies, and Techniques, or for inclusion of sustainable features in the design, and Indication by Owner of any specific modifications or changes in the scope, extent, character, or design requirements of the Project desired by Owner.

1. Prepare Preliminary Design Phase documents consisting of final design criteria, preliminary drawings, outline specifications, and written descriptions of the Project.

2. Include on plans, property lines, structure locations, ownership names and contact information.

3. In preparing the Preliminary Design Phase documents, use any specific applicable Project Strategies, Technologies, and Techniques authorized by Owner during or following the Study and Conceptual Phase, and include sustainable features, as appropriate, pursuant to Owner's instructions.

4. Provide necessary field surveys, topographic and utility mapping for Engineer's design purposes. Comply with the scope of work and procedure for the identification and mapping of existing utilities as defined by Section A1.03 "Utility Requirements" and Section A1.04 "Survey Services"

5. Visit the Site as needed to prepare the Preliminary Design Phase documents.

6. Advise Owner if additional reports, data, information, or services of the types described are necessary and assist Owner in obtaining such reports, data, information, or services.

7. Continue to assist Owner with Project Strategies, Technologies, and Techniques that Owner has chosen to implement.

8. Based on the information contained in the Preliminary Design Phase documents, prepare a revised opinion of probable Construction Cost, and assist Owner in tabulating the various cost categories which comprise Total Project Costs.

9. Obtain and review Owner's instructions regarding Owner's procurement of construction services (including instructions regarding advertisements for bids, instructions to bidders, and requests for proposals, as applicable), Owner's construction contract practices and requirements, insurance and bonding requirements, electronic transmittals during construction, and other information necessary for the finalization of Owner's bidding-related documents (or requests for proposals or other construction procurement documents), and Construction Contract Documents. Also obtain and review copies of Owner's design and construction standards, Owner's standard forms, general conditions, supplementary conditions, text, and related documents or content for Engineer

to include in the draft bidding-related documents (or requests for proposals or other construction procurement documents), and in the draft Construction Contract Documents, when applicable.

10. Development communication plan for project: considering the use of door hangers, letters, public meetings, changeable message boards.

11. Furnish 6 review copies of the Preliminary Design Phase documents, opinion of probable Construction Cost, and any other Preliminary Design Phase deliverables to Owner by established due date, and review them with Owner. Owner shall submit to Engineer any comments regarding the furnished items.

12. Revise the Preliminary Design Phase documents, opinion of probable Construction Cost, and any other Preliminary Design Phase deliverables in response to Owner's comments, as appropriate, and furnish to Owner 6 copies of the revised Preliminary Design Phase documents, revised opinion of probable Construction Cost, and any other deliverables by the specified due date.

13. Engineer's services under the Preliminary Design Phase will be considered complete on the date when Engineer has delivered to Owner the revised Preliminary Design Phase documents, revised opinion of probable Construction Cost, and any other Preliminary Design Phase deliverables.

A1.03 *Utility Requirements*

A. Make notification to utilities during conceptual phase of preliminary design process. Communication to be made in a specific, documented format. (As detailed in item D).

B. Based on specific utility feedback, and field observation, identify potential high expense utility relocation issues.

C. Prepare and present plan for city review, detailing significant utility conflicts, proposed pothole locations, and associated costs for verifying existing utilities. Potholing process to include horizontal and vertical alignment and depth details. Details will be included in 30 percent plan completion, final right of way plans, and final construction plans. Necessary corrective action to address incomplete or inaccurate details may be subject to errors and omissions insurance claim.

D. Submit utility report at 30 percent submittal and close out of project. Utility report to include representatives contacted, meeting dates, and a summary of discussions, requests, observations and/or concerns. (See City of Joplin utility notification form)

A1.04 Surveying Services – General

A. Control Survey

All horizontal control for the project will be based on the Missouri State Plane Coordinate System of 1983, West Zone.
All vertical control for the project will be based on the North American Vertical Datum of 1988 (NAVD 88) provided by NOAA's National Geodetic Survey (NGS).

Control points and temporary bench marks will be set inter-visible and in strategic locations along the project route so as to be conveniently used during all phases of the project, including construction.

B. Engineering Survey
Provide topographic engineering survey for the length of the project to facilitate design. Provide a survey of all existing surface and sub-surface utilities in the project corridor.

C. Property Boundary Survey/Right-of-way Survey/Easements
Provide a boundary survey or surveys to locate the existing Right-of-Way/Easements for the length of the project, the adjacent property lines of the parcels along the project, and all existing easements of record encumbering each property that will affect the project. Consultant will be responsible for ordering title work for each parcel along the project route and procuring existing right-of-way documents and/or right-of-way plans.

D. Right-of-way and Easement Description Preparation
Upon final approval of the Right-of-Way/Project Plans consultant will provide descriptions and exhibit drawings for all property right acquisitions including, but not limited to: right-of-way takings, permanent easements and temporary easements.

E. Right-of-way and Easement Staking

During the property negotiation phase of the project it may be necessary to stake the proposed right-of-way and/or easement locations to assist the right-of-way agent. Upon request, the consultant will temporarily stake the proposed right-of-way/easement locations with wooden lathe to allow the property owner to visually inspect the location of such.

Pre-Construction Phase – On projects that will require the relocation of existing utilities prior to the award of the construction contract the consultant shall temporarily stake the location of the Right-of-Way and/or easements at points predetermined by Owner. This service will be provided one (1) time as a part of the contract. Any additional staking, if required by utility contractors due to the destruction of the temporary stakes, will be done at the advertised hourly rate and billed back to the utility contractor who is found to be responsible for removing the original stakes.

F. Existing United States Public Land Survey System Corners

All horizontal control for the project will be based on the Missouri State Plane Coordinate System of 1983, West Zone.
All vertical control for the project will be based on the North American Vertical Datum of 1988 (NAVD 88) provided by NOAA's National Geodetic Survey (NGS).

Control points and temporary bench marks will be set inter-visible and in strategic locations along the project route so as to be conveniently used during all phases of the project, including construction.

B. Engineering Survey
Provide topographic engineering survey for the length of the project to facilitate design. Provide a survey of all existing surface and sub-surface utilities in the project corridor.

C. Property Boundary Survey/Right-of-way Survey/Easements
Provide a boundary survey or surveys to locate the existing Right-of-Way/Easements for the length of the project, the adjacent property lines of the parcels along the project, and all existing easements of record encumbering each property that will affect the project. Consultant will be responsible for ordering title work for each parcel along the project route and procuring existing right-of-way documents and/or right-of-way plans.

D. Right-of-way and Easement Description Preparation
Upon final approval of the Right-of-Way/Project Plans consultant will provide descriptions and exhibit drawings for all property right acquisitions including, but not limited to: right-of-way takings, permanent easements and temporary easements.

E. Right-of-way and Easement Staking

During the property negotiation phase of the project it may be necessary to stake the proposed right-of-way and/or easement locations to assist the right-of-way agent. Upon request, the consultant will temporarily stake the proposed right-of-way/easement locations with wooden lathe to allow the property owner to visually inspect the location of such.

Pre-Construction Phase – On projects that will require the relocation of existing utilities prior to the award of the construction contract the consultant shall temporarily stake the location of the Right-of-Way and/or easements at points predetermined by Owner. This service will be provided one (1) time as a part of the contract. Any additional staking, if required by utility contractors due to the destruction of the temporary stakes, will be done at the advertised hourly rate and billed back to the utility contractor who is found to be responsible for removing the original stakes.

F. Existing United States Public Land Survey System Corners

All existing USPLSS corners that may/will be removed or altered as a result of this project must be referenced and re-established according to 20 CSR 2030-17.020 and 20 CSR 2030-17.030.

G. Survey Records

Consultant shall provide to Owner originals or copies of all survey records relevant to the project. These records shall include, but are not limited to: survey notes, research records, computations, calculations and drawings.

H. Other Services

Services not covered by A through F that are determined in the scoping meeting to be necessary for completion of the project.

A1.05 Right of Way Plan Phase – 60 percent plans

A. Determine parcels and parcel ownership information to be included on right of way plans.

B. Determine parcel size.

C. Prepare R.O.W. plan tabulation sheet.

D. Prepare R.O.W. plan sheets showing easement and right of way takings.

E. Furnish 6 review copies of the Right of Way Plan Phase documents, opinion of probable Right of Way Cost, and any other Right of Way Plan Phase deliverables to Owner by established due date, and review them with Owner. Owner shall submit to Engineer any comments regarding the furnished items.

F. Revise the Right of Way Plan Phase documents, opinion of probable Right of Way Cost, and any other Right of Way Plan Phase deliverables in response to Owner's comments, as appropriate, and furnish to Owner 6 copies of the revised Right of Way Plan Phase documents, revised opinion of probable Right of Way Cost, and any other deliverables by the specified due date.

G. Engineer's services under the Right of Way Plan Phase will be considered complete on the date when Engineer has delivered to Owner the revised Right of Way Plan Phase documents, revised opinion of probable Right of Way Cost, and any other Right of Way Plan Phase deliverables.

A1.06 Final Design Phase

A. After acceptance by Owner of the Preliminary Design Phase documents, revised opinion of probable Construction Cost as determined in the Preliminary Design Phase, and/or any other Right of Way plan documents, subject to any Owner-directed modifications or changes in the scope, extent, character, or design requirements of or for the Project, and upon written authorization from Owner, Engineer shall:

1. Prepare final Drawings and Specifications indicating the scope, extent, and character of the Work to be performed and furnished by Contractor.

2. Visit the Site as needed to assist in preparing the final Drawings and Specifications.

3. Provide technical criteria, written descriptions, and design data for Owner's use in filing applications for permits from or approvals of governmental authorities having jurisdiction to review or approve the final design; assist Owner in consultations with such authorities; and revise the Drawings and Specifications in response to directives from such authorities, as appropriate.

4. Advise Owner of any recommended adjustments to the opinion of probable Construction Cost.

5. After consultation with Owner, include in the Construction Contract Documents any specific protocols for the transmittal of Project-related correspondence, documents, text, data, drawings, information, and graphics, in electronic media or digital format, either directly, or through access to a secure Project website. Any such protocols shall be applicable to transmittals between and among Owner, Engineer, and Contractor during the Construction Phase and Post-Construction Phase, and unless agreed otherwise shall supersede any conflicting protocols previously established for transmittals between Owner and Engineer.

6. Assist Owner in assembling known reports and drawings of Site conditions, and in identifying the technical data contained in such reports and drawings upon which bidders or other prospective contractors may rely.

7. In addition to preparing the final Drawings and Specifications, assemble drafts of other Construction Contract Documents based on specific instructions and contract forms, text, or content received from Owner.

8. Prepare or assemble draft bidding-related documents (or requests for proposals or other construction procurement documents), based on the specific bidding or procurement-related instructions and forms, text, or content received from Owner.

9. Contract shall include contractor provided changeable message signs to communication construction information.

10. Furnish for review by Owner, its legal counsel, and other advisors, 6 copies of the final drawings and Specifications, assembled drafts of other construction Contract Documents, the draft bidding-related documents (or requests for proposals or other construction procurement documents), and any other final design Phase deliverables, by the established due date, with the Final Design Phase, and review them with Owner. Owner shall submit to Engineer any comments regarding the furnished items, and any instructions for revisions.

B. Engineer's services under the Final Design Phase will be considered complete on the date when Engineer has delivered to Owner the final Drawings and Specifications, other assembled Construction Contract Documents, bidding-related documents (or requests for

proposals or other construction procurement documents), and any other Final Design Phase deliverables.

C. In the event that the Work designed or specified by Engineer is to be performed or furnished under more than one prime contract, or if Engineer's services are to be separately sequenced with the work of one or more prime Contractors (such as in the case of fast-tracking), Owner and Engineer shall, prior to commencement of the Final Design Phase, develop a schedule for performance of Engineer's services during the Final Design, Bidding or Negotiating, Construction, and Post-Construction Phases in order to sequence and coordinate properly such services as are applicable to the work under such separate prime contracts.

A1.07 Bidding Phase

A. After acceptance by Owner of the final Drawings and Specifications, other Construction Contract Documents, bidding-related documents (or requests for proposals or other construction procurement documents), and the most recent opinion of probable Construction Cost as determined in the Final Design Phase, and upon written authorization by Owner to proceed, Engineer shall:

1. Advertise for and obtain bids or proposals for the Work, assist Owner in issuing assembled design, contract, and bidding-related documents (or requests for proposals or other construction procurement documents) to prospective contractors, and where applicable, maintain a record of prospective contractors to which documents have been issued, attend pre-bid conferences, if any, and receive and process contractor deposits or charges for the issued documents.

2. Prepare and issue Addenda as appropriate to clarify, correct, or change the issued documents.

3. Provide information or assistance needed by Owner in the course of any review of proposals with prospective contractors.

4. If Federal funding is involved, set up prequalification's for contractor. This includes researching all applicable debarment & qualified contractor's lists & providing this documentation in the project file

5. Consult with Owner as to the qualifications of subcontractors, suppliers, and other individuals and entities proposed by prospective contractors, for those portions of the Work as to which review of qualifications is required by the issued documents.

6. If the issued documents require, the Engineer shall evaluate and determine the acceptability of "or equals" and substitute materials and equipment proposed by prospective contractors, provided that such proposals are allowed by the bidding-related documents

7. Attend the bid opening, prepare bid tabulation sheets to meet Owner's schedule, and assist Owner in evaluating bids, assembling final contracts for the Work for

execution by Owner and Contractor, and in issuing notices of award of such contracts.

B. The Bidding Phase will be considered complete upon commencement of the Construction Phase.

A1.08 Construction Phase

A. Upon successful completion of the Bidding and Negotiating Phase, and upon written authorization from Owner, Engineer shall:

1. *General Administration of Construction Contract:* Consult with Owner and act as Owner's representative as provided in the Construction Contract. The extent and limitations of the duties, responsibilities, and authority of Engineer shall be as assigned below. All of Owner's instructions to Contractor will be issued through Engineer, which shall have authority to act on behalf of Owner in dealings with Contractor to the extent provided in this Agreement and the Construction Contract except as otherwise provided in writing.

2. *Resident Project Representative (RPR):* Provide the services of an RPR at the Site to assist the Engineer (unless provided by the city), and to provide more extensive observation of Contractor's work. Duties, responsibilities, and authority of the RPR are as set forth. The furnishing of such RPR's services will not limit, extend, or modify Engineer's responsibilities or authority except as expressly set forth

It is understood that materials testing shall be performed by an Independent Testing laboratory furnished by the Contractor as specified in the the Construction Contract.

3. *Selection of Independent Testing Laboratory:* Assist Owner in the selection of an independent testing laboratory to perform the services identified.

4. *Pre-Construction Conference:* Participate in a pre-construction conference prior to commencement of Work at the Site.

5. *Electronic Transmittal Protocols:* Consultant shall follow City of Joplin protocols shown below.

6. *Original Documents:* If requested by Owner to do so, maintain and safeguard during the Construction Phase at least one original printed record version of the Construction Contract Documents, including Drawings and Specifications signed and sealed by Engineer and other design professionals in accordance with applicable Laws and Regulations. Throughout the Construction Phase, make such original printed record version of the Construction Contract Documents available to Contractor and Owner for review.

7. *Schedules:* Receive, review, and determine the acceptability of any and all schedules that Contractor is required to submit to Engineer, including the Progress Schedule, Schedule of Submittals, and Schedule of Values.

8. *Baselines and Benchmarks:* As appropriate, establish baselines and benchmarks for locating the Work which in Engineer's judgment are necessary to enable Contractor to proceed.

9. *Visits to Site and Observation of Construction:* In connection with observations of Contractor's Work while it is in progress:

   a) Make visits to the Site at intervals appropriate to the various stages of construction, as Engineer deems necessary, to observe as an experienced and qualified design professional the progress of Contractor's executed Work. Such visits and observations by Engineer, and the Resident Project Representative, if any, are not intended to be exhaustive or to extend to every aspect of the Work or to involve detailed inspections of the Work beyond the responsibilities specifically assigned to Engineer in this Agreement and the Construction Contract Documents, but rather are to be limited to spot checking, selective sampling, and similar methods of general observation of the Work based on Engineer's exercise of professional judgment, as assisted by the Resident Project Representative, if any. Based on information obtained during such visits and observations, Engineer will determine in general if the Work is proceeding in accordance with the Construction Contract Documents, and Engineer shall keep Owner informed of the progress of the Work.

   b) The purpose of Engineer's visits to the Site, and representation by the Resident Project Representative, if any, at the Site, will be to enable Engineer to better carry out the duties and responsibilities assigned to and undertaken by Engineer during the Construction Phase, and, in addition, by the exercise of Engineer's efforts as an experienced and qualified design professional, to provide for Owner a greater degree of confidence that the completed Work will conform in general to the Construction Contract Documents and that Contractor has implemented and maintained the integrity of the design concept of the completed Project as a functioning whole as indicated in the Construction Contract Documents. Engineer shall not, during such visits or as a result of such observations of the Work, supervise, direct, or have control over the Work, nor shall Engineer have authority over or responsibility for the means, methods, techniques, sequences, or procedures of construction selected or used by any Constructor, for security or safety at the Site, for safety precautions and programs incident to any Constructor's work in progress, for the coordination of the Constructors' work or schedules, nor for any failure of any Constructor to comply with Laws and Regulations applicable to furnishing and performing of its work. Accordingly, Engineer neither guarantees the performance of any Constructor nor assumes responsibility for any Constructor's failure to furnish or perform the Work, or any portion of the Work, in accordance with the Construction Contract Documents.

10. *Defective Work:* Reject Work if, on the basis of Engineer's observations, Engineer believes that such Work is defective under the terms and standards set forth in the Construction Contract Documents. Provide recommendations to Owner regarding whether Contractor should correct such Work or remove and replace such Work, or whether Owner should consider accepting such Work as provided in the Construction Contract Documents.

11. *Compatibility with Design Concept:* If Engineer has express knowledge that a specific part of the Work that is not defective under the terms and standards set forth in the Construction Contract Documents is nonetheless not compatible with

the design concept of the completed Project as a functioning whole, then inform Owner of such incompatibility, and provide recommendations for addressing such Work.

12. *Clarifications and Interpretations:* Accept from Contractor and Owner submittal of all matters in question concerning the requirements of the Construction Contract Documents (sometimes referred to as requests for information or interpretation—RFIs), or relating to the acceptability of the Work under the Construction Contract Documents. With reasonable promptness, render a written clarification, interpretation, or decision on the issue submitted, or initiate an amendment or supplement to the Construction Contract Documents.

13. *Field Orders:* Subject to any limitations in the Construction Contract Documents, Engineer may prepare and issue Field Orders requiring minor changes in the Work.

14. *Change Orders and Work Change Directives:* Recommend Change Orders and Work Change Directives to Owner, as appropriate, and prepare Change Orders and Work Change Directives as required.

    a) Identify discrepancy
    b) Contractor submits pricing
    c) Cost analysis by Project Manager
    d) Submit Conceptual Plan to MoDOT and FHWA, if applicable
    e) Receive conceptual approval from both agencies and give contract Notice to Proceed
    f) Change in work complete, submit official change Order with Justification and copy of conceptual to MoDOT and FHWA if applicable (justification provided by City Project Manager)
    g) After signatures on Change order are complete, notify the contractor.

15. *Differing Site Conditions:* Respond to any notice from Contractor of differing site conditions, including conditions relating to underground facilities such as utilities, and hazardous environmental conditions. Promptly conduct reviews and prepare findings, conclusions, and recommendations for Owner's use.

16. *Shop Drawings, Samples, and Other Submittals:* Review and approve or take other appropriate action with respect to Shop Drawings, Samples, and other required Contractor submittals, but only for conformance with the information given in the Construction Contract Documents and compatibility with the design concept of the completed Project as a functioning whole as indicated by the Construction Contract Documents. Such reviews and approvals or other action will not extend to means, methods, techniques, sequences, or procedures of construction or to safety precautions and programs incident thereto. Engineer shall meet any Contractor's submittal schedule that Engineer has accepted.

17. *Substitutes and "Or-equal":* Evaluate and determine the acceptability of substitute or "or-equal" materials and equipment proposed by Contractor.

18. *Inspections and Tests:*

a) Receive and review all certificates of inspections, tests, and approvals required by Laws and Regulations or the Construction Contract Documents. Engineer's review of such certificates will be for the purpose of determining that the results certified indicate compliance with the Construction Contract Documents and will not constitute an independent evaluation that the content or procedures of such inspections, tests, or approvals comply with the requirements of the Construction Contract Documents. Engineer shall be entitled to rely on the results of such inspections and tests.

b) As deemed reasonably necessary, request that Contractor uncover Work that is to be inspected, tested, or approved.

c) Pursuant to the terms of the Construction Contract, require special inspections or testing of the Work, whether or not the Work is fabricated, installed, or completed.

19. *Change Proposals and Claims:*

a) Review and respond to Change Proposals. Review each duly submitted Change Proposal from Contractor and, within 30 days after receipt of the Contractor's supporting data, either deny the Change Proposal in whole, approve it in whole, or deny it in part and approve it in part. Such actions shall be in writing, with a copy provided to Owner and Contractor. If the Change Proposal does not involve the design (as set forth in the Drawings, Specifications, or otherwise), the acceptability of the Work, or other engineering or technical matters, then Engineer will notify the parties that the Engineer will not resolve the Change Proposal.

b) Provide information or data to Owner regarding engineering or technical matters pertaining to Claims.

20. *Applications for Payment:* Based on Engineer's observations as an experienced and qualified design professional and on review of Applications for Payment and accompanying supporting documentation:

a) Determine the amounts that Engineer recommends Contractor be paid. Recommend reductions in payment (set-offs) based on the provisions for set-offs stated in the Construction Contract. Such recommendations of payment will be in writing and will constitute Engineer's representation to Owner, based on such observations and review, that, to the best of Engineer's knowledge, information and belief, Contractor's Work has progressed to the point indicated, the Work is generally in accordance with the Construction Contract Documents (subject to an evaluation of the Work as a functioning whole prior to or upon Substantial Completion, to the results of any subsequent tests called for in the Construction Contract Documents, and to any other qualifications stated in the recommendation), and the conditions precedent to Contractor's being entitled to such payment appear to have been fulfilled in so far as it is Engineer's responsibility to observe the Work. In the case of unit price Work, Engineer's recommendations of payment will include final determinations of quantities and classifications of the Work (subject to any subsequent adjustments allowed by the Construction Contract Documents).

b) By recommending payment, Engineer shall not thereby be deemed to have represented that observations made by Engineer to check the quality or quantity of Contractor's Work as it is performed and furnished have been exhaustive, extended to every aspect of Contractor's Work in progress, or involved detailed inspections of the Work beyond the responsibilities specifically assigned to Engineer in this Agreement.

21. *Contractor's Completion Documents:* Receive from Contractor, review, and transmit to Owner maintenance and operating instructions, schedules, guarantees, bonds, certificates or other evidence of insurance required by the Construction Contract Documents, certificates of inspection, tests and approvals, and Shop Drawings, Samples, and other data. Receive from Contractor, review, and transmit to Owner the annotated record documents which are to be assembled by Contractor in accordance with the Construction Contract Documents to obtain final payment. The extent of Engineer's review of record documents shall be to check that Contractor has submitted all pages.

22. *Substantial Completion:* Promptly after notice from Contractor that Contractor considers the entire Work ready for its intended use, in company with Owner and Contractor, visit the Site to review the Work and determine the status of completion. Follow the procedures in the Construction Contract regarding the preliminary certificate of Substantial Completion, punch list of items to be completed, Owner's objections, notice to Contractor, and issuance of a final certificate of Substantial Completion. Assist Owner regarding any remaining engineering or technical matters affecting Owner's use or occupancy of the Work following Substantial Completion.

23. *Other Tasks:* Perform or provide the following other Construction Phase tasks or deliverables:

24. *Final Notice of Acceptability of the Work:* Conduct a final visit to the Project to determine if the Work is complete and acceptable so that Engineer may recommend, in writing, final payment to Contractor. Accompanying the recommendation for final payment, Engineer shall also provide a notice to Owner and Contractor in the form of the acceptance identified in MoDOT's LPA Manual, that the Work is acceptable (subject to the provisions of the Notice and Paragraph A1.05.A.21.b) to the best of Engineer's knowledge, information, and belief, and based on the extent of the services provided by Engineer under this Agreement.

25. *Standards for Certain Construction-Phase Decisions:* Engineer will render decisions regarding the requirements of the Construction Contract Documents, and judge the acceptability of the Work, pursuant to the specific procedures set forth in the Construction Contract for initial interpretations, Change Proposals, and acceptance of the Work. In rendering such decisions and judgments, Engineer will not show partiality to Owner or Contractor, and will not be liable to Owner, Contractor, or others in connection with any proceedings, interpretations, decisions, or judgments conducted or rendered in good faith.

B. *Duration of Construction Phase:* The Construction Phase will commence with the execution of the first Construction Contract for the Project or any part thereof and will terminate upon written recommendation by Engineer for final payment to Contractors. If the Project involves more than one prime contract, then Construction Phase services may be rendered

at different times in respect to the separate contracts. Engineer shall be entitled to an equitable increase in compensation if Construction Phase services (including Resident Project Representative services, if any) are required after the original date for

completion and readiness for final payment of Contractor as set forth in the Construction Contract.

A1.09 Post-Construction Phase

A. Upon written authorization from Owner during the Post-Construction Phase, Engineer shall:

1. Together with Owner, visit the Project to observe any apparent defects in the Work, make recommendations as to replacement or correction of defective Work, if any, or the need to repair of any damage to the Site or adjacent areas, and assist Owner in consultations and discussions with Contractor concerning correction of any such defective Work and any needed repairs.

2. Together with Owner, visit the Project within one month before the end of the Construction Contract's correction period to ascertain whether any portion of the Work or the repair of any damage to the Site or adjacent areas is defective and therefore subject to correction by Contractor.

3. Full payment of the final invoice will not be considered until the consultant has electronically furnished the following documents:

a) The city's semi-final inspection letter stating the date of semi-final inspection and listing those who were present.
b) The city's final acceptance letter showing the number of working days or calendar days charged, completion date and the amount of liquidated damages, if any.
c) A final list of acceptance testers used on the project and a certification stating:

"The results of the tests or acceptance samples indicate that material incorporated in the construction work and the construction operations controlled by sampling and testing were in reasonably close conformity with the approved plans and specifications, and such results compare favorably with the results of independent assurance sampling and testing." Any deviations from the specifications must be explained along with the reason for acceptance.

"All field tests were performed in conformity with the governing specifications and the results were in reasonably close conformity with the specifications." Explain any deviations and why the work was accepted.

"The project was constructed substantially in conformity with the plans and specifications for the project."

d) Contractor certification and city recommendation:

Showing the final DBE participation on the project including the DBEs used, the type of work performed, and the dollar amount paid to each DBE.

The city's recommendation regarding the contractor's fulfillment of the DBE requirements. The consultant shall also provide written documentation from each DBE that they were paid in full for the work identified in the Contractor DBE Certification. Examples of documentation from DBEs may include a letter, e-mail, lien waiver or copies of reimbursement checks. If DBE goals were not met, include documentation as to why.

e) Final Invoice

f) Final Detailed Estimate of Quantities

g) Contractor's Affidavit Regarding Settlement of Claims

h) Final Change Order (if needed)

i) Affidavit (Compliance with Prevailing Wage Law)

j) These documents are to be received within 60 days of the Final Inspection date. Final Reimbursement will be processed once all close out documentation has been reviewed and accepted.

B. The Post-Construction Phase services may commence during the Construction Phase and, if not otherwise modified, will terminate twelve months after the commencement of the Construction Contract's correction period.

PART 2 – ADDITIONAL SERVICES

A2.01 *Additional Services Requiring Owner's Written Authorization*

A. If authorized in writing by Owner, Engineer shall provide Additional Services of the types listed below. These services are not included as part of Basic Services and will be paid for by Owner as indicated.

1. Preparation of applications and supporting documents (in addition to those furnished under Basic Services) for private or governmental grants, loans, or advances in connection with the Project; preparation or review of environmental assessments and impact statements; review and evaluation of the effects on the design requirements for the Project of any such statements and documents prepared by others; and assistance in obtaining approvals of authorities having jurisdiction over the anticipated environmental impact of the Project.

2. Undertaking investigations and studies including, but not limited to:

a. Detailed consideration of operations, maintenance, and overhead expenses.

ATTACHMENT NUMBER ONE TO
EXHIBIT A TO WORK AUTHORIZATION NUMBER AMA-NID4-3 TO AGREEMENT
FOR PROFESSIONAL ENGINEERING CONSULTING SERVICES
(Between the City of Joplin, Missouri and Allgeier, Martin and Associates, Inc. for Engineering Services Associated with CDBG NID4 Funding for Street Improvements)

1. SERVICES

Engineer shall provide the City of Joplin, hereinafter referred to as OWNER, with the following services, in addition to those defined under the **"Engineering Services Agreement", Part 1 – Basic Services** attached hereto:

1.1 General

1.1.1 ENGINEER shall perform professional planning, design, bidding, and construction phase services as hereinafter stated which include customary civil, structural, and mechanical engineering services.

1.1.2 Coordinate the planning, design and construction of the sidewalks and street projects with the OWNER and the CDBG funding program having jurisdiction over the project.

1.1.3 In general, the Project consists of the following:

1.1.3.1 Project area boundary is identified in Attachment Number One to Exhibit A.

1.1.3.2 Design of sidewalk improvements for the following: 1.) Sidewalk and curb ramps on the east side of South High Ave. from 2nd St. north to Broadway Ave., 2.) Sidewalk and curb ramp replacement on the north and south side of Central Ave. from Michigan Ave. to School Ave., 3.) Sidewalk and curb ramp replacement on the west side of School Ave. from Jasper Ave. to Broadway and curb ramp replacement on the east side of School Ave. at the intersections of Broadway, Central, 2nd St. and Jasper. Including all work associated with sidewalk improvements within the project area boundary including the preparation of plans and specifications necessary to bid said work.

1.1.3.3 Bidding and Construction Phase Engineering of sidewalk improvements along South High Avenue, Central Avenue, and School Avenue within the project area boundary as described in paragraph 1.1.3.2.

1.1.3.4 Resident Construction Representation Phase services for sidewalk improvements along South High Avenue, Central Avenue, and School Avenue as described in paragraph 1.1.3.2. Services will be provided part time (20 hrs./wk) with an estimated construction duration of 8 weeks.

1.2 Environmental Clearance

1.2.1 The project will be undertaken with the assumption that a categorical exclusion has previously been obtained for the project area and that a full, in-depth NEPA environmental report and associated review will not be required.

1.3 Right-of-Way/Easement Acquisition

1.3.1 Meet with affected property owners in an attempt to secure required easements for sidewalk installation.

1.3.1.1 Services for right-of-way/easement acquisition is anticipated to be provided for a maximum of 4 individual properties.

1.3.2. Provide status report details to OWNER's representatives, as requested, indicating contacts that have been made and status of negotiations.

1.3.3. Obtain signed easement documents from willing participants.

1.3.4. In the event that negotiation for easements is unsuccessful after three attempts, provide to the OWNER a prepared report of negotiations to allow the OWNER to decide the course of future action.

1.3.5 The right-of-way/easements shall be procured in accordance with the requirements of the Uniform Relocation Act.

1.3.6. Arrange for payments, if any, by the OWNER to property owners in exchange for said easements. Any required appraisals, if determined necessary, shall be provided by the ENGINEER as an additional service.

1.3.7. Record and provide OWNER with copies of all executed easements.

1.3.8. Court testimony or attendance at meetings required or requested as part of the condemnation process shall be provided by the ENGINEER as an additional service.

2. TERMS

2.1 The services of the Engineer shall begin as soon as a written Notice to Proceed is provided by the OWNER.

2.2 Distribution of compensation between individual tasks indicated in Section 3 may be altered as necessary to be consistent with services actually rendered, but shall not exceed the total estimated compensation amount unless approved in writing by the OWNER.

2.3 Schedule: The services of the Engineer shall commence as soon as practicable after the execution of this contract and shall be undertaken and completed in such sequence as to assure their expeditious completion in the light of the purposes of the contract, but in any event, ENGINEER shall make good faith effort such that all of the services required hereunder for this Work Authorization scope of work shall be completed no later than April 1, 2018.

3. PAYMENT

3.1 Payment to Engineer shall be at the hourly labor Rates and Non-Labor Rates set forth in the Attachment Number Two to Exhibit A: "RATE SCHEDULE 2015-2016-2017-2018"; with a total compensation ceiling of $85,280, as set forth in Work Authorization Number AMA-NID4-3 to the Agreement for Professional Engineering Consulting Services, Section 5.b. with the estimated maximum fees broken down for respective services in more detail as follows:

Task	Estimated Fee
Design Phase Services (Paragraphs A1.01 - A1.04 & A1.06)	$40,000
Bidding and Construction Phase Engineering Services (Paragraphs A1.07 – A1.09)	$18,000
Part-Time Resident Project Representation Services (Paragraph A1.08)	$17,280
Right-of-Way/Easement Acquisition (Attachment 1 – Section 1.3)	$10,000
Total Estimated Maximum Fee	$85,280

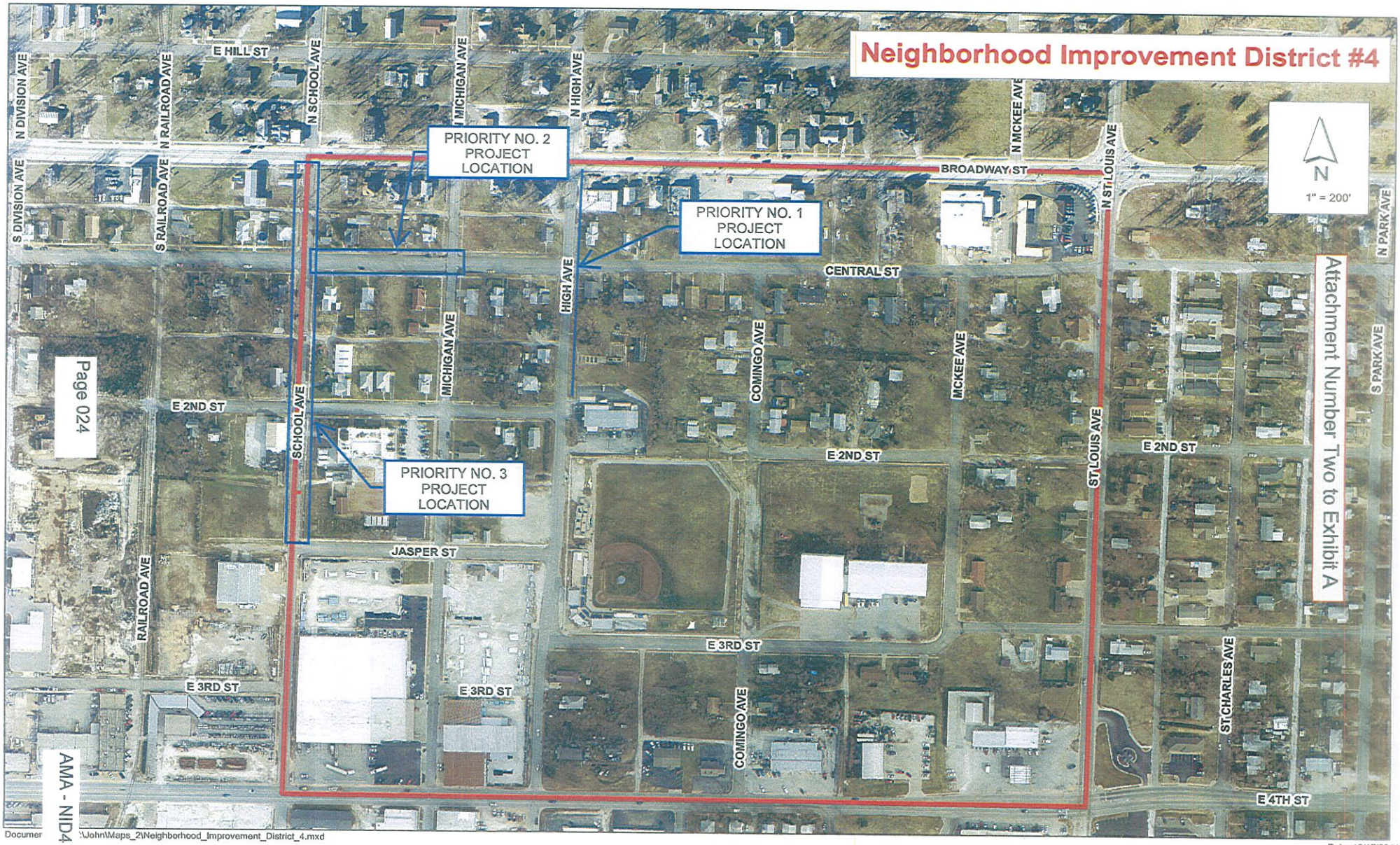
Neighborhood Improvement District #4
PRIORITY NO. 2 PROJECT LOCATION
PRIORITY NO. 1 PROJECT LOCATION
PRIORITY NO. 3 PROJECT LOCATION
N
1" = 200'
E HILL ST
N DIVISION AVE
N RAILROAD AVE
N SCHOOL AVE
N MICHIGAN AVE
N HIGH AVE
N MCKEE AVE
N ST LOUIS AVE
N PARK AVE
BROADWAY ST
S DIVISION AVE
S RAILROAD AVE
CENTRAL ST
HIGH AVE
MICHIGAN AVE
COMINGO AVE
MCKEE AVE
S PARK AVE
E 2ND ST
SCHOOL AVE
ST LOUIS AVE
JASPER ST
RAILROAD AVE
E 3RD ST
ST CHARLES AVE
E 4TH ST
Attachment Number Two to Exhibit A
Page 024
AMA - NID4 - 3
Documer
:\John\Maps_2\Neighborhood_Improvement_District_4.mxd
Date: 10/17/2014

ATTACHMENT NO. 3

ALLGEIER, MARTIN and ASSOCIATES, INC.

Consulting Engineers and Surveyors

RATE SCHEDULE

LABOR RATES

	Hourly Billing Rates			
Classification	Present thru 12/31/2015	01/01/2016 thru 12/31/2016	01/01/2017 thru 12/31/2017	01/01/2018 thru 12/31/2018
Principal/Engineer IV	$180	$185	$190	$195
Principal/Engineer III	$165	$170	$175	$180
Principal/Engineer II	$145	$150	$155	$160
Principal/Engineer I	$130	$135	$140	$145
Designer III/GIS Specialist	$120	$124	$128	$132
Designer/Technician III	$100	$104	$108	$112
Designer/Technician II	$88	$92	$96	$100
Designer/Technician I	$82	$86	$90	$94
Two-Man GPS Survey Crew	$170	$175	$180	$185
One-Man GPS Survey Crew	$130	$135	$140	$145
Three-Man Survey Crew	$185	$190	$195	$200
Two-Man Survey Crew	$145	$150	$155	$160
Registered Land Surveyor II	$155	$160	$165	$170
Registered Land Surveyor I	$135	$140	$145	$150
Survey Party Chief	$82	$86	$90	$94
Survey Crew Member	$66	$69	$72	$76
Right of Way Specialist	$104	$108	$112	$116
Construction Inspector III	$100	$104	$108	$112
Construction Inspector II	$88	$92	$96	$100
Construction Inspector I	$81	$84	$88	$92
Secretary/Word Processor	$66	$69	$72	$76
Print Specialist	$66	$69	$72	$76

Note: All pre-approved overtime hours shall be invoiced at 1½ times the hourly billing rate shown above.

NON-LABOR RATES

Item	Rate
Travel	$0.57 per mile (or current IRS rate)
Subsistence	Actual cost
Lodging	Actual cost
Special Postage or Shipping	Actual cost
Printing	Actual cost
Surveying Materials	Actual cost
Subcontract Specialty Services	Cost + 10%

Attachment No. 4

AMA-NID4-3
NID4 CDBG Sidewalk Improvements - Phase II
(S. High Ave., Central Ave, School Ave.)

ID	Task Name	Duration	Start	Finish
1	**CDBG NID4 Sidewalk Improvement Phase II**	498 days	Wed 11/2/16	Wed 3/14/18
2	*Preliminary Plan*	45 days	Wed 11/2/16	Fri 12/16/16
3	*ROW Plan*	30 days	Sat 12/17/16	Sun 1/15/17
4	*ROW Acquisition*	60 days	Sun 1/15/17	Thu 3/16/17
5	*Utility Relocation*	120 days	Fri 3/17/17	Fri 7/14/17
6	*Final Plans*	120 days	Fri 3/17/17	Fri 7/14/17
7	*City Review & Approval*	35 days	Sat 7/15/17	Fri 8/18/17
8	*Construction Bidding*	28 days	Sat 8/19/17	Fri 9/15/17
9	*Construction Award, Bid Evaluation/Recommendation, Council Award, Executed Contracts*	90 days	Sat 9/16/17	Thu 12/14/17
10	*Construction Start/End*	90 days	Fri 12/15/17	Wed 3/14/18

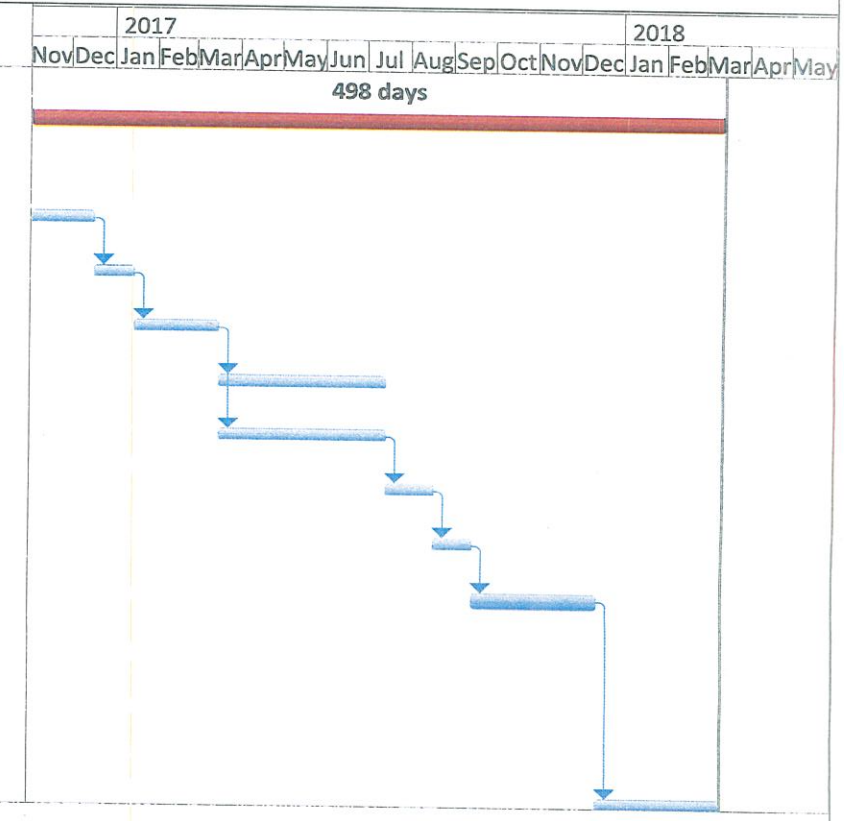

ALLGE-1 OP ID: BC

CERTIFICATE OF LIABILITY INSURANCE

DATE (MM/DD/YYYY) 09/12/2016

THIS CERTIFICATE IS ISSUED AS A MATTER OF INFORMATION ONLY AND CONFERS NO RIGHTS UPON THE CERTIFICATE HOLDER. THIS CERTIFICATE DOES NOT AFFIRMATIVELY OR NEGATIVELY AMEND, EXTEND OR ALTER THE COVERAGE AFFORDED BY THE POLICIES BELOW. THIS CERTIFICATE OF INSURANCE DOES NOT CONSTITUTE A CONTRACT BETWEEN THE ISSUING INSURER(S), AUTHORIZED REPRESENTATIVE OR PRODUCER, AND THE CERTIFICATE HOLDER.

IMPORTANT: If the certificate holder is an ADDITIONAL INSURED, the policy(ies) must be endorsed. If SUBROGATION IS WAIVED, subject to the terms and conditions of the policy, certain policies may require an endorsement. A statement on this certificate does not confer rights to the certificate holder in lieu of such endorsement(s).

PRODUCER The Insurancenter 2901 Arizona Ave Joplin, MO 64804 J. Scott Brothers	CONTACT NAME: Cristi Becker PHONE (A/C, No, Ext): 800-444-8675 FAX (A/C, No): 417-623-0902 E-MAIL ADDRESS: cbecker@theinsurancenter.com
INSURED Allgeier, Martin & Associates P O Box 2627 Joplin, MO 64803-2627	INSURER(S) AFFORDING COVERAGE — NAIC # INSURER A : Transportation Insurance Co — 20494 INSURER B : American Casualty Company of — 20427 INSURER C : Continental Casualty Company — 20443 INSURER D : — INSURER E : — INSURER F : —

COVERAGES **CERTIFICATE NUMBER:** **REVISION NUMBER:**

THIS IS TO CERTIFY THAT THE POLICIES OF INSURANCE LISTED BELOW HAVE BEEN ISSUED TO THE INSURED NAMED ABOVE FOR THE POLICY PERIOD INDICATED. NOTWITHSTANDING ANY REQUIREMENT, TERM OR CONDITION OF ANY CONTRACT OR OTHER DOCUMENT WITH RESPECT TO WHICH THIS CERTIFICATE MAY BE ISSUED OR MAY PERTAIN, THE INSURANCE AFFORDED BY THE POLICIES DESCRIBED HEREIN IS SUBJECT TO ALL THE TERMS, EXCLUSIONS AND CONDITIONS OF SUCH POLICIES. LIMITS SHOWN MAY HAVE BEEN REDUCED BY PAID CLAIMS.

INSR LTR	TYPE OF INSURANCE	ADDL INSD	SUBR WVD	POLICY NUMBER	POLICY EFF (MM/DD/YYYY)	POLICY EXP (MM/DD/YYYY)	LIMITS	
B	X COMMERCIAL GENERAL LIABILITY CLAIMS-MADE X OCCUR GEN'L AGGREGATE LIMIT APPLIES PER: POLICY X PRO-JECT LOC OTHER:			1063177197	12/08/2015	12/08/2016	EACH OCCURRENCE DAMAGE TO RENTED PREMISES (Ea occurrence) MED EXP (Any one person) PERSONAL & ADV INJURY GENERAL AGGREGATE PRODUCTS - COMP/OP AGG	$ 1,000,000 $ 100,000 $ 15,000 $ 1,000,000 $ 2,000,000 $ 2,000,000
B	AUTOMOBILE LIABILITY X ANY AUTO ALL OWNED AUTOS SCHEDULED AUTOS X HIRED AUTOS X NON-OWNED AUTOS			1063177202	12/08/2015	12/08/2016	COMBINED SINGLE LIMIT (Ea accident) BODILY INJURY (Per person) BODILY INJURY (Per accident) PROPERTY DAMAGE (Per accident)	$ 1,000,000 $ $ $
A	X UMBRELLA LIAB X OCCUR EXCESS LIAB CLAIMS-MADE DED RETENTION $			1062449393	12/08/2015	12/08/2016	EACH OCCURRENCE AGGREGATE	$ 5,000,000 $ 5,000,000
C	WORKERS COMPENSATION AND EMPLOYERS' LIABILITY ANY PROPRIETOR/PARTNER/EXECUTIVE OFFICER/MEMBER EXCLUDED? Y/N N/A (Mandatory in NH) If yes, describe under DESCRIPTION OF OPERATIONS below			1063177216	12/08/2015	12/08/2016	X PER STATUTE OTH-ER E.L. EACH ACCIDENT E.L. DISEASE - EA EMPLOYEE E.L. DISEASE - POLICY LIMIT	$ 1,000,000 $ 1,000,000 $ 1,000,000
C	Professional Liab			AEH008212765	10/07/2015	10/07/2016	Per Claim Aggregate	2,000,000 2,000,000

DESCRIPTION OF OPERATIONS / LOCATIONS / VEHICLES (ACORD 101, Additional Remarks Schedule, may be attached if more space is required)

Project: NID4 CDBG Sidewalk Improvements, Phase II
CNA75079XX 0115: CNA74702XX 0115: SCA23500D 1011: G300660A 0608: G15057C 0605: G140428A 1001: CNA79110XX 0914: G20472A 1093

CERTIFICATE HOLDER

CITJO01

City of Joplin
Public Works
602 South Main
Joplin, MO 64801

CANCELLATION

SHOULD ANY OF THE ABOVE DESCRIBED POLICIES BE CANCELLED BEFORE THE EXPIRATION DATE THEREOF, NOTICE WILL BE DELIVERED IN ACCORDANCE WITH THE POLICY PROVISIONS.

AUTHORIZED REPRESENTATIVE

Cristi Becker

© 1988-2014 ACORD CORPORATION. All rights reserved.

The ACORD name and logo are registered marks of ACORD

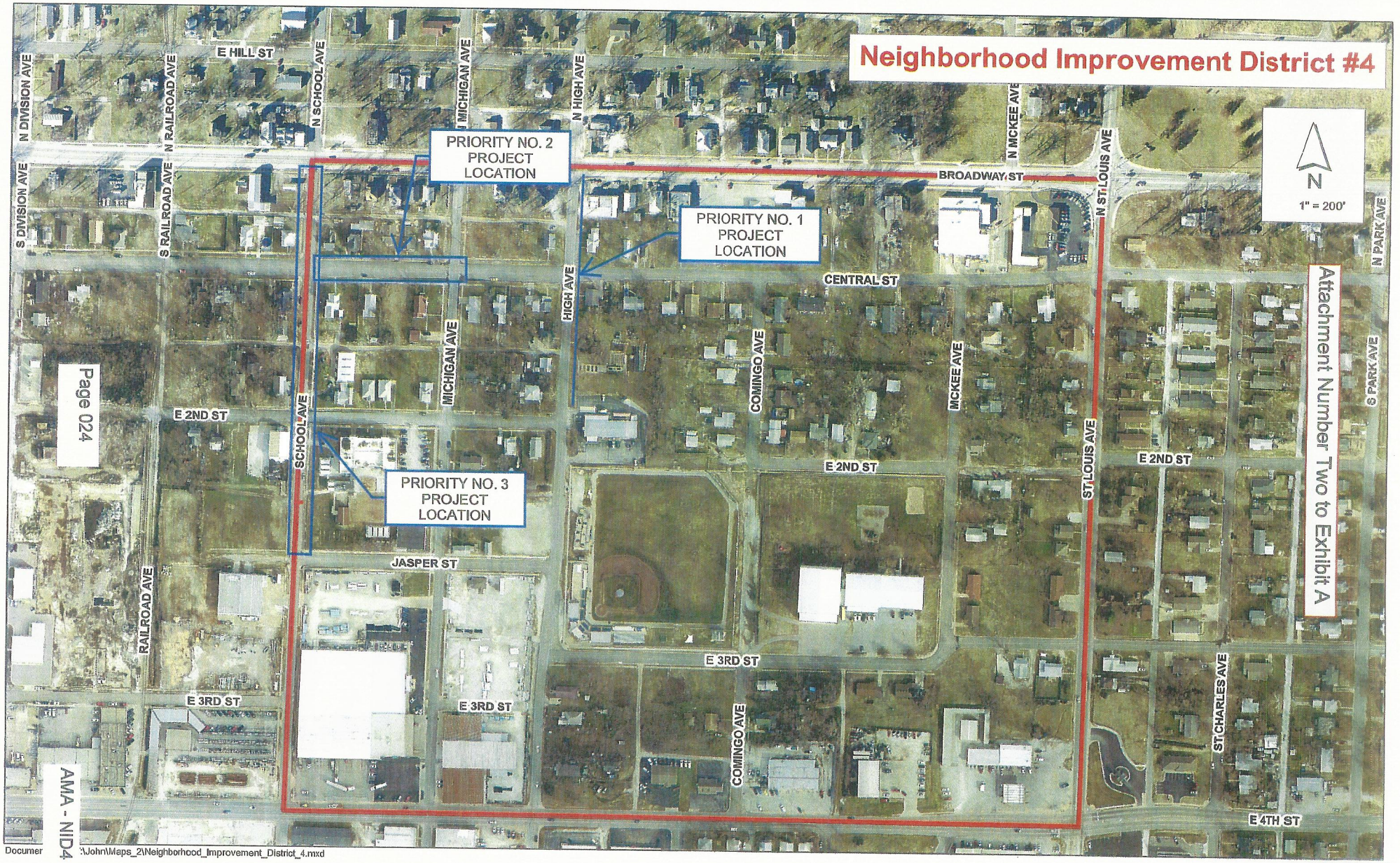
Neighborhood Improvement District #4
PRIORITY NO. 2 PROJECT LOCATION
PRIORITY NO. 1 PROJECT LOCATION
PRIORITY NO. 3 PROJECT LOCATION
N
1" = 200'
E HILL ST
N DIVISION AVE
N RAILROAD AVE
N SCHOOL AVE
N MICHIGAN AVE
N HIGH AVE
N MCKEE AVE
N ST LOUIS AVE
N PARK AVE
S DIVISION AVE
S RAILROAD AVE
BROADWAY ST
CENTRAL ST
HIGH AVE
MICHIGAN AVE
COMINGO AVE
MCKEE AVE
ST LOUIS AVE
S PARK AVE
E 2ND ST
SCHOOL AVE
JASPER ST
RAILROAD AVE
E 3RD ST
ST CHARLES AVE
E 4TH ST
Page 024
Attachment Number Two to Exhibit A
AMA - NID4 - 3
Documer
:\John\Maps_2\Neighborhood_Improvement_District_4.mxd
Date: 10/17/2014

COUNCIL BILL NO. 2017-105 ORDINANCE NO

AN ORDINANCE approving an agreement with Allgeier, Martin & Associates not to exceed Eighty Five Thousand Two Hundred Eighty and no/100 Dollars ($85,280.00) for Design Services Associated with the 2017 Public Infrastructure Improvements in the NID # IV Phase II Project and containing an emergency clause.

BE IT ORDAINED BY THE COUNCIL OF THE CITY OF JOPLIN, as follows:

Section 1. Approval of an agreement with Allgeier, Martin & Associates not to exceed Eighty Five Thousand Two Hundred Eighty and no/100 Dollars ($85,280.00) for Design Services Associated with the 2017 Public Infrastructure Improvements in the NID # IV Phase II Project in the City of Joplin, Jasper County.

Section 2. Upon the final approval and acceptance of the consultant's work under said contract, in substantial conformance with the attached exhibits, in writing by the Director of Public Works, and his certification to that effect to the Director of Finance, the contractor shall be paid from the Community Development Block Entitlement Grant.

Section 3. That the Director of Public Works is hereby authorized to enter into an agreement on behalf of the City of Joplin with Allgeir, Martin & Associates.

Section 4. This ordinance is an emergency within the means of Section 2.12 (6) in that said ordinance provides for public improvements and is considered an emergency by the Council and as such shall become effective immediately upon this passage as provided by the Home Rule Charter for the City of Joplin. Specifically, this ordinance approves work to begin immediately in the optimal construction time during the calendar year, and appropriations for this contract have been approved by the 2016-2017 budget.

Passed by the Council of the City of Joplin, Missouri, this _____ day of

_____, 2017 by a _____ vote.

_____

ATTEST: Michael L. Seibert, Mayor

_____

Barbara L. Hogelin, City Clerk

APPROVED AS TO FORM:

_____

Peter C. Edwards, City Attorney

City of **JOPLIN** City Council Agenda Item

Requested Council Meeting Date: February 6, 2017
Council Bill No. 2017-106
Item: Joplin Street Resurfacing 2017

Originating Department: PUBLIC WORKS – ENGINEERING

Attachments:

1) Bid Tabulation
2) Location Map
3) Council Bill No. 2017-106

Department Head: Nicholas A. Heatherly
Parks Department: Paul Bloomberg
Finance Department: Leslie Haase
City Attorney: Peter C. Edwards
City Manager: Samuel L. Anselm

Recommended Action: Approval of an award of a contract with Blevins Asphalt Construction Company Inc. in the amount of $1,788,311.15 for the Joplin Street Resurfacing 2017 project.

Background: City staff have developed a comprehensive pavement plan for resurfacing our busiest streets. These arterial and collector streets make up about 225 lane miles out of the over 800 lane miles in the city but these streets carry a very high percentage of our traffic and have a significant impact on driver satisfaction. The plan establishes a cycle of resurfacing utilizing a concept of "keeping good roads good" and guides our financial commitments in street resurfacing for the next generation based on existing funding. The work represented by this contract consists of approximately 28 lane miles.

The project also includes the resurfacing of 4 basketball courts including two at Schifferdecker Park, one at Parr Hill Park and one at Humphrey Park.

Discussion: City staff advertised this construction project in accordance with city procurement policy. Three firms submitted bids with Blevins Asphalt Construction Company, Inc. being the low bidder. Funding for the street resurfacing comes from the Transportation Sales Tax and funding for the basketball court resurfacing comes from the Parks and Stormwater Sales Tax. The reason for the combining of the work was to obtain lower prices for the basketball courts because of the high volume of work associated with the overall projects. We believe the bids are acceptable due to the price similarities compared to last year's bids despite higher oil prices.

Recommendation: City staff recommends award of contract to Blevins Asphalt Company Inc. in the amount of $1,788,311.15 for the Joplin Street Resurfacing 2017 project be approved on an emergency basis per Section 2.12 (6) of the Joplin City Charter. Blevins Construction has done work for the City of Joplin in the past. This bid is within the engineer's estimate. The funds will come from the 2016 - 2017 budget.
This council bill will amend the budget in the amount of $330,000.00.

BID TABULATION

PROJECT: Joplin Street Resurfacing 2017
DATE OF BID OPENING: January 6, 2017

CONTRACTOR	BID
Combined Bid	
Blevins Asphalt	1,788,311.15
Emery Sapp & Sons	1,899,725.64
APAC	3,293,456.38
Engineering Estimate	2,253,395.10
Streets	
Blevins Asphalt	1,755,319.95
Emery Sapp & Sons	1,867,647.24
APAC	3,252,706.38
Parks & Rec Basketball Courts	
Blevins Asphalt	32,991.20
Emery Sapp & Sons	32,078.40
APAC	40,750.00

Joplin Streets Resurfacing 2017

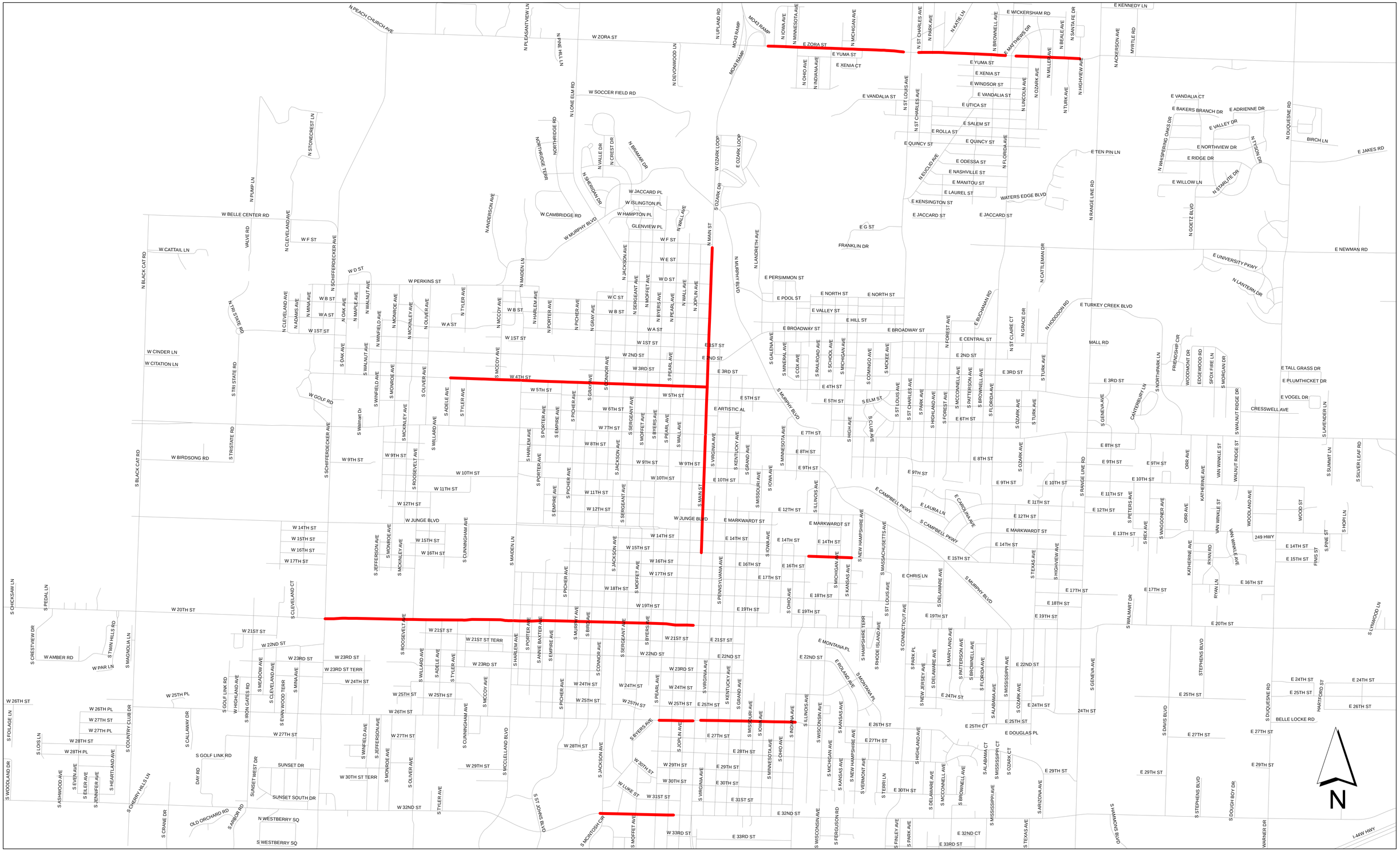
N PEACH CHURCH AVE
W ZORA ST
N PLEASANTVIEW LN
N HILL END LN
N UPLAND RD
MO-43 RAMP
MO-43 RAMP
MO-43 RAMP
E ZORA ST
E YUMA ST
E XENIA CT
N IOWA AVE
N MINNESOTA AVE
N MICHIGAN AVE
N OHIO AVE
N INDIANA AVE
N ST CHARLES AVE
N PARK AVE
N KATIE LN
N BROWNELL AVE
E MATTHEWS DR
E WICKERSHAM RD
N BEALE AVE
N SANTA FE DR
E KENNEDY LN
N ACKERSON AVE
MYRTLE RD
E YUMA ST
E XENIA ST
E WINDSOR ST
E VANDALIA ST
E VANDALIA CT
E UTICA ST
E SALEM ST
E ROLLA ST
E QUINCY ST
N ST LOUIS AVE
N ST CHARLES AVE
N LINCOLN AVE
N OZARK AVE
N MILLER AVE
N TURK AVE
N HIGHVIEW AVE
E BAKERS BRANCH DR
E ADRIENNE DR
E VALLEY DR
E NORTHVIEW DR
E RIDGE DR
N WHISPERING OAKS DR
N TYSON DR
N DUQUESNE RD
BIRCH LN
E JAKES RD
E TEN PIN LN
N EUCLID AVE
N FLORIDA AVE
E ODESSA ST
E NASHVILLE ST
E MANITOU ST
E LAUREL ST
E WILLOW LN
N STARLITE DR
N GOETZ BLVD
WATERS EDGE BLVD
E KENSINGTON ST
E JACCARD ST
E JACCARD ST
N RANGE LINE RD
E G ST
FRANKLIN DR
N CATTLEMAN DR
E NEWMAN RD
E UNIVERSITY PKWY
N LANTERN DR
E TURKEY CREEK BLVD
N NIDDSON RD
MALL RD
FRIENDSHIP CIR
WOODMONT DR
EDGEWOOD RD
SFOX FIRE LN
S MORGAN DR
S NORTHPARK LN
E TALL GRASS DR
E PLUMTHICKET DR
E VOGEL DR
CRESSWELL AVE
S LAWENDER LN
S SUMMIT LN
S SILVER LEAF RD
N SOCCER FIELD RD
N DEVONWOOD LN
N LONE ELM RD
NORTHRIDGE RD
NORTHRIDGE TERR
N VALLE DR
N CREST DR
N BRAMAR DR
N SHERIDAN DR
W JACCARD PL
W ISLINGTON PL
W HAMPTON PL
GLENVIEW PL
W CAMBRIDGE RD
W MURPHY BLVD
N ANDERSON AVE
N WALL AVE
W F ST
W E ST
W D ST
W C ST
W B ST
W A ST
W 1ST ST
W 2ND ST
W 3RD ST
W 4TH ST
W 5TH ST
W 6TH ST
W 7TH ST
W 8TH ST
W 9TH ST
W 10TH ST
W 11TH ST
W 12TH ST
W JUNGE BLVD
W 14TH ST
W 15TH ST
W 16TH ST
W 17TH ST
W 18TH ST
W 19TH ST
W 20TH ST
W 21ST ST
W 21ST ST TERR
W 22ND ST
W 23RD ST
W 23RD ST TERR
W 24TH ST
W 25TH ST
W 25TH PL
W 26TH ST
W 26TH PL
W 27TH ST
W 27TH PL
W 28TH ST
W 28TH PL
W 29TH ST
W 30TH ST TERR
W 32ND ST
W 33RD ST
W PERKINS ST
W BELLE CENTER RD
W CATTAIL LN
W CINDER LN
W CITATION LN
W GOLF RD
W BIRDSONG RD
N MAIDEN LN
N MAIN ST
N JACKSON AVE
N SERGEANT AVE
N MOFFET AVE
N BYERS AVE
N PEARL AVE
N JOPLIN AVE
N MCCOY AVE
N HARLEM AVE
N PORTER AVE
N PICHER AVE
N GRAY AVE
N TYLER AVE
N MARPLE AVE
N WALNUT AVE
N WINFIELD AVE
N MONROE AVE
N MCKINLEY AVE
N OLIVER AVE
N ADAMS AVE
N MINA AVE
N OAK AVE
N CLEVELAND AVE
N SCHIFFERDECKER AVE
N STONECREST LN
N PUMP LN
VALVE RD
N BLACK CAT RD
N TRI STATE RD
N LANDRETH AVE
N MURPHY BLVD
E PERSIMMON ST
E POOL ST
E NORTH ST
E NORTH ST
E VALLEY ST
E HILL ST
E BROADWAY ST
E BROADWAY ST
E CENTRAL ST
E 2ND ST
E 3RD ST
E 4TH ST
E 5TH ST
E 6TH ST
E 7TH ST
E 8TH ST
E 9TH ST
E 10TH ST
E 11TH ST
E 12TH ST
E MARKWARDT ST
E 13TH ST
E 14TH ST
E 15TH ST
E 16TH ST
E 17TH ST
E 18TH ST
E 19TH ST
E 20TH ST
E 21ST ST
E 22ND ST
E 23RD ST
E 24TH ST
E 25TH ST
E 26TH ST
E 27TH ST
E 28TH ST
E 29TH ST
E 30TH ST
E 31ST ST
E 32ND ST
E 33RD ST
E ARTISTIC AL
E DOUGLAS PL
E MONTANA PL
S GALENA AVE
S MINERAL AVE
S COX AVE
S RAILROAD AVE
S SCHOOL AVE
S MICHIGAN AVE
S COMINGO AVE
S MCKEE AVE
S FOREST AVE
S MCCONNELL AVE
S PATTERSON AVE
S BROWNELL AVE
S FLORIDA AVE
S TURK AVE
S OZARK AVE
S ST CLAIRE CT
N GRACE DR
E BUCHANAN RD
S ELM ST
S CLUB AVE
S HIGH AVE
S ST LOUIS AVE
S ST CHARLES AVE
S PARK AVE
S HIGHLAND AVE
S FOREST AVE
S GENEVA AVE
CANTERBURY LN
S MURPHY BLVD
S CONNECTICUT AVE
S PARK PL
S NEW JERSEY AVE
S DELAWARE AVE
S MARYLAND AVE
S PATTERSON AVE
S BROWNELL AVE
S FLORIDA AVE
S MISSISSIPPI AVE
S ALABAMA AVE
S OZARK AVE
S TURK AVE
S GENEVA AVE
S DAVIS BLVD
STEPHENS BLVD
HARTFORD ST
S DUQUESNE RD
BELLE LOCKE RD
24TH ST
E 24TH ST
E 25TH ST
E 26TH ST
E 27TH ST
E 29TH ST
S DELAWARE AVE
S MCCONNELL AVE
S BROWNELL AVE
S MISSISSIPPI AVE
S ALABAMA CT
S MISSISSIPPI CT
S OZARK CT
S ARIZONA AVE
S TEXAS AVE
S HAMMONS BLVD
S STEPHENS BLVD
S DOUGH BOY DR
WARNER DR
I-44W HWY
S MAIN ST
S VIRGINIA AVE
S KENTUCKY AVE
S GRAND AVE
S MISSOURI AVE
S IOWA AVE
S ILLINOIS AVE
S WISCONSIN AVE
S MICHIGAN AVE
S KANSAS AVE
S NEW HAMPSHIRE AVE
S VERMONT AVE
S TERRI LN
S MASSACHUSETTS AVE
S DELAWARE AVE
S PENNSYLVANIA AVE
S RHODE ISLAND AVE
S HAMPSHIRE TERR
S CONNECTICUT AVE
S OHIO AVE
S MICHIGAN AVE
S KANSAS AVE
S TEXAS AVE
S HIGHVIEW AVE
S WALMART DR
S LYNWOOD LN
S DRIVE-IN DR
S MONTANA PL
S ROLAND AVE
S MONTANA PL
S JOPLIN AVE
S STEERS AVE
S JACKSON AVE
S MONTGOMERY CIR
S MOFFET AVE
S FERGUSON RD
S FINLEY AVE
S PARK AVE
S HIGHLAND AVE
S TERRI LN

COUNCIL BILL NO. 2017-106 ORDINANCE NO.

AN ORDINANCE approving a contract with Blevins Asphalt Construction Company Inc. in the amount of One Million Seven Hundred Eighty Eight Thousand Three Hundred Eleven and 15/100 Dollars ($1,788,311.15) for Joplin Street Resurfacing 2017 project in the City of Joplin, Missouri; providing how the cost shall be made and levied; and, amending the Annual Budget of the City of Joplin for the Fiscal year 2016-2017 as adopted by Ordinance 2016-177 on October 17, 2016, and containing an emergency clause;

BE IT ORDAINED BY THE COUNCIL OF THE CITY OF JOPLIN, as follows:

Section 1. That the contract be awarded to Blevins Asphalt Construction Company Inc. in the amount of One Million Seven Hundred Eighty Eight Thousand Three Hundred Eleven and 15/100 Dollars ($1,788,311.15) for Joplin Street Resurfacing 2017 project in the City of Joplin, Missouri.

Section 2. Upon the final approval and acceptance of the contractor's work and is in substantial conformance with said contract in writing by the Director of Public Works, and his certification to that effect to the Director of Finance, the contractor shall be paid from Account Number 140-4520-530-8650 in the Transportation Sales Tax Fund and the Parks and Storm water Sales Tax account number 130-6550-560-8505.

Section 3. That Fiscal year 2016-2017 budgeted appropriations as adopted by Ordinance 2016-177 be amended by increasing appropriations by the total amount of Three Hundred Thirty Thousand Dollars and No Cents ($330,000.00).

Section 4. That the Director of Finance is hereby authorized and directed to make all necessary entries on the City records to show the increase in appropriations.

Section 5. That the Director of Public Works is hereby authorized to enter into a contract on behalf of the City of Joplin with said contractor.

Section 6. This ordinance is an emergency within the meaning of Section 2.12 (6) in that said ordinance provides for public improvements and is considered an emergency by the Council and as such shall become effective immediately upon this passage as provided by the Home Rule Charter for the City of Joplin. Specifically, this ordinance approves construction to begin immediately in the optimal construction time during the calendar year, and appropriations for this contract have been approved by the 2016-2017 budget.

Passed by the Council of the City of Joplin, Missouri, this _____ day of

_____, 2017, by a _____ vote

_____
Michael L. Seibert, Mayor

ATTEST:

_____
Barbara L. Hogelin, City Clerk

APPROVED AS TO FORM:

_____
Peter C. Edwards, City Attorney

City of **JOPLIN** City Council Agenda Item

Requested Council Meeting Date: February 6, 2017
Council Bill No. 2017-107

Item: Construction Contract for Main Street Improvements from 15th to 32nd Street
Originating Department: Public Works

Attachments: 1) Bid tab
2) Location Map
3) Council Bill No. 2017-107

Department Head: Troy Bolander	Date:
Department Head: Nicholas A. Heatherly	Date:
Finance Department: Leslie Haase	Date:
City Attorney: Peter Edward	Date:
City Manager: Sam Anselm	Date:

Recommended Action: Approval of a construction contract with Branco Enterprises Inc. for $7,471,595.40 for the Main Street Improvements from 15th Street to 32nd Street funded through CDBG-DR.

Background: In July, 2015 City Council approved the Capital Plan for the expenditure of CDBG-DR funds which included this project. In September of 2015 the City of Joplin approved with JET Associates for the design, bidding and construction management for the Main Street Improvements from 15th Street to 32nd Street. The improvements will also include street surface and improvements and sidewalk improvements.

Discussion: City staff followed the City of Joplin procurement policy. Bids were opened on November 24, 2017 with 5 firms bidding. Branco Enterprises Inc. provided the lowest bid which was below the engineer's estimate. The contractor will start after contracts signed and weather permits.

Recommendation: City staff recommends approval of the construction contract to with Branco Enterprises Inc. for 7,471,595.40 for the Main Street Improvements from 15th Street to 32nd Street funded through CDBG-DR be approved on an emergency basis per Section 2.12 (6) of the Joplin City Charter.

BID TABULATION

PROJECT: Main Street Improvements 15th Street to 32nd Street
DATE OF BID OPENING: January 24, 2017

CONTRACTOR	BID
Branco Enterprise	$7,471,595.40
Emery Sapp & Sons	$8,020,204.01
Crossland Heavy	$10,394,000.00
Jess Asbell Excavation	$8,913,602.31
D & E Plumbing	$7,540,440.10
Engineering Estimate	$8,312,848.00

COUNCIL BILL NO. 2017- 107 ORDINANCE NO.

AN ORDINANCE approving the City of Joplin to enter into a contract with Branco Enterprises Inc. in the amount of $7,471,595.40 (Seven Million Four Hundred Seventy One Thousand Five Hundred Ninety Five and 40/100 Dollars) for the Main Street Improvements from 15th to 32nd Street Project and authorizing the Director of Public Works to execute said Agreement; and containing an emergency clause.

BE IT ORDAINED BY THE COUNCIL OF THE CITY OF JOPLIN, as follows:

Section 1. That the City enter into a contract with Branco Enterprises Inc. in the amount of $7,471,595.40 (Seven Million Four Hundred Seventy One Thousand Five Hundred Ninety Five and 40/100 Dollars) for the Main Street Improvements from 15th to 32nd Street Project.

Section 2. Upon the final approval and acceptance of the contractor's work in substantial conformance with said contract in writing by the Director of Public Works, and his certification to that effect to the director of Finance, said contractors shall be paid the sum due there under from Community Development Block Grant Disaster Recovery Grant Fund.

Section 3. This ordinance is an emergency within the means of Section 2.12 (6) in that said ordinance provides for public improvements and is considered an emergency by the Council and as such shall become effective immediately upon this passage as provided by the Home Rule Charter for the City of Joplin. Specifically, this ordinance approves work to begin immediately in the optimal construction time during the calendar year, and appropriations for this contract have been approved by the 2016-2017 budget.

Section 4. Project will be paid from the Community Development Block Grant Disaster Recovery Grant Fund.

Passed by the Council of the City of Joplin, Missouri, this _____ day of

_____, 2017, by a _____ vote.

_____

ATTEST: Michael L. Siebert, Mayor

_____

Barbara L. Hogelin, City Clerk

APPROVED AS TO FORM:

_____

Peter C. Edwards, City Attorney

Main St 15th to 32nd

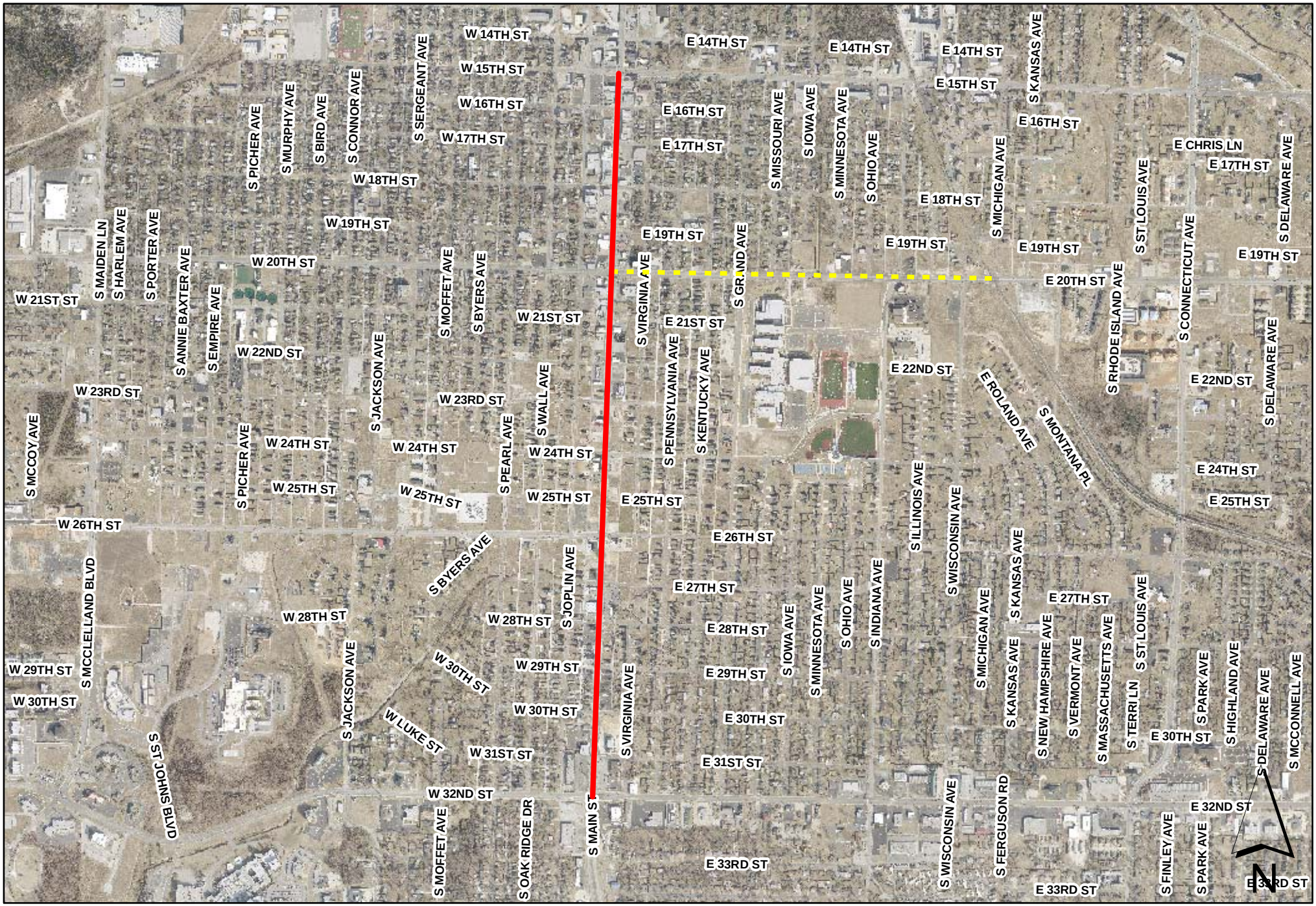

City of **JOPLIN** City Council Agenda Item

Requested Council Meeting Date: February 6, 2017
Council Bill No. 2017-108

Item: Agreement for Professional Services and Work Authorization AMA-I&I RP-001 with Allgeier, Martin & Associates Inc., for Professional Engineering Consulting Services for the I & I Reduction Program.

Originating Department: Public Works – Engineering

Attachments: 1) Agreement with Consultant
2) Work Authorization
3) Council Bill No. 2017-108

Department Head: Nicholas A. Heatherly
Finance Department: Leslie Haase
City Attorney: Peter C. Edwards
City Manager: Samuel L. Anselm

Recommended Action: Approval of Agreement for Professional Services and Work Authorization AMA-I&I RP-001 with Allgeier, Martin & Associates Inc. in the not to exceed amount of $526,542.00 for Professional Engineering Consulting Services for the I & I Reduction Program.

Background: The City's Operating Permits for the Turkey Creek and Shoal Creek wastewater treatment plants require that the City locate and eliminate sources of inflow and infiltration into the collection system. This requirement is driven by the need to eliminate bypass flows (overflows into streams prior to treatment) at both treatment plants, which is a violation of both state and federal law. Since 2012, the City of Joplin has been engaged in various activities focused on eliminating bypass flows. In October of 2016, the City published a Request for Qualifications (RFQ), in accordance with the City's procurement policy, for a consultant to develop a targeted program aimed at eliminating unpermitted discharges within the City's wastewater collection and treatment system. Of the three consulting teams that responded, the team of Allgeier, Martin & Associates (AMA), Burns & McDonnell, and TREKK Design Group was selected to provide professional engineering services for this task.

Discussion: The RFQ was based on the City's 10-year Bypass Elimination Plan, which was part of the City's Peak Flow Voluntary Compliance Agreement with MDNR. From this single RFQ, there exists the potential for multiple Work Authorizations with AMA until the end of the Bypass Elimination Plan in 2022. The first Work Authorization directs AMA to perform a City-wide flow monitoring study within the sanitary sewer collection system. This study will establish a baseline of dry- and wet-weather flows within numerous major basins, as well within two "pilot areas" in which smoke testing has been done. Further Work Authorizations will be needed to continue the comprehensive study of the most affordable and effective solutions toward removing I & I from within the collection system, as envisioned by the RFQ.

Recommendation: City staff recommends that Council approve a contract and the first Work Authorization with AMA, and that approval of Work Authorization AMA-I&I RP-001 with Allgeier Martin & Associates Inc., in the not to exceed amount of $526,542.00 for Professional Engineering Consulting Services for the I & I Reduction Program project, be approved on an emergency basis per Section 2.12 (6) of the Joplin City Charter.

COUNCIL BILL NO. 2017-108 ORDINANCE NO.

AN ORDINANCE approving a Work Authorization for Allgeier Martin & Associates Inc. in the not to exceed amount of Five hundred Twenty-six Thousand Five hundred Forty-two and No/100 Dollars ($526,542.00) for Professional Engineering Consulting Services for the I & I Reduction Program and containing an emergency clause.

BE IT ORDAINED BY THE COUNCIL OF THE CITY OF JOPLIN, MISSOURI as follows:

Section 1. Approval of Work Authorization for Allgeier Martin & Associates Inc. in the not to exceed amount of Five hundred Twenty-six Thousand Five hundred Forty-two and No/100 Dollars ($526,542.00) for Professional Engineering Consulting Services for the I & I Reduction Program in the City of Joplin, Jasper and Newton Counties.

Section 2. Upon the final approval and acceptance of the consultant's work under said contract, in substantial conformance with the attached exhibits, in writing by the Director of Public Works, and his certification to that effect to the Director of Finance.

Section 3. That the Director of Public Works is hereby authorized to enter into a Work Authorization on behalf of the City of Joplin with Allgeier, Martin & Associates Inc.

Section 4. This ordinance is an emergency within the means of Section 2.12 (6) in that said ordinance provides for public improvements and is considered an emergency by the Council and as such shall become effective immediately upon this passage as provided by the Home Rule Charter for the City of Joplin. Specifically, this ordinance approves design to begin immediately in the optimal time during the calendar year, and appropriations for this contract have been approved by the 2016-2017 budget.

Passed by the Council of the City of Joplin, Missouri, this _____ day of

_____, 2017 by a _____ vote.

_____

ATTEST: Michael L. Seibert, Mayor

_____

Barbara L. Hogelin, City Clerk

APPROVED AS TO FORM:

_____

Peter C. Edwards, City Attorney

ATTACHMENT NUMBER ONE
EXHIBIT A TO WORK AUTHORIZATION NUMBER AMA-I&I RP-001 TO AGREEMENT FOR PROFESSIONAL ENGINEERING CONSULTING SERVICES
(Between the City of Joplin, Missouri and Allgeier, Martin and Associates, Inc.)

1. SERVICES

Engineer shall provide the City of Joplin (OWNER) with the following services:

1.1 General

1.1.1 ENGINEER shall perform professional planning, design, bidding, and construction phase services as hereinafter stated which include customary civil, structural, and mechanical engineering services.

1.1.2 Coordinate the planning, evaluation and data collection of flow monitoring for the proposed City of Joplin Inflow and Infiltration (I/I) Reduction Program.

1.1.3 In general, the Project consists of the following:

1.1.3.1 Overall project management of the City of Joplin Sanitary Sewer I/I Reduction Program. This Work Authorization will focus on flow monitoring activities within the wastewater collection system.

1.1.3.1.1 The Allgeier Martin (AMA) team working on this project will consist of Burns and McDonnell (BMcD) and TREKK Design Group, LLC (TREKK). BMcD will serve as the assistant Program Manager.

1.1.3.2 System-wide program analysis including review of existing system information and system wide flow monitoring.

1.1.3.3 Assessment of Pilot Area for I/I reduction efforts including pre-construction flow monitoring within the area and pre-construction data analysis.

2.1 Project Management and Administration: Manage and administer scope and allocate resources to complete the project within schedule and budget limitations.

2.1.1 Kickoff Meeting: Participate in a kickoff meeting with the ENGINEER's team and the City. Discussions shall be held to review and confirm the project/program goals, objectives, and schedule; evaluate basic concerns on objectives and implementation of the Program; confirm responsibilities and the scope of services; develop public communication and documentation guidelines; discuss any known difficulties that may be encountered with regards to property owners; assign project team contacts and communication protocols; review inspection format and forms; review plan and specification document format and content; and discuss construction phase work including access, public notification, construction progress, and approval of finished work.

2.1.2 Progress Meetings: Attend project progress meetings, up to 2, with the OWNER to discuss items such as coordination of work and responsibilities, risk management, schedules, and project progress and implementation.

3.1 System Wide Program Analysis

3.1.1 Collection, Evaluation and Review of Existing Information (Entire System): Prepare and submit a data request to collect reports, GIS data, drawings, permits, facility data, etc. for the development of the wastewater collection system hydraulic model. Data request will include items such as previous reports, GIS data, Pump Station data, as-built drawings, WWTP permits, WWTP data etc. Review of data and information collected will be used to identify data gaps.

3.1.1.1 Produce a list of known data gaps that exist within the City's available system information. Data gaps requiring field investigation will be identified.

3.1.2 Collection System Flow Monitoring: Develop a flow monitoring program consisting of up to Fifty (50) flow meters and eight (8) rain gauges, located to capture tributary and cumulative flows across the OWNER's wastewater collection system. The flow meters and rain gauges will be installed for a period of ninety (90) days in anticipation of collecting adequate data to enable wastewater collection system hydraulic model dry- and wet-weather calibration and verification. If sufficient wet and dry weather events are collected for data analysis and calibration within the first 90-days of monitoring, flow monitoring will cease. However, if sufficient data is not collected during the initial 90-day period, a recommendation may be made to extend flow monitoring for a further 30-day period, or until sufficient data is captured. Four (4) rain gauges will be located in the Shoal Creek Basin and four (4) gauges located in the Turkey Creek Basin under this agreement. Up to ten (10) flow meters shall be installed and monitored by BMcD in the Shoal Creek Basin under a separate, existing agreement, therefore, up to forty (40) flow meters will be part of this agreement scope of work.

3.1.2.1 Suitability for Accurate Metering: The accuracy of the open channel flow metering will depend on numerous variables and it is imperative that they be controlled as much as possible. For this reason, the reconnaissance inspections will be performed to identify the best sites for metering and to minimize such error-causing factors as changes in pipe alignment and size, interruption of channel flow by side inlets and turbulence caused by uneven channels.

3.1.2.2 Safety: It is equally important that the proposed sites conform to typical industry standard requirements for safe operating conditions. If the site falls outside of these requirements, an alternate site that is suitable based on safety requirements will be selected upon further consultation with AMA and the OWNER.

3.1.2.3 A site assessment form for the flow location and the rainfall monitoring locations shall be completed. Up to fifty (50) electronic depth/velocity flow meters (ISCO 2150) shall be provided. Eight (8) tipping-bucket rainfall recorders within, or within close proximity to, the Study Area during the same time frame shall also be provided.

3.1.2.4 Flow Monitoring (90-day period): The flow monitor shall be maintained on a weekly basis. Weekly maintenance shall include the upload and interrogation of all flow data, meter calibration (as needed), weekly velocity profiling, and other diagnostic checks. Field data will be collected and reviewed weekly and meter maintenance coordinated as required to minimize down time and data gaps. Malfunction of metering equipment can occur because of debris in the sewers, damage from storm events, and water level conditions. All monitors shall be removed at the conclusion of the monitoring period.

3.1.2.5 Zinc and Lead samples will be taken while site meter checks are completed prior to commencement of the flow monitoring period.

3.1.2.6 Upon completion of the base period, the meters will be removed unless it is recommended and approved by the OWNER to keep them in place. Justification for extended metering will be due to insufficient rainfall, or dry days, during the monitoring period. Compensation for additional flow metering service and calibration shall be at the unit price set forth in the AMA Rate Schedule.

3.1.2. Rainfall Monitoring (90-day period): Eight (8) continuous recording, electronic rain gauges will be installed, serviced, and maintained within the Study Area during the same 90-day base monitoring period. The gauges will record rainfall to one- hundredths of inch increments. The instruments will be checked and downloaded weekly.

3.1.3 Inflow/Infiltration Strategic Plan: Prepare an I/I Strategic Plan using results from flow monitoring activities. I/I Strategic Plan will provide prioritized sewer basins for future I/I identification and reduction. The prioritized plan will also include a schedule for implementation and I/I investigation technology to be applied.

3.1.3.1 An I/I TM shall be prepared and will document the I/I Strategic Plan.

3.1.4 System Wide Flow and Rainfall Analysis

3.1.4.1 The collected flow meter data from up to 46 of the 50 flow meters will be analyzed to extract the average daily dry weather flow (ADDF), and dry weather diurnal profile for each flow meter basin. The other four meters, which are located in the Shoal Creek Basin, shall be analyzed by BMcD under a separate, existing Agreement.

3.1.4.2 The collected rain gauge data from this scope of work and rain data provided by city rain gauges, will be used to identify independent and unique rainfall events within the flow metering period and the associated sewer system response to those events. Inflow, infiltration, and groundwater influences will be disassembled from the aggregate flow meter data. In order to identify a sufficient pool of rainfall events for wet weather calibration and verification, it is anticipated that up to five (5) rain events will be needed. Adequate rain events for wet weather calibration and verification must be large enough to produce a recognizable, causal response in the wastewater collection network but small enough that the wastewater collection network does not become surcharged.

4.1 Pilot Area Assessment: The intent of the Pilot Area is to establish a means and a method of cost-effectively identifying and measuring I/I. Attachment number three (3) and attachment number four (4) to this exhibit A identify the proposed Pilot Areas for this agreement. Flow meters will be installed during the Spring 2017.

4.1.1 Pilot Area Flow Meter Site Assessment and Installation: Up to three (3) Flow meters shall be located and installed for up to two hundred and ten (90) days in areas identified as “Pilot Areas”. These meters shall be installed and maintained by AMA throughout the study.

4.1.1.1 Suitability for Accurate Metering: The accuracy of the open channel flow metering will depend on numerous variables and it is imperative that they be controlled as much as possible. For this reason, the reconnaissance inspections will be performed to identify the best sites for metering and to minimize such error-causing factors as changes in pipe alignment and size, interruption of channel flow by side inlets and turbulence caused by uneven channels.

4.1.1.2 Safety: It is equally important that the proposed sites conform to typical industry standard requirements for safe operating conditions. If the site falls outside of these requirements, an alternate site that is suitable based on safety requirements will be selected upon further consultation with AMA and the OWNER.

4.1.1.3 A site assessment form for the flow location and the rainfall monitoring locations shall be completed. Three (3) electronic depth/velocity flow meters (ISCO 2150) shall be provided. Two (2) tipping-bucket rainfall recorders within, or within close proximity to, the Study Area during the same time frame shall also be provided.

4.1.1.4 Flow Monitoring (90-day period): The flow monitor shall be maintained via remote telemetry. Maintenance shall include the upload and interrogation of all flow data, meter calibration (as needed), weekly velocity profiling, and other diagnostic checks.

Field data will be collected and reviewed weekly and meter maintenance coordinated as required to minimize down time and data gaps. Malfunction of metering equipment can occur because of debris in the sewers, damage from storm events, and water level conditions. All monitors shall be removed at the conclusion of the monitoring period. Six (6) PreView, Level and Camera sensors shall be provided upstream of the flow meters to determine areas that may have higher influences of infiltration and inflow.

4.1.1.5 Zinc and Lead samples will be taken while the site meter checks are completed prior to commencement of the flow monitoring period.

4.1.1.6 Upon completion of the base period, the meters will be removed unless it is recommended and approved by the OWNER to keep them in place. Justification for extended metering will be due to insufficient rainfall, or dry days, during the monitoring period. Compensation for additional flow metering service and calibration shall be at a unit price to be negotiated between the OWNER and AMA.

4.1.1.7 Rainfall Monitoring (90-day period): Two (2) continuous recording, electronic rain gauges will be installed, serviced, and maintained within the Study Area during the same 90-day base monitoring period. The gauges will record rainfall to one- hundredths of inch increments. The instruments will be checked and downloaded monthly.

4.1.2 Pilot Area Flow and Rainfall Data Analysis Pre Construction: The flow and rainfall data collected in Tasks 3.1 following public and private I/I source repairs will require processing for use. Principal components of sanitary sewer system flows will be evaluated from the flow meter hydrographs in the following general manner.

4.1.2.1 Provide an analysis of flow metering data to estimate average dry weather flow (ADWF) and peak dry weather flow (PDWF).

4.1.2.2 Develop and provide ADWF curves for each metering site. These curves will reflect 15-minute interval variations over time for weekdays and weekends.

4.1.2.3 Prepare a table listing approximate tributary area and population for each site, along with the flow parameters (ADWF, average minimum night-time flow, etc.). Population data shall be provided by the OWNER.

4.1.2.4 Identify rainfall events for evaluation, and determine wet weather flow vs. rain volumes by calculating wet flow volume (total flow, less ADWF, integrated over time during wet weather impact) as a percentage of rain volume. Based on this effort, identify events (and associated locations) that can be used for hydraulic model calibration and verification.

4.1.2.5 Develop scatter graphs of flow depth (in feet) against velocity (in feet per second) for each flow meter.

4.1.2.6 Develop normalized peak flow versus rainfall intensity curves for each flow meter. Separate curves will be developed for infiltration/inflow (I/I) and will include projected peak flow for the design storm event. Indicate if the flow meter site is impacted by upstream flow split and/or downstream conveyance performance.

4.1.2.7 Estimate groundwater induced infiltration and rainfall dependent inflow for each flow meter site.

4.1.2.8 Review results with the OWNER to address any issues as to data validity, missing data, or other problems.

4.1.2.9 A Flow and Rainfall Data Collection and Analysis TM will be prepared and will document flow and rainfall analysis.

1.2 Environmental Clearances and Permitting

The project will be undertaken with the understanding that no Environmental Clearances and/or Land Disturbance and Stormwater permitting will be required for this project and, therefore, the Engineer shall not be responsible for the preparation or production of any such items. Any required Corps of Engineers, Wetlands, or other associated permitting, if determined necessary, may be provided as an additional service.

2. TERMS

2.1 Schedule: The services of the Engineer shall commence as soon as practicable after the execution of this contract, unless otherwise directed in writing, and shall be undertaken and completed in such sequence as to assure their expeditious completion in the light of the purposes of the contract, but in any event, all of the services required hereunder for this Work Authorization scope of work shall be completed no later than December 31, 2017. Work on the tasks contained within this Work Authorization is anticipated to proceed in general accordance with the dates and timelines as indicated in Attachment Six.

2.1.1 Utilizing information supplied by Engineer, the OWNER shall make final engineering and planning decisions in a timely manner to support the Engineer's ability to complete the Services according to the project schedule.

2.2 Distribution of compensation between individual tasks indicated in Section 3 may be altered as necessary to be consistent with services actually rendered, but shall not exceed the total estimated compensation amount unless approved in writing by the OWNER.

3. PAYMENT

3.1 Payment to Engineer shall be at the hourly labor Rates and Non-Labor Rates set forth in the attachment Number Two to Exhibit A: Allgeier, Martin and Associates, "RATE SCHEDULE 2017"; Burns and McDonnell Schedule of Hourly Rates and Expenses; and 2017 Compensation for Professional Engineering Services for TREKK Design Group, LLC (TREKK) with a total compensation ceiling of $526,542, as set forth in Work Authorization Number AMA – I&I RP - 001 to the Agreement for Professional Engineering Consulting Services, Section 5.b. with the estimated maximum fees broken down for respective services in more detail as follows:

Task	Estimated Fee
Project Management (Item 2.1)	$70,447
System Wide Flow Monitoring (Item 3.1)	$412,921
Pilot Area Flow Monitoring (Item 4.1)	$43,174
Total Estimated Maximum Fee	$526,542

ATTACHMENT NUMBER TWO
ALLGEIER, MARTIN and ASSOCIATES, INC.
Consulting Engineers and Surveyors

RATE SCHEDULE
2017

LABOR RATES

Classification	Hourly Billing Rate 01/01/2017 thru 12/31/2017
Principal/Engineer IV	$191
Principal/Engineer III	$175
Project Manager/Engineer II	$155
Project Manager/Engineer I	$140
Designer III/GIS Specialist	$128
Designer/Technician III	$108
Designer/Technician II	$95
Designer/Technician I	$88
Two-Man GPS Survey Crew	$181
One-Man GPS Survey Crew	$140
Three-Man Survey Crew	$201
Two-Man Survey Crew	$155
Registered Land Surveyor II	$166
Registered Land Surveyor I	$145
Survey Party Chief	$88
Survey Crew Member	$72
Right of Way Specialist	$112
Construction Inspector III	$108
Construction Inspector II	$95
Construction Inspector I	$88
Secretary/Assistant	$72
Print Specialist	$72

Note: All pre-approved overtime hours shall be invoiced at 1½ times the hourly billing rate shown above.

NON-LABOR RATES

Item	Rate
Travel	$0.54 per mile (or current IRS rate)
Subsistence	Actual Cost
Lodging	Actual cost
Special Postage or Shipping	Actual cost
Printing	Actual cost
Surveying Materials	Actual cost
Subcontract Specialty Services	Cost + 5%
Flow meter installation	$450/each
Flow Monitoring	$75/meter/day
Rain Gauge Monitoring	$15/gauge/day

CITY		ENGINEER	
CITY OF JOPLIN **602 S. MAIN STREET** **JOPLIN, MO 64801**		Name: **Allgeier, Martin and Associates, Inc.** Address: **7231 E. 24th Street, P.O. Box 2627** **JOPLIN, MO 64804**	
Attention: **Mr. Chris Parker, P.E.**		Attention: **Chris Erisman, P.E.**	
Department: **Public Works, Engineering**		Phone: **417.680.7200**	Fax: **417.680.7300**
Phone: **417.624.0820, x584**	Fax: **417.625.4738**		

AGREEMENT FOR PROFESSIONAL ENGINEERING CONSULTING SERVICES

THIS AGREEMENT, made and entered into this _____ day of _____, 20___, by the parties identified above.

WITNESSETH:

THAT, WHEREAS, the City of Joplin desires to engage the Engineer to render certain technical and professional services in connection with a projects identified on future Work Authorizations to this Agreement;

WHEREAS, the Engineer made certain representations and statements to the City with respect to the provision of such services and the City has accepted said proposal; and

WHEREAS, the Engineer represents Engineer is licensed by the Missouri Board for Architects, Professional Engineers, and Land Surveyors to perform the services designated under this contract, and further represents that all survey services shall be done under the direction of a Land Surveyor licensed by the Missouri Board for Architects, Professional Engineers, and Land Surveyors;

NOW, THEREFORE, for the considerations herein expressed, it is agreed by and between the City and the Engineer as follows:

1. **Services.** The City agrees to engage the services of the Engineer and the Engineer agrees, upon receipt of each duly executed Work Authorization, to perform the services described in the Work Authorization. The services of the Engineer shall commence as soon as practicable after the execution of a Work Authorization, unless otherwise directed in writing, and shall be undertaken and completed in such sequence as to assure their expeditious completion in the light of the purposes of the contract. The Engineer shall be responsible for the professional quality, technical accuracy, timely completion, and the coordination of all designs, drawings, specifications, reports, and other services furnished by the Engineer under this Agreement. Approval by the City and other agencies of drawings, designs, specifications, reports, and incidental engineering work or materials furnished hereunder shall not in any way relieve the Engineer of his responsibility for the technical adequacy of his work except as to matters involving peculiar conditions or uses of the property known to the City or other agencies but not to the Engineer.

2. **Term.** The services of the Engineer shall commence as soon as practicable after the execution of this Agreement, unless otherwise directed in writing, and shall be undertaken and completed in such sequence as to assure their expeditious completion in the light of the purposes of the contract, but in any event, all of the services required hereunder shall be completed as set forth in the schedule for the project which is attached hereto as ***Exhibit A*** of any executed Work Authorization.

3. **Payment.** The City, pursuant to each fully executed Work Authorization, shall pay Engineer the consideration set forth in the Work Authorization, which shall constitute complete payment for the services furnished in connection with the work required to be performed under the Work Authorization.

4. **Exchange of Data**. All information, data, and reports as are in the City's possession and necessary for the carrying out of the work, shall be furnished to the Engineer without charge, and the parties shall cooperate with each other in every way possible in carrying out the scope of services.

5. **Personnel**. The Engineer represents that Engineer will secure at Engineer's own expense, all personnel required to perform the services called for under this contract by Engineer. Such personnel shall not be employees of or have any contractual relationship

with the City except as employees of the Engineer. All of the services required hereunder will be performed by the Engineer or under Engineer's direct supervision and all personnel engaged in the work shall be fully qualified and shall be authorized under state and local law to perform such services. None of the work or services covered by this contract shall be subcontracted without the written approval of the City.

6. **Termination of Contract.**

a. Termination for breach. Failure of the Engineer to fulfill Engineer's obligations under this contract in a timely and satisfactory manner in accordance with the schedule and description of services set forth in Exhibit A shall constitute a breach of the contract, and the City shall thereupon have the right to immediately terminate the contract. The City shall give written notice of termination to the Engineer by one of three different means: Facsimile Transmission ("FAX") if Engineer has a FAX number; U.S. Postal Service Mails; or by hand delivering a copy of the same to the Engineer; or may give notice by any combination of the above methods. The date of termination shall be the date upon which notice of termination is hand delivered to Engineer or given by FAX, or the third day following mailing of the notice of termination, whichever first occurs. In the event of termination for breach, all finished or unfinished documents, data, studies, surveys, drawings, maps, models, photographs, and reports or other materials prepared by the Engineer under this contract shall at the option of the City become its property, and the Engineer shall be entitled to receive just and equitable compensation for any satisfactory work completed on such documents and other materials; provided, that the Engineer shall not be relieved of liability to the City for damages sustained by the City by virtue of any such breach of the contract by the Engineer.

b. Right to terminate in the absence of breach. Either party may terminate this contract for any reason, by serving notice of intent to terminate upon the other party by the means specified in paragraph A of this section. Such notice shall specify the date of termination, but in no event shall either party terminate the contract under this provision upon less than thirty (30) days' notice to the other party; provided, that the parties may mutually agree to waive the thirty (30) day requirement and to shorten the time for notice of termination. In the event of termination in the absence of breach, all finished or unfinished documents, data, studies, surveys, drawings, maps, models, photographs, and reports or other materials prepared by the Engineer under this contract shall at the option of the City become its property, and the Engineer shall be entitled to receive just and equitable compensation for any satisfactory work completed on such documents and other materials.

7. **Conflicts**. No salaried officer or employee of the City, and no member of the City Council shall have a financial interest, direct or indirect, in this contract. A violation of this provision renders the contract void. Any federal regulations, and applicable provisions in Section 105.450 et seq. RSMo. shall not be violated. Engineer covenants that it presently has no interest and shall not acquire any interest, direct or indirect, which would conflict in any manner or degree with the performance of services to be performed under this contract. The Engineer further covenants that in the performance of this contract no person having such interest shall be employed.

8. **Assignment**. The Engineer shall not assign any interest in this contract, and shall not transfer any interest in the same (whether by assignment or novation), without prior written consent of the City thereto. Provided, however, that claims for money due or to become due to the Engineer from the City under this contract may be assigned to a bank, trust company, or other financial institution without such approval. Notice of such assignment or transfer shall be furnished in writing promptly to the City. Any such assignment is expressly subject to all rights and remedies of the City under this agreement, including the right to change or delete activities from the contract or to terminate the same as provided herein, and no such assignment shall require the City to give any notice to any such assignee of any actions which the City may take under this agreement, though City will attempt to so notify any such assignee.

9. **Confidentiality of Documents**. Any reports, data, design or similar information given to or prepared or assembled by the Engineer under this contract which the City requests to be kept as confidential shall not be made available to any individual or organization by the Engineer without prior written approval of the City.

10. **Discrimination.** The Engineer agrees in the performance of this contract not to discriminate on the ground or because of race, creed, color, national origin or ancestry, sex, religion, handicap, age, or political opinion or affiliation, against any employee of Engineer or applicant for employment and shall include a similar provision in all subcontracts let or awarded hereunder.

11. **Occupational License**: The Engineer shall obtain and maintain an occupational license with the City of Joplin, Missouri, if required by city code and any required state or federal license. The cost for this occupational license shall be borne by the Engineer. No contract will be executed by the City until this occupational license has been obtained and that the Engineer is current on any City taxes is verified.

12. **Compliance with Laws**. Engineer agrees to comply with all applicable federal, state and local laws or rules and regulations applicable to the provision of services and products hereunder. Engineer affirmatively states that payment of all local, state, and federal taxes and assessments owed by Engineer is current.

13. **Affidavit for Contracts Over $5,000.00**. That pursuant to Missouri Revised Statute Sections 285.525 through 285.550, if this contract exceeds the amount of $5,000.00 and Engineer is associated with a business entity, Engineer shall provide an acceptable notarized affidavit stating that the associated business entity is enrolled in and participates in a federal work authorization program with respect to the employees working in connection with the contracted services, and that said business entity does not knowingly employ any person who is an unauthorized alien in connection with the contracted services. Additionally, Engineer must provide documentation for said business entity evidencing current enrollment in a federal work authorization program.

14. **Nonresident/Foreign Contractors**. The Engineer shall procure and maintain during the life of this contract:

a. If the Engineer is a foreign corporation, a certificate of authority to transact business in the State of Missouri from the Secretary of State, unless exempt pursuant to the provisions of Section 351.572 RSMo.

b. A certificate from the Missouri Director of Revenue evidencing compliance with the transient employer financial assurance law, unless exempt pursuant to the provisions of Section 285.230 RSMo.

15. **General Independent Contractor Clause**. This agreement does not create an employee/employer relationship between the parties. It is the parties' intention that the Engineer will be an independent contractor and not the City's employee for all purposes, including, but not limited to, the application of the Fair Labor Standards Act minimum wage and overtime payments, Federal Insurance Contribution Act, the Social Security Act, the Federal Unemployment Tax Act, the provisions of the Internal Revenue Code, Missouri revenue and taxation laws, Missouri workers' compensation and unemployment insurance laws. The Engineer will retain sole and absolute discretion in the judgment of the manner and means of carrying out the Engineer's activities and responsibilities hereunder. The Engineer agrees that it is a separate and independent enterprise from the public employer, that it has a full opportunity to find other business, that it has made its own investment in its business, and that it will utilize a high level of skill necessary to perform the work. This agreement shall not be construed as creating any joint employment relationship between the Engineer and the City, and the City will not be liable for any obligation incurred by the Engineer, including but not limited to unpaid minimum wages and/or overtime premiums.

16. **City Benefits**. The Engineer shall not be entitled to any of the benefits established for the employees of the City nor be covered by the Worker's Compensation Program of the City.

17. **Liability and Indemnity**. The parties mutually agree to the following:

a. The Engineer shall defend, indemnify, and hold the City harmless from and against all damages, losses, liabilities, expenses, and costs with respect to all claims, including, but not limited to, claims for personal injuries, wrongful death, and damages to property, which may be asserted against the City by any person or entity as the result of Engineer's (or any of Engineer's subcontractors) negligent acts, errors, or omissions in the course of the performance of this contract, provided that the Engineer is not obligated to indemnify or hold harmless the City from the City's own negligence or wrong doing.

b. The Engineer shall indemnify and hold the City harmless from all wages or overtime compensation due its employees in rendering services pursuant to this agreement, including payment of reasonable attorneys' fees and costs in the defense of any claim made under the Fair Labor Standards Act or any other federal or state law.

c. In no event shall the City be liable to the Engineer for special, indirect, or consequential damages, except those caused by the City's gross negligence or willful or wanton misconduct arising out of or in any way connected with a breach of this contract. The maximum liability of the City shall be limited to the amount of money to be paid or received by the City under this contract.

18. **Ownership of Documents.** All files and information will be submitted before or upon final approval and acceptance of the contract documents. All documents, including original drawings, calculations, computer runs, field notes, drawings, estimates, specifications, written design criteria and written reports are and remain the property of the Engineer until such time as this Agreement is, for any reason, terminated, at which time they become the property of the City. The Engineer shall furnish to the City, one set of reproducible record Mylars of drawings, AutoCAD files and copies of estimates, specifications, written reports, and written design criteria, in consideration of which the City will use them fully in connection with the project and will not sell them.

19. **Notices**. All notices required or permitted hereinunder and required to be in writing may be given by FAX or by first class mail addressed to City and Engineer at the addresses shown above. The date of delivery of any notice given by mail shall be the date falling on the third day after the day of its mailing. The date of delivery of notice by FAX transmission shall be deemed to be the date transmission occurs, except where the transmission is not completed by 5:00 p.m. on a regular business day at the terminal of the receiving party, in which case the date of delivery shall be deemed to fall on the next regular business day for the receiving party.

20. **Jurisdiction**. This agreement and every question arising hereunder shall be construed or determined according to the laws of the State of Missouri. Should any part of this agreement be litigated, venue shall be proper only in the Circuit Court of Jasper County, Missouri.

21. **Entire Agreement**. This agreement contains the entire agreement of the parties. No modification, amendment, or waiver of any of the provisions of this agreement shall be effective unless in writing specifically referring hereto, and signed by both parties.

IN WITNESS WHEREOF, the parties hereto have set their hands and seals on the day and year herein stated.

REVIEWED FOR APPROVAL

_____
Chris Parker, City Sanitary Sewer Engineer

CERTIFICATE OF DIRECTOR OF FINANCE

I certify that the expenditure contemplated by this document is within the purpose of the appropriation to which it is to be charged and that there is an unencumbered balance of appropriated and available funds to pay therefore.

_____
Leslie Haase, Director of Finance

APPROVED AS TO FORM

_____
Peter Edwards, City Attorney

Engineer:

_____

By: _____

Printed Name: _____

Title: _____

Date: _____

CITY OF JOPLIN, MISSOURI

By: _____
Nicholas A. Heatherly, P.E.
Public Works Director

Date: _____

ATTACHMENT NUMBER ONE
EXHIBIT A TO WORK AUTHORIZATION NUMBER AMA-I&I RP-001 TO AGREEMENT FOR PROFESSIONAL ENGINEERING CONSULTING SERVICES
(Between the City of Joplin, Missouri and Allgeier, Martin and Associates, Inc.)

1. SERVICES

Engineer shall provide the City of Joplin (OWNER) with the following services:

1.1 General

1.1.1 ENGINEER shall perform professional planning, design, bidding, and construction phase services as hereinafter stated which include customary civil, structural, and mechanical engineering services.

1.1.2 Coordinate the planning, evaluation and data collection of flow monitoring for the proposed City of Joplin Inflow and Infiltration (I/I) Reduction Program.

1.1.3 In general, the Project consists of the following:

1.1.3.1 Overall project management of the City of Joplin Sanitary Sewer I/I Reduction Program. This Work Authorization will focus on flow monitoring activities within the wastewater collection system.

1.1.3.1.1 The Allgeier Martin (AMA) team working on this project will consist of Burns and McDonnell (BMcD) and TREKK Design Group, LLC (TREKK). BMcD will serve as the assistant Program Manager.

1.1.3.2 System-wide program analysis including review of existing system information, system wide flow monitoring,

1.1.3.3 Assessment of Pilot Area for I/I reduction efforts including pre-construction flow monitoring within the area, pre-construction data analysis, post-construction flow monitoring and post-construction flow reduction analysis.

2.1 Project Management and Administration: Manage and administer scope and allocate resources to complete the project within schedule and budget limitations.

2.1.1 Kickoff Meeting: Participate in a kickoff meeting with the ENGINEER's team and the City. Discussions shall be held to review and confirm the project/program goals, objectives, and schedule; evaluate basic concerns on objectives and implementation of the Program; confirm responsibilities and the scope of services; develop public communication and documentation guidelines; discuss any known difficulties that may be encountered with regards to property owners; assign project team contacts and communication protocols; review inspection format and forms; review plan and specification document format and content; and discuss construction phase work including access, public notification, construction progress, and approval of finished work.

2.1.2 Progress Meetings: Attend project progress meetings, up to 2, with the OWNER to discuss items such as coordination of work and responsibilities, risk management, schedules, and project progress and implementation.

3.1 System Wide Program Analysis

3.1.1 Collection, Evaluation and Review of Existing Information (Entire System): Prepare and submit a data request to collect reports, GIS data, drawings, permits, facility data, etc. for the development of the wastewater collection system hydraulic model. Data request will include items such as previous reports, GIS data, Pump Station data, as-built drawings,

WWTP permits, WWTP data etc. Review of data and information collected will be used to identify data gaps.

3.1.1.1 Produce a list of data gaps which are required for development of a functional wastewater hydraulic model. Data gaps requiring field investigation will be identified.

3.1.2 Collection System Flow Monitoring: Develop a flow monitoring program consisting of up to forty-two (42) flow meters and eight (8) rain gauges, located to capture tributary and cumulative flows across the OWNER's wastewater collection system. The flow meters and rain gauges will be installed for a period of ninety (90) days in anticipation of collecting adequate data to enable wastewater collection system hydraulic model dry- and wet-weather calibration and verification. If sufficient wet and dry weather events are collected for data analysis and calibration within the first 90-days of monitoring, flow monitoring will cease. However, if sufficient data is not collected during the initial 90-day period, a recommendation may be made to extend flow monitoring for a further 30-day period, or until sufficient data is captured. Four (4) rain gauges will be located in the Shoal Creek Basin and four (4) meters located in the Turkey Creek Basin under this agreement. Up to ten (10) flow meters shall be installed and monitored by BMcD in the Shoal Creek Basin under a separate, existing agreement, therefore, thirty-two (32) flow meters will be part of this agreement scope of work.

3.1.2.1 Suitability for Accurate Metering: The accuracy of the open channel flow metering will depend on numerous variables and it is imperative that they be controlled as much as possible. For this reason, the reconnaissance inspections will be performed to identify the best sites for metering and to minimize such error-causing factors as changes in pipe alignment and size, interruption of channel flow by side inlets and turbulence caused by uneven channels.

3.1.2.2 Safety: It is equally important that the proposed sites conform to typical industry standard requirements for safe operating conditions. If the site falls outside of these requirements, an alternate site that is suitable based on safety requirements will be selected upon further consultation with AMA and the OWNER.

3.1.2.3 A site assessment form for the flow location and the rainfall monitoring locations shall be completed. Thirty-two electronic depth/velocity flow meters (ISCO 2150) shall be provided. Four (4) tipping-bucket rainfall recorders within, or within close proximity to, the Study Area during the same time frame shall also be provided.

3.1.2.4 Flow Monitoring (90-day period): The flow monitor shall be maintained on a weekly basis. Weekly maintenance shall include the upload and interrogation of all flow data, meter calibration (as needed), weekly velocity profiling, and other diagnostic checks. Field data will be collected and reviewed weekly and meter maintenance coordinated as required to minimize down time and data gaps. Malfunction of metering equipment can occur because of debris in the sewers, damage from storm events, and water level conditions. All monitors shall be removed at the conclusion of the monitoring period.

3.1.2.5 Zinc and Lead samples will be taken while the meters are interrogated prior to commencement of the flow monitoring period.

3.1.2.6 Upon completion of the base period, the meters will be removed unless it is recommended and approved by the OWNER to keep them in place. Justification for extended metering will be due to insufficient rainfall, or dry days, during the monitoring period. Compensation for additional flow metering service and calibration shall be at a unit price to be negotiated between the OWNER and AMA.

3.1.2.7 Rainfall Monitoring (90-day period): Eight (8) continuous recording, electronic rain gauges will be installed, serviced, and maintained within the Study Area during the same 90-day base monitoring period. The gauges will record rainfall to one- hundredths of inch increments. The instruments will be checked and downloaded weekly.

3.1.4 System Wide Flow and Rainfall Analysis

3.1.4.1 The collected flow meter data from 38 of the 42 flow meters will be analyzed to extract the average daily dry weather flow (ADDF), and dry weather diurnal profile for each flow meter basin. The other four meters, which are located in the Shoal Creek Basin, shall be analyzed by BMcD under a separate, existing Agreement. The OWNER will provide the City's top ten industrial, commercial, and institutional (ICI) flows, respectively, which will be applied to the hydraulic model individually. The model will generate peak dry weather flow and base sanitary flow values but will not be identified separately in the flow analysis.

3.1.4.2 The collected rain gauge data from this scope of work and rain data provided by city rain gauges, will be used to identify independent and unique rainfall events within the flow metering period and the associated sewer system response to those events. Inflow, infiltration, and groundwater influences will be disassembled from the aggregate flow meter data for inclusion in the hydraulic model. In order to identify a sufficient pool of rainfall events for wet weather calibration and verification, it is anticipated that up to five (5) rain events will be needed. Adequate rain events for wet weather calibration and verification must be large enough to produce a recognizable, causal response in the wastewater collection network but small enough that the wastewater collection network does not become surcharged.

4.1 Pilot Area Assessment: The intent of the Pilot Area is to establish a means and a method of cost-effectively identifying, removing and measuring I/I. Attachment number three (3) and attachment number four (4) to this exhibit A identify the proposed Pilot Areas for this agreement. Flow meters will be installed during the Spring 2017. Flow monitoring will continue through the Fall 2017 to quantify the I/I reduction.

4.1.1 Pilot Area Flow Meter Site Assessment and Installation: Up to three (3) Flow meters shall be located and installed for up to two hundred and ten (210) days in areas identified as "Pilot Areas". These meters shall be installed and maintained by AMA throughout the study and construction period.

4.1.1.1 Suitability for Accurate Metering: The accuracy of the open channel flow metering will depend on numerous variables and it is imperative that they be controlled as much as possible. For this reason, the reconnaissance inspections will be performed to identify the best sites for metering and to minimize such error-causing factors as changes in pipe alignment and size, interruption of channel flow by side inlets and turbulence caused by uneven channels.

4.1.1.2 Safety: It is equally important that the proposed sites conform to typical industry standard requirements for safe operating conditions. If the site falls outside of these requirements, an alternate site that is suitable based on safety requirements will be selected upon further consultation with AMA and the OWNER.

4.1.1.3 A site assessment form for the flow location and the rainfall monitoring locations shall be completed. Three (3) electronic depth/velocity flow meters (ISCO 2150) shall be provided. Two (2) tipping-bucket rainfall recorders within, or within close proximity to, the Study Area during the same time frame shall also be provided.

4.1.1.4 Flow Monitoring (210-day period): The flow monitor shall be maintained via remote telemetry. Maintenance shall include the upload and interrogation of all flow data, meter calibration (as needed), weekly velocity profiling, and other diagnostic checks. Field data will be collected and reviewed weekly and meter maintenance coordinated as required to minimize down time and data gaps. Malfunction of metering equipment can occur because of debris in the sewers, damage from storm events, and water level conditions. All monitors shall be removed at the conclusion of the monitoring period. Eight (8) PreView, Level and Camera sensors shall be provided upstream of the flow meters to determine areas that may have higher influences of infiltration and inflow.

4.1.1.5 Zinc and Lead samples will be taken while the meters are interrogated prior to commencement of the flow monitoring period.

4.1.1.6 Upon completion of the base period, the meters will be removed unless it is recommended and approved by the OWNER to keep them in place. Justification for extended metering will be due to insufficient rainfall, or dry days, during the monitoring period. Compensation for additional flow metering service and calibration shall be at a unit price to be negotiated between the OWNER and AMA.

4.1.1.7 Rainfall Monitoring (210-day period): Two (2) continuous recording, electronic rain gauges will be installed, serviced, and maintained within the Study Area during the same 210-day base monitoring period. The gauges will record rainfall to one- hundredths of inch increments. The instruments will be checked and downloaded monthly.

4.1.2 Pilot Area Flow and Rainfall Data Analysis Pre Construction: The flow and rainfall data collected in Tasks 3.1 following public and private I/I source repairs will require processing for use. Principal components of sanitary sewer system flows will be deconstructed from the flow meter hydrographs in the following general manner.

4.1.2.1 Provide an analysis of flow metering data to estimate average dry weather flow (ADWF) and peak dry weather flow (PDWF).

4.1.2.2 Develop and provide ADWF curves for each metering site. These curves will reflect 15-minute interval variations over time for weekdays and weekends.

4.1.2.3 Prepare a table listing approximate tributary area and population for each site, along with the flow parameters (ADWF, average minimum night-time flow, etc.). Population data shall be provided by the OWNER.

4.1.2.4 Identify rainfall events for evaluation, and determine wet weather flow vs. rain volumes by calculating wet flow volume (total flow, less ADWF, integrated over time during wet weather impact) as a percentage of rain volume. Based on this effort, identify events (and associated locations) that can be used for hydraulic model calibration and verification.

4.1.2.5 Develop scatter graphs of flow depth (in feet) against velocity (in feet per second) for each flow meter.

4.1.2.6 Develop normalized peak flow versus rainfall intensity curves for each flow meter. Separate curves will be developed for infiltration/inflow (I/I) and will include projected peak flow for the design storm event. Indicate if the flow meter site is impacted by upstream flow split and/or downstream conveyance performance.

4.1.2.7 Estimate groundwater induced infiltration and rainfall dependent inflow for each flow meter site.

4.1.2.8 Adjust flow analysis based on hydraulic model calibration results.

4.1.2.9 Review results with the OWNER to address any issues as to data validity, missing data, or other problems.

4.1.2.10 A Flow and Rainfall Data Collection and Analysis TM will be prepared and will document flow and rainfall analysis.

4.1**.3** Pilot Area Post Construction Flow and I/I Reduction Analysis: Following public and private I/I construction activities, flow monitoring analysis will be completed in accordance with Task 4.1.2 as noted above. An I/I Removal TM including a comparison of both the pre- and post- construction flow and rainfall data analysis will be provided. One hard copy and one electronic format copy will be provided.

1.2 Environmental Clearances and Permitting

The project will be undertaken with the understanding that no Environmental Clearances and/or Land Disturbance and Stormwater permitting will be required for this project and, therefore, the Engineer shall not be responsible for the preparation or production of any such items. Any required Corps of Engineers, Wetlands, or other associated permitting, if determined necessary, may be provided as an additional service.

2. TERMS

2.1 Schedule: The services of the Engineer shall commence as soon as practicable after the execution of this contract, unless otherwise directed in writing, and shall be undertaken and completed in such sequence as to assure their expeditious completion in the light of the purposes of the contract, but in any event, all of the services required hereunder for this Work Authorization scope of work shall be completed no later than December 31, 2017. Work on the tasks contained within this Work Authorization is anticipated to proceed in general accordance with the dates and timelines as indicated in Attachment Six.

2.1.1 Utilizing information supplied by Engineer, the OWNER shall make final engineering and planning decisions in a timely manner to support the Engineer's ability to complete the Services according to the project schedule.

2.2 Distribution of compensation between individual tasks indicated in Section 3 may be altered as necessary to be consistent with services actually rendered, but shall not exceed the total estimated compensation amount unless approved in writing by the OWNER.

3. PAYMENT

3.1 Payment to Engineer shall be at the hourly labor Rates and Non-Labor Rates set forth in the attachment Number Two to Exhibit A: Allgeier, Martin and Associates, "RATE SCHEDULE 2017"; Burns and McDonnell Schedule of Hourly Rates and Expenses; and 2017 Compensation for Professional Engineering Services for TREKK Design Group, LLC (TREKK) with a total compensation ceiling of $493,728, as set forth in Work Authorization Number AMA – I&I RP - 001 to the Agreement for Professional Engineering Consulting Services, Section 5.b. with the estimated maximum fees broken down for respective services in more detail as follows:

Task	Estimated Fee
Project Management (Item 2.1)	$70,447
System Wide Flow Monitoring (Item 3.1)	$341,200
Pilot Area Flow Monitoring (Item 4.1)	$82,081
Total Estimated Maximum Fee	$493,728

ATTACHMENT NUMBER TWO

ALLGEIER, MARTIN and ASSOCIATES, INC.

Consulting Engineers and Surveyors

RATE SCHEDULE
2017

LABOR RATES

Classification	Hourly Billing Rate 01/01/2017 thru 12/31/2017
Principal/Engineer IV	$191
Principal/Engineer III	$175
Project Manager/Engineer II	$155
Project Manager/Engineer I	$140
Designer III/GIS Specialist	$128
Designer/Technician III	$108
Designer/Technician II	$95
Designer/Technician I	$88
Two-Man GPS Survey Crew	$181
One-Man GPS Survey Crew	$140
Three-Man Survey Crew	$201
Two-Man Survey Crew	$155
Registered Land Surveyor II	$166
Registered Land Surveyor I	$145
Survey Party Chief	$88
Survey Crew Member	$72
Right of Way Specialist	$112
Construction Inspector III	$108
Construction Inspector II	$95
Construction Inspector I	$88
Secretary/Assistant	$72
Print Specialist	$72

Note: All pre-approved overtime hours shall be invoiced at 1½ times the hourly billing rate shown above.

NON-LABOR RATES

Item	Rate
Travel	$0.54 per mile (or current IRS rate)
Subsistence	Actual Cost
Lodging	Actual cost
Special Postage or Shipping	Actual cost
Printing	Actual cost
Surveying Materials	Actual cost
Subcontract Specialty Services	Cost + 5%

CITY		ENGINEER	
CITY OF JOPLIN **602 S. MAIN STREET** **JOPLIN, MO 64801**		Name: **Allgeier, Martin and Associates, Inc.** Address: **7231 E. 24th Street, P.O. Box 2627** **JOPLIN, MO 64804**	
Attention: **Mr. Chris Parker, P.E.**		Attention: **Chris Erisman, P.E.**	
Department: **Public Works, Engineering**		Phone: **417.680.7200**	Fax: **417.680.7300**
Phone: **417.624.0820, x584**	Fax: **417.625.4738**		

WORK AUTHORIZATION NUMBER AMA - I&I RP - 001
TO AGREEMENT FOR PROFESSIONAL ENGINEERING CONSULTING SERVICES

City and Engineer agree to amend their Agreement for Professional Engineering Consulting Services, dated _____, to include a scope of work and fees for engineering services, by adding the following terms to their Agreement.

1. **Services**. The City agrees to engage the services of the Engineer and the Engineer agrees to perform the services hereinafter set forth in connection with projects described in ***Exhibit A*** to this Work Authorization, which is included herein.

2. **Addition to Services**. The City may add to the Engineer services or delete therefrom activities of a similar nature to those set forth in ***Exhibit A***, provided that the total cost of such services does not exceed the total cost allowance as specified in Paragraph 5 hereof. The Engineer shall undertake such changed activities only upon the direction of the City. All such directives and changes shall be in written form and prepared and approved by the City and shall be accepted and countersigned by the Engineer.

3. **Term**. The services of the Engineer shall commence as soon as practicable after the execution of this Work Authorization, unless otherwise directed in writing, and shall be undertaken and completed in such sequence as to assure their expeditious completion in the light of the purposes of the Work Authorization, but in any event, all of the services required hereunder shall be completed as set forth in the schedule for the project which is attached hereto as ***Exhibit A***.

4. **Costs not to Exceed**. The City of Joplin is limited by law with respect to the amount of money it can pay. Therefore, the City has established a fixed sum for this contract, which cannot be exceeded unless this contract is amended. The Engineer providing services hereunder shall be required to keep track of the amount of hours billable under this contract at all times; and any work in excess of the fixed sum shall not be eligible for payment. The Engineer shall notify the City if Engineer anticipates that the contract amount may be exceeded, in order to determine whether or not the City is prepared to increase the total compensation. The Engineer shall establish a billing system showing the amount of money remaining on the contract, which shall be shown in each monthly billing.

5. **Payment**.

a. **Conditioned upon acceptable performance**. The City agrees to pay the Engineer in accordance with the terms set forth in ***Exhibit A***, which shall constitute complete compensation for all services to be rendered under this contract; provided, that where payments are to be made periodically to Engineer for services rendered under this contract, the City expressly reserves the right to disapprove in whole or in part a request for payment where the services rendered during the period for which payment is claimed are not performed in a timely and satisfactory manner in accordance with the schedule and description of services set forth in ***Exhibit A***.

b. **Total compensation not to exceed**. It is expressly understood that in no event will the total compensation and reimbursement to be paid to the Engineer under the terms of this work Authorization Number AMA – I&I RP - 001 exceed the sum of Four Hundred Fifty Thousand, Eight Hundred Fifty-Three Dollars ($450,853).

6. **Insurance**. Without limiting any of the other obligations or liabilities of the Engineer, the Engineer shall secure and maintain at its own cost and expense, throughout the duration of this Contract and until the work is completed and accepted by the City of Joplin, insurance of such types and in such amounts specified herein to protect it and the interests of the City of Joplin against all hazards or risks of loss as hereunder specified or which may arise out of the performance of the Contract Documents. The form and

limits of such insurance, together with the underwriter thereof in each case, are subject to approval by the City of Joplin. Regardless of such approval, it shall be the responsibility of the Engineer to maintain adequate insurance coverage at all times during the term of the Contract. Failure of the Engineer to maintain coverage shall not relieve it of any contractual responsibility or obligation or liability under this Work Authorization.

The certificates of insurance, including evidence of the required endorsements hereunder or the policies, shall be filed with the City at the time that this contract is signed by the Engineer. All insurance policies shall provide thirty (30) days written notice to be given by the insurance company in question prior to modification or cancellation of such insurance. Such notices shall be mailed, certified mail, return receipt requested, to:

City of Joplin - Public Works, 602 S. Main, Joplin, MO 64801; and

Such policies shall name the City as an additional insured with limits of liability not less than the sovereign immunity limits for Missouri public entities calculated by the Missouri Department of Insurance as of January 1 each calendar year and published annually in the Missouri Register pursuant to Section 537.610, RSMo.
(See, http://insurance.mo.gov/industry/sovimmunity.php).

As of January 1, 2017, the minimum coverage for the insurance referred to herein shall be as set out below:

a. Workers' Compensation….Statutory coverage per RSMo 287.010 et seq.
Employer's Liability……. $1,000,000.00

b. Commercial General Liability Insurance, including coverage for Contractual Liability and Independent Contractors Liability. Such coverage shall apply to bodily injury and property damage on an "Occurrence Form Basis" with limits of at least Two Million Seven Hundred Sixty Two Thousand Seven Hundred Eighty Nine and no/100 Dollars ($2,762,789.00) for all claims arising out of a single accident or occurrence and at least Four Hundred Fourteen Thousand Four Hundred Eighteen and no/100 Dollars ($414,418.00) with respect to injuries and/or death of any one person in a single occurrence and an amount not less than at least $1,000,000 for all claims to property arising out of a single occurrence and at least $100,000 to any one owner with respect to damages to property. Engineer agrees that the proceeds of such insurance policy shall first be used to pay any award, damages, costs, and/or attorneys' fees incurred by or assessed against City, its employees, officers and agents, before payment of any award, damages, costs or attorneys fees of Engineer, its employees, officers or agents. Engineer agrees to cause its insurer to name City as an additional insured on such insurance policy, including the City as an additional insured for coverage under its products-completed operations hazard, and said policy shall be primary and noncontributory.

c. Automobile Liability Insurance covering bodily injury and property damage for owned, non-owned and hired vehicles, with limits of at least Two Million Seven Hundred Sixty Two Thousand Seven Hundred Eighty Nine and no/100 Dollars ($2,762,789.00) for all claims arising out of a single accident or occurrence and at least Four Hundred Fourteen Thousand Four Hundred Eighteen and no/100 Dollars ($414,418.00) with respect to injuries and/or death of any one person in a single accident or occurrence.

d. Errors and Omissions Insurance. The Engineer shall maintain a professional liability insurance policy in the amount of $1,000,000.00. This policy shall remain in full force and effect for a period of one year after completion and acceptance by the City of the construction of the project.

e. Subcontracts. In case any or all of this work is sublet, the Engineer shall require the subcontractor to procure and maintain all insurance required in subparagraphs (A), (B) and (C) hereof and in like amounts. Engineer shall require any and all subcontractors with whom it enters into a contract to perform work on this project to protect the City of Joplin through insurance against applicable hazards or risks and shall, upon request of the City, provide evidence of such insurance.

f. Notice. The Engineer and/or subcontractor shall furnish the City prior to beginning the work satisfactory proof of carriage of all the insurance required by this contract, with the provision that policies shall not be canceled, modified or non-renewed without thirty (30) days written notice to the City of Joplin.

g. Legislative or Judicial Changes. In the event the scope or extent of the City's tort liability as a governmental entity as described in Section 537.600 through 537.650 RSMo is broadened or increased during the term of this agreement by legislative or judicial action, the City may require Engineer, upon 10 days written notice, to execute a contract addendum to this Work Authorization whereby the Engineer agrees to provide, at a price not exceeding Engineer's actual increased premium cost, additional liability

insurance coverage as the City may require to protect the City from increased tort liability exposure as the result of such legislative or judicial action. Any such additional insurance coverage shall be evidenced by an appropriate certificate of insurance and shall take effect within the time set forth in the addendum.

7. All other terms and conditions of the original Agreement shall remain in effect.

IN WITNESS WHEREOF, the parties hereto have set their hands and seals on the day and year herein stated.

REVIEWED FOR APPROVAL

_____
Name & Title of Staff Project Manager

CERTIFICATE OF DIRECTOR OF FINANCE

I certify that the expenditure contemplated by this document is within the purpose of the appropriation to which it is to be charged and that there is an unencumbered balance of appropriated and available funds to pay therefore.

_____
Leslie Haase, Director of Finance

APPROVED AS TO FORM

_____
Peter Edwards, City Attorney

Engineer: _____

By: _____

Printed Name: _____

Title: _____

Date: _____

CITY OF JOPLIN, MISSOURI

By: _____
Nicholas A. Heatherly, P.E.
Public Works Director

Date: _____

World Wide Technology, Inc.

Sales Quotation

Quote Number: 4335215.1

Customer: City of Joplin, MO

Quote Date: 01/13/2017

Contract: SOM - PVC - ST
C211034001
Exp. Date: 03/31/2017

Submitted By

Hodges, Lauren
P: (314) 682-5069
Lauren.Hodges@wwt.com

Submitted To

Tony Robyn
P: (417) 624-0820 x541
TRobyn@Joplinmo.org

Line	Mfr Part # / Mfr Name	Lead Time	Qty	Cust Price	Ext Price
Desktops - Public Computers - OptiPlex 7440 - 5 YR Pro Support - Quote 1					
1	210-AFLX DELL	Call	37	$1,086.88	$40,214.56
	Description: OptiPlex 7440 AIO XCTO (210-AFLX)				
iMac 27" w/ retina 5k display - Quote 2					
2	MK462LL/A APPLE COMPUTER	Call	2	$1,739.92	$3,479.84
	Description: Apple iMac MK462LL/A All-in-One Computer - Intel Core i5 3.20 GHz - 8 GB DDR3 SDRAM - 1 TB HDD - 27" 5120 x 2880 - Mac OS X 10.11 El Capitan - Desktop - Silver WITH 5K DISPLAY - **NOTE: All Apple products are non-turnable.				
3	MD006LL/A APPLE COMPUTER	Call	2	$122.72	$245.44
	Description: Apple AppleCare Protection Plan - 3 Year - Service - On-site - Maintenance - Parts & Labor - Electronic and Physical Service IMAC IMAC - **NOTE: All Apple products are non-turnable.				
4	S3053LL/A APPLE COMPUTER	Call	2	$61.66	$123.32
	Description: 3YR APPLECARE PARTS AGREEMENT AUTO ENROLL FOR IMAC-SELF SERVICE 3 year parts only - user installed **NOTE: All Apple products are non-turnable.				
OptiPlex 7040s - Quote 3					
5	210-AFGI DELL	Call	35	$1,093.22	$38,262.70
	Description: OptiPlex 7040 Mini Tower XCTO				
6	318-2918 DELL	Call	35	$14.97	$523.95
	Description: Dell AX210 USB Stereo Speaker System				
23'' Monitors - Quote 3					
7	E2316H3 DELL	Call	35	$109.20	$3,822.00
	Description: 23" LCD Widescreen Flat-Panel Monitor				

Line	Mfr Part # Mfr Name	Lead Time	Qty	Cust Price	Ext Price
	Precision 15 3000(3510) - Public - 5YR Pro Support - Quote 4				
8	210-AGMF DELL	Call	5	$1,514.79	$7,573.95
	Description: Dell Mobile Precision Workstation 3510 XCTO				
	Precision 15 3000(3510) Staff-5 Yr ProSupport - Quote 5				
9	210-AGMF DELL	Call	7	$1,675.24	$11,726.68
	Description: Dell Mobile Precision Workstation 3510 XCTO				
	Apple MacBook Pro MF839LL/A 13.3" - Quote 6				
10	MF839LL/A APPLE COMPUTER	Call	2	$1,231.19	$2,462.38
	Description: Apple MacBook Pro MF839LL/A 13.3" LCD 16:10 Notebook - 2560 x 1600 - Retina Display, In-plane Switching (IPS) Technology - Intel Core i5 Dual-core (2 Core) 2.70 GHz - 8 GB LPDDR3 - 128 GB SSD - Mac OS X 10.10 Yosemite - Silver .				
11	S3141LL/A APPLE COMPUTER	Call	2	$177.34	$354.68
	Description: Apple Care Protection Plan - 3 Year Extended Service - Service MB PRO 13 AUTOE*ORD APPLECARE@INGRM				
	OptiPlex 3030 AIO - 5 Yr Pro Support - Quote 7				
12	210-ACEZ DELL	Call	11	$1,129.46	$12,424.06
	Description: OptiPlex 3030 AIO CTO (210-ACEZ)				
13	A7515161 ERGOTRON	Call	11	$143.09	$1,573.99
	Description: Ergotron Neo-Flex Cantilever, UHD - mounting kit				
	Tablets - Admin - iPad Air 2 32 GB. Wifi only. - Quote 8				
14	MNV62LL/A APPLE COMPUTER	Call	7	$382.20	$2,675.40
	Description: Apple iPad Air 2 32 GB Tablet - 9.7" 4:3 Multi-touch Screen - 2048 x 1536 - Retina Display, In-plane Switching (IPS) Technology - Apple A8X Triple-core (3 Core) - iOS 9 - Silver On back order - ETA 1/26 (NON -RETURNABLE)				
15	S4738LL/A APPLE COMPUTER	Call	7	$70.32	$492.24
	Description: AppleCare+ - Extended service agreement - parts and labor - 2 years (from original purchase date of the equipment)				
	Dell Servers - Quote 9				
16	210-AFEV DELL	Call	1	$7,562.86	$7,562.86
	Description: Dell PowerEdge R330				
17	210-AFEV DELL	Call	1	$3,855.53	$3,855.53
	Description: Dell PowerEdge R330				
18	210-AFEV DELL	Call	1	$3,102.63	$3,102.63
	Description: Dell PowerEdge R330				

Line	Mfr Part # Mfr Name	Lead Time	Qty	Cust Price	Ext Price
	Printers/Scanners - Quote 10				
19	C5J91A#BGJ HP INC.	Call	7	$280.36	$1,962.52
	Description: HP LaserJet Pro M402dne Laser Printer - Monochrome - 1200 x 1200 dpi Print - Plain Paper Print - Desktop 38/40PPM LTR A4 256MB USB - Promo pricing ends 12/25				
20	8966B002BA CANON	Call	1	$4,415.58	$4,415.58
	Description: Canon imagePROGRAF iPF785 36" Large-Format Inkjet Printer				
21	A8P79A#BGJ HP INC.	Call	1	$756.94	$756.94
	Description: HP LaserJet Pro M521DN Laser Multifunction Printer - Monochrome - Plain Paper Print - Desktop Valid Until 1/20/2017 while stock is available				
22	B5L26A#BGJ HP INC.	Call	4	$1,178.51	$4,714.04
	Description: HP LaserJet M553x Laser Printer - Color - 1200 x 1200 dpi Print - Plain Paper Print - Desktop LASER 40PPM LTR USB				
23	MFS1V1R B & H FOTO & ELECTRONICS CORP	Call	1	$484.64	$484.64
	Description: Matter and Form 3D Scanner				
	Software - Quote 11				
24	65270768BC01A12 ADOBE SYSTEMS	Call	4	$837.53	$3,350.12
	Description: Creative Cloud for teams - All Apps				
25	79P-05582 MICROSOFT CORPORATION	Call	82	$336.45	$27,588.90
	Description: OfficeProPlus 2016 SNGL MVL				

Totals	
Product Total	$183,748.95
Maintenance Total	$0.00
Customer Total	$183,748.95
Estimated Shipping	$0.00
Estimated Tax	$0.00
Total Price:	**$183,748.95**

This quote is WWT Confidential Information.
Seller provides all products and original manufacturer services to Buyer only in accordance with any applicable original manufacturer terms and conditions within the applicable end user license agreement, terms of service, or similar legal instrument.
Unless expressly stated herein, price quotes are valid for 30 days and are subject to change thereafter.
Unless expressly stated herein, prices do not include, and Buyer is responsible for, any and all taxes, handling, shipping, transportation, duties or other charges or fees relating to the sale and delivery of products.
Products may only be returned in accordance with the original manufacturer's RMA policy.
Items returned after 30 days of receipt may not be returnable due to vendor restrictions.
All delivery dates are approximate and not guaranteed.
Products will be shipped in accordance with FCA WWT's shipping point (Incoterms 2010), unless otherwise stated herein or agreed to by both parties in writing in a contract.
Title and risk of loss will transfer to Buyer at WWT's shipping point.
Payment terms are net 30, unless otherwise agreed to by both parties in writing.
All products and services are provided to Buyer in accordance with Seller's terms of sale at https://www.wwt.com/TermsAndConditions/TermsAndConditions.doc; provided that, if Buyer has a master agreement in place with WWT, the master agreement will apply in lieu thereof.
Within the 30 day quote validity period WWT reserves the right to revise the quote due to exchange rate fluctuations.

Date: 1/12/17

Veronica Jacobson, Project Engineer
U.S. Department of Commerce
Economic Development Administration
Denver, Colorado
1244 Speer Blvd., Suite 431
Denver Co 80204

Re: EDA Award Number: 05-79-05345
Joplin, MO

Subject: **PROCUREMENT OF COMPUTER EQUIPMENT**

Dear Veronica*:*

The following was the procurement process followed for the computer equipment for the library.

Per City procurement policy, computer equipment may be purchased through the State of Missouri's Cooperative Purchase Agreement, currently held by World Wide Technology Inc., as long as items cannot be purchased from a local vendor at a lower price. City Finance has determined there is not a local vendor that can provide this equipment. The City worked with the State of Missouri to review the various World Wide Technology Inc. procurement information items, contracts, and amendments available on the State's website. The City also completed the SAM.gov disbarment check.

In November 2016, specifications were provided to World Wide Technology Inc. and they provided bid estimates for requested equipment with prices good for 30 days. These original quotes were tabulated and submitted to EDA for approval. Unbeknownst to staff, there was a formula error in the original bid quote, attached. Also, during the review and specification verification process for some of the equipment, the quoted prices and some promotional prices expired and we were required to receive new quotes, which are attached.

Please review the information, sign below indicating EDA's acceptance, and email a copy of this letter for our records to our project/grant administrator at *trobyn@joplinmo.org.*

Should you require additional information please contact Tony Robyn at 417-624-0820, x541.

Sincerely,

Tony W. Robyn

Assistant Director Planning/Project Manager

EDA Concurrence: _____

Cindy Edwards **Date**
EDA Project Engineer

City of **JOPLIN** City Council Agenda Item

Requested Council Meeting Date: February 6, 2017
Council Bill No. 2017-356

Item: Purchase Order for the new Joplin Library Computer Equipment
Originating Department: Planning, Development and Neighborhood Services

Attachments: 1) Bid Documents
2) Procurement Process
3) Council Bill No. 2017-356

Department Head: Troy Bolander
Finance Department: Leslie Haase
City Attorney: Peter C. Edwards
City Manager: Samuel L. Anselm

Recommended Action: Approval of a Purchase Order for World Wide Technology, with a not to exceed amount of One Hundred Eighty-Three Thousand, Seven Hundred Forty-Eight Dollars and Ninety-Five Cents. ($183,748.95) for computer equipment for the Economic Development Administration (EDA) grant funded new Joplin Public Library.

Background: In October 2016, the City solicited quotes for computer equipment from the procured cooperative agreement currently held by World Wide Technology. The City has joined other municipalities to utilize this State of Missouri cooperative agreement to purchase computer equipment.

Discussion: On January 17, 2017, the bid quotes from World Wide Technology were reviewed and approved by EDA. The final quoted prices may vary slightly higher or lower when the order is placed, as final pricing is determined daily and at the actual time of order.

Recommendation: Staff recommends approval of the equipment purchase and it be approved on an emergency basis per Section 2.12 (6) in that said ordinance provides for public improvements and is considered an emergency by the Council and as such shall become effective immediately upon this passage as provided by the Home Rule Charter for the City of Joplin in order to maintain the project schedule to meet the EDA required completion date of May 22, 2017.

COUNCIL BILL NO. 2017-356 ORDINANCE NO.

AN ORDINANCE approving a Purchase Order to be issued to World Wide Technology for computers, printers and equipment; and, authorizing the City Manager or his designee to execute said Purchase Order by and on behalf of the City of Joplin; and containing an emergency clause.

WHEREAS, the Economic Development Administration awarded Joplin a $20,000,000 library and infrastructure grant in 2013; and,

WHEREAS, the building and site construction is nearing completion and library equipment and supplies are being purchased prior to the May 22, 2017, construction end date; and,

WHEREAS, World Wide Technology was awarded the low bid on computers, printers and equipment.

NOW, THEREFORE, BE IT ORDAINED BY THE COUNCIL OF THE CITY OF JOPLIN, MISSOURI, as follows:

Section 1. That a Purchase Order be issued to World Wide Technology, hereby approved for One Hundred Eighty-Three Thousand, Seven Hundred Forty-Eight Dollars and Ninety-Five Cents ($183,748.95).

Section 2. That the City Manager, or his designee is hereby authorized and directed to execute said Purchase Order by and on behalf of the City of Joplin, Missouri.

Section 3. This Ordinance is declared by the City Council to be an emergency within this meaning of Section 2.12, subparagraph (6) of the Home Rule Charter of the City of Joplin, Missouri, as it relates to a public improvement, and as such shall become effective immediately upon its passage.

Passed by the Council of the City of Joplin, Missouri, this _____ day of _____, 2017, by a _____ vote.

_____
Michael L. Seibert, Mayor

ATTEST:

_____
Barbara L. Hogelin, City Clerk

APPROVED AS TO FORM:

_____
Peter C. Edwards, City Attorney

Joplin Public Library Shelving Package Bid Tabulation 9-Jan-17

Bidder	Shelving Units	
Color Integrated Interiors Springfield, MO	$253,508.41	Incomplete Bid
Furniture by William Webb Carrolton, TX	No Bid	
Grooms Office Environments Springfield, MO	No Bid	
Library Furniture International Northbrook, IL	$385,588	
Modern Business Interiors Kansas City, MO	$311,185.70	Low Bid Selected
Scott Rice Workspace Solution Broken Arrow, OK	No Bid	

City of **JOPLIN** City Council Agenda Item

Requested Council Meeting Date: February 6, 2017
Council Bill No. 2017-357

Item: Purchase Order for the new Joplin Library Shelving
Originating Department: Planning, Development and Neighborhood Services

Attachments: 1) Bid Tabulation
2) RFP Specifications
3) Council Bill No. 2017-357

Department Head: Troy Bolander
Finance Department: Leslie Haase
City Attorney: Peter C. Edwards
City Manager: Samuel L. Anselm

Recommended Action: Approval of a Purchase Order for Modern Business Interiors, with a not to exceed amount of Three Hundred Eleven Thousand One Hundred Eighty-Five Dollars and Seventy Cents. ($311,185.70) for library shelving for the Economic Development Administration grant funded new Joplin Public Library

Background: In November 2016, the Economic Development Administration (EDA) approved the Request for Bids public posting for Furniture and Shelving. In December 2016, sealed bids were received from six (6) firms and reviewed.

Discussion: The Color Art firm with the lowest bid for shelving was excluded as it was not complete. On January 9, 2017, the next lowest bid from Modern Business Interiors was selected and approved by EDA. The shelving units are custom made and require a 60-day lead time for construction. Move-in is targeted for April 2017 and shelving needs to be in place prior.

Recommendation: Staff recommends approval of the shelving units purchase and it be approved on an emergency basis per Section 2.12 (6) in that said ordinance provides for public improvements and is considered an emergency by the Council and as such shall become effective immediately upon this passage as provided by the Home Rule Charter for the City of Joplin in order to maintain the project schedule to meet the EDA required completion date of May 22, 2017.

Joplin Public Library

SH-1
ITEM CODE

FURNITURE SPECIFICATIONS

JOPLIN PUBLIC LIBRARY

PROJECT NO: 14289000
JOPLIN, MISSOURI
ISSUE DATE: 10/14/2016

FF&E BASIS OF DESIGN
Shelving

Manufacturer listed as basis of design only. Equal alternates can be submitted for review.

ITEM INFORMATION:

Type Mark	Collection	Count	6" Acrylic Signage	Width	Shelving Depth	Height
SH-1	Children's Early Learners	19	Yes	36"	15.75"/15.75"	48"

BOTH SIDES:

Base	15" D Browsing Bin
Row 2	12" D Browsing Bin
Row 3	Face Out Display Shelf

OTHER:

White Mats

Tunnel, See Section 6 - Tunnel

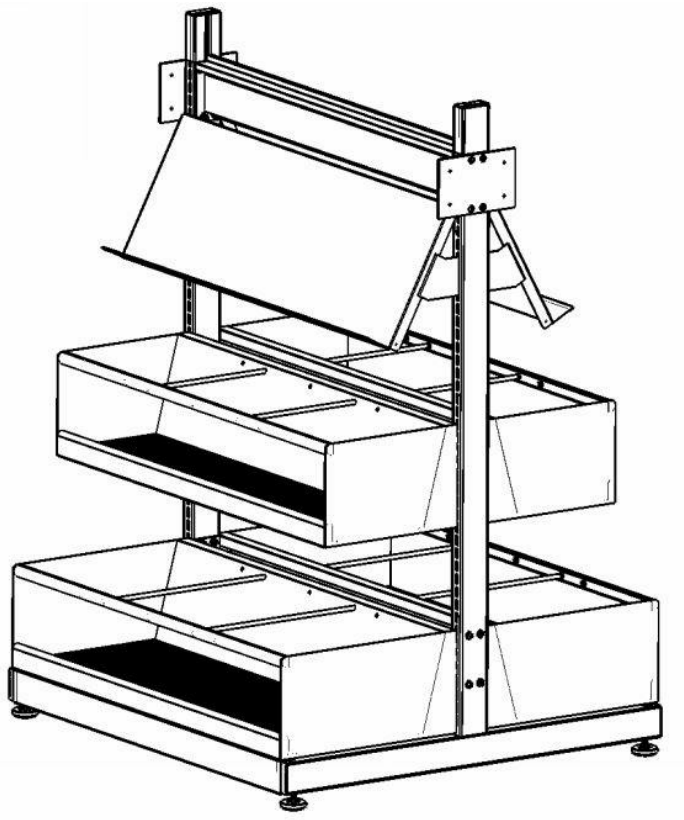

OPN ARCHITECTS

Joplin Public Library

SH-2
ITEM CODE

FURNITURE SPECIFICATIONS

JOPLIN PUBLIC LIBRARY

PROJECT NO: 14289000
JOPLIN, MISSOURI
ISSUE DATE: 10/14/2016

FF&E BASIS OF DESIGN
Shelving

Manufacturer listed as basis of design only. Equal alternates can be submitted for review.

ITEM INFORMATION:

Type Mark	Collection	Count	6" Acrylic Signage	Width	Shelving Depth	Height
SH-2	Children's Early Learners	4	Yes	36"	15.75"/OPEN	48"

SIDE ONE:

Base 15" D Browsing Bin
Row 2 12" D Browsing Bin
Row 3 Face Out Display Shelf

SIDE TWO:

Custom Peg Board Play System

OTHER:

White Mats

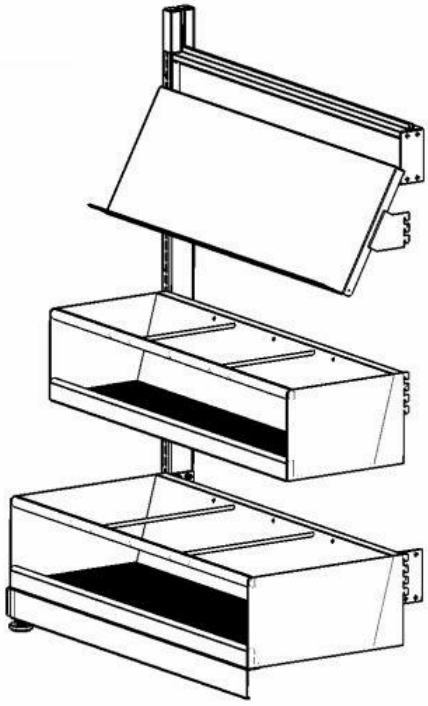

OPN ARCHITECTS

Joplin Public Library

SH-3
ITEM CODE

FURNITURE SPECIFICATIONS

JOPLIN PUBLIC LIBRARY

PROJECT NO: 14289000
JOPLIN, MISSOURI
ISSUE DATE: 10/14/2016

FF&E BASIS OF DESIGN
Shelving

Manufacturer listed as basis of design only. Equal alternates can be submitted for review.

ITEM INFORMATION:

Type Mark	Collection	Count	6" Acrylic Signage	Width	Shelving Depth	Height
SH-3	Children's Audio/DVD	2	Yes	36"	10"/10"	48"

SIDE ONE:

Base	10" D Sloped Display Shelf, 30 Degree
Row 2	10" D Sloped Display Shelf, 10 Degree
Row 3	10" D Flat Shelf with Book Stop
Row 4	10" D Flat Shelf with Book Stop

SIDE TWO:

Rows 1-4	10" D MD Browser Shelf w/ 6 Compartments

OPN ARCHITECTS

Joplin Public Library

SH-4a
ITEM CODE

FURNITURE SPECIFICATIONS

JOPLIN PUBLIC LIBRARY

PROJECT NO: 14289000
JOPLIN, MISSOURI
ISSUE DATE: 10/14/2016

FF&E BASIS OF DESIGN
Shelving

Manufacturer listed as basis of design only. Equal alternates can be submitted for review.

ITEM INFORMATION:

Type Mark	Collection	Count	6" Acrylic Signage	Width	Shelving Depth	Height
SH-4a	Children's Easy Readers	21	Yes	36"	10"/10"	48"

SIDE ONE:

Base	10" D Sloped Display Shelf, 30 Degree
Row 2	10" D Sloped Display Shelf, 10 Degree
Row 3	10" D Flat Shelf with Book Stop

SIDE TWO:

Base	10" D Sloped Display Shelf, 30 Degree
Row 2	10" D Sloped Display Shelf, 10 Degree
Row 3	MD Zig Zag Shelf with Front Lip, 4 Compartments

OPN ARCHITECTS

Joplin Public Library

SH-4b
ITEM CODE

FURNITURE SPECIFICATIONS

JOPLIN PUBLIC LIBRARY

PROJECT NO: 14289000
JOPLIN, MISSOURI
ISSUE DATE: 10/14/2016

FF&E BASIS OF DESIGN
Shelving

Manufacturer listed as basis of design only. Equal alternates can be submitted for review.

ITEM INFORMATION:

Type Mark	Collection	Count	6" Acrylic Signage	Width	Shelving Depth	Height
SH-4b	Children's Juvenile	51	Yes	36"	10"/10"	60"

SIDE ONE:

Base	10" D Sloped Display Shelf, 30 Degree
Row 2	10" D Sloped Display Shelf, 10 Degree
Rows 3,4,5	10" D Flat Shelf with Book Stop

SIDE TWO:

Base	10" D Sloped Display Shelf, 30 Degree
Row 2	10" D Sloped Display Shelf, 10 Degree
Rows 3,4	10" D Flat Shelf with Book Stop
Row 5	MD Zig Zag Shelf with Front Lip, 4 Compartments

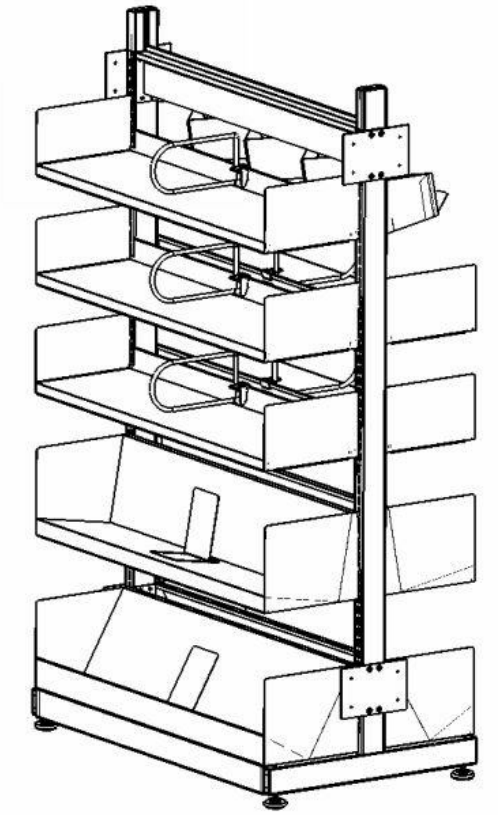

OPN ARCHITECTS

Joplin Public Library

SH-5a
ITEM CODE

FURNITURE SPECIFICATIONS

JOPLIN PUBLIC LIBRARY

PROJECT NO: 14289000
JOPLIN, MISSOURI
ISSUE DATE: 10/14/2016

FF&E BASIS OF DESIGN
Shelving

Manufacturer listed as basis of design only. Equal alternates can be submitted for review.

ITEM INFORMATION:

Type Mark	Collection	Count	6" Acrylic Signage	Width	Shelving Depth	Height
SH-5a	18 Degree Curved	7	No	36"	12"/12"	48"

BOTH SIDES:

Rows 1,2,3 12" D Flat Shelf with Book Stop

OTHER:

Canopy Tops - See Section 8
Puppet Theatre - See Section 6, Puppet Theatre
Storage - See Section 6, Storage

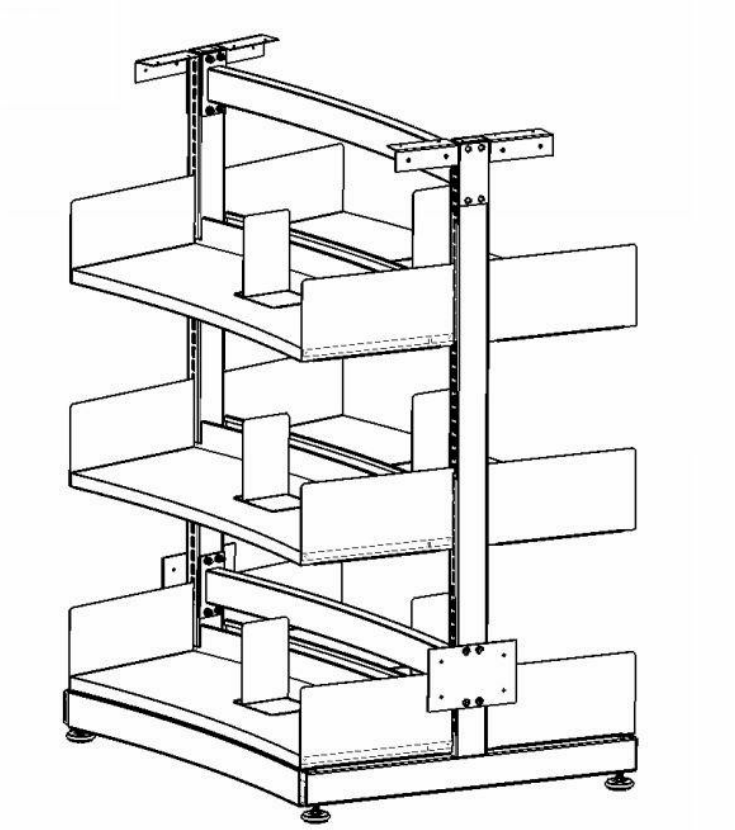

OPN ARCHITECTS

Joplin Public Library

SH-5b
ITEM CODE

FURNITURE SPECIFICATIONS

JOPLIN PUBLIC LIBRARY

PROJECT NO: 14289000
JOPLIN, MISSOURI
ISSUE DATE: 10/14/2016

FF&E BASIS OF DESIGN
Shelving

Manufacturer listed as basis of design only. Equal alternates can be submitted for review.

ITEM INFORMATION:

Type Mark	Collection	Count	6" Acrylic Signage	Width	Shelving Depth	Height
SH-5b	26 Degree Curved	15	No	36"	10"/10"	48"

BOTH SIDES:

Rows 1,2,3 10" D Flat Shelf with Book Stop

OTHER:

Canopy Tops - See Section 8

OPN ARCHITECTS

Joplin Public Library

SH-6
ITEM CODE

FURNITURE SPECIFICATIONS

JOPLIN PUBLIC LIBRARY

PROJECT NO: 14289000
JOPLIN, MISSOURI
ISSUE DATE: 10/14/2016

FF&E BASIS OF DESIGN
Shelving

Manufacturer listed as basis of design only. Equal alternates can be submitted for review.

ITEM INFORMATION:

Type Mark	Collection	Count	6" Acrylic Signage	Width	Shelving Depth	Height
SH-6	Children's DVD	7	Yes	36"	10"D/10"D	48"

BOTH SIDES:

Rows 1-4 10" D MD Browser Shelf with 6 Compartments

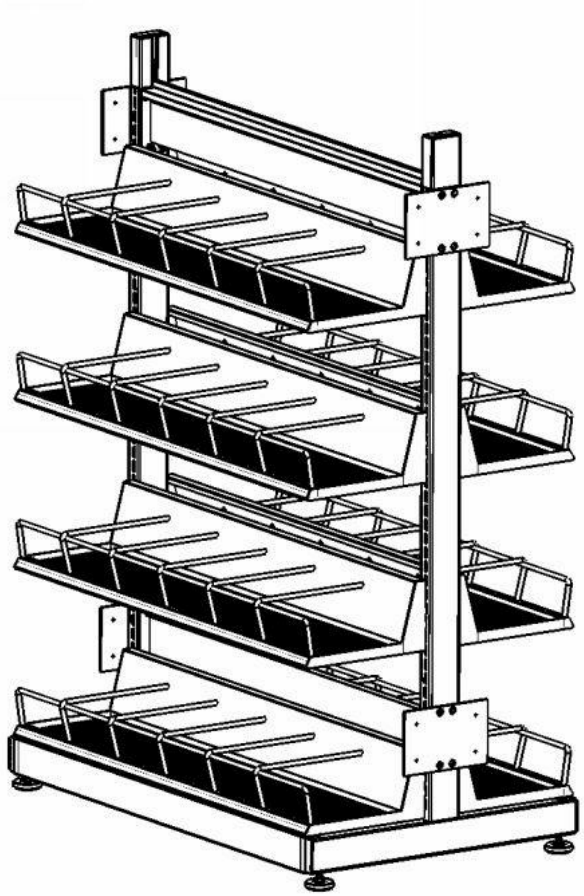

OPN ARCHITECTS

Joplin Public Library

SH-7a
ITEM CODE

FURNITURE SPECIFICATIONS

JOPLIN PUBLIC LIBRARY

PROJECT NO: 14289000
JOPLIN, MISSOURI
ISSUE DATE: 10/14/2016

FF&E BASIS OF DESIGN
Shelving

Manufacturer listed as basis of design only. Equal alternates can be submitted for review.

ITEM INFORMATION:

Type Mark	Collection	Count	6" Acrylic Signage	Width	Shelving Depth	Height
SH-7a	Adult CDs - Mobile	6	No	36"	10"D/10"D	48"

BOTH SIDES:

Rows 1-4 10" D MD Browser Shelf with 6 Compartments

Casters Yes

OTHER:

Canopy Tops, See Section 8

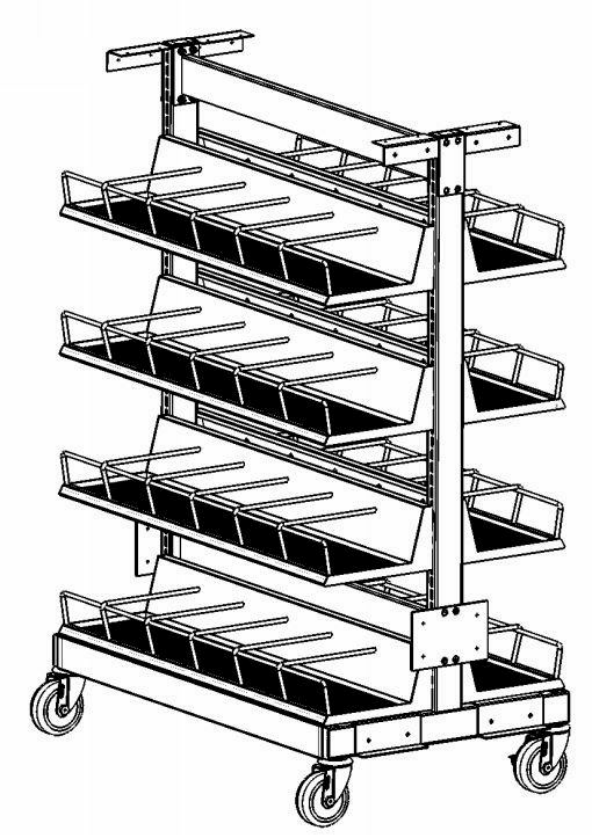

OPN ARCHITECTS

Joplin Public Library

SH-7b
ITEM CODE

FURNITURE SPECIFICATIONS

JOPLIN PUBLIC LIBRARY

PROJECT NO: 14289000
JOPLIN, MISSOURI
ISSUE DATE: 10/14/2016

FF&E BASIS OF DESIGN
Shelving

Manufacturer listed as basis of design only. Equal alternates can be submitted for review.

ITEM INFORMATION:

Type Mark	Collection	Count	6" Acrylic Signage	Width	Shelving Depth	Height
SH-7b	Book Sales - Mobile	6	No	36"	10"D/10"D	48"

BOTH SIDES:

Base	10" D Sloped Display Shelf, 30 Degree
Row 2	10" D Sloped Display Shelf, 10 Degree
Row 3	10" D Flat Shelf with Book Stop

Casters Yes

OTHER:

Canopy Tops, See Section 8

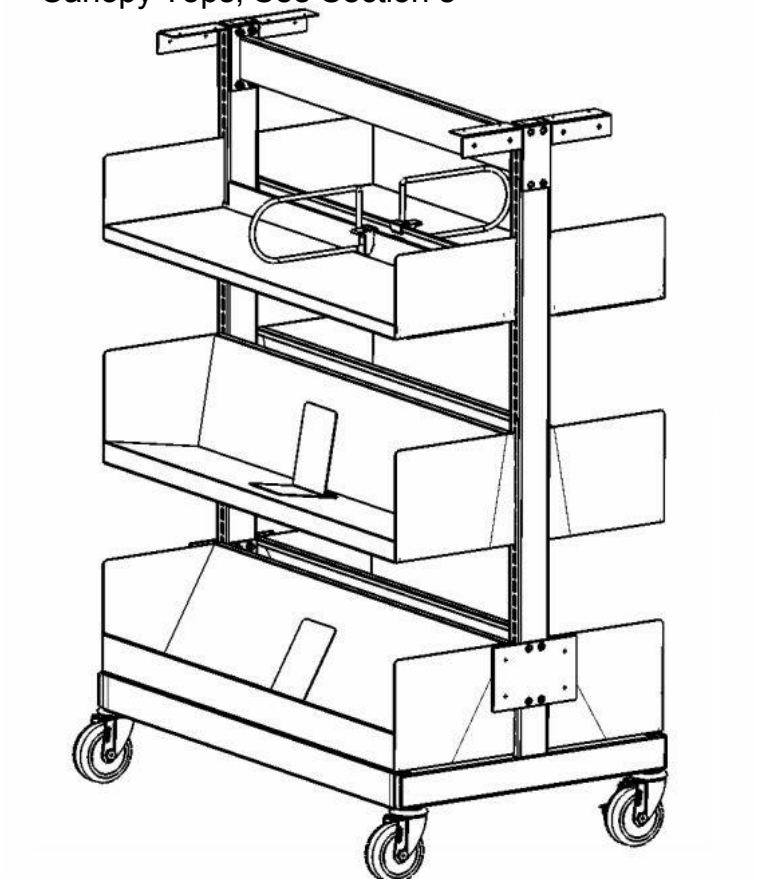

OPN ARCHITECTS

Joplin Public Library

SH-8
ITEM CODE

FURNITURE SPECIFICATIONS

JOPLIN PUBLIC LIBRARY

PROJECT NO: 14289000
JOPLIN, MISSOURI
ISSUE DATE: 10/14/2016

FF&E BASIS OF DESIGN
Shelving

Manufacturer listed as basis of design only. Equal alternates can be submitted for review.

ITEM INFORMATION:

Type Mark	Collection	Count	6" Acrylic Signage	Width	Shelving Depth	Height
SH-8	New Books - Mobile	12	No	36"	10"D/10"D	48"

SIDE ONE:

Base 10" D Sloped Display Shelf, 30 Degree
Row 2 10" D Sloped Display Shelf, 10 Degree
Row 3 10" D Flat Shelf with Book Stop

Casters Yes

SIDE TWO:

Base 10" D Sloped Display Shelf, 30 Degree
Row 2 10" D Sloped Display Shelf, 10 Degree
Row 3 MD Zig Zag Shelf with Lip, 4 Compartments

Casters Yes

OTHER:

Canopy Tops, See Section 8

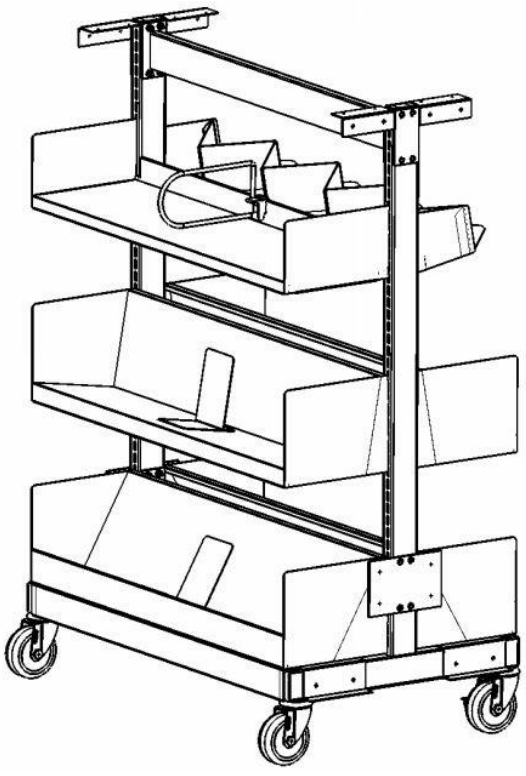

OPN ARCHITECTS

Joplin Public Library

SH-9
ITEM CODE

FURNITURE SPECIFICATIONS

JOPLIN PUBLIC LIBRARY

PROJECT NO: 14289000
JOPLIN, MISSOURI
ISSUE DATE: 10/14/2016

FF&E BASIS OF DESIGN
Shelving

Manufacturer listed as basis of design only. Equal alternates can be submitted for review.

ITEM INFORMATION:

Type Mark	Collection	Count	6" Acrylic Signage	Width	Shelving Depth	Height
SH-9	Local History, Large Print, Adult Fiction	106	Yes	36"	10"D/10"D	66"

BOTH SIDES:

Base	10" D Sloped Display Shelf, 30 Degree
Row 2	10" D Sloped Display Shelf, 10 Degree
Rows 3,4,5	10" D Flat Shelf with Book Stop

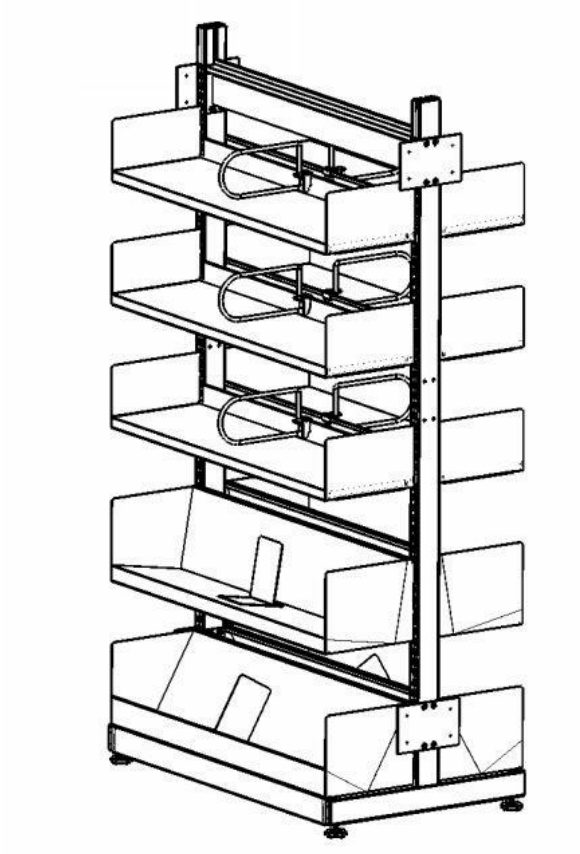

OPN ARCHITECTS

Joplin Public Library

SH-10
ITEM CODE

FURNITURE SPECIFICATIONS

JOPLIN PUBLIC LIBRARY

PROJECT NO: 14289000
JOPLIN, MISSOURI
ISSUE DATE: 10/14/2016

FF&E BASIS OF DESIGN
Shelving

Manufacturer listed as basis of design only. Equal alternates can be submitted for review.

ITEM INFORMATION:

Type Mark	Collection	Count	6" Acrylic Signage	Width	Shelving Depth	Height
SH-10	Local History	4	Yes	36"	10"D/10"D	66"

BOTH SIDES:

Base	10" D Sloped Display Shelf, 30 Degree
Row 2	10" D Sloped Display Shelf, 10 Degree
Rows 3,4	10" D Flat Shelf with Book Stop
Row 5	Face Out Display Shelf

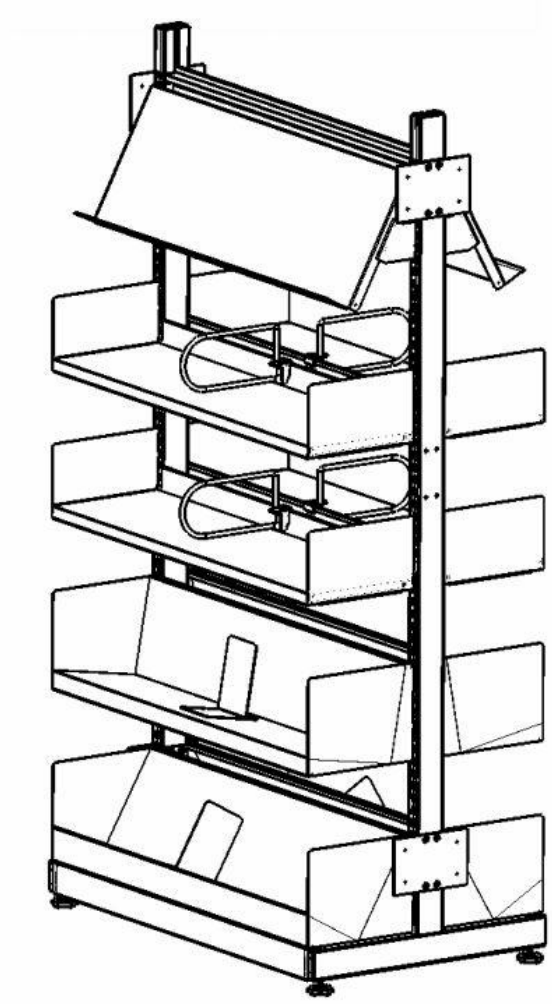

OPN ARCHITECTS

Joplin Public Library

SH-11
ITEM CODE

FURNITURE SPECIFICATIONS

JOPLIN PUBLIC LIBRARY

PROJECT NO: 14289000
JOPLIN, MISSOURI
ISSUE DATE: 10/14/2016

FF&E BASIS OF DESIGN
Shelving

Manufacturer listed as basis of design only. Equal alternates can be submitted for review.

ITEM INFORMATION:

Type Mark	Collection	Count	6" Acrylic Signage	Width	Shelving Depth	Height
SH-11	Post	4	Yes	36"	10"D/10"D	66"

SIDE ONE:

Base	10" D Sloped Display Shelf, 30 Degree
Row 2	10" D Sloped Display Shelf, 10 Degree
Row 3	10" D Flat Shelf with Book Stop
Rows 4,5	Face Out Display Shelf

SIDE TWO:

Rows 1-4	12" D Periodical Old Style Hinged Shelf
Row 5	MD Zig Zag Shelf with Lip, 3 Compartments

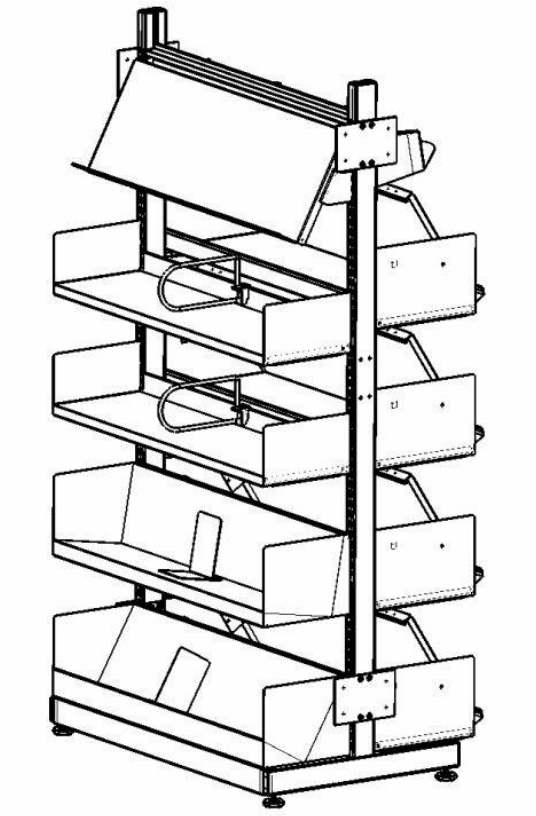

OPN ARCHITECTS

Joplin Public Library

SH-12
ITEM CODE

FURNITURE SPECIFICATIONS

JOPLIN PUBLIC LIBRARY

PROJECT NO: 14289000
JOPLIN, MISSOURI
ISSUE DATE: 10/14/2016

FF&E BASIS OF DESIGN
Shelving

Manufacturer listed as basis of design only. Equal alternates can be submitted for review.

ITEM INFORMATION:

Type Mark	Collection	Count	6" Acrylic Signage	Width	Shelving Depth	Height
SH-12	Architectural Recesses	8	No	36"	SF 10"D	78"

BOTH SIDES:

Base	10" D Sloped Display Shelf, 30 Degree
Row 2	10" D Sloped Display Shelf, 10 Degree
Rows 3-6	10" D Flat Shelf with Book Stop

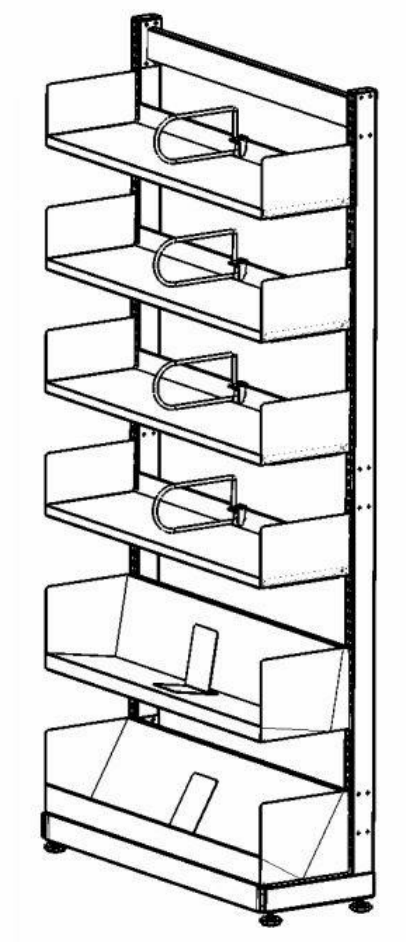

OPN ARCHITECTS

Joplin Public Library

SH-13
ITEM CODE

FURNITURE SPECIFICATIONS

JOPLIN PUBLIC LIBRARY

PROJECT NO: 14289000
JOPLIN, MISSOURI
ISSUE DATE: 10/14/2016

FF&E BASIS OF DESIGN
Shelving

Manufacturer listed as basis of design only. Equal alternates can be submitted for review.

ITEM INFORMATION:

Type Mark	Collection	Count	6" Acrylic Signage	Width	Shelving Depth	Height
SH-13	Periodical Shelving	3	No	36"	SF 12"D	78"

SIDE ONE:

Rows 1-6 12"D Periodical Old Style Hinged Shelf

OPN ARCHITECTS

Joplin Public Library

SH-14
ITEM CODE

FURNITURE SPECIFICATIONS

JOPLIN PUBLIC LIBRARY

PROJECT NO: 14289000
JOPLIN, MISSOURI
ISSUE DATE: 10/14/2016

FF&E BASIS OF DESIGN
Shelving

Manufacturer listed as basis of design only. Equal alternates can be submitted for review.

ITEM INFORMATION:

Type Mark	Collection	Count	6" Acrylic Signage	Width	Shelving Depth	Height
SH-14	Periodical Shelving	9	Yes	36"	12"D/12"D	66"

BOTH SIDES:

Rows 1-5 12"D Periodical Old Style Hinged Shelf

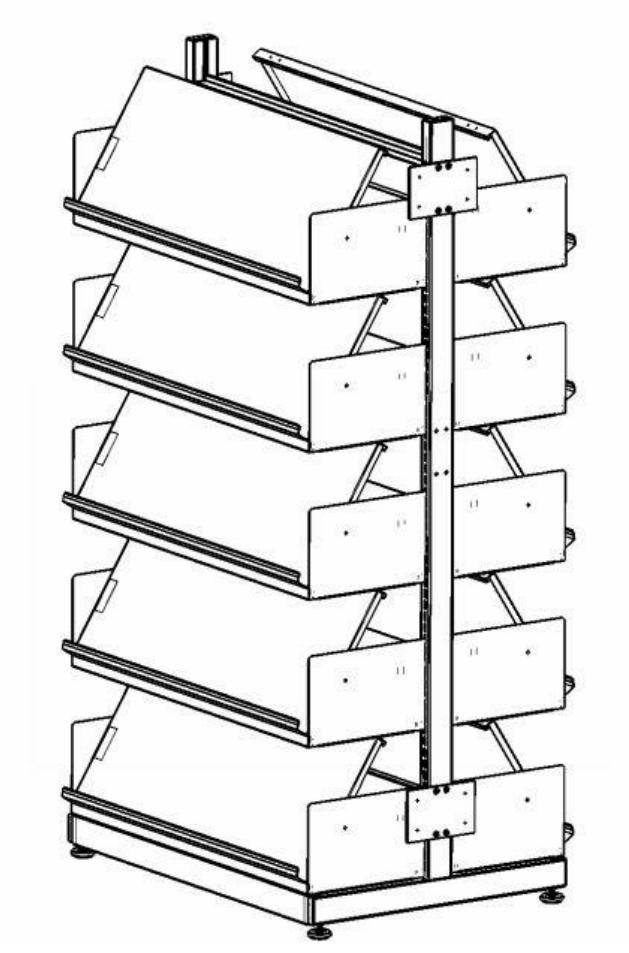

OPN ARCHITECTS

Joplin Public Library

SH-15a
ITEM CODE

FURNITURE SPECIFICATIONS

JOPLIN PUBLIC LIBRARY

PROJECT NO: 14289000
JOPLIN, MISSOURI
ISSUE DATE: 10/14/2016

FF&E BASIS OF DESIGN
Shelving

Manufacturer listed as basis of design only. Equal alternates can be submitted for review.

ITEM INFORMATION:

Type Mark	Collection	Count	6" Acrylic Signage	Width	Shelving Depth	Height
SH-15a	Adult Large Print	26	Yes	36"	10"D/10"D	66"

SIDE ONE:

Base	10" D Sloped Display Shelf, 30 degree
Row 2	10" D Sloped Display Shelf, 10 degree
Rows 3,4,5	10" D Flat Shelf with Book Stop

SIDE TWO:

Base	10" D Sloped Display Shelf, 30 degree
Row 2	10" D Sloped Display Shelf, 10 degree
Rows 3,4	10" D Flat Shelf with Book Stop
Row 5	MD Zig Zag Shelf with Lip, 3 Compartments

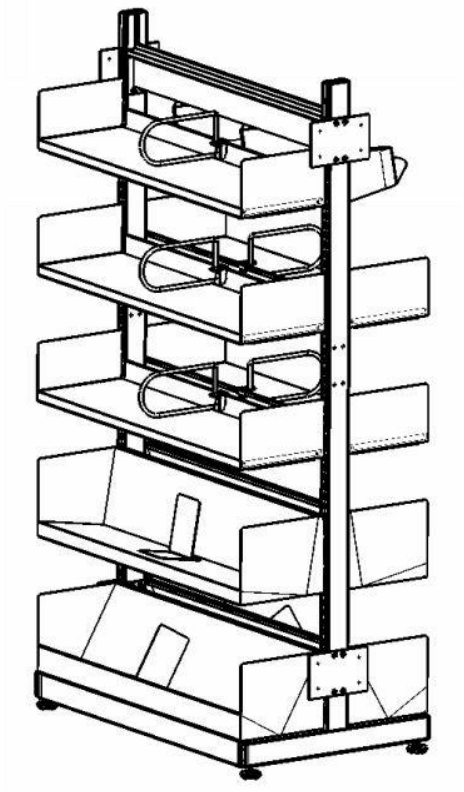

OPN ARCHITECTS

Joplin Public Library

SH-15b
ITEM CODE

FURNITURE SPECIFICATIONS

JOPLIN PUBLIC LIBRARY

PROJECT NO: 14289000
JOPLIN, MISSOURI
ISSUE DATE: 10/14/2016

FF&E BASIS OF DESIGN
Shelving

Manufacturer listed as basis of design only. Equal alternates can be submitted for review.

ITEM INFORMATION:

Type Mark	Collection	Count	6" Acrylic Signage	Width	Shelving Depth	Height
SH-15b	Adult Audio, Adult Fiction	101	Yes	36"	10"D/10"D	66"

SIDE ONE:

Base	10" D Sloped Display Shelf, 30 degree
Row 2	10" D Sloped Display Shelf, 10 degree
Rows 3,4,5	10" D Flat Shelf with Book Stop

SIDE TWO:

Base	10" D Sloped Display Shelf, 30 degree
Row 2	10" D Sloped Display Shelf, 10 degree
Rows 3,4	10" D Flat Shelf with Book Stop
Row 5	MD Zig Zag Shelf with Lip, 4 Compartments

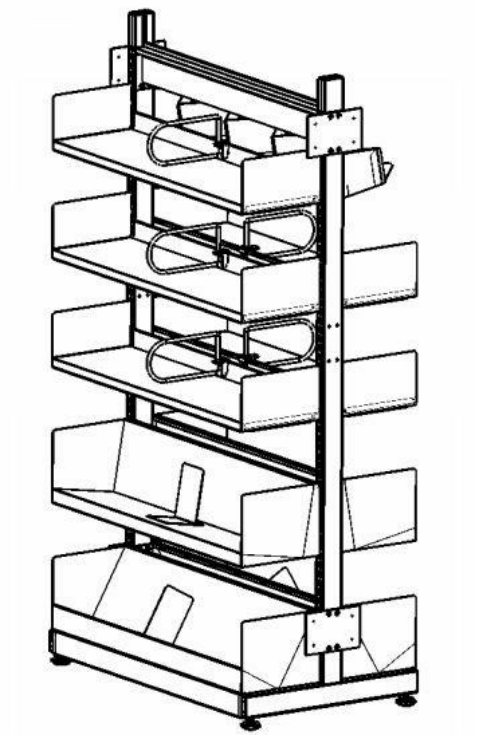

OPN ARCHITECTS

Joplin Public Library

SH-16
ITEM CODE

FURNITURE SPECIFICATIONS

JOPLIN PUBLIC LIBRARY

PROJECT NO: 14289000
JOPLIN, MISSOURI
ISSUE DATE: 10/14/2016

FF&E BASIS OF DESIGN
Shelving

Manufacturer listed as basis of design only. Equal alternates can be submitted for review.

ITEM INFORMATION:

Type Mark	Collection	Count	6" Acrylic Signage	Width	Shelving Depth	Height
SH-16	Newspaper Display	3	No	36"	SF 10"D	66"

SIDE ONE:

Rows 1-4 10" D Flat Shelf with Book Stop

OTHER:

Shelves to have Magboxes. See AC-2 specification sheet.

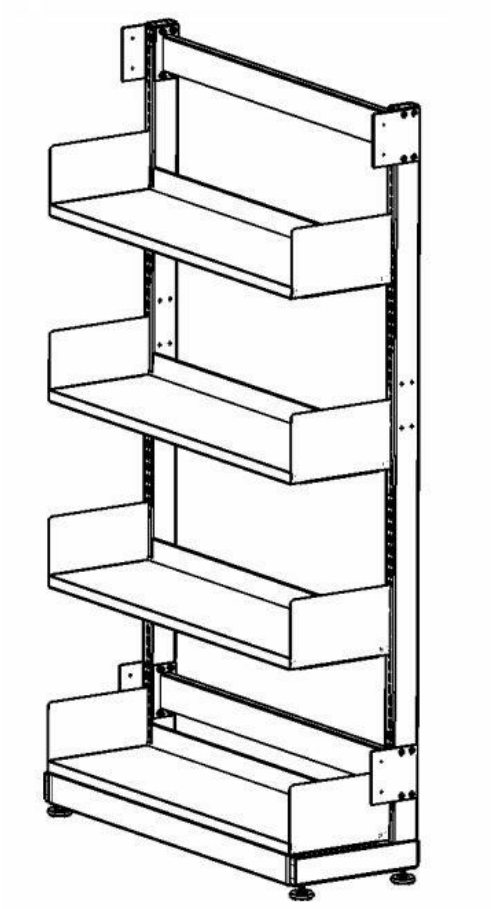

OPN ARCHITECTS

Joplin Public Library

SH-17
ITEM CODE

FURNITURE SPECIFICATIONS

JOPLIN PUBLIC LIBRARY

PROJECT NO: 14289000
JOPLIN, MISSOURI
ISSUE DATE: 10/14/2016

FF&E BASIS OF DESIGN
Shelving

Manufacturer listed as basis of design only. Equal alternates can be submitted for review.

ITEM INFORMATION:

Type Mark	Collection	Count	6" Acrylic Signage	Width	Shelving Depth	Height
SH-17	Teen	9	Yes	36"	10"D/10"D	66"

SIDE ONE:

Base	10" D Sloped Display Shelf, 30 degree
Row 2	10" D Sloped Display Shelf, 10 degree
Rows 3,4,5	10" D Flat Shelf with Book Stop

SIDE TWO:

Base	10" D Sloped Display Shelf, 30 degree
Row 2	10" D Sloped Display Shelf, 10 degree
Rows 3,4	10" D Flat Shelf with Book Stop
Row 5	MD Zig Zag Shelf with Lip, 4 Compartments

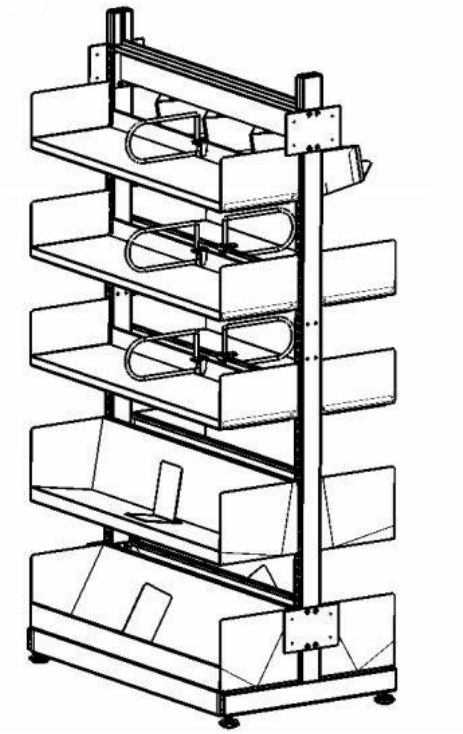

OPN ARCHITECTS

Joplin Public Library

SH-18
ITEM CODE

FURNITURE SPECIFICATIONS

JOPLIN PUBLIC LIBRARY

PROJECT NO: 14289000
JOPLIN, MISSOURI
ISSUE DATE: 10/14/2016

FF&E BASIS OF DESIGN
Shelving

Manufacturer listed as basis of design only. Equal alternates can be submitted for review.

ITEM INFORMATION:

Type Mark	Collection	Count	6" Acrylic Signage	Width	Shelving Depth	Height
SH-18	Teen	8	Yes	36"	10"D/10"D	66"

BOTH SIDES:

Base	10" D Sloped Display Shelf, 30 degree
Row 2	10" D Sloped Display Shelf, 10 degree
Rows 3,4,5	10" D Flat Shelf with Book Stop

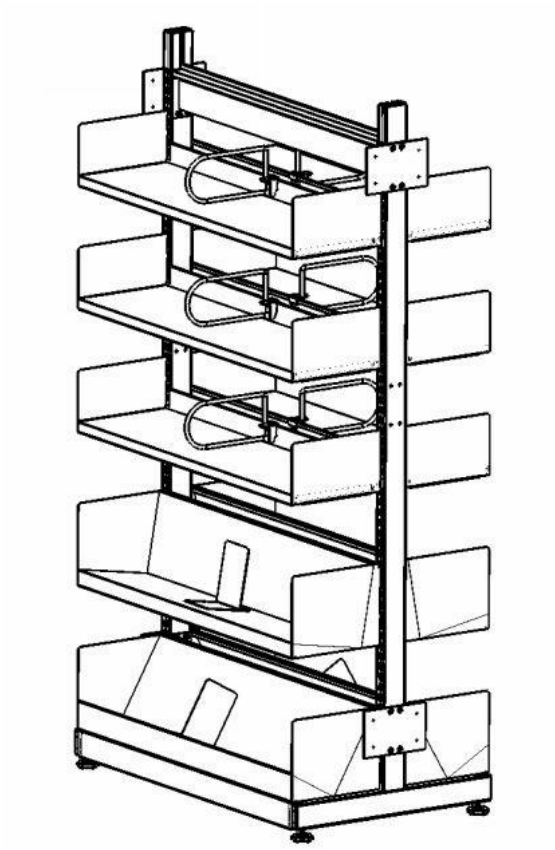

OPN ARCHITECTS

Joplin Public Library

SH-19
ITEM CODE

FURNITURE SPECIFICATIONS

JOPLIN PUBLIC LIBRARY

PROJECT NO: 14289000
JOPLIN, MISSOURI
ISSUE DATE: 10/14/2016

FF&E BASIS OF DESIGN
Shelving

Manufacturer listed as basis of design only. Equal alternates can be submitted for review.

ITEM INFORMATION:

Type Mark	Collection	Count	6" Acrylic Signage	Width	Shelving Depth	Height
SH-19	Print Reference	8	Yes	36"	10"D/10"D	48"

SIDE ONE:

Base	10" D Sloped Display Shelf, 30 degree
Row 2	10" D Sloped Display Shelf, 10 degree
Row 3	10" D Flat Shelf with Book Stop

SIDE TWO:

Base	10" D Sloped Display Shelf, 30 degree
Row 2	10" D Sloped Display Shelf, 10 degree
Row 3	MD Zig Zag Shelf with Lip, 3 Compartments

OPN ARCHITECTS

Joplin Public Library

SH-20
ITEM CODE

FURNITURE SPECIFICATIONS

JOPLIN PUBLIC LIBRARY

PROJECT NO: 14289000
JOPLIN, MISSOURI
ISSUE DATE: 10/14/2016

FF&E BASIS OF DESIGN
Shelving

Manufacturer listed as basis of design only. Equal alternates can be submitted for review.

ITEM INFORMATION:

Type Mark	Collection	Count	6" Acrylic Signage	Width	Shelving Depth	Height
SH-20	Print Reference	4	Yes	36"	10"D/10"D	48"

BOTH SIDES:

Base	10" D Sloped Display Shelf, 30 degree
Row 2	10" D Sloped Display Shelf, 10 degree
Row 3	10" D Flat Shelf with Book Stop

OPN ARCHITECTS

Joplin Public Library

SH-21
ITEM CODE

FURNITURE SPECIFICATIONS

JOPLIN PUBLIC LIBRARY

PROJECT NO: 14289000
JOPLIN, MISSOURI
ISSUE DATE: 10/14/2016

FF&E BASIS OF DESIGN
Shelving

Manufacturer listed as basis of design only. Equal alternates can be submitted for review.

ITEM INFORMATION:

Type Mark	Collection	Count	6" Acrylic Signage	Width	Shelving Depth	Height
SH-21	Adult DVD	21	Yes	36"	10"D/10"D	66"

BOTH SIDES:

Rows 1-5 10"D MD Browser Shelf with 6 Compartments

OPN ARCHITECTS

Joplin Public Library

SH-22
ITEM CODE

FURNITURE SPECIFICATIONS

JOPLIN PUBLIC LIBRARY

PROJECT NO: 14289000
JOPLIN, MISSOURI
ISSUE DATE: 10/14/2016

FF&E BASIS OF DESIGN
Shelving

Manufacturer listed as basis of design only. Equal alternates can be submitted for review.

ITEM INFORMATION:

Type Mark	Collection	Count	6" Acrylic Signage	Width	Shelving Depth	Height
SH-22	Adult Fiction	4	Yes	30"	10"D/10"D	66"

BOTH SIDES:

Base	10" D Sloped Display Shelf, 30 degree
Row 2	10" D Sloped Display Shelf, 10 degree
Rows 3,4,5	10" D Flat Shelf with Book Stop

OPN ARCHITECTS

Joplin Public Library

SH-23
ITEM CODE

FURNITURE SPECIFICATIONS

JOPLIN PUBLIC LIBRARY

PROJECT NO: 14289000
JOPLIN, MISSOURI
ISSUE DATE: 10/14/2016

FF&E BASIS OF DESIGN
Shelving

Manufacturer listed as basis of design only. Equal alternates can be submitted for review.

ITEM INFORMATION:

Type Mark	Collection	Count	6" Acrylic Signage	Width	Shelving Depth	Height
SH-23	Adult Fiction	4	No	36"	SF 10"D	66"

SIDE ONE:

Base	10" D Sloped Display Shelf, 30 degree
Row 2	10" D Sloped Display Shelf, 10 degree
Rows 3-5	10" D Flat Shelf with Book Stop

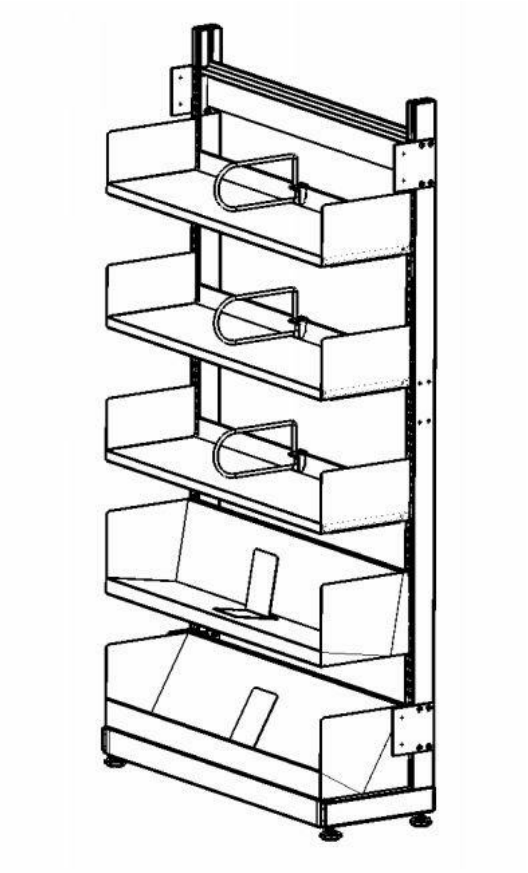

OPN ARCHITECTS

Joplin Public Library

SH-24
ITEM CODE

FURNITURE SPECIFICATIONS

JOPLIN PUBLIC LIBRARY

PROJECT NO: 14289000
JOPLIN, MISSOURI
ISSUE DATE: 10/14/2016

FF&E BASIS OF DESIGN
Shelving

Manufacturer listed as basis of design only. Equal alternates can be submitted for review.

ITEM INFORMATION:

Type Mark	Collection	Count	6" Acrylic Signage	Width	Shelving Depth	Height
SH-24	Adult Fiction	2	No	36"	SF 10"D	66"

SIDE ONE:

Base	10" D Sloped Display Shelf, 30 degree
Row 2	10" D Sloped Display Shelf, 10 degree
Rows 3,4,5	10" D Flat Shelf with Book Stop

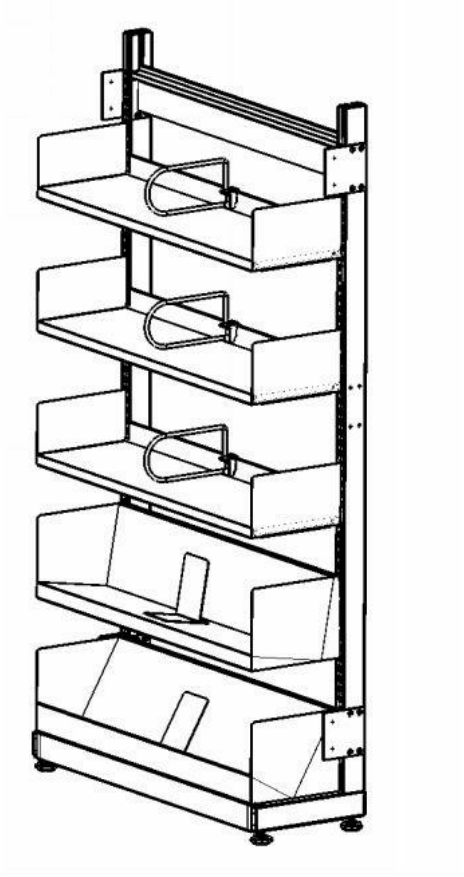

OPN ARCHITECTS

Joplin Public Library

SH-25
ITEM CODE

FURNITURE SPECIFICATIONS

JOPLIN PUBLIC LIBRARY

PROJECT NO: 14289000
JOPLIN, MISSOURI
ISSUE DATE: 10/14/2016

FF&E BASIS OF DESIGN
Shelving

Manufacturer listed as basis of design only. Equal alternates can be submitted for review.

ITEM INFORMATION:

Type Mark	Collection	Count	6" Acrylic Signage	Width	Shelving Depth	Height
SH-25	Adult Non-Fiction	52	Yes	36"	12"D/12"D	66"

SIDE ONE:

Rows 1,2 12" D Sloped Display Shelf, 10 degree
Rows 3,4,5 12" D Flat Shelf with Book Stop

SIDE TWO:

Rows 1,2 12" D Sloped Display Shelf, 10 degree
Rows 3,4 12" D Flat Shelf with Book Stop
Row 5 MD Zig Zag Shelf with Lip, 3 Compartments

OPN ARCHITECTS

Joplin Public Library

SH-26
ITEM CODE

FURNITURE SPECIFICATIONS

JOPLIN PUBLIC LIBRARY

PROJECT NO: 14289000
JOPLIN, MISSOURI
ISSUE DATE: 10/14/2016

FF&E BASIS OF DESIGN
Shelving

Manufacturer listed as basis of design only. Equal alternates can be submitted for review.

ITEM INFORMATION:

Type Mark	Collection	Count	6" Acrylic Signage	Width	Shelving Depth	Height
SH-26	Adult Non-Fiction	34	Yes	36"	12"D/12"D	66"

BOTH SIDES:

Rows 1,2 12" D Sloped Display Shelf, 10 degree
Rows 3,4,5 12" D Flat Shelf with Book Stop

OPN ARCHITECTS

Joplin Public Library

SH-27
ITEM CODE

FURNITURE SPECIFICATIONS

JOPLIN PUBLIC LIBRARY

PROJECT NO: 14289000
JOPLIN, MISSOURI
ISSUE DATE: 10/14/2016

FF&E BASIS OF DESIGN
Shelving

Manufacturer listed as basis of design only. Equal alternates can be submitted for review.

ITEM INFORMATION:

Type Mark	Collection	Count	6" Acrylic Signage	Width	Shelving Depth	Height
SH-27	Adult Non-Fiction	13	Yes	36"	12"D/12"D	66"

SIDE ONE:

Rows 1,2 12" D Sloped Display Shelf, 10 degree
Rows 3,4,5 12" D Flat Shelf with Book Stop

SIDE TWO:

Rows 1,2 12" D Sloped Display Shelf, 10 degree
Row 3 12"D Pull Out Reference Shelf
Rows 4,5 12" D Flat Shelf with Book Stop

OPN ARCHITECTS

Joplin Public Library

SH-28a
ITEM CODE

FURNITURE SPECIFICATIONS

JOPLIN PUBLIC LIBRARY

PROJECT NO: 14289000
JOPLIN, MISSOURI
ISSUE DATE: 10/14/2016

FF&E BASIS OF DESIGN
Shelving

Manufacturer listed as basis of design only. Equal alternates can be submitted for review.

ITEM INFORMATION:

Type Mark	Collection	Count	6" Acrylic Signage	Width	Shelving Depth	Height
SH-28a	Teen Feature Wall	7	No	36"	SF 10"D	42"

SIDE ONE:

Base	10" D Sloped Display Shelf, 30 degree
Row 2	10" D Sloped Display Shelf, 10 degree
Row 3	MD Zig Zag Shelf with Lip, 4 Compartments

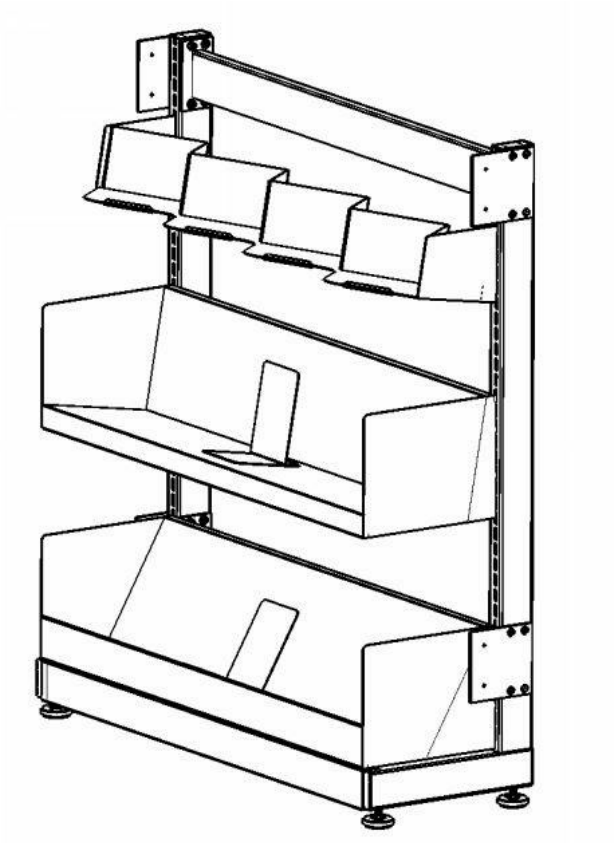

OPN ARCHITECTS

Joplin Public Library

SH-28b
ITEM CODE

FURNITURE SPECIFICATIONS

JOPLIN PUBLIC LIBRARY

PROJECT NO: 14289000
JOPLIN, MISSOURI
ISSUE DATE: 10/14/2016

FF&E BASIS OF DESIGN
Shelving

Manufacturer listed as basis of design only. Equal alternates can be submitted for review.

ITEM INFORMATION:

Type Mark	Collection	Count	6" Acrylic Signage	Width	Shelving Depth	Height
SH-28b	Non-Fiction Feature Wall	7	No	36"	SF 10"D	42"

SIDE ONE:

Base	10" D Sloped Display Shelf, 30 degree
Row 2	10" D Sloped Display Shelf, 10 degree
Row 3	MD Zig Zag Shelf with Lip, 3 Compartments

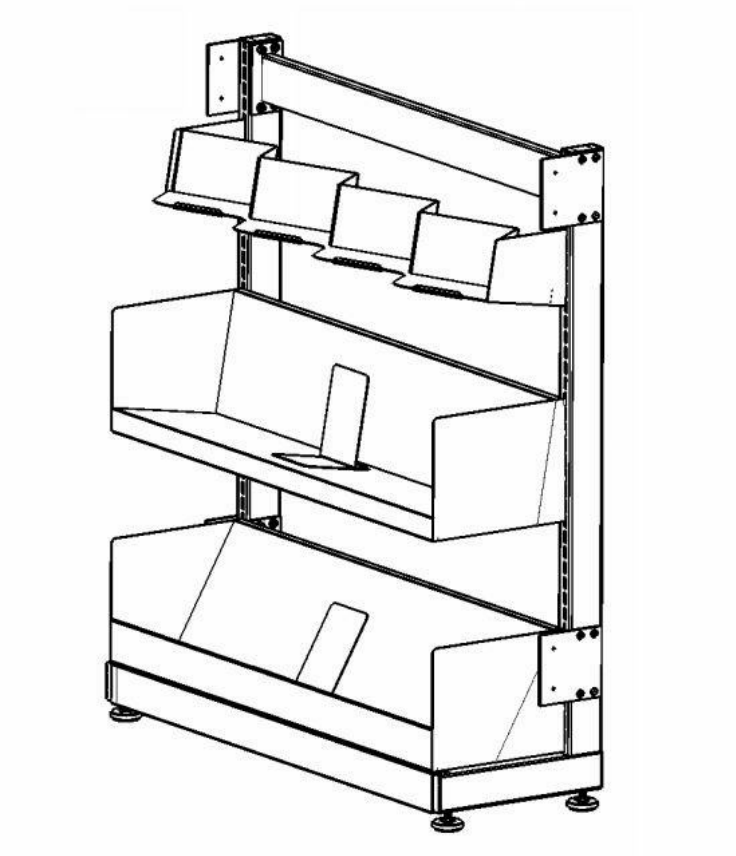

OPN ARCHITECTS

Joplin Public Library

SH-29
ITEM CODE

FURNITURE SPECIFICATIONS

JOPLIN PUBLIC LIBRARY

PROJECT NO: 14289000
JOPLIN, MISSOURI
ISSUE DATE: 10/14/2016

FF&E BASIS OF DESIGN
Shelving

Manufacturer listed as basis of design only. Equal alternates can be submitted for review.

ITEM INFORMATION:

Type Mark	Collection	Count	6" Acrylic Signage	Width	Shelving Depth	Height
SH-29	Adult Non-Fiction	4	Yes	30"	12"D/12"D	66"

BOTH SIDES:

Rows 1,2 12" D Sloped Display Shelf, 10 degree
Rows 3,4,5 12" D Flat Shelf with Book Stop

OPN ARCHITECTS

Joplin Public Library

SH-30
ITEM CODE

FURNITURE SPECIFICATIONS

JOPLIN PUBLIC LIBRARY

PROJECT NO: 14289000
JOPLIN, MISSOURI
ISSUE DATE: 10/14/2016

FF&E BASIS OF DESIGN
Shelving

Manufacturer listed as basis of design only. Equal alternates can be submitted for review.

ITEM INFORMATION:

Type Mark	Collection	Count	6" Acrylic Signage	Width	Shelving Depth	Height
SH-30	Adult Non-Fiction	4	No	36"	SF 12"D	66"

SIDE ONE:

Rows 1,2 12" D Sloped Display Shelf, 10 degree
Rows 3,4,5 12" D Flat Shelf with Book Stop

OPN ARCHITECTS

Joplin Public Library

SH-31
ITEM CODE

FURNITURE SPECIFICATIONS

JOPLIN PUBLIC LIBRARY

PROJECT NO: 14289000
JOPLIN, MISSOURI
ISSUE DATE: 10/14/2016

FF&E BASIS OF DESIGN
Shelving

Manufacturer listed as basis of design only. Equal alternates can be submitted for review.

ITEM INFORMATION:

Type Mark	Collection	Count	6" Acrylic Signage	Width	Shelving Depth	Height
SH-31	Adult Non-Fiction	2	No	30"	SF 12"D	66"

SIDE ONE:

Rows 1,2 12" D Sloped Display Shelf, 10 degree
Rows 3,4,5 12" D Flat Shelf with Book Stop

OPN ARCHITECTS

Joplin Public Library

SHCC-1
ITEM CODE

FURNITURE SPECIFICATIONS

JOPLIN PUBLIC LIBRARY

PROJECT NO: 14289000
JOPLIN, MISSOURI
ISSUE DATE: 10/14/2016

FF&E BASIS OF DESIGN
Shelving Custom Components

Manufacturer listed as basis of design only. Equal alternates can be submitted for review.

ITEM INFORMATION:

Type Mark	Custom Component Type	Count	Width	Height	Depth	Thickness
SHCC-1	Shelving Tunnel	4	36"	48"	34"	1"

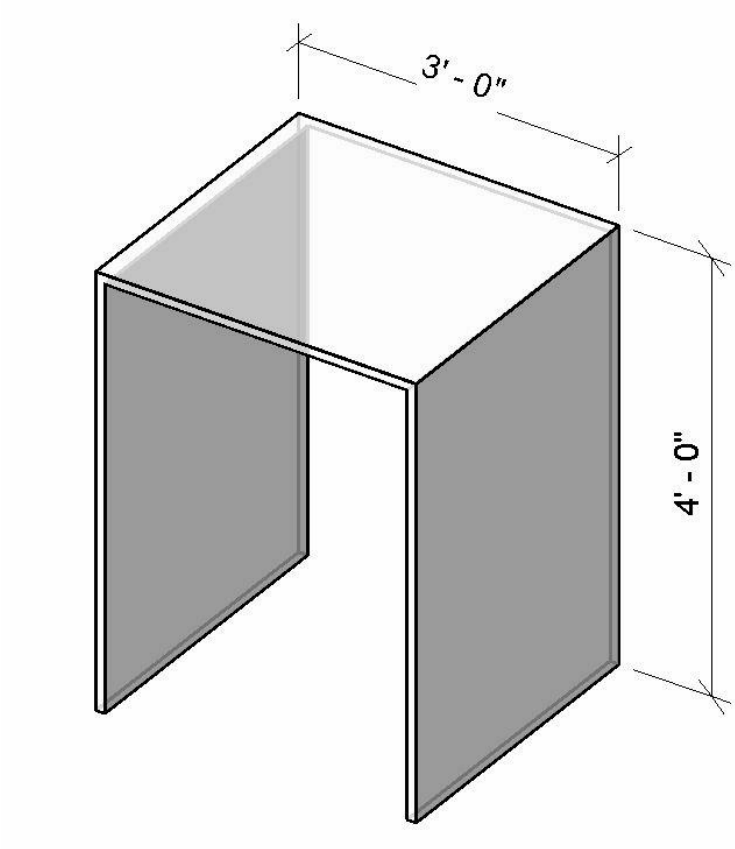

NOTE:
Custom tunnels to be the equivalence of one section of SH-1 shelving, or 34"Dx36"Wx48"H. Material shall be 1" thick Acrylic Lightblocks, color "Dry Ice". Joints shall have miter-fold to join top with sides. Sides of tunnel must be secured to shelving sections on both sides to maintain stability. No fasteners are to be visible from inside of tunnel.

OPN ARCHITECTS

COUNCIL BILL NO. 2017-357 ORDINANCE NO.

AN ORDINANCE approving a Purchase Order to be issued to Modern Business Interiors (MBI) to purchase shelving, tables, and workstations; and, authorizing the City Manager or his designee to execute said Purchase Order by and on behalf of the City of Joplin; and containing an emergency clause.

WHEREAS, the Economic Development Administration awarded Joplin a $20,000,000 library and infrastructure grant in 2013; and,

WHEREAS, the building and site construction is nearing completion and library equipment and supplies are being purchased prior to the May 22, 2017, construction end date; and,

WHEREAS, MBI was awarded the low bid on shelving.

NOW, THEREFORE, BE IT ORDAINED BY THE COUNCIL OF THE CITY OF JOPLIN, MISSOURI, as follows:

Section 1. That a Purchase Order be issued to Modern Business Interiors, hereby approved for Three Hundred Eleven Thousand One Hundred Eighty-Five Dollars and Seventy Cents. ($311,185.70)

Section 2. That the City Manager, or his designee is hereby authorized and directed to execute said Purchase Order by and on behalf of the City of Joplin, Missouri.

Section 3. This Ordinance is declared by the City Council to be an emergency within this meaning of Section 2.12, subparagraph (6), of the Home Rule Charter of the City of Joplin, Missouri, as it relates to a public improvement, and as such shall become effective immediately upon its passage.

PASSED BY THE COUNCIL OF THE CITY OF JOPLIN, MISSOURI, this _____ day of _____, 2017, by a _____vote.

_____
Michael L. Seibert – Mayor

ATTEST:

_____
Barbara Hogelin – City Clerk

APPROVED AS TO FORM:

_____
Peter C. Edwards, City Attorney

City of **JOPLIN** City Council Agenda Item

Requested Council Meeting Date: February 6, 2017
Council Bill No. 2017-358

Item: Purchase Order for the new Library Tables and Chairs
Originating Department: Planning, Development and Neighborhood Services

Attachments: 1) Bid Tabulation
2) RFP Specifications
3) Council Bill No. 2017-358

Department Head: Troy Bolander
Finance Department: Leslie Haase
City Attorney: Peter C. Edwards
City Manager: Samuel L. Anselm

Recommended Action: Approval of a Purchase Order for William Webb, with a not to exceed amount of One Hundred Thirty Thousand Two Hundred Twenty-Three Dollars and One Cent. ($130,223.01) for library work stations, tables, and chairs for the Economic Development Administration grant funded new Joplin Public Library

Background: In November 2016, the Economic Development Administration (EDA) approved the Request for Bids public posting for Furniture and Shelving. In December 2016, sealed bids were received from six (6) firms and reviewed.

Discussion: On January 9, 2017, the bid from William Webb was selected and approved by EDA. Move-in is targeted for April 2017 and furniture needs to be in place prior.

Recommendation: Staff recommends approval of the furniture purchase and it be approved on an emergency basis per Section 2.12 (6) in that said ordinance provides for public improvements and is considered an emergency by the Council and as such shall become effective immediately upon this passage as provided by the Home Rule Charter for the City of Joplin in order to maintain the project schedule to meet the EDA required completion date of May 22, 2017.

	Section 7 Displays and Tables	Section 23 Chairs andf Tables
BIDDERS		
Color Art Integrated Interiors Springfield, MO	NO BID	NO BID
Furniture by William Webb Carrollton, TX	$116,930.02	$13,292.99
Grooms Office Environments Springfield, MO	$120,253.31	NO BID
Library Furniture International Northbrook, IL	$132,769.00	NO BID
Modern Business Interiors Kansas City, MO	$125,656.49	NO BID
Scott Rice Workspace Solutions Broken Arrow, OK	NO BID	NO BID

FURNITURE SPECIFICATIONS

JOPLIN PUBLIC LIBRARY

OPN PROJECT NO: 14289000
EDA PROJECT NO: 05-79-05345
JOPLIN, MISSOURI
ISSUE DATE: 10/14/16

REVISED PER EDA COMMENTARY ON 10/28



OPN ARCHITECTS

Joplin Public Library

TABLE OF CONTENTS

UPFRONT SPECIFICATIONS

Section Name	Section
Project Information	1
Instructions to Bidders	2
General Conditions of the Contract	3
EDA Contracting Provisions for Construction Projects	3b
Supplemental Conditions	4
Proposal	5
Shelving Stack Descriptions	6

FURNITURE SPECIFICATIONS/BID FORMS

Furniture Type(s)	Manufacturer	Section
Display/Tables	3Branch	7
Book Trolley	Anaco	8
Technology Table	Bernhardt Design	9
Recliner	Carolina	10
Lounge Seating	Coalesse	11
Chairs/Stools/Tables	Davis	12
Lounge Seating	Decca Elan	13
Cafe Chair	Falcon	14
Microfiche Cabinet	Gaylord Archival	15
Sensory Wall Panels	Gressco	16
Lounge Seating	Haworth	17
Laptop Tables	HBF	18
Stacking Chairs/Task Chairs/Nesting Tables	Herman Miller, Inc.	19
Lounge Seating	HighTower	20
Rocking Chair	IOA	21
Lounge Seating/Ottomans	Keilhauer, Corp.	22
Chairs/Occassional Tables	Knoll, Inc.	23
Lounge Seating	Krug	24
Outdoor Furniture	Landscape Forms	25
Lounge Seating	Loewenstein	26
Lounge Seating/Ottomans	LogiFlex	27
Computer Tables	Nienkamper	28
Childs Chairs	Palmieri	29
Task Chairs	Steelcase	30
Workstations/Office Typicals	Allsteel	31

OPN ARCHITECTS

Joplin Public Library

TABLE OF CONTENTS

FURNITURE SPECIFICATIONS/BID FORMS CONTINUED

Special Upholstery Instructions	32
Standard Product Alternate Form	33

FULL SIZE DRAWINGS

Furniture Plan Area A (Includes Landscape Furniture)
Furniture Plan Area B
Furniture Plan Area C (Includes Landscape Furniture)
Furniture Plan Area D

OPN ARCHITECTS

COUNCIL BILL NO. 2017-358 ORDINANCE NO.

AN ORDINANCE approving a Purchase Order to be issued to William Webb to purchase tables and chairs; and, authorizing the City Manager or his designee to execute said Purchase Order by and on behalf of the City of Joplin; and containing an emergency clause.

WHEREAS, the Economic Development Administration awarded Joplin a $20,000,000 library and infrastructure grant in 2013; and,

WHEREAS, the building and site construction is nearing completion and library equipment and supplies are being purchased prior to the May 22, 2017, construction end date; and,

WHEREAS, William Webb was awarded the low bid on tables and chairs.

NOW, THEREFORE, BE IT ORDAINED BY THE COUNCIL OF THE CITY OF JOPLIN, MISSOURI, as follows:

Section 1. That a Purchase Order be issued to William Webb, hereby approved for One Hundred Thirty Thousand Two Hundred Twenty-Three Dollars and One Cent ($130,223.01).

Section 2. That the City Manager, or his designee, is hereby authorized and directed to execute said Purchase Order by and on behalf of the City of Joplin, Missouri.

Section 3. This Ordinance is declared by the City Council to be an emergency within this meaning of Section 2.12, subparagraph (6), of the Home Rule Charter of the City of Joplin, Missouri, as it relates to a public improvements, and as such shall become effective immediately upon its passage.

PASSED BY THE COUNCIL OF THE CITY OF JOPLIN, MISSOURI, this _____ day of _____, 2017, by a _____vote.

_____
Michael Seibert, Mayor

ATTEST:

_____
Barbara L. Hogelin, City Clerk

APPROVED AS TO FORM:

_____
Peter C. Edwards, City Attorney

Joplin Public Library Furniture Bid Tabulation

Tables, Chairs and Workstations	9-Jan-17	
	Section 28 **Chairs, Tables**	**Section 31** **Workstations**
BIDDERS		
Color Art Integrated Interiors Springfield, MO	$13,784.42	NO BID
Furniture by William Webb Carrollton, TX	NO BID	NO BID
Grooms Office Environments Springfield, MO	$25,906.56	$144,164.36
Library Furniture International Northbrook, IL	$17,026.00	NO BID
Modern Business Interiors Kansas City, MO	$13,634.11	$125,335.02
Scott Rice Workspace Solutions Broken Arrow, OK	$14,254.70	NO BID

City of **JOPLIN** City Council Agenda Item

Requested Council Meeting Date: February 6, 2017
Council Bill No. 2017-359

Item: Purchase Order for the new Library Workstations, Tables and Chairs
Originating Department: Planning, Development and Neighborhood Services

Attachments: 1) Bid Tabulation
2) RFP Specification
3) Council Bill No. 2017-359

Department Head: Troy Bolander
Finance Department: Leslie Haase
City Attorney: Peter C. Edwards
City Manager: Samuel L. Anselm

Recommended Action: Approval of a Purchase Order for Modern Business Interiors, with a not to exceed amount of One Hundred Thirty-Eight Thousand, Nine Hundred Sixty-Nine Dollars and Thirteen Cents. ($138,969.13) for library work stations, tables, and chairs for the Economic Development Administration grant funded new Joplin Public Library

Background: In November 2016, the Economic Development Administration (EDA) approved the Request for Bids public posting for Furniture and Shelving. In December 2016, sealed bids were received from six (6) firms and reviewed.

Discussion: On January 9, 2017, the bid from Modern Business Interiors was selected and approved by EDA. Move-in is targeted for April 2017 and furniture needs to be in place prior.

Recommendation: Staff recommends approval of the furniture purchase and it be approved on an emergency basis per Section 2.12 (6) in that said ordinance provides for public improvements and is considered an emergency by the Council and as such shall become effective immediately upon this passage as provided by the Home Rule Charter for the City of Joplin in order to maintain the project schedule to meet the EDA required completion date of May 22, 2017.

FURNITURE SPECIFICATIONS

JOPLIN PUBLIC LIBRARY

OPN PROJECT NO: 14289000
EDA PROJECT NO: 05-79-05345
JOPLIN, MISSOURI
ISSUE DATE: 10/14/16

REVISED PER EDA COMMENTARY ON 10/28



OPN ARCHITECTS

Joplin Public Library

TABLE OF CONTENTS

UPFRONT SPECIFICATIONS

Section Name	Section
Project Information	1
Instructions to Bidders	2
General Conditions of the Contract	3
EDA Contracting Provisions for Construction Projects	3b
Supplemental Conditions	4
Proposal	5
Shelving Stack Descriptions	6

FURNITURE SPECIFICATIONS/BID FORMS

Furniture Type(s)	Manufacturer	Section
Display/Tables	3Branch	7
Book Trolley	Anaco	8
Technology Table	Bernhardt Design	9
Recliner	Carolina	10
Lounge Seating	Coalesse	11
Chairs/Stools/Tables	Davis	12
Lounge Seating	Decca Elan	13
Cafe Chair	Falcon	14
Microfiche Cabinet	Gaylord Archival	15
Sensory Wall Panels	Gressco	16
Lounge Seating	Haworth	17
Laptop Tables	HBF	18
Stacking Chairs/Task Chairs/Nesting Tables	Herman Miller, Inc.	19
Lounge Seating	HighTower	20
Rocking Chair	IOA	21
Lounge Seating/Ottomans	Keilhauer, Corp.	22
Chairs/Occassional Tables	Knoll, Inc.	23
Lounge Seating	Krug	24
Outdoor Furniture	Landscape Forms	25
Lounge Seating	Loewenstein	26
Lounge Seating/Ottomans	LogiFlex	27
Computer Tables	Nienkamper	28
Childs Chairs	Palmieri	29
Task Chairs	Steelcase	30
Workstations/Office Typicals	Allsteel	31

OPN ARCHITECTS

Joplin Public Library

TABLE OF CONTENTS

FURNITURE SPECIFICATIONS/BID FORMS CONTINUED

Special Upholstery Instructions	32
Standard Product Alternate Form	33

FULL SIZE DRAWINGS

Furniture Plan Area A (Includes Landscape Furniture)
Furniture Plan Area B
Furniture Plan Area C (Includes Landscape Furniture)
Furniture Plan Area D

OPN ARCHITECTS

COUNCIL BILL NO. 2017-359 ORDINANCE NO.

AN ORDINANCE approving a Purchase Order to be issued to Modern Business Interiors (MBI) to purchase chairs, tables and workstations; and, authorizing the City Manager or his designee to execute said Purchase Order by and on behalf of the City of Joplin; and containing an emergency clause.

WHEREAS, the Economic Development Administration awarded Joplin a $20,000,000 library and infrastructure grant in 2013; and,

WHEREAS, the building and site construction is nearing completion and library equipment and supplies are being purchased prior to the May 22, 2017, construction end date; and,

WHEREAS, MBI was awarded the low bid on chairs, tables and workstations.

NOW, THEREFORE, BE IT ORDAINED BY THE COUNCIL OF THE CITY OF JOPLIN, MISSOURI, as follows:

Section 1. That a Purchase Order be issued to Modern Business Interiors, hereby approved for One Hundred Thirty-Eight Thousand, Nine Hundred Sixty-Nine Dollars and Thirteen Cents. ($138,969.13)

Section 2. That the City Manager, or his designee is hereby authorized and directed to execute said Purchase Order by and on behalf of the City of Joplin, Missouri.

Section 3. This Ordinance is declared by the City Council to be an emergency within this meaning of Section 2.12, subparagraph (6), of the Home Rule Charter of the City of Joplin, Missouri, as it relates to a public improvement, and as such shall become effective immediately upon its passage.

PASSED BY THE COUNCIL OF THE CITY OF JOPLIN, MISSOURI, this _____ day of _____, 2017, by a _____vote.

_____
Michael Seibert, Mayor

ATTEST:

_____
Barbara L. Hogelin, City Clerk

APPROVED AS TO FORM:

_____
Peter C. Edwards, City Attorney

	Section 9 Bernhardt Design	Section 12 Davis Furniture	Section 13 Elan by Decca	Section 16 Gressco	Section 18 HBF	Section 19 Herman Miller	Section 20 Hightower	Section 24 Krug	Section 26 Loewenstein	Section 32 ESI Monitor Arms
BIDDERS										
Color Art Integrated Interiors Springfield, MO	$6,311.11	NO BID	$55,031.01	NO BID	$14,402.24	NO BID	$21,409.24	NO BID	$4,680.36	$1,728.63
Furniture by William Webb Carrollton, TX	NO BID	$38,110.00	$56,614.59	NO BID	$14,650.00	NO BID	$20,990.00	NO BID	NO BID	$3,130.20
Grooms Office Environments Springfield, MO	$6,110.04	$37,227.98	$54,230.61	$1,961.93	$14,390.12	$144,804.88	$19,897.16	$32,714.31	$4,089.12	$1,541.63
Library Furniture International Northbrook, IL	NO BID	NO BID	NO BID	NO BID	NO BID	NO BID	NO BID	NO BID	NO BID	NO BID
Modern Business Interiors Kansas City, MO	$6,233.59	$41,909.12	$59,049.39	$2,443.29	$15,165.67	NO BID	$20,881.06	$34,547.12	$4,512.77	$1,808.30
Scott Rice Workspace Solutions Broken Arrow, OK	$6,525.05	NO BID	NO BID	NO BID	$15,455.28	NO BID	$21,541.18	$43,409.15	$4,996.96	$1,549.23

NOTES:

Low Bid
No bids were submitted for this section.
Entire Section was not bid
Alternate Submitted - Not Equal
Alternate Submitted

City of **JOPLIN** City Council Agenda Item

Requested Council Meeting Date: February 6, 2017
Council Bill No. 2017-360

Item: Purchase Order for the new Joplin Library tables, chairs, and furniture
Originating Department: Planning, Development and Neighborhood Services

Attachments: 1) Bid Tabulation
2) Council Bill No. 2017-360
3) RFP Specifications

Department Head: Troy Bolander
Finance Department: Leslie Haase
City Attorney: Peter C. Edwards
City Manager: Samuel L. Anselm

Recommended Action: Approval of a Purchase Order for Grooms, with a not to exceed amount of Three Hundred Sixteen Thousand, Nine Hundred Sixty-Seven Dollars and Seventy-Eight Cents. ($316,967.78) for library tables, chairs and other furniture for the Economic Development Administration grant funded new Joplin Public Library.

Background: In November 2016, the Economic Development Administration (EDA) approved the Request for Bids public posting for Furniture and Equipment. In December 2016, sealed bids were received from six (6) firms and reviewed.

Discussion: On January 9, 2017, the lowest bid from Grooms was selected and approved by EDA. Move-in is targeted for April 2017 and furniture needs to be in place prior.

Recommendation: Staff recommends approval of the furniture units purchase and it be approved on an emergency basis per Section 2.12 (6) in that said ordinance provides for public improvements and is considered an emergency by the Council and as such shall become effective immediately upon this passage as provided by the Home Rule Charter for the City of Joplin in order to maintain the project schedule to meet the EDA required completion date of May 22, 2017.

FURNITURE SPECIFICATIONS

JOPLIN PUBLIC LIBRARY

OPN PROJECT NO: 14289000
EDA PROJECT NO: 05-79-05345
JOPLIN, MISSOURI
ISSUE DATE: 10/14/16

REVISED PER EDA COMMENTARY ON 10/28



OPN ARCHITECTS

Joplin Public Library

TABLE OF CONTENTS

UPFRONT SPECIFICATIONS

Section Name	Section
Project Information	1
Instructions to Bidders	2
General Conditions of the Contract	3
EDA Contracting Provisions for Construction Projects	3b
Supplemental Conditions	4
Proposal	5
Shelving Stack Descriptions	6

FURNITURE SPECIFICATIONS/BID FORMS

Furniture Type(s)	Manufacturer	Section
Display/Tables	3Branch	7
Book Trolley	Anaco	8
Technology Table	Bernhardt Design	9
Recliner	Carolina	10
Lounge Seating	Coalesse	11
Chairs/Stools/Tables	Davis	12
Lounge Seating	Decca Elan	13
Cafe Chair	Falcon	14
Microfiche Cabinet	Gaylord Archival	15
Sensory Wall Panels	Gressco	16
Lounge Seating	Haworth	17
Laptop Tables	HBF	18
Stacking Chairs/Task Chairs/Nesting Tables	Herman Miller, Inc.	19
Lounge Seating	HighTower	20
Rocking Chair	IOA	21
Lounge Seating/Ottomans	Keilhauer, Corp.	22
Chairs/Occassional Tables	Knoll, Inc.	23
Lounge Seating	Krug	24
Outdoor Furniture	Landscape Forms	25
Lounge Seating	Loewenstein	26
Lounge Seating/Ottomans	LogiFlex	27
Computer Tables	Nienkamper	28
Childs Chairs	Palmieri	29
Task Chairs	Steelcase	30
Workstations/Office Typicals	Allsteel	31

OPN ARCHITECTS

Joplin Public Library

TABLE OF CONTENTS

FURNITURE SPECIFICATIONS/BID FORMS CONTINUED

Special Upholstery Instructions	32
Standard Product Alternate Form	33

FULL SIZE DRAWINGS

Furniture Plan Area A (Includes Landscape Furniture)
Furniture Plan Area B
Furniture Plan Area C (Includes Landscape Furniture)
Furniture Plan Area D

OPN ARCHITECTS

COUNCIL BILL NO. 2017-360 ORDINANCE NO.

AN ORDINANCE approving a Purchase Order to be issued to Grooms Office Environments to purchase tables, chairs, and other furniture; and, authorizing the City Manager or his designee to execute said Purchase Order by and on behalf of the City of Joplin; and containing an emergency clause.

WHEREAS, the Economic Development Administration awarded Joplin a $20,000,000 library and infrastructure grant in 2013; and,

WHEREAS, the building and site construction is nearing completion and library equipment and supplies are being purchased prior to the May 22, 2017, construction end date; and,

WHEREAS, Grooms Office Environments was awarded the low bid on tables, chairs and other furniture.

NOW, THEREFORE, BE IT ORDAINED BY THE COUNCIL OF THE CITY OF JOPLIN, MISSOURI, as follows:

Section 1. That a Purchase Order be issued to Grooms Office Environments, hereby approved for Three Hundred Sixteen Thousand Nine Hundred Sixty-Seven Dollars and Seventy-Eight Cents ($316,967.78).

Section 2. That the City Manager, or his designee is hereby authorized and directed to execute said Purchase Order by and on behalf of the City of Joplin, Missouri.

Section 3. This Ordinance is declared by the City Council to be an emergency within this meaning of Section 2.12, (6), of the Home Rule Charter of the City of Joplin, Missouri, as it relates to a public improvement, and as such shall become effective immediately upon its passage.

PASSED BY THE COUNCIL OF THE CITY OF JOPLIN, MISSOURI, this _____ day of _____, 2017, by a _____vote.

_____
Michael Seibert, Mayor

ATTEST:

_____
Barbara L. Hogelin, City Clerk

APPROVED AS TO FORM:

_____
Peter C. Edwards, City Attorney

BID TABULATION RESULTS
JANUARY 24, 2017

BIDDERS	Section 10 Carolina	Section 11 Coalesse	Section 14 Falcon	Section 21 ICA	Section 22 Keilhauer	Section 25 Landscape Forms	Section 27 LoglFlex	Section 29 Palmieri	Section 33 Nucraft Lectern
Color Art Integrated Interiors Springfield, MO	$1,535.83	$48,281.14	$4,928.58	$2,102.48	$33,302.59	$15,871.88	$6,929.70	$1,025.84	$4,512.69
Furniture by William Webb Carrollton, TX	NO BID	$55,567.00	NO BID	$2,845.00	$34,070.00	$17,830.87	NO BID	$2,224.00	$5,411.00
Grooms Office Environments Springfield, MO	$1,601.70	NO BID (NO SHEET INCLUDED)	$5,243.58	$2,171.20	$33,580.76	$16,718.54	$8,703.82	$1,391.77	$4,897.59
Library Furniture International Northbrook, IL	NO BID	NO BID	NO BID	NO BID	NO BID	NO BID	NO BID	NO BID	NO BID
Modern Business Interiors Kansas City, MO	$1,890.94	NO BID	$5,450.82	$2,310.59	$34,712.79	$18,458.87	$8,624.14	$1,296.13	$4,852.33
Scott Rice Workspace Solutions Broken Arrow, OK	$1,656.18	$51,191.87	$5,376.24	NO BID	NO BID	$18,362.56	NO BID	NO BID	$4,785.94

NOTES:



Low Bid
No bids were submitted for this section.
Entire Section was not bid
Alternate Submitted - Not Equal
Alternate Submitted

City of **JOPLIN** City Council Agenda Item

Requested Council Meeting Date: February 6, 2017
Council Bill No. 2017-361

Item: Purchase Agreement for the new Joplin Library Chairs and Seating
Originating Department: Planning, Development and Neighborhood Services

Attachments: 1) Bid Tabulation
2) RFP Specifications
3) Council Bill No. 2017-361

Department Head: Troy Bolander
Finance Department: Leslie Haase
City Attorney: Peter C. Edwards
City Manager: Samuel L. Anselm

Recommended Action: Approval of a Purchase Order for Color Art, with a not to exceed amount of One Hundred Eighteen Thousand Four Hundred Ninety Dollars and Seventy-Three Cents. ($118,490.73) for library chairs and seating for the Economic Development Administration grant funded new Joplin Public Library.

Background: In November 2016, the Economic Development Administration (EDA) approved the Request for Bids public posting for Furniture and Equipment. In December 2016, sealed bids were received from six (6) firms and reviewed.

Discussion: On January 9, 2017, the lowest bid from Color Art was selected and approved by EDA. Move-in is targeted for April 2017 and furniture needs to be in place prior.

Recommendation: Staff recommends approval of the furniture units purchase and it be approved on an emergency basis per Section 2.12 (6) in that said ordinance provides for public improvements and is considered an emergency by the Council and as such shall become effective immediately upon this passage as provided by the Home Rule Charter for the City of Joplin in order to maintain the project schedule to meet the EDA required completion date of May 22, 2017.

FURNITURE SPECIFICATIONS

JOPLIN PUBLIC LIBRARY

OPN PROJECT NO: 14289000
EDA PROJECT NO: 05-79-05345
JOPLIN, MISSOURI
ISSUE DATE: 10/14/16

REVISED PER EDA COMMENTARY ON 10/28



OPN ARCHITECTS

Joplin Public Library

TABLE OF CONTENTS

UPFRONT SPECIFICATIONS

Section Name	Section
Project Information	1
Instructions to Bidders	2
General Conditions of the Contract	3
EDA Contracting Provisions for Construction Projects	3b
Supplemental Conditions	4
Proposal	5
Shelving Stack Descriptions	6

FURNITURE SPECIFICATIONS/BID FORMS

Furniture Type(s)	Manufacturer	Section
Display/Tables	3Branch	7
Book Trolley	Anaco	8
Technology Table	Bernhardt Design	9
Recliner	Carolina	10
Lounge Seating	Coalesse	11
Chairs/Stools/Tables	Davis	12
Lounge Seating	Decca Elan	13
Cafe Chair	Falcon	14
Microfiche Cabinet	Gaylord Archival	15
Sensory Wall Panels	Gressco	16
Lounge Seating	Haworth	17
Laptop Tables	HBF	18
Stacking Chairs/Task Chairs/Nesting Tables	Herman Miller, Inc.	19
Lounge Seating	HighTower	20
Rocking Chair	IOA	21
Lounge Seating/Ottomans	Keilhauer, Corp.	22
Chairs/Occassional Tables	Knoll, Inc.	23
Lounge Seating	Krug	24
Outdoor Furniture	Landscape Forms	25
Lounge Seating	Loewenstein	26
Lounge Seating/Ottomans	LogiFlex	27
Computer Tables	Nienkamper	28
Childs Chairs	Palmieri	29
Task Chairs	Steelcase	30
Workstations/Office Typicals	Allsteel	31

OPN ARCHITECTS

Joplin Public Library

TABLE OF CONTENTS

FURNITURE SPECIFICATIONS/BID FORMS CONTINUED

Special Upholstery Instructions	32
Standard Product Alternate Form	33

FULL SIZE DRAWINGS

Furniture Plan Area A (Includes Landscape Furniture)
Furniture Plan Area B
Furniture Plan Area C (Includes Landscape Furniture)
Furniture Plan Area D

OPN ARCHITECTS

COUNCIL BILL NO. 2017-361 ORDINANCE NO.

AN ORDINANCE approving a Purchase Order to be issued to Color Art to purchase various style chairs and seating furniture; and, authorizing the City Manager or his designee to execute said Purchase Order by and on behalf of the City of Joplin; and containing an emergency clause.

WHEREAS, the Economic Development Administration awarded Joplin a $20,000,000 library and infrastructure grant in 2013; and,

WHEREAS, the building and site construction is nearing completion and library equipment and supplies are being purchased prior to the May 22, 2017, construction end date; and,

WHEREAS, Color Art was awarded the low bid various style chairs, seating, and other furniture.

NOW, THEREFORE, BE IT ORDAINED BY THE COUNCIL OF THE CITY OF JOPLIN, MISSOURI, as follows:

Section 1. That a Purchase Order be issued to Color Art, hereby approved for One Hundred and Eighteen Thousand, Four Hundred and Ninety Dollars and Seventy-Three Cents. ($118,490.73)

Section 2. That the City Manager, or his designee, is hereby authorized and directed to execute said Purchase Order by and on behalf of the City of Joplin, Missouri.

Section 3. This Ordinance is declared by the City Council to be an emergency within this meaning of Section 2.12, subparagraph (6), of the Home Rule Charter of the City of Joplin, Missouri, as it relates to a public improvement, and as such shall become effective immediately upon its passage.

PASSED BY THE COUNCIL OF THE CITY OF JOPLIN, MISSOURI, this _____ day of _____, 2017, by a _____vote.

_____
Michael Seibert, Mayor

ATTEST:

_____
Barbara L. Hogelin, City Clerk

APPROVED AS TO FORM:

_____
Peter C. Edwards, City Attorney

CLOSING DATE:	20-Jan-2017	DEPT:	Public Works
STARTING TIME	10:00 AM		
CLOSING TIME:	10:20 AM	BID OPENED BY:	Jeff Oliver, Kim Newhouse
Demolition		LOCATION:	1116 E. Hill Street

COMPANY	BIDS
B & D Yardbuilders	$ 3,168.00
Big John's Heavy Equipment	no bid
Camcor	no bid
Jodan Disposal	$ 2,449.00
Nelson's Enterprises	$ 1,849.00


COUNCIL Bill 2017-362
1116 H. HILL ST.







City of **JOPLIN** City Council Agenda Item

Requested Council Meeting Date February 6, 2017

Item: COUNCIL BILL NO. 2017-362
Originating Department: BUILDING REGULATIONS

Attachments: 1) Council Bill No. 2017- 362
2) Photograph of Property
3) Bid Tabulation

Building Regulations: Brian Wicklund
Planning and Community Development Manager: Troy Bolander
Finance Department: Leslie Haase
City Attorney: Peter C. Edwards
City Manager: Samuel L. Anselm

Recommended Action: Approval of Contract with Nelson Demolition to remove the structures, and any remaining debris including foundation and footings located at 1116 E. Hill St.

Summary: The above listed address was "tagged" as dangerous buildings on December 18, 2015. The structures were determined to be dangerous under sub sections of the Dangerous Building Code (Section 26-612, Joplin City Code). On January 6, 2016. An advertisement for bids was published in the Joplin Globe with bids being received on January 20, 2016. For the removal of structures and any reaming debris including footings and foundations. At that time bids were received as follows:

Nelson Demolition	$ 1,849.00
B & D Yardbuilders	$ 3,168.00
Jordan Disposal	$ 2,449.00

A Special Tax Bill will be issued after the demolition is completed. The Special Tax Bill acts as a lien against the property until it is paid, with the owner having five years to pay off the assessment. The bill also is a personal debt of the owner.

Recommendation: City Staff recommends that the demolition removal contract be awarded to Nelson Demolition for the amount of $ 1,849.00 and that it be approved on an emergency basis within the meaning of section 2.12 (1) for the immediate preservation of public health and welfare.

COUNCIL BILL NO. 2017 – 362 ORDINANCE NO.

AN ORDINANCE approving the contract by and between the City of Joplin and Nelson Demolition for the demolition of the structure(s) and clearing of lot area and located at 1116 E. Hill in the City of Joplin, Missouri, for the amount of One Thousand Eight Hundred and Ninety-Nine 00/100 Dollars (1,849.00); providing how the cost thereof shall be paid; how the assessment thereof shall be made; and containing an emergency clause.

BE IT ORDAINED BY THE COUNCIL OF THE CITY OF JOPLIN, MISSOURI, as follows:

Section 1. That the contract with Nelson Demolition in the amount of One Thousand Eight Hundred Ninety-nine 00/100 Dollars ($1,849.00) is hereby approved for the demolition of the structure(s) and clearing of lot area located at 1116 E. Hill St.

Section 2. The contractor will be paid in cash for the portion of the work performed by him, and this amount will be appropriated from the Revolving Public Improvement Fund, and will be evidenced by a special tax bill made and levied against 1116 E. Hill St. and legally described as:

ALL OF LOT NUMBERED SEVENTEEN (17) IN BLOCK SIX (6) IN EAST JOPLIN CITY, NOW A PART OF THE CITY OF JOPLIN, JASPER COUNTY, MISSOURI, ACCORDING TO THE RECORDED PLAT THEROF.

Section 3: That the City of Joplin declares that this ordinance an emergency pursuant to Section 2.12 (1) of the Home Rule Charter in that it is an ordinance for the immediate preservation of the public peace, property, health, safety or morals. Specifically, this ordinance approves the award of contract to a demolition contractor for the demolition and removal of a structure determined to be dangerous by the Joplin Building Board, and because this structure has been deemed dangerous and a nuisance, its immediate removal is required to preserve public safety and health. The City Council herby declares that this ordinance shall be in full force and effect from after its passage.

Passed by the Council of the City of Joplin, Missouri, this _____ day of _____, 2017, by a _____ vote.

_____
Michael L. Seibert – Mayor

ATTEST:

_____
Barbara Hogelin – City Clerk

APPROVED AS TO FORM:

_____

Peter C. Edwards, City Attorney

City of **JOPLIN** City Council Agenda Item

Requested Council Meeting Date February 6, 2017

Item: COUNCIL BILL NO. 2017-363
Originating Department: BUILDING REGULATIONS

Attachments: 1) Council Bill No. 2017- 363
2) Photograph of Property
3) Bid Tabulation

Building Regulations: Brian Wicklund :
Planning and Community Development Manager: Troy Bolander
Finance Department: Leslie Haase
City Attorney: Peter C. Edwards
City Manager: Samuel L. Anselm

Recommended Action: Approval of Contract with Nelson Demolition to remove the structures, and any remaining debris including foundation and footings located at 519 N. Jackson

Summary: The above listed address was "tagged" as dangerous buildings on February 1, 2016. The structures were determined to be dangerous under sub sections of the Dangerous Building Code (Section 26-612, Joplin City Code). On January 6, 2017. An advertisement for bids was published in the Joplin Globe with bids being received on January 20, 2017. For the removal of structures and any reaming debris including footings and foundations. At that time bids were received as follows:

Nelson Demolition	$ 3,449.00
B & D Yardbuilders	$ 5,200.00
Jordan Disposal	$ 4,200.00

A Special Tax Bill will be issued after the demolition is completed. The Special Tax Bill acts as a lien against the property until it is paid, with the owner having five years to pay off the assessment. The bill also is a personal debt of the owner.

Recommendation: City Staff recommends that the demolition removal contract be awarded to Nelson Demolition for the amount of $ 3,449.00 and that it be approved on an emergency basis within the meaning of section 2.12 (1) for the immediate preservation of public health and welfare.

COUNCIL BILL NO. 2017 – 363 ORDINANCE NO.

AN ORDINANCE approving the contract by and between the City of Joplin and Nelson Demolition for the demolition of the structure(s) and clearing of lot area and located at 519 N. Jackson Ave. in the City of Joplin, Missouri, for the amount of Three Thousand Four Hundred and Forty-Nine 00/100 Dollars (3,449.00); providing how the cost thereof shall be paid; how the assessment thereof shall be made; and containing an emergency clause.

BE IT ORDAINED BY THE COUNCIL OF THE CITY OF JOPLIN, MISSOURI, as follows:

Section 1. That the contract with Nelson Demolition in the amount of Three Thousand Four Hundred Forty-nine 00/100 Dollars ($3,449.00) is hereby approved for the demolition of the structure(s) and clearing of lot area located at 519 N. Jackson Ave.

Section 2. The contractor will be paid in cash for the portion of the work performed by him, and this amount will be appropriated from the Revolving Public Improvement Fund, and will be evidenced by a special tax bill made and levied against 519 N. Jackson Ave. and legally described as:

ALL OF LOT NUMBERED THREE HUNDRED NINETY-ONE (391) IN NORTH HEIGHTS ADDITION TO THE CITY OF JOPLIN, JASPER COUNTY, MISSOURI, ACCORDING TO THE RECORDED PLAT THEROF.

Section 3: That the City of Joplin declares that this ordinance an emergency pursuant to Section 2.12 (1) of the Home Rule Charter in that it is an ordinance for the immediate preservation of the public peace, property, health, safety or morals. Specifically, this ordinance approves the award of contract to a demolition contractor for the demolition and removal of a structure determined to be dangerous by the Joplin Building Board, and because this structure has been deemed dangerous and a nuisance, its immediate removal is required to preserve public safety and health. The City Council herby declares that this ordinance shall be in full force and effect from after its passage.

Passed by the Council of the City of Joplin, Missouri, this _____ day of _____, 2017, by a _____ vote.

_____
Michael L. Seibert – Mayor

ATTEST:

_____
Barbara Hogelin – City Clerk

APPROVED AS TO FORM:

_____

Peter C. Edwards, City Attorney

CLOSING DATE:	20-Jan-2017	DEPT:	Public Works
STARTING TIME	10:00 AM		
CLOSING TIME:	10:20 AM	BID OPENED BY:	Jeff Oliver, Kim Newhouse
Demolition		LOCATION:	519 N. Jackson Ave.

COMPANY	BIDS
B & D Yardbuilders	$ 5,200.00
Big John's Heavy Equipment	no bid
Camcor	no bid
Jodan Disposal	$ 4,200.00
Nelson's Enterprises	$ 3,449.00


COUNCIL BILL 2017-363
519 N. JACKSON







COUNCIL BILL NO. 2017–364 ORDINANCE NO.

AN ORDINANCE approving the contract by and between the City of Joplin and B & D Yardbuilders for the demolition of the structure(s) and clearing of lot area and located at 119 N. Byers Ave. in the City of Joplin, Missouri, for the amount of Ten Thousand Five Hundred and 00/100 Dollars (10,500.00); providing how the cost thereof shall be paid; how the assessment thereof shall be made; and containing an emergency clause.

BE IT ORDAINED BY THE COUNCIL OF THE CITY OF JOPLIN, MISSOURI, as follows:

Section 1. That the contract with B & D Yardbuilders in the amount of Ten Thousand Five Hundred 00/100 Dollars ($10,500.00) is hereby approved for the demolition of the structure(s) and clearing of lot area located at 119 N. Byers Ave.

Section 2. The contractor will be paid in cash for the portion of the work performed by him, and this amount will be appropriated from the Revolving Public Improvement Fund, and will be evidenced by a special tax bill made and levied against 119 N. Byers Ave. and legally described as:

ALL OF LOT NUMBERED TWENTY-THREE (23) IN WILSON AND HUTTON'S 2ND ADDITION TO THE CITY OF JOPLIN, JASPER COUNTY, MISSOURI, ACCORDING TO THE RECORDED PLAT THEROF.

Section 3: That the City of Joplin declares that this ordinance an emergency pursuant to Section 2.12 (1) of the Home Rule Charter in that it is an ordinance for the immediate preservation of the public peace, property, health, safety or morals. Specifically, this ordinance approves the award of contract to a demolition contractor for the demolition and removal of a structure determined to be dangerous by the Joplin Building Board, and because this structure has been deemed dangerous and a nuisance, its immediate removal is required to preserve public safety and health. The City Council herby declares that this ordinance shall be in full force and effect from after its passage.

Passed by the Council of the City of Joplin, Missouri, this _____ day of _____, 2017, by a _____ vote.

_____
Michael L. Seibert – Mayor

ATTEST:

_____
Barbara Hogelin – City Clerk

APPROVED AS TO FORM:

_____
Peter C. Edwards, City Attorney


COUNCIL BILL 2017-364
119 N. BYERS







City of **JOPLIN** City Council Agenda Item

Requested Council Meeting Date February 6, 2017

Item: COUNCIL BILL NO. 2017-364
Originating Department: BUILDING REGULATIONS

Attachments: 1) Council Bill No. 2017- 364
2) Photograph of Property
3) Bid Tabulation

Building Regulations: Brian Wicklund
Planning and Community Development Manager: Troy Bolander
Finance Department: Leslie Haase
City Attorney: Peter C. Edwards
City Manager: Samuel L. Anselm

Recommended Action: Approval of Contract with B & D Yardbuilders to remove the structures, and any remaining debris including foundation and footings located at 119 N. Byers

Summary: The above listed address was "tagged" as dangerous buildings on September 17, 2015. The structures were determined to be dangerous under sub sections of the Dangerous Building Code (Section 26-612, Joplin City Code). On January 6, 2017. An advertisement for bids was published in the Joplin Globe with bids being received on January 20, 2017. For the removal of structures and any reaming debris including footings and foundations. At that time bids were received as follows.

B & D Yardbuilders	$ 10,500.00

A Special Tax Bill will be issued after the demolition is completed. The Special Tax Bill acts as a lien against the property until it is paid, with the owner having five years to pay off the assessment. The bill also is a personal debt of the owner.

Recommendation: City Staff recommends that the demolition removal contract be awarded to B & D Yardbuilders for the amount of $ 10,500.00 and that it be approved on an emergency basis within the meaning of section 2.12 (1) for the immediate preservation of public health and welfare.

CLOSING DATE:	20-Jan-2017	DEPT:	Public Works
STARTING TIME	10:00 AM		
CLOSING TIME:	10:20 AM	BID OPENED BY:	Jeff Oliver, Kim Newhouse
Demolition		LOCATION:	119 N. Byers Ave

COMPANY	BIDS
B & D Yardbuilders	$ 10,500.00
Big John's Heavy Equipment	no bid
Camcor	no bid
Jodan Disposal	no bid
Nelson's Enterprises	no bid

City of **JOPLIN** City Council Agenda Item

Requested Council Meeting Date: February 6, 2017

Item: COUNCIL BILL NO. 2017-600
Originating Department: PUBLIC WORKS - AIRPORT

Attachments: 1) Copy of Agreement
2) Council Bill

Airport Manager:	Steve Stockam	Date:
Department Head:	Nick Heatherly	Date:
Finance Department:	Leslie Haase	Date:
City Attorney:	Peter Edwards	Date:
City Manager:	Sam Anslem	Date:

Recommended Action: Approval of MoDOT Air Traffic Control Tower Operating Assistance Grant Agreement for Air Traffic Control (ATC) Services by the City of Joplin.

Background: Since February 2005 the Joplin Regional Airport started a Cost Share Agreement with the MoDOT/FAA for Air Traffic Control (ATC) services at the Joplin Regional Airport through the FAA's Contract Tower Cost Share Program. This program contracts with the FAA and a private contractor to provide the ATC services at Level I VFR towers. If not for this program smaller facilities would have to pay for the services themselves or not provide the service at all. ATC services are vital in insuring the safety of our commercial, corporate, and general aviation traffic.

Discussion: Our current MoDOT/FAA agreement calculates the city local share monthly cost at $ 2,614.00/month. Missouri State legislation makes Joplin eligible for a 50/50 local match funding for ATC services through the State Aviation Program. With this additional grant funding our local cost will be $ 1,307.00/ month.

The agreement before you is a continuation of our existing MoDOT Grant to cover the State's 50% share of the City's local match share of ATC cost at the airport. This agreement is retroactive back to October 1, 2016 thru September 30, 2017 and the city will be reimbursed for those cost.

Recommendation: Staff recommends approval of the MoDOT Air Traffic Control Tower Operating Assistance Grant Agreement on an emergency basis per section 2.12(6) of the Joplin Home Rule Charter.

CCO Form: MO19
Approved: 1/99 (RMH)
Revised: 01/15 (MWH)
Modified:

Sponsor: City of Joplin
Project No.: AIR-176-090A -2

MISSOURI HIGHWAYS AND TRANSPORTATION COMMISSION
AIR TRAFFIC CONTROL TOWER
OPERATING ASSISTANCE GRANT AGREEMENT

THIS AGREEMENT is entered into between the Missouri Highways and Transportation Commission (hereinafter, "Commission"), and the City of Joplin (hereinafter, "Sponsor").

WITNESSETH:

WHEREAS, the purpose of this Agreement is to provide financial assistance to the Sponsor for the operation of the Air Traffic Control Tower (hereinafter, "Tower") at the Joplin Regional Airport (hereinafter, "Airport") pursuant to section 305.230 RSMo, and to set forth the conditions upon which the assistance will be provided.

NOW, THEREFORE, in consideration of the mutual covenants, promises, and representations set forth below, the parties agree as follows:

(1) SCOPE OF WORK: The Sponsor agrees to operate the Tower in accordance with all rules and regulations of the Federal Aviation Administration and with all applicable Federal and State requirements.

(2) AMOUNT OF GRANT: The Commission agrees to reimburse the Sponsor up to Fifteen Thousand Five Hundred Eighty-Four Dollars ($15,584); provided, however, that in the event that state funds available to the Commission under section 305.230 RSMo are reduced so that the Commission is unable to completely satisfy its obligations to all Cities for the current state fiscal year, the Commission may recompute and reduce this grant. The designation of this grant does not create a lump sum quantity contract, but rather only represents the amount of funding available for qualifying expenses to operate the Tower during the period of October 1, 2016 to September 30, 2016. The release of all funding under this Agreement is subject to the Commission's review and approval of all project expenses to ensure that they are qualifying expenses under this program. The grant funds in this paragraph not expended or duly obligated during the project time period shall be released for use in other projects under §305.230 RSMo.

(3) AMOUNT OF MATCHING FUNDS: The Sponsor shall furnish Fifteen Thousand Five Hundred Eighty-Four Dollars ($15,584) in local matching funds. The Sponsor warrants to the Commission that it has sufficient cash on deposit to provide the local matching funds to complete the project.

(4) PERFORMANCE OF AGREEMENT: The Sponsor shall immediately notify the Commission in writing of any condition or event which may significantly affect its ability to perform the activities in accordance with the provisions of the Agreement.

(5) COMMISSION'S RIGHT TO INSPECT DOCUMENTS AND AUDIT RECORDS:

(A) The Sponsor shall submit to the Commission such data, reports, documents, and other information relating to the operation of the Tower as the Commission may require at any time.

(B) The Sponsor must maintain all records relating to this Agreement, including, but not limited to, invoices, payrolls, etc. These records must be available at all reasonable times at no charge to the Commission and/or its designees and representatives during the period of this Agreement and any extension thereof, and for three (3) years from the date of final payment made under this Agreement.

(6) THIRD PARTY CONTRACTS:

(A) Prior to execution by either party, the Sponsor shall submit to the Commission for review, comment, and approval all contracts for services included in the Scope of Work Statement to be provided to the Sponsor by a third party.

(B) The Commission shall not be liable to the contractors or subcontractor of the Sponsor or any other person not a party to this Agreement in connection with the performance of this project without specific written consent of the Commission.

(7) PAYMENTS:

(A) Timing of Payments: The Commission's payments to the Sponsor will be made on a quarterly basis. The Commission will provide a reimbursement form to be completed by the Sponsor when requesting funds.

(B) Limitations on Commission Contribution: Funds made available to the Commission and the Sponsor are subject to appropriations made by the General Assembly.

(8) RIGHT OF COMMISSION TO TERMINATE AGREEMENT: Upon written notice to the Sponsor, the Commission reserves the right to suspend or terminate all or part of the financial assistance herein provided if the Sponsor is, or has been, in violation of any of the terms of this Agreement.

(9) COMMISSION'S REPRESENTATIVE: The Commission's Chief Engineer is designated as the Commission's representative for the purpose of administering the provisions of this Agreement. The Commission's representative may designate by

written notice other persons having the authority to act on behalf of the Commission in furtherance of the performance of the Agreement.

(10) INDEMNIFICATION:

(A) To the extent allowed or imposed by law, the Sponsor shall defend, indemnify and hold harmless the Commission, including its members and department employees, from any claim or liability whether based on a claim for damages to real or personal property or to a person for any matter relating to or arising out of the Sponsor's wrongful or negligent performance of its obligations under this Agreement.

(B) The Sponsor will require any contractor procured by the Sponsor to work under this Agreement:

(1) To obtain a no cost permit from the Commission's district engineer prior to working on the Commission's right-of-way, which shall be signed by an authorized contractor representative (a permit from the Commission's district engineer will not be required for work outside of the Commission's right-of-way); and

(2) To carry commercial general liability insurance and commercial automobile liability insurance from a company authorized to issue insurance in Missouri, and to name the Commission, and the Missouri Department of Transportation and its employees, as additional named insureds in amounts sufficient to cover the sovereign immunity limits for Missouri public entities ($500,000 per claimant and $3,000,000 per occurrence) as calculated by the Missouri Department of Insurance, Financial Institutions and Professional Registration, and published annually in the Missouri Register pursuant to Section 537.610, RSMo.

(C) In no event shall the language of this Agreement constitute or be construed as a waiver or limitation for either party's rights or defenses with regard to each party's applicable sovereign, governmental, or official immunities and protections as provided by federal and state constitution or law.

(11) NONDISCRIMINATION CLAUSE: The Sponsor shall comply with all state and federal statutes applicable to the Sponsor relating to nondiscrimination, including, but not limited to, Chapter 213, RSMo; Title VI and Title VII of the Civil Rights Act of 1964, as amended (42 U.S.C. Sections 2000d and 2000e, *et seq.*); and with any provision of the "Americans with Disabilities Act" (42 U.S.C. Section 12101, *et seq.*).

(12) LAW OF MISSOURI TO GOVERN: This Agreement shall be construed according to the laws of the State of Missouri. The Sponsor shall comply with all local, state and federal laws and regulations relating to the performance of the Agreement.

(13) VENUE: It is agreed by the parties that any action at law, suit in equity, or other judicial proceeding to enforce or construe this Agreement, or respecting

its alleged breach, shall be instituted only in the Circuit Court of Cole County, Missouri.

(14) NONSOLICITATION: The Sponsor warrants that it has not employed or retained any company or person, other than a bona fide employee working for the Sponsor, to solicit or secure this Agreement, and that it has not paid or agreed to pay any company or person, other than a bona fide employee, any fee, commission, percentage, brokerage fee, gifts, or any other consideration, contingency upon or resulting from the award or making of this Agreement. For breach or violation of this warranty, the Commission shall have the right to annul this Agreement without liability, or in its discretion, to deduct from the Agreement price or consideration, or otherwise recover, the full amount of such fee, commission, percentage, brokerage fee, gifts, or contingent fee.

(15) AMENDMENTS: Any change in the Agreement, whether by modification or supplementation, must be accomplished by a supplemental agreement signed and approved by the duly authorized representatives of the Sponsor and the Commission.

(16) DISPUTES: Any disputes that arise under this Agreement shall be decided by the Commission or its representative.

(17) ASSIGNMENT: The Sponsor shall not assign, transfer or delegate any interest in this Agreement without the prior written consent of the Commission.

(18) BANKRUPTCY: Upon filing for any bankruptcy or insolvency proceeding by or against the Sponsor, whether voluntarily, or upon the appointment of a receiver, trustee, or assignee, for the benefit of creditors, the Commission reserves the right and sole discretion to either cancel this Agreement or affirm this Agreement and hold the Sponsor responsible for damages.

[Remainder of Page Intentionally Left Blank]

IN WITNESS WHEREOF, the parties have entered into this agreement on the last date written below.

Executed by the Sponsor this _____ day of _____, 20____.

Executed by the Commission this _____ day of _____, 20____.

MISSOURI HIGHWAYS AND
TRANSPORTATION COMMISSION

_____

Title _____

Attest:

_____
Secretary to the Commission

Approved as to Form:

_____
Commission Counsel

CITY OF JOPLIN

By_____

Title_____

Attest:

By_____

Title_____

Approved as to Form:

_____

Title _____

Ordinance No. _____

COUNCIL BILL NO. 2017-600 ORDINANCE NO.

AN ORDINANCE Authorization to accept an Agreement by and between the City of Joplin and Missouri Highways and Transportation Commission, for Air Traffic Control Tower Operating Assistance Grant Agreement for Air Traffic Control Services by the City of Joplin:

BE IT ORDAINED by the Council of the City of Joplin, Missouri, as follows:

Section 1. That an agreement by and between the City of Joplin and Missouri Highways and Transportation Commission for Air Traffic Control Tower Operating Assistance Grant Agreement for Air Traffic Control Services at the Joplin Regional Airport a true and accurate copy of said agreement being attached hereto and incorporated herein, is hereby approved.

Section 2. That the Director of Public Works is hereby authorized and directed to execute said Agreement by and on behalf of the City of Joplin, Missouri.

Section 3. That this Ordinance dealing with the public improvements is an emergency within the meaning of Section 2.12(6) of the Home Rule Charter of the City of Joplin, Missouri, and, as such, shall become effective immediately upon its passage. Specifically, this agreement needs to be in place to meet MoDOT timelines.

Passed by the Council of the City of Joplin, Missouri, this _____ day of _____, 2017, by a _____ vote.

_____
Michael L. Seibert, Mayor

ATTEST:

_____
Barbara L. Hogelin, City Clerk

APPROVED AS TO FORM:

_____
Peter C. Edwards, City Attorney

CCO Form: HS3A
Approved: 07/06 (AMN)
Revised: 06/13 (ASB)
Modified:

Award years: 2016-2020
Region: SW - Southwest

MISSOURI HIGHWAYS AND TRANSPORTATION COMMISSION
STATEWIDE TRANSPORTATION IMPROVEMENT PROGRAM ON CALL WORK ZONE ENFORCEMENT PROGRAM AGREEMENT

THIS AGREEMENT is entered into by the Missouri Highways and Transportation Commission (hereinafter, "Commission") and the City of Joplin, a municipal corporation in the State of Missouri (hereinafter, "City").

WITNESSETH:

NOW, THEREFORE, in consideration of the mutual covenants, promises and representations in this Agreement, the parties agree as follows:

PURPOSE: The Commission has authorized funds to be used to support Statewide Transportation Improvement Program (hereinafter, "STIP") On Call Work Zone Enforcement activities. The purpose of this Agreement is to grant the use of such funds to the City.

(2) ACTIVITY: The funds which are the subject of this Agreement are provided to support law enforcement work zone activities to further STIP On Call Work Zone Enforcement.

(3) INDEMNIFICATION:

(A) To the extent allowed or imposed by law, the City shall defend, indemnify and hold harmless the Commission, including its members and the Missouri Department of Transportation (MoDOT) employees, from any claim or liability whether based on a claim for damages to real or personal property or to a person for any matter relating to or arising out of the City's wrongful or negligent performance of its obligations under this Agreement.

(B) The City will require any contractor procured by the City to work under this Agreement:

(1) To obtain a no cost permit from the Commission's district engineer prior to working on the Commission's right-of-way, which shall be signed by an authorized contractor representative (a permit from the Commission's district engineer will not be required for work outside of the Commission's right-of-way); and

(2) To carry commercial general liability insurance and commercial automobile liability insurance from a company authorized to issue insurance in Missouri, and to name the Commission, and MoDOT and its employees, as additional named insureds in amounts sufficient to cover the sovereign immunity limits for Missouri public entities as calculated by the Missouri Department of Insurance, Financial

Institutions and Professional Registration, and published annually in the Missouri Register pursuant to Section 537.610, RSMo. The City shall cause insurer to increase the insurance amounts in accordance with those published annually in the Missouri Register pursuant to Section 537.610, RSMo.

(C) In no event shall the language of this Agreement constitute or be construed as a waiver or limitation for either party's rights or defenses with regard to each party's applicable sovereign, governmental, or official immunities and protections as provided by federal and state constitution or law.

(4) AMENDMENTS: Any change in this Agreement, whether by modification or supplementation, must be accomplished by a formal contract amendment signed and approved by the duly authorized representatives of the City and the Commission.

(5) COMMISSION REPRESENTATIVE: This Commission's District Engineer is designated as the Commission's representative for the purpose of administering the provisions of this Agreement. The Commission's representative may designate by written notice other persons having the authority to act on behalf of the Commission in furtherance of the performance of this Agreement.

(6) CITY_REPRESENTATIVE: The City's Chief of Police is designated as the City's representative for the purpose of administering the provisions of this Agreement. Further, the City's Chief of Police shall have the authority to execute Program Orders in accordance with this Agreement.

(7) NONDISCRIMINATION CLAUSE: The City shall also comply with all state and federal statutes applicable to the City relating to nondiscrimination, including, but not limited to, Chapter 213, RSMo; Title VI and Title VII of the Civil Rights Act of 1964 as amended (42 U.S.C. Sections 2000d and 2000e, *et seq*.); and with any provision of the "Americans with Disabilities Act" (42 U.S.C. Section 12101, *et seq*.).

(8) ASSIGNMENT: The City shall not assign, transfer or delegate any interest in this Agreement without the prior written consent of the Commission.

(9) LAW OF MISSOURI TO GOVERN: This Agreement shall be construed according to the laws of the State of Missouri. The City shall comply with all local, state and federal laws and regulations relating to the performance of this Agreement.

(10) CANCELLATION: The Commission may cancel this Agreement at any time for a material breach of contractual obligations by providing the City with written notice of cancellation. Should the Commission exercise its right to cancel this Agreement for such reasons, cancellation will become effective upon the date specified in the notice of cancellation sent to the City.

(11) FUNDING/REIMBURSEMENT:

(A) General: With regard to work under this Agreement, the City agrees that funds to implement work zone law enforcement activities shall only be available for reimbursement of eligible costs which have been incurred by the City. The City shall

supply to the Commission copies of all bid information, purchase orders, invoices and, for hours worked, certified payroll (on Program Agreements that include salaries). Any costs incurred by the City prior to authorization and notification to proceed from the Commission are **not** reimbursable costs. The Commission shall not be responsible for any costs associated with the activity herein unless specifically identified in this Agreement or subsequent written amendments or Task Orders.

(B) Peace Officer Standards and Training: Law enforcement work performed by a duly licensed, Peace Officer Standards and Training certified law enforcement officer will be reimbursed.

(12) EQUIPMENT:

(A) Procurement: The City may use its own procurement regulations which reflect applicable state/local laws, rules & regulations provided they adhere to the following:

(1) Equipment with a cost of $3,000 or more must be purchased on a competitive bid basis, or purchased through use of state cooperative procurement.

(2) Price or rate quotations shall be solicited from at least three (3) sources.

(3) All procurement transactions, regardless of whether by sealed bids or by negotiation, shall be conducted in a manner that provides maximum open and free competition.

(4) The City shall have a clear and accurate description of the item to be purchased. Such description shall not, in competitive procurements, contain features that unduly restrict competition. A "brand name or equal" description may be used as a means to define the performance or other requirement of procurement.

(5) If for some reason the low bid is not acceptable, the City must have written approval from the MHTC prior to bid approval and purchase.

(6) The City will make a good faith effort to utilize minority and women owned businesses within resource capabilities when procuring goods and services.

(B) Disposition: The City shall make written request to the MHTC for instructions on the proper disposition of all items of equipment provided under the terms of this contract with a cost of $3,000 or more. City must keep and maintain equipment with a cost of under $3,000 until it is no longer useful for its originally intended purpose.

(C) Replacement: No equipment may be funded on a replacement basis. Participation in equipment and manpower projects must be in addition to the City's previous twelve months authorized strength.

(13) ACCOUNTING: The City shall maintain all documentation in file for audit review; failure to provide supporting documentation at the time of audit could result in

questioned costs. The City must document the following: (1) Receipt of funds, (2) date and amount paid to officers, (3) officer's timesheet (regular hours and overtime hours). Documentation shall be kept available for inspection for representatives of the MHTC for a period of three years following date of final payments. Copies of such records shall be made available upon request.

(14) PROGRAM ORDER: On Call Work Zone Enforcement funding will be conducted under a Program Order. Each Program Order must be executed by the Commission and the City's Representative. Each Program Order shall contain, but is not limited to the following:

(A) Program Order Job Number(s).

(B) Funds available for the completion of the Program Order.

(C) Starting and completion dates for the Program Order.

(15) LIMITS ON OVERTIME: The City will not be eligible for reimbursement for any individual law enforcement officer working under this grant where said officer is claiming to have worked as a law enforcement officer for more than 16 hours in any 24 hour period.

(16) USE OF FUNDS: Any employee of the City whose salary or wages are paid in whole or in part with federal funds is prohibited from participating in certain partisan political activities, including, but not limited to, being a candidate for elective office pursuant to Title 5 United States Code (hereinafter, "U.S.C."), Sections 1501-1508. If an employee of the City participates in activities prohibited by the Hatch Act, the City shall no longer pay that employee's salary or wages with federal funds unless the requirements of 5 U.S.C. Sections 1501-1508 are not applicable to that employee pursuant to 5 U.S.C. Section 1502(c).

(17) AUDIT OF RECORDS: The City must maintain all records relating to this Agreement, including but not limited to invoices, payrolls, etc. These records must be available at all reasonable times at no charge to the Commission and/or its designees or representatives during the period of this Agreement and any extension thereof, and for three (3) years from the date of final payment made under this Agreement.

(18) VENUE: It is agreed by the parties that any action at law, suit in equity, or other judicial proceeding to enforce or construe this Agreement, or regarding its alleged breach, shall be instituted only in the Circuit Court of Cole County, Missouri.

(19) FINAL AUDIT: The Commission may, in its sole discretion, perform a final audit of project costs. The City shall refund any overpayments as determined by the final audit.

(20) SOLE BENEFICIARY: This Agreement is made for the sole benefit of the parties hereto and nothing in this Agreement shall be construed to give any rights or benefits to anyone other than the Commission and the City.

(21) EMPLOYEES ONLY: The funding granted by the Commission to the City under this Agreement extends only to reimbursement for work zone enforcement by employees of the City covered by the City worker's compensation plan.

(22) DURATION AND EXTENSION: Unless otherwise terminated, this Agreement shall be in effect for five years from the execution of this Agreement. Upon the approval of both parties, the terms and conditions of this Agreement are renewable for an additional two, one year extensions from the date of the expiration of the Agreement. Any extension shall be memorialized in an appropriate Supplemental Agreement and executed by the duly authorized representatives of the parties.

(23) AUTHORITY TO EXECUTE: The signers of this Agreement warrant that they are acting officially and properly on behalf of their respective institutions and have been duly authorized, directed and empowered to execute this Agreement.

[Remainder of Page Intentionally Left Blank]

IN WITNESS WHEREOF, the parties have entered into this Agreement on the date last written below.

Executed by the City this ___ day of _____, 20____.

Executed by the Commission this ____ day of _____, 20____.

MISSOURI HIGHWAYS AND TRANSPORTATION COMMISSION

By_____

Title_____

ATTEST:

_____
Secretary to the Commission

Approved as to Form

_____
Commission Counsel

CITY OF JOPLIN, MISSOURI

By_____

Title_____

By_____ _____

Title _____

By _____

Title_____

ATTEST:

By _____

Title_____

Approved as to Form:

_____

Title _____

Ordinance No _____

City of Joplin City Council Agenda Item

REQUESTED COUNCIL MEETING DATE: February 6, 2017
ITEM: Council Bill No. 2017-601

ORIGINATING DEPARTMENT: Joplin Police Department
ATTACHMENTS: Council Bill No. 2017-601; copy of attachments

DEPARTMENT HEAD:	Matthew Stewart	**DATE:**
CITY MANAGER:	Sam Anselm	**DATE:**
CITY ATTORNEY:	Peter Edwards	**DATE:**
FINANCE DIRECTOR:	Leslie Haase	**DATE:**

INTRODUCTION:

The Joplin Police Department requests consideration of this Council Bill. This request, if approved, would authorize a contract between the City of Joplin and the Missouri Department of Transportation for the acceptance and expenditure of grant funds. The grant is known as the Missouri Highways and Transportation Commission Statewide Transportation Improvement Program On Call Work Zone Enforcement Program (STIP). The total amount of the grant is $1,000, and will fund 100% of overtime salaries for Joplin Police Officers to conduct targeted enforcement in work zones.

SUMMARY/DISCUSSION:
The Joplin Police Department has received these grants for several years. The agreement is required to be renewed every four years. There are no fund matching requirements of the City of Joplin.

RECOMMENDATION:

Staff recommends approval of this proposal on an emergency basis.

MLS
attachment

Council Bill No. 2017-601 ORDINANCE NO.

AN ORDINANCE approving a Contract for grant money by and between the City of Joplin, Missouri and the Missouri Department of Transportation dealing generally with work zone traffic enforcement in the amount of one thousand dollars ($1,000.00); authorizing the City Manager to execute the same by and on behalf of the City of Joplin, Missouri; and containing an emergency clause.

WHEREAS, The City of Joplin has received a grant in the amount of $1,000 from the Missouri Department of Transportation;

WHEREAS, this agreement allows for the acceptance of the award and for the expenditure of the grant money;

WHEREAS, this allows for the enforcement of traffic laws in work zones as well as reducing crashes and improving worker safety in work zones;

BE IT ORDAINED BY THE COUNCIL OF THE CITY OF JOPLIN, MISSOURI, as follows:

Section 1. That the Contract for Grant Funding by and between the City of Joplin and the Missouri Department of Transportation, in a total amount of one thousand dollars ($1,000), providing for the funding of 100% of the salary and overtime of police officers to conduct work zone enforcement, a true and accurate copy of the same being attached hereto as in Exhibit, be and the same is, hereby approved.

Section 2. That the City Manager is hereby authorized and directed to execute said Agreement by and on behalf of the City of Joplin, Missouri.

Section 3. That this Ordinance is an emergency within the meaning of Section 2.12 (1) of the Home Rule Charter of the City of Joplin, Missouri, in that said ordinance is for the preservation of public property and safety, and as such, is considered an emergency and shall take effect immediately upon passage. Specifically, work zone enforcement enhances public safety.

PASSED BY THE COUNCIL OF THE CITY OF JOPLIN, MISSOURI, this _____ day of _____, 2017, by a _____ vote.

_____
Michael Siebert, Mayor

ATTEST:

_____
Barbara L. Hogelin, City Clerk

APPROVED AS TO FORM:

_____
Peter Edwards, City Attorney

I hereby certify that a sufficient amount is available in the Police Department Budget, Account Nos. 510-5590-510-1010, 1020, 1605-1650, 2050, 6005-6010, and 8210 to pay the contract amount.

_____
Leslie Haase, Director of Finance

CCO Form: HS06
Approved: 07/06 (AMN)
Revised: 04/15 (BDG)
Modified:

PROGRAM ORDER
TO AGREEMENT DATED _____

C.F.D.A. Number: 20.205

Program Order Number: GWZEC09Z

Date: 6-9-16

Contract Amount: $1,000.00

Effective Date: July 1, 2016

Completion Date: December 31, 2017

Contractor: Joplin Police Department

Mail Invoices/Vouchers to: MoDOT Traffic and Highway Safety Division
PO Box 270
Jefferson City, MO 65102

This Program Order is issued under the authority of the Agreement between the Missouri Highways and Transportation Commission (the "Commission") and the City of Joplin (the "City") dated _____ and is subject to all applicable provisions and covenants of that Agreement, which are incorporated herein by this reference.

[Remainder of Page Intentionally Left Blank]

IN WITNESS WHEREOF, the parties hereto have caused this contract to be duly executed intending to be bound thereby.

Executed by the City of Joplin this _____ day of _____, 20___.

Executed by the Commission this 13 day of June, 2016.

MISSOURI HIGHWAYS AND TRANSPORTATION COMMISSION

_____

Title _____

CITY OF JOPLIN

By _____

Title Chief of Police

Attest:

_____
Secretary to the Commission

Approved as to Form:

_____
Commission Counsel