COUNCIL AGENDA
Monday, March 20, 2017
6:00 P.M., Council Chambers

1. **Call To Order**
   Invocation
   Pledge of Allegiance of the United States of America

2. **Roll Call**

3. **Presentations**

4. **Finalization Of Consent Agenda**

5. **Reports And Communications**

6. **Citizen Requests And Petitions**

7. **Public Hearings**

8. **Consent Agenda**

   1. Minutes Of The March 6, 2017 Joplin Council Meeting

      Documents:

      MAR 6 CC MINS.PDF

   2. Council Bill NO. 2017-250
      AN ORDINANCE amending Ordinance No. 2004-256, passed by the Council of the City of Joplin, Missouri, November 15, 2004, by removing from District R-1 and including in District C-1 property as described below and located 3128 South Joplin Avenue in the City of Joplin, Jasper County, Missouri.

   3. Council Bill No. 2017-251
      AN ORDINANCE AN ORDINANCE amending Ordinance No. 2004-256, passed by the Council of the City of Joplin, Missouri, November 15, 2004, by removing from District R-1 and including in District R-2 property as described below and located 2525 South Adele Avenue in the City of Joplin, Jasper County, Missouri.

   4. Council Bill No. 2017-252
      AN ORDINANCE amending Ordinance No. 2004-256, passed by the Council of the City of Joplin, Missouri, November 15, 2004, by removing from District R-1 and including in District M-2 property as described below and located 300 feet south of the intersection of 26th Street and Prigmor Road in the City of Joplin, Jasper County, Missouri.

   5. Council Bill No. 2017-253
      AN ORDINANCE amending Ordinance No. 2004-256, passed by the Council of the City of Joplin, Missouri, November 15, 2004, by removing from District M-2 and including in District C-3 property as described below and generally described as the Southwest Corner of Newman Road and Cattleman Drive in the City of Joplin, Jasper County, Missouri.

   6. Council Bill No. 2017-254

AN ORDINANCE amending Ordinance No. 2004-256, passed by the Council of the City of Joplin, Missouri, November 15, 2004, by removing from District R-1 and including in District M-2 property as described below and described as ½ mile east of the intersection of 32nd Street and Prigmor Road in the City of Joplin, Jasper County, Missouri.

9. **Resolutions**

10. **Ordinances - Emergency**

1. COUNCIL BILL NO. 2017-119
AN ORDINANCE approving the contract between the City of Joplin, Missouri and Home Center Construction Inc. in the amount of Sixty-Seven Thousand Seven Hundred Dollars and Zero/100 ($67,700.00) for the construction of an equipment storage building at the Public Works Center (PWC); amending the Annual Budget of the City of Joplin for the Fiscal year 2016-2017 as adopted by Ordinance 2016-177 on October 17, 2016, and containing an emergency clause.

   Documents:

   SUMMARY SHEET 2017-119.PDF
   S1.0_4678.PDF
   CITY OF JOPLIN PWC BUILDING BID TAB.PDF
   COUNCIL BILL 2017-119.PDF
   JOPLIN CONSTRUCTION CONTRACT FORM - LOCAL FUNDING - 2016.PDF

2. COUNCIL BILL 2017-120
AN ORDINANCE approving the City of Joplin to enter into an agreement with Missouri American Water Company in the amount of $39,980.00 (Thirty Nine Thousand Nine Hundred Eighty and no/100 Dollars) for the relocation of water line and fire hydrant and authorizing the Director of Public Works to execute said Agreement; and containing an emergency clause.

   Documents:

   SUMMARY MOAM 32ND CENTRAL CITY RD.PDF
   CB MOAM 32ND CENTRAL CITY RD.PDF
   CONTRACT FOR WATER FACILITY RELOCATION.PDF
   EXHIBIT A.PDF
   EXHIBIT B.PDF

3. COUNCIL BILL NO. 2017-122

AN ORDINANCE declaring a public necessity for the acquisition by condemnation proceedings of real property and easements from property described as, All that part of the Southeast Quarter of the Southeast Quarter of Section 13, Township 27 North, Range 33 West, City of Joplin, Jasper County, Missouri, being all that part of the tract of land described in the General Warranty Deed duly recorded in the Jasper County Recorder's Office in Deed Book 1802, at Page 715, for the construction of public road and storm water public improvements near 29th and Arizona Avenue, directing the City Attorney to commence an action to obtain said property; and containing an emergency clause.

Documents:

CB 2017-122 ARIZONA.PDF

CB 2017-122 LOCATION MAP.PDF
CB 2017- 122 SUMMARY SHEET.PDF

4. COUNCIL BILL NO. 2017-123
AN ORDINANCE approving a Work Authorization with Burns & McDonnell Engineering Co, Inc. in the not to exceed amount of Thirty Thousand DOLLARS and 00/100 ($30,000.00) for Professional Engineering Consulting Services for NPDES Permit Renewal Support and containing an emergency clause.

Documents:

2017-123 SUMMARY SHEET.PDF
JOPLIN AUTHORIZATION DELETED PARAGRAPHS - 3-13-17 JDB PACKAGE.PDF
CB 2017-123.PDF

5. COUNCIL BILL NO. 2017-365
AN ORDINANCE approving a Purchase Order to be issued to SBD Commercial for book stack end panels and canopy tops; and, authorizing the City Manager or his designee to execute said Purchase Order by and on behalf of the City of Joplin; and containing an emergency clause.

Documents:

CB 2017-365 RFP.PDF
CB 2017-365 SUMMARY.PDF
CB 2017-365 BID.PDF
CB 2017-365.PDF

6. COUNCIL BILL NO. 2017-506
AN ORDINANCE amending the Annual Budget of the City of Joplin for the Fiscal Year 2016-2017 as adopted by Ordinance 2016-177 on October 17, 2016, to adjust appropriations and containing an emergency clause.

Documents:

CB 2017-506 SUMMARY FY 2017 BUDGET ADJUSTMENT.PDF
CB 2017-506 FY 17 BUDGET AMENDMENT ORDINANCE.PDF
CB 2017-506 SCHEDULE A BUDGET AMENDMENT MARCH 2017.PDF

11. **Ordinances - First Reading**

12. **Ordinances - Second Reading And Third Reading**

13. **Unfinished Business**

14. **New Business**

1. News From The PIO

Anyone wishing to address the Council should step to the podium and state his/her name and address. If the matter is not a Public Hearing, a request to speak to the Council should be prepared prior to the meeting. Speaking time will be limited to five (5) minutes.

Sound enhancement units are available for hearing impaired customers who provide a form of identification as security, which will be returned to the customer upon the return of the unit.

Those in need of disability-related auxiliary aids or services should contact the City Clerk's office at (417) 624-0820, ext. 220 no later than 48 hours prior to the meeting.

Notice posted at ____ p.m. on this the __ day of ____, ____. (RSMo 610.020)

CITY OF JOPLIN
CITY COUNCIL MEETING
MINUTES March 6, 2017

CALL TO ORDER
The regular meeting for the Joplin City Council was called to order at 6:00 p.m.by Mayor Michael Seibert.

INVOCATION - read by City Clerk Barbara Hogelin

PLEDGE OF ALLEGIANCE to the United States of America –led by Mr. Stinnett

ROLL CALL – Answering Roll Call were: Taylor Brown, Dan McCreary, Gary Shaw; Ryan Stanley Michael Seibert, Ryan Stanley, Phil Stinnett and Jim West. Also in attendance were City Manager Sam Anselm and City Attorney Peter Edwards. Motion by Mr. West, second by Mr. Stanley to excuse Ms. Colbert-Kean. Motion carried, 8-0.

PRESENTATIONS

FINALIZATION OF CONSENT AGENDA - There being no further business to come before the Council, the Consent Agenda was finalized.

REPORTS AND COMMUNICATIONS

CITIZEN REQUESTS AND PETITIONS
Paul Zuraw, 3302 E. 12th, Joplin Mo, addressed council concerning the city license for security guard. He asked the council if this was an old code that may be looked at and what does the $50.00 really do. He said that St. Louis, Kansas City, Neosho, Springfield, and Carthage don't have to have licenses. The City Attorney said the code was enacted in 2008 and the city has certain standards that have to be met as we have similar standards for Taxi drivers. Mr. Stinnett asked for the City Attorney to check the other cities that Mr. Zuraw mentioned that do not require fees and see if they don't require fees. Mr. Stinnett told Mr. Zuraw he did not doubt him he just wanted it checked out. The Mayor asked Mr. Zuraw to give his phone number and address current with the city clerk for information.

PUBLIC HEARINGS
Public Hearing Procedures read by City Clerk Barbara Hogelin

PUBLIC HEARING FOR COUNCIL BILL NO.2017-250 - AN ORDINANCE amending Ordinance No. 2004-256, passed by the Council of the City of Joplin, Missouri, November 15, 2004, by removing from District R-1 and including in District C-1 property as described below and located 3128 South Joplin Avenue in the City of Joplin, Jasper County, Missouri.

Mayor Seibert opened the Public Hearing

Phong Nguyen, 2216 Pennsylvania appeared on behalf of this request.

No one appeared in opposition of this request.

The public hearing was closed.

Mr. Stanley introduced Council Bill No. 2017-250. Motion by Mr. Stanley, second by Mr. McCreary that Council Bill No. 2017-250 be Placed on First Reading and Advanced to Second Reading and Third Reading. Voting in favor were Council Members: Brown, Lewis, McCreary, Shaw, Seibert, Stanley, Stinnett and West, 8. Nays: 0. Absent: 1. Colbert-Kean. The Bill was read as being **Council Bill No. 2017-250**.

PUBLIC HEARING FOR COUNCIL BILL NO. 2017-251- AN ORDINANCE AN ORDINANCE amending Ordinance No. 2004-256, passed by the Council of the City of Joplin, Missouri, November 15, 2004, by removing from District R-1 and including in District R-2 property as described below and located 2525 South Adele Avenue in the City of Joplin, Jasper County, Missouri.

Mayor Seibert opened the Public Hearing

Joel Standeford, 3373 E. Oak appeared on behalf of this request.

No one appeared in opposition of this request.

The public hearing was closed.

Mr. West introduced Council Bill No. 2017-251. Motion by Mr. West, second by Mr. Stanley that Council Bill No. 2017-251 be Placed on First Reading and Advanced to Second Reading and Third Reading. Voting in favor were Council Members: Brown, Lewis, McCreary, Shaw, Seibert, Stanley, Stinnett and West, 8. Nays: 0. Absent: 1. Colbert-Kean. The Bill was read as being **Council Bill No. 2017-251**.

PUBLIC HEARING FOR COUNCIL BILL NO. 2017-252 - AN ORDINANCE amending Ordinance No. 2004-256, passed by the Council of the City of Joplin, Missouri, November 15, 2004, by removing from District R-1 and including in District M-2 property as described below and located 300 feet south of the intersection of 26th Street and Prigmor Road in the City of Joplin, Jasper County, Missouri.

Mayor Seibert opened the Public Hearing

Joel Standeford, 3373 E. Oak appeared on behalf of this request.

No one appeared in opposition of this request.

The public hearing was closed.

Mr. West introduced Council Bill No. 2017-252. Motion by Mr. West, second by Mrs. Lewis that Council Bill No. 2017-252 be Placed on First Reading and Advanced to Second Reading and Third Reading. Voting in favor were Council Members: Brown, Lewis, McCreary, Shaw, Seibert, Stanley, Stinnett and West, 8. Nays: 0. Absent: 1. Colbert-Kean. The Bill was read as being **Council Bill No. 2017-252.**

PUBLIC HEARING FOR COUNCIL BILL NO. 2017-253 - AN ORDINANCE amending Ordinance No. 2004-256, passed by the Council of the City of Joplin, Missouri, November 15, 2004, by removing from District M-2 and including in District C-3 property as described below and generally described as the Southwest Corner of Newman Road and Cattleman Drive in the City of Joplin, Jasper County, Missouri.

Mayor Seibert opened the Public Hearing

Steve Lewis, 702 S. Main appeared on behalf of this request.

L.D. Murdock, 307 Tanner, Webb City, MO appeared on behalf of this request.

No one appeared in opposition of this request.

The public hearing was closed.

Mr. Stanley introduced Council Bill No. 2017-253. Motion by Mr. Stanley, second by Mr. McCreary that Council Bill No. 2017-253 be Placed on First Reading and Advanced to Second Reading and Third Reading. Voting in favor were Council Members: Brown, Lewis, McCreary, Shaw, Seibert, Stanley, Stinnett and West, 8. Nays: 0. Absent: 1. Colbert-Kean. The Bill was read as being **Council Bill No. 2017-253.**

PUBLIC HEARING FOR COUNCIL BILL NO. 2017-254 - AN ORDINANCE amending Ordinance No. 2004-256, passed by the Council of the City of Joplin, Missouri, November 15, 2004, by removing from District R-1 and including in District M-2 property as described below and described as ½ mile east of the intersection of 32nd Street and Prigmor Road in the City of Joplin, Jasper County, Missouri.

Mayor Seibert opened the Public Hearing

Kurt Higgins, Allgeier Martin, appeared on behalf of this request.

No one appeared in opposition of this request.

The public hearing was closed.

Mr. West introduced Council Bill No. 2017-254. Motion by Mr. West, second by Mr. Stanley that Council Bill No. 2017-254 be Placed on First Reading and Advanced to Second Reading and Third Reading. Voting in favor were Council Members: Brown, Lewis, McCreary, Shaw, Seibert, Stanley, Stinnett and West, 8. Nays: 0. Absent: 1. Colbert-Kean. The Bill was read as being **Council Bill No. 2017-254.**

CONSENT AGENDA – Motion by Mr. Shaw, second by Mr. Brown to approve the Consent Agenda. Voting in favor were Council Members: Brown, Lewis, McCreary, Shaw, Seibert, Stanley, Stinnett and West, 8. Nays: 0. Absent: 1. Colbert-Kean

Minutes of the February 21, 2017 Council Meeting

COUNCIL BILL NO. 2016-290 - AN ORDINANCE amending Ordinance No. 2004-256, passed by the Council of the City of Joplin, Missouri, November 15, 2004, by removing from District R-1 and including in District C-1-PD property as described below and located 2915 East 17th Street in the City of Joplin, Jasper County, Missouri. **Ordinance No. 2017-038**

RESOLUTIONS

ORDINANCES - EMERGENCIES

Mr. Shaw introduced COUNCIL BILL NO. 2017-112 - AN ORDINANCE approving an Agreement with Brenda Kay Burt, for the acquisition of Right of Way for the Main Street Improvement Project 15th Street to 32nd Street; and authorizing the City Manager to convey the described property rights by Quit Claim deed; and containing an emergency clause. Motion by Mr. Shaw, second by Mr. Stanley that Council Bill No. 2017-112 be approved on an emergency basis. Voting in favor were Council Members: Brown, Lewis, McCreary, Shaw, Seibert, Stanley, Stinnett and West, 8. Nays: 0. Absent: 1. Colbert-Kean. The Council Bill was declared Adopted and entitled **Ordinance No. 2017-039**

Mr. Stanley introduced COUNCIL BILL NO. 2017-115 AN ORDINANCE authorizing the City to enter into a Transportation Alternative Funds Program Agreement TAP-3205(704) with the Missouri Highways and Transportation Commission for the construction of the St. John's and Mohaska Trail projects, in the City of Joplin; authorizing the City Manager to execute said Agreement for and on behalf of the City; and containing an emergency clause. Motion by Mr. Stanley, second by Mr. McCreary that Council Bill No. 2017-115 be approved on an emergency basis. Voting in favor were Council Members: Brown, Lewis, McCreary, Shaw, Seibert, Stanley, Stinnett and West, 8. Nays: 0. Absent: 1. Colbert-Kean. The Council Bill was declared Adopted and entitled **Ordinance No. 2017-040**

Mrs. Lewis introduced COUNCIL BILL NO. 2017-116 - AN ORDINANCE approving the City of Joplin to enter into a contract with Sprouls Construction Inc. in the amount of $3,345,759.85 (Three Million Three Hundred Forty-Five Thousand Seven Hundred Fifty-Nine and 85/100 Dollars) for the Surface Project 4005 and authorizing the Director of Public Works to execute said Contract; and containing an emergency clause. Motion by Mrs. Lewis, second by Mr. Brown that Council Bill No. 2017-116 be approved on an emergency basis. Voting in favor were Council Members: Brown, Lewis, McCreary, Shaw, Seibert, Stanley, Stinnett and West, 8. Nays: 0. Absent: 1. Colbert-Kean. The Council Bill was declared Adopted and entitled **Ordinance No. 2017-041**

Mr. Shaw introduced COUNCIL BILL NO. 2017 -117 - AN ORDINANCE approving the City of Joplin to enter into a contract with Jeff Asbell Excavating & Trucking, LLC in the amount of $1,640,100.06 (One Million Six Hundred Forty Thousand One Hundred and 06/100 Dollars) for the Crossroads Phase II Road Improvements project and authorizing the Director of Public Works to execute said Agreement; and containing an emergency clause. Motion by Mr. Shaw, second by Mr. West that Council Bill No. 2017-117 be approved on an emergency basis. Voting in favor were Council Members: Brown, Lewis, McCreary, Shaw, Seibert, Stanley, Stinnett and West, 8. Nays: 0.

Absent: 1. Colbert-Kean. The Council Bill was declared Adopted and entitled **Ordinance No. 2017-042**

Mr. Brown introduced COUNCIL BILL NO. 2017-118 - AN ORDINANCE approving the City of Joplin to enter into a contract with Rosetta Construction, LLC in the amount of $795,190.00 (Seven Hundred Ninety-Five Thousand One Hundred Ninety and 0/100 Dollars) for the Crossroads Phase II Sewer and Lift Station project and authorizing the Director of Public Works to execute said Agreement; and containing an emergency clause. Motion by Mr. Brown, second by Mrs. Lewis that Council Bill No. 2017-118 be approved on an emergency basis. Voting in favor were Council Members: Brown, Lewis, McCreary, Shaw, Seibert, Stanley, Stinnett and West, 8. Nays: 0. Absent: 1. Colbert-Kean. The Council Bill was declared Adopted and entitled **Ordinance No. 2017-043**

ORDINANCES – FIRST READING

Mr. Stanley introduced COUNCIL BILL NO. 2017-505 - AN ORDINANCE amending Section 86-5, Fees at Schifferdecker Golf Course, of Article I, In General, of Chapter 86, Parks and Recreation, of the Code of Ordinances of the City of Joplin, by amending Section 86-5, Fees at Schifferdecker Golf Course, to implement certain fee language changes; and setting a date when this Ordinance shall become effective. Motion by Mr. Stanley, second by Mr. Shaw that Council Bill No. 2017-505 be passed on First Reading and Advanced to Second and Third Reading. Voting in favor were Council Members: Brown, Lewis, McCreary, Shaw, Seibert, Stanley, Stinnett and West, 8. Nays: 0. Absent: 1. Colbert-Kean. Nays: 0. Absent: 0. The Council Bill was read as being **Council Bill No. 2017-505.**

ORDINANCES – SECOND AND THIRD READING

UNFINISHED BUSINESS

NEW BUSINESS:
News by the PIO
As part of the annual Severe Weather Awareness Week, the NWS in Springfield will conduct the statewide tornado drill at 10 AM tomorrow, Tuesday, March 7. We encourage all residents to use this drill as an opportunity to plan and prepare for a real emergency. This is a good time to discuss sheltering plans with your family, and to ensure you have a working battery operated radio and flashlights, along with other necessary supplies in your designated "safe place." For more information about sheltering and preparation, please go to our website at www.joplinmo.org and click on the Emergency Management department for details.

Starting March 13 through June of this year, there will be various lane closures on St. Louis Avenue as work begins on the widening of this road.

Work will begin on the south end of the project, near the Tamko entrance, and will be done in stages to allow for through traffic. Traffic will be limited to one lane with flaggers and detours in place. Drivers are encouraged to utilize alternate routes during this period.

This month the City begins offering the Tree Limb Drop Off program allowing residents to bring their tree limbs and brush to drop off on the third Saturday of every month. It will be held from 8 a.m. to 2 p.m., on Saturday, March 18. The drop-off site is located at 1702 North Schifferdecker Avenue, about a half a mile north of Belle Center Road on the west side of Schifferdecker.

Joplin Parks and Recreation is hosting a "Kids Garage Sale" event at Memorial Hall on Saturday, March 18. Still time to get a table for $10, or stop by on Saturday to do a little shopping. Parks & Rec is also running a 10% off sale on swim passes until March 31. Residents should contact the Parks & Rec department for more information.

More details about these topics can be found on our website, www.joplinmo.org.

Chief Stewart gave an update on Nolan Murray who was injured while on duty. Chief said he was released from the hospital and is expected to make full recovery. Officer Murray is with the Jasper County Unit.

Mayor Seibert asked everyone to keep the families and friends of the two high school students who passed away Thursday in our thoughts and prayers.

Vote to go into closed session, which shall pertain to legal action, causes of action, or litigation including a public governmental body and any confidential or privileged communications between a governmental body or its representatives and its attorneys pursuant to state law, and to discuss leasing, purchase or sale of real estate by a governmental body where public knowledge of the transaction might adversely affect the legal consideration thereof, pursuant to state law; as set forth in Section 610.021 (1) (2) RSMo, as amended, 2016. This meeting, record, and vote be closed. Council shall adjourn at the end of the session. Motion by Mr. Stanley, second by Mr. West, to go in closed session. Voting in favor were Council Members: Brown, Lewis, McCreary, Shaw, Seibert, Stanley, Stinnett and West, 8. Nays: 0. Absent: 1.

There being no further business the meeting adjourned at 7:27 p.m.

Submitted,

Barbara L Hogelin

Barbara L. Hogelin, MMC/MPCC, City Clerk

City of **JOPLIN** City Council Agenda Item

Requested Council Meeting Date: March 20, 2017
Council Bills No. 2017-119
Item: Contract for Purchase and Construction of Storage Building

Originating Department: PUBLIC WORKS –OPERATIONS

Attachments: 1) Council Bill No. 2017-119
2) Bid Tabulation
3) Engineer Plans
4) Contract

Department Head: Nicholas A. Heatherly
Finance Department: Leslie Haase
City Attorney: Peter C. Edwards
City Manager: Samuel L. Anselm

Recommended Action: Authorization to enter into a contract with **Home Center Construction Inc.** to construct an equipment storage building for the Public Works Center (PWC). This contract is in the amount of $67,700.00.

Background:
The Public Works Center (PWC) contains most of the Public Works Vehicles and Equipment. A need has been identified to provide shelter for some of this equipment to increase the life of this equipment. The building was identified and approved as part of the FY 2015-2016 City budget; because funds were not used during that period there is a budget adjustment attached to this Council Bill.

Discussion:
Staff has been working with its Engineering Consultant (Miller Engineering) to design a building that would accomplish this goal of providing housing for equipment. The bids advertised in accordance with the city procurement policies and six bids were received on March 2, 2017 for this project with Home Center Construction Inc. presenting the lowest bid for the project. All funds for this project are being used from the Transportation Sales Tax (TST), with the total budget adjustment amount being $70,500.00 that includes engineering costs.

Recommendation: City staff recommends that Council approve the contract with Home Center Construction Inc. in the amount of $67,700.00 and the budget adjustment be approved on an emergency basis in accordance with Section 2.12(6) of the Joplin City Charter.

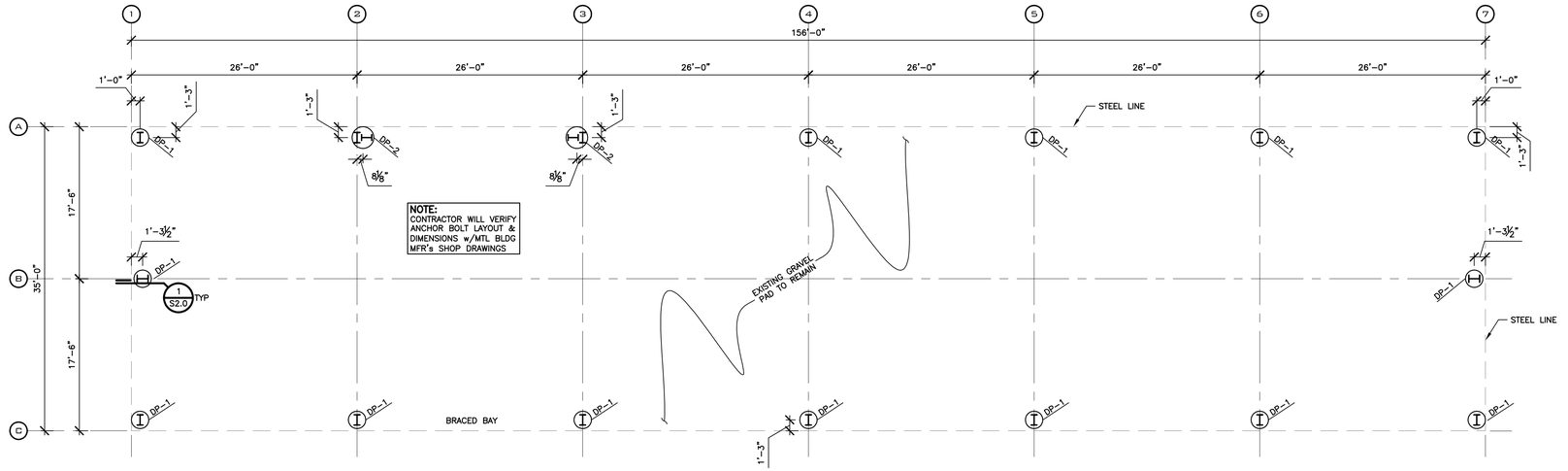

FOUNDATION PLAN

⅛"= 1'-0"

NORTH

GENERAL NOTES

G1. IN CASES OF DISCREPANCIES IN DIMENSIONS AND ELEVATIONS BETWEEN STRUCTURAL AND ARCHITECTURAL DRAWINGS, CONTRACTOR SHALL COORDINATE WITH ARCHITECT PRIOR TO FABRICATION AND CONSTRUCTION.

G2. CONTRACTOR SHALL PROVIDE TEMPORARY GUYS AND BRACING AS REQUIRED DURING CONSTRUCTION. STRUCTURE IS NOT STABLE UNTIL ALL STRUCTURAL MEMBERS, CONNECTIONS, AND DECKING ARE IN PLACE.

G3. FIELD-VERIFY ALL EXISTING CONDITIONS. NOTIFY ARCHITECT/ENGINEER WHEN EXISTING CONDITIONS ARE IN CONFLICT WITH THE CONSTRUCTION DOCUMENTS.

G4. CONTRACTOR SHALL VERIFY ANCHOR BOLT LAYOUT AND BUILDING DIMENSIONS WITH PRE-ENGINEERED METAL BUILDING MANUFACTURER'S SHOP DRAWINGS BEFORE BEGINNING CONSTRUCTION.

G5. FOUNDATION DESIGN INDICATED IN THESE DOCUMENTS WAS BASED UPON ENGINEERING JUDGEMENT. WHEN THE CONTRACTOR RECEIVES FINAL BUILDING REACTION DOCUMENTS THESE SHALL BE FORWARDED TO THE ENGINEER FOR FINAL REVIEW. THE STRUCTURAL ENGINEER OF RECORD RESERVES THE RIGHT TO MODIFY THE FOUNDATION DESIGN AFTER FINAL BUILDING REACTIONS ARE PROVIDED BY THE METAL BUILDING MANUFACTURER.

CONCRETE NOTES

C1. CONCRETE WORK SHALL CONFORM TO BUILDING CODE REQUIREMENTS FOR REINFORCED CONCRETE (ACI 318) AND SPECIFICATIONS FOR STRUCTURAL CONCRETE FOR BUILDINGS (ACI 301), LATEST EDITION.

C2. CONCRETE SHALL BE CONTROLLED CONCRETE, PROPORTIONED, MIXED AND PLACED UNDER THE SUPERVISION OF AN APPROVED CONCRETE TESTING AGENCY. SEE THE SPECIAL INSPECTION NOTES FOR ADDITIONAL INFORMATION.

C3. CONCRETE FOR PIERS AND EXTERIOR USES, SIDEWALKS, EXTERIOR SLABS ON GRADE, ETC. SHALL HAVE A 28-DAY COMPRESSIVE STRENGTH OF 4000 PSI AND SHALL BE AIR-ENTRAINED TO 6% +/- 1% WITH AN AIR-ENTRAINING ADMIXTURE CONFORMING TO ASTM C260. A MINIMUM OF 5 3/4 BAGS OF CEMENT SHALL BE USED PER CUBIC YARD WITH A SLUMP OF 4" +/- 1". THE MAXIMUM WATER TO CEMENT RATIO SHALL BE 0.45 BY WEIGHT.

C4. IF ADDITIONAL FLOWABILITY IS REQUIRED FOR PLACEMENT OF ANY CONCRETE MIX, A WATER-REDUCING ADDITIVE CONFORMING TO ASTM C494, TYPE A, SHALL BE USED. NO ADDITIONAL WATER MAY BE ADDED TO THE MIX.

C5. FLY ASH MAY BE USED AS A ONE TO ONE REPLACEMENT FOR THE CEMENT UP TO 20% OF THE TOTAL CEMENT CONTENT AS LONG AS THE AMBIENT TEMPERATURE IS ABOVE 50 DEGREES FAHRENHEIT.

C6. FINE AND COARSE AGGREGATE SHALL MEET THE REQUIREMENTS OF ASTM C33 FOR GRADING SIZE, PARTICLE DISTRIBUTION, DELETERIOUS CONTENT, SOUNDNESS AND CHERT. COURSE AGGREGATES SHALL MEET THE REQUIREMENTS OF ASTM C33 TABLE 3 CLASS 4S. FINE AGGREGATE MAY BE NATUAL OR MANUFACTURED SAND FROM QUARRIES OR PITS WHICH HAVE GIVEN SATISFACTORY SERVICE PERFORMANCE WHEN EXPOSED IN A SIMILAR MANNER TO THAT TO BE ENCOUNTERED.

C7. ALL REINFORCING STEEL SHALL CONFORM TO ASTM A615, GRADE 60. LAP ALL SPLICES 30 BAR DIAMETERS. WELDED WIRE FABRIC SHALL CONFORM TO ASTM A185. LAP FABRIC 6" ON SIDES AND ENDS. MAINTAIN WIRE 1" TO 2" BELOW TOP SURFACE OF SLABS ON GRADE.

C8. COLD-WEATHER PLACEMENT: COMPLY WITH ACI 306.1 AND AS FOLLOWS. PROTECT CONCRETE WORK FROM PHYSICAL DAMAGE OR REDUCED STRENGTH THAT COULD BE CAUSED BY FROST, FREEZING ACTIONS, OR LOW TEMPERATURES.

A. WHEN AIR TEMPERATURE HAS FALLEN TO OR IS EXPECTED TO FALL BELOW 40 DEG F, UNIFORMLY HEAT WATER AND AGGREGATES BEFORE MIXING TO OBTAIN A CONCRETE MIXTURE TEMPERATURE OF NOT LESS THAN 50 DEG F AND NOT MORE THAN 80 DEG F AT POINT OF PLACEMENT.
B. DO NOT USE FROZEN MATERIALS CONTAINING ICE OR SNOW. DO NOT PLACE CONCRETE ON FROZEN SUBGRADE OR ON SUBGRADE CONTAINING FROZEN MATERIALS.
C. DO NOT USE CHEMICAL ACCELERATORS CONTAINING CALCIUM CHLORIDE.

FOUNDATION NOTES

F1. A PAD HAS ALREADY BEEN CONSTRUCTED BY THE CITY FOR THIS STRUCTURE.

F2. EXCAVATION FOR FOOTINGS SHALL BE CUT TO ACCURATE SIZE AND DIMENSIONS AS SHOWN ON PLANS. ALL SOIL BELOW SLABS AND FOOTINGS SHALL BE PROPERLY COMPACTED AND SUBGRADE BROUGHT TO A REASONABLE TRUE AND LEVEL PLANE BEFORE PLACING CONCRETE.

F3. AFTER EXCAVATION FOR FOUNDATIONS AND PRIOR TO PLACEMENT OF STEEL REINFORCEMENT OR CONCRETE, NOTIFY SOILS ENGINEER FOR INSPECTION OF SOIL CONDITIONS.

F4. FOOTINGS SHALL BEAR AT MINIMUM DEPTHS AS NOTED IN FOOTING SECTIONS AND PLANS OR INTO APPROVED BEARING STRATA, WHICHEVER DEPTH IS GREATER. NOTE THAT FOOTING BEARING ELEVATIONS GIVEN ON THE PLANS ARE ESTIMATED DEPTHS ONLY. WHERE UNSUITABLE SOIL IS ENCOUNTERED OR WHERE FINISHED EXTERIOR GRADE VARIES FROM THE ASSUMED EXTERIOR GRADE, FOOTING DEPTHS MAY VARY.

F5. ISOLATED FOOTINGS ARE DESIGNED FOR A NET ALLOWABLE SOIL BEARING OF 2000 PSF. FOR EITHER NATURALLY OCCURRING SOIL OR COMPACTED ENGINEERED FILL. AFTER FOOTING EXCAVATIONS HAVE BEEN MADE TO DESIGN ELEVATIONS, THE INDEPENDENT TESTING AGENCY EMPLOYED BY THE OWNER SHALL INSPECT AND TEST THE BEARING SOIL WHEN SOIL OF INADEQUATE STRENGTH IS NOTED, CONTRACTOR SHALL FURTHER DEEPEN EXCAVATIONS UNTIL SUITABLE BEARING CONDITIONS ARE VERIFIED BY TESTING. OVER EXCAVATIONS MAY BE BACKFILLED WITH SUITABLE COMPACTED ENGINEERED FILL, SUITABLE GRANULAR BASE, LEAN CONCRETE OR STRUCTURAL CONCRETE BACKFILL.

METAL BUILDING NOTES

MB1. METAL BUILDING SHALL HAVE THESE BASIC DIMENSIONS: 156' LONG, 35' WIDE, 26' BAY SPACING, 16' HIGH EAVE AND 8' LOW EAVE. BUILDING WILL BEAR ON CONCRETE PEDESTALS 6" ABOVE GRADE. SEE LOAD TABLE FOR REQUIRED LOADING.

MB2. METAL BUILDING MANUFACTURER SHALL SUBMIT CALCLLATIONS AND SHOP DRAWINGS, STAMPED BY A PROFESSIONAL ENGINEER REGISTERED IN THE STATE OF MISSOURI, FOR REVIEW PRIOR TO FABRICATION.

MB3. METAL BUILDING SHALL BE DESIGNED TO RESIST THE LOADS SPECIFIED IN THE LOAD TABLE IN ACCORDANCE WITH THE REQUIREMENTS OF THE 2012 INTERNATIONAL BUILDING CODE, THE 2012 JOPLIN ADOPTIVE CODE AND THE LATEST EDITION OF THE MBMA METAL BUILDING SYSTEMS MANUAL.

MB4. METAL BUILDING VERTICAL BRACING SHALL CONSIST OF PORTAL FRAMES OR X-BRACING AS INDICATED AT LOCATIONS SHOWN ON PLANS. IF BRACING IS NOT SHOWN, METAL BUILDING MANUFACTURER SHALL COORDINATE LOCATION OF ALL BRACES TO MINIMIZE INTERFERENCE WITH ARCHITECTURAL FEATURES, MECHANICAL EQUIPMENT AND DUCTS. ROD OR CABLE BRACES MAY NOT BE SUBSTITUTED WHERE PORTAL FRAMES ARE SHOWN.

MB5. MAXIMUM PURLIN LIVE LOAD DEFLECTION SHALL NOT EXCEED SPAN/180 IN OTHER AREAS.

MB6. FRAME LIVE LOAD DEFLECTION SHALL NOT EXCEED SPAN/180 IN OTHER AREAS.

MB7. MAXIMUM GIRT LATERAL DEFLECTION FROM WIND OR SEISMIC LOADS SHALL NOT EXCEED SPAN/100 FOR GIRTS PROVIDING LATERAL SUPPORT FOR METAL SIDING ONLY

MB8. MAXIMUM BUILDING SIDE SWAY (DRIFT) FROM WIND OR SEISMIC LOADS SHALL NOT EXCEED WALL HEIGHT/80.

MB9. TYPICAL ANCHOR BOLTS SHALL BE HEADED BOLTS WITH A MINIMUM EMBEDMENT OF 16". SEE METAL BUILDING MANUFACTURER DRAWINGS FOR ANCHOR BOLT SIZE AND LOCATION.

MB10. VERIFY COLUMN PEDESTAL SIZES WITH METAL BUILDING MFR. PROVIDE FULL BEARING UNDER BASE PLATES AND 2" MIN. CONCRETE COVER AROUND ANCHOR BOLTS AND LOCATE HORIZONTAL REINFORCEMENT AND TIES TO THE OUTSIDE FOR ANCHOR BOLT CONTAINMENT.

MB11. CONCENTRATED LOADS THAT ARE TO BE ATTACHED TO THE ROOF STRUCTURE SUCH AS CEILINGS, PIPE HANGERS, MECHANICAL DUCT WORK, ELECTRICAL FIXTURES, ETC. SHALL BE ATTACHED TO PURLINS OR BEAMS. CONNECTIONS SHALL BE THRU WEB OF PURLINS – DO NOT DRILL HOLES IN THE FLANGES. DO NOT SUSPEND FROM CEILING OR METAL DECK.

SPECIAL INSPECTION NOTES

SP1. SPECIAL INSPECTIONS SHALL BE REQUIRED IN ACCORDANCE WITH CHAPTER 17 OF THE 2012 IBC. THE CONTRACTOR SHALL EMPLOY A THIRD PARTY TESTING AGENCY APPROVED BY THE OWNER FOR ALL TESTING STATED HEREIN. CONTRACTOR SHALL BE RESPONSIBLE FOR COORDINATING ALL INSPECTIONS WITH SAID INSPECTION AGENCY.

SP2. THE STRUCTRUAL ENGINEER OF RECORD HAS BEEN HIRED BY THE CITY TO BE ON-SITE TO INSPECTION THE PLACEMENT OF THE REBAR AND CONCRETE FOR THE FOOTINGS AND TO INSPECT THE BUILDING AFTER ERECTED TO VERIFY BOLTS ARE ADEQUATELY TIGHTENED.

SP3. THE SPECIAL INSPECTOR SHALL BE A QUALIFIED PERSON WHO SHALL DEMONSTRATE COMPETENCE TO PERFORM THE REQUIRED INSPECTION TO THE SATISFACTION OF THE BUILDING OFFICIAL.

SP4. THE SPECIAL INSPECTOR SHALL KEEP RECORDS OF INSPECTIONS. INSPECTION REPORTS SHALL BE SUBMITTED TO THE BUILDING OFFICIAL AND TO THE REGISTERED DESIGN PROFESSIONAL IN RESPONSIBLE CHARGE.

SP5. REPORTS SHALL INDICATE THAT WORK INSPECTED WAS DONE IN CONFORMANCE TO APPROVED CONSTRUCTION DOCUMENTS. DISCREPANCIES SHALL BE BROUGHT TO THE IMMEDIATE ATTENTION OF THE CONTRACTOR FOR CORRECTION. IF THE DISCREPANCIES ARE NOT CORRECTED, THE DISCREPANCIES SHALL BE BROUGHT TO THE ATTENTION OF BUILDING OFFICIAL AND THE REGISTERED DESIGN PROFESSIONAL IN RESPONSIBLE CHARGE PRIOR TO THE COMPLETION OF THAT PHASE OF THE WORK.

SP9. A FINAL REPORT OF INSPECTIONS DOCUMENTING REQUIRED SPECIAL INSPECTIONS AND CORRECTION OF ANY DISCREPANCIES SHALL BE SUBMITTED TO THE OWNER, BUILDING OFFICIAL AND THE REGISTERED DESIGN PROFESSIONAL IN RESPONSIBLE CHARGE AT THE COMPLETION OF THE STRUCTURAL PORTION OF THE WORK.

SP7. THE THIRD PARTY TESTING AGENCY SHALL CONTACT THE STRUCTURAL ENGINEER OF RECORD PRIOR TO INITIATION OF CONSTRUCTION.

CONCRETE CONSTRUCTION INSPECTION

SP8. INSPECT REINFORCING STEEL PRIOR TO PLACING CONCRETE. CHECK REINFORCING SIZE, SPACING AND LOCATION.

SP9. CYLINDERS SHALL BE MADE FOR DETERMINING THE CONCRETE STRENGTH FROM EACH CLASS OF CONCRETE TO BE PLACED. SAMPLES SHALL BE TAKEN NOT LESS THAN ONCE A DAY, NOR LESS THAN ONCE FOR EACH 150 CUBIC YARDS OF CONCRETE, NOR LESS THAN ONCE FOR EACH 5,000 SQUARE FEET OF SURFACE AREA FOR SLABS OR WALLS.

SP10. EACH TIME THE CYLINDERS ARE MADE THE SLUMP, AIR CONTENT AND TEMPERATURE OF THE CONCRETE SHALL ALSO BE CHECKED.

SP11. THE CONTRACTOR'S METHOD OF MAINTAINING THE MINIMUM CURING TEMPERATURE AND CURING TECHNIQUE SHALL BE REVIEWED.

LOAD TABLE

(2012 IBC)

DEAD LOADS			
ROOF			
METAL BLDG SELF WEIGHT		=	PER MTL BLDG MFR
COLLATERAL LOAD		=	2 PSF
LIVE LOADS			
ROOF (NO LIVE LOAD REDUCTIONS)		=	20 PSF
RISK CATEGORY		=	I INCIDENTAL OCCUPANCY
ROOF SNOW LOAD			
GROUND SNOW LOAD	P_g	=	30.0 PSF
FLAT ROOF SNOW LOAD	P_f	=	30.0 PSF (DO NOT REDUCE!)
SNOW EXPOSURE FACTOR	C_e	=	1.0
THERMAL FACTOR	C_t	=	1.2
SNOW LOAD IMPORTANCE FACTOR	I_s	=	0.9
WIND DESIGN DATA			
ULTIMATE DESIGN WIND SPEED	V	=	115.0 MPH
EXPOSURE CATEGORY		=	C
INTERNAL PRESSURE COEFFICIENT		=	+/-0.18
EARTHQUAKE DESIGN DATA			
SEISMIC IMPORTANCE FACTOR	I_E	=	1.00
MAPPED SPECTRAL RESPONSE ACCELERATIONS	S_S	=	0.12
	S_1	=	0.06
SITE CLASS		=	D
SPECTRAL RESPONSE COEFFICIENTS	S_{DS}	=	0.14
	S_{D1}	=	0.13
SEISMIC DESIGN CATEGORY		=	B
BASIC SEISMIC-FORCE-RESISTING SYSTEM		=	PER MTL BLDG MFR
RESPONSE MODIFICATION FACTOR	R	=	PER MTL BLDG MFR
SEISMIC RESPONSE COEFFICIENT	C_S	=	PER MTL BLDG MFR
DESIGN BASE SHEAR	V	=	PER MTL BLDG MFR
ANALYSIS PROCEDURE USED		=	PER MTL BLDG MFR

DRILLED PIER SCHEDULE

MARK	DIA	T.O. PIER	B.O. PIER	VERT REINF	TIES
DP-1	24"	SEE 1/S1.0	96'-6"	6-#5's	#3's @ 18" o.c.
DP-2	30"	SEE 1/S1.0	96'-6"	6-#5's	#3's @ 18" o.c.

NOTES:

1. CENTER ALL PIERS UNDER COLUMNS
2. TOP (3) TIES ARE AT 4" O.C. – REMAINDER ARE AT THE SPACING INDICATED (TYPICAL)

DRILLED PIER MARK → DP-2

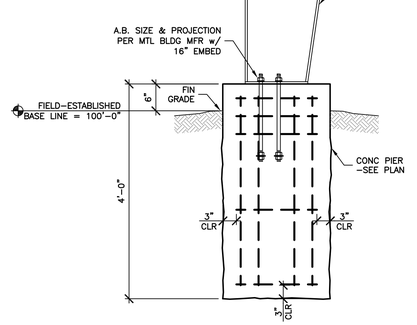

1 TYP PIER SECTION

¾"= 1'-0"

JERRY TRAVIS MILLER- ENGINEER
MISSOURI LICENSE #2003023627

DESCRIPTION	DATE

City of Joplin PWC New Building 2017

BIDS RECEIVED: March 2, 2017 @3:00 p.m.
BID OPENING: March 2, 2017 @3:00 p.m.
PLACE: City of Joplin, 602 South Main, 4th Floor Conference Room, Joplin, MO 64801

	CONTRACTORS	Infinity Contractors	Home Center Construction, Inc.	Hovey Construction & Consulting	Construction Services Group	Service Solutions, Inc.	RE Smith
Document Checklist							
	Bid Form	☑	☑	☑	☑	☑	☑
	Labor & Materials Payment Bond	☐	☐	☐	☐	☐	☐
	Performance Bond	☐	☐	☐	☐	☐	☐
	Anti-Collusion Statement	☑	☑	☑	☑	☐	☑
	Agreement Between City of Joplin & Contractor	☐	☐	☐	☐	☐	☐
	Contractor's Statement of Qualifications	☐	☑	☑	☑	☑	☑
	Certificate of Compliance & Affidavit	☐	☐	☐	☑	☐	☐
	Sub-Contractor & Supplier List	☑	☑	☑	☑	☑	☑
	Bid Bond	☑	☑	☑	☑	☑	☑
	Acknowledge Addendum 1	☑	☑	☑	☑	☑	☑
Item	**Description**	**Amount Bid**	**Amount Bid**	**Amount Bid**	**Amount Bid**	**Amount Bid**	**Amount Bid**
	Base Bid	**$ 118,677.00**	**$ 67,700.00**	**$ 193,000.00**	**$ 85,990.00**	**$ 73,788.75**	**$ 89,500.00**
	Unit Prices						
1	General Excavation & Removal	**$ 10.00**	**$ 20.00**	**$ 30.00**	**$ 14.00**	**$ 20.00**	**$ 25.00**
2	Structural Fill	**$ 5.00**	**$ 22.00**	**$ 30.00**	**$ 20.00**	**$ 25.00**	**$ 35.00**
3	Excavation & Removal of Trench Rock	**$ 20.25**	**$ 400.00**	**$ 500.00**	**$ 365.00**	**$ 45.00**	**$ 500.00**

COUNCIL BILL NO. 2017-119 ORDINANCE NO.

AN ORDINANCE approving the contract between the City of Joplin, Missouri and Home Center Construction Inc. in the amount of Sixty-Seven Thousand Seven Hundred Dollars and Zero/100 ($67,700.00) for the construction of an equipment storage building at the Public Works Center (PWC); amending the Annual Budget of the City of Joplin for the Fiscal year 2016-2017 as adopted by Ordinance 2016-177 on October 17, 2016, and containing an emergency clause.

BE IT ORDAINED by the Council of the City of Joplin, Missouri, as follows:

Section 1. That the City of Joplin enter into an Agreement between the City of Joplin and Home Center Construction Inc. for the construction of an equipment storage building at PWC in the amount of Sixty-Seven Thousand Seven Hundred Dollars and Zero/100 ($67,700.00).

Section 2. That the Director of Public Works of the City of Joplin, Missouri, is hereby authorized to execute said Agreement in substantial conformance with the attached, for and on behalf of the City of Joplin.

Section 3. That fiscal year 2016-2017 budgeted appropriations as adopted by Ordinance 2016-177 be amended by increasing appropriations by the total amount of. Seventy Thousand and Five Hundred Dollars and Zero/100 ($70,500.00).

Section 4. That the Director of Finance is hereby directed to make all necessary entries on the City records to show the increase in appropriations.

Section 5. That this Ordinance is an emergency within the means of Section 2.12 (6) in that said ordinance provides for public improvements and is considered an emergency by the Council and as such shall become effective immediately upon this passage as provided by the Home Rule Charter for the City of Joplin.

Passed by the Council of the City of Joplin, Missouri, this _____ day of _____, 2017, by a _____ vote.

_____

ATTEST: Michael L. Seibert, Mayor

_____

Barbara L. Hogelin, City Clerk

APPROVED AS TO FORM:

_____

Peter C. Edwards, City Attorney

AGREEMENT
BETWEEN
CITY OF JOPLIN AND

CITY		CONTRACTOR	
CITY OF JOPLIN **602 S. MAIN STREET** **JOPLIN, MO 64801**		Name: **Home Center Construction, Inc.** Address: 420 W. Atkinson PITTSBURG, KS. 66762	
Attention: Nick Heatherly, (Director)		Attention: Bill Warlop, (President)	
Department: **Public Works**		Phone: 620- 231-0992	Fax: 620-231-6962
Phone: 417-624-0820 x-560	Fax: 417-625-4738		

THIS AGREEMENT, made and entered into this ____ day of _____, 2017, by the parties identified above.

WITNESSETH: That whereas, the Contractor has become the lowest responsible bidder for furnishing the supervision, labor, tools, equipment, materials and supplies and for constructing the following City improvements:

PURCHASE AND CONSTRUCTION OF EQUIPMENT STORAGE BUILDING AT PWC

The City and Contractor agree to the following:

1. Manner and Time for Completion. The Contractor will furnish all supervision, labor, tools, equipment, materials and supplies necessary to perform, and to perform said work at Contractor's own expense in accordance with the contract documents and any applicable City ordinances and state and federal laws within 180 calendar days from the date Contractor is ordered to proceed, which order shall be issued by the Director of Public Works within 30 days after the date of this contract.

2. Prevailing Wages. All labor utilized in the construction of the aforementioned improvements shall be paid a wage of no less than the "prevailing hourly rate of wages" for work of a similar character in this locality, as established and amended at any time by the Department of Labor and Industrial Relations of the State of Missouri. At any time the contractor is found to not have paid prevailing wages, the contractor shall forfeit as a penalty to the city one hundred dollars for each underpaid worker employed, for each calendar day, or portion thereof such worker is paid less than the said stipulated rates for any work done under this contract.

3. Insurance Requirements. Without limiting any of the other obligations or liabilities of the Contractor, the Contractor shall secure and maintain at its own cost and expense, throughout the duration of this Contract and until the work is completed and accepted by the City of Joplin, insurance of such types and in such amounts as may be necessary to protect it and the interests of the

City of Joplin against all hazards or risks of loss as hereunder specified or which may arise out of the performance of the Contract Documents. The form and limits of such insurance, together with the underwriter thereof in each case, are subject to approval by the City of Joplin. Regardless of such approval, it shall be the responsibility of the contractor to maintain adequate insurance coverage at all times during the term of the Contract. Failure of the Contractor to maintain coverage shall not relieve it of any contractual responsibility or obligation or liability in general or under the Contract Documents.

The certificates of insurance, including evidence of the required endorsements hereunder or the policies, shall be filed with the City within ten (10) days after the date of the receipt of Notice of Award of the Contract to the Contractor and prior to the start of work. All insurance policies shall require that the insurance company in question provide thirty (30) days written notice prior to modification or cancellation of such insurance. Such notices shall be mailed, certified mail, return receipt requested, to:

City of Joplin - Public Works, 602 S. Main Street, Joplin, MO 64801

Such policies shall name the City as an additional insured, with limits of liability not less than the sovereign immunity limits for Missouri public entities calculated by the Missouri Department of Insurance as of January 1 each calendar year and published annually in the Missouri Register pursuant to Section 537.610, RSMo. (See, http://insurance.mo.gov/industry/sovimmunity.php)

As of January 1, 2017, the minimum coverage for the insurance referred to herein shall be as set out below:

a. Workers' Compensation…. Statutory coverage per RSMo 287.010 et seq

Employer's Liability……. $1,000,000.00

b. Commercial General Liability Insurance, including coverage for Premises, Operations, Products and Completed Operations, Contractual Liability, Broad Form Property Damage, Independent Contractors, Explosion, Collapse, and Underground Property Damage and endorsed for blasting if blasting required. Such coverage shall apply to bodily injury and property damage on an "Occurrence Form Basis" with limits of at least Two Million Seven Hundred Sixty Two Thousand Seven Hundred Eighty Nine and no/100 Dollars ($2,762,789.00) for all claims arising out of a single accident or occurrence and at least Four Hundred Fourteen Thousand Four Hundred Eighteen and no/100 Dollars ($414,418.00) with respect to injuries and/or death of any one person in a single occurrence and an amount not less than at least $1,000,000 for all claims to property arising out of a single occurrence and at least $100,000 to any one owner with respect to damages to property. Contractor agrees that the proceeds of such insurance policy shall first be used to pay any award, damages, costs, and/or attorneys' fees incurred by or assessed against City, its employees, officers and agents, before payment of any award, damages, costs or attorneys' fees of Contractor, its employees, officers or agents. Contractor agrees to cause its insurer to name City as an additional insured on such insurance policy, including the City as an additional insured for coverage under its products-completed operations hazard, and said policy shall be primary and noncontributory.

c. Automobile Liability Insurance covering bodily injury and property damage for owned, non-owned and hired vehicles, with limits of at least Two Million Seven Hundred Sixty Two Thousand Seven Hundred Eighty Nine and no/100 Dollars ($2,762,789.00) for all claims arising out of a single accident or occurrence and at least Four Hundred Fourteen Thousand Four Hundred Eighteen and no/100 Dollars ($414,418.00) with respect to injuries and/or death of any one person in a single accident or occurrence.

d. Owner's and Contractor's Protective Liability Insurance to protect the City, its agents, servants and employees from claims which may arise from the performance of this Contract, with limits of at least Two Million Seven Hundred Sixty Two Thousand Seven Hundred Eighty Nine and no/100 Dollars ($2,762,789.00) for all claims arising out of a single accident or occurrence and at least Four Hundred Fourteen Thousand Four Hundred Eighteen and no/100 Dollars ($414,418.00) with respect to injuries and/or death of any one person in a single accident or occurrence.

The Owner's and Contractor's Protective Liability Insurance must:

(1) Be a separate policy with the named insured being: The City of Joplin, and

(2) Contain an endorsement that disclaims coverage for any claim barred by the doctrines of sovereign immunity or official immunity, except attorney's fees and other litigation costs incurred in defending a claim. Nothing contained in this policy (or this endorsement thereto) shall constitute any waiver of whatever kind of these defenses or sovereign immunity or official immunity for any monetary amount whatsoever.

e. Builders Risk Insurance for contracts involving unoccupied structures. The Contractor shall secure All Risk Builder's Risk Insurance. Unless specifically authorized by the City, the amount of such insurance shall not be less than the total contract price.

f. Subcontracts. In case any or all of this work is sublet, the Contractor shall require the subcontractor to procure and maintain all insurance required in subparagraphs (a), (b) and (c) hereof and in like amounts. Contractor shall require any and all subcontractors with whom it enters into a contract to perform work on this project to protect the City of Joplin through insurance against applicable hazards or risks and shall, upon request of the City, provide evidence of such insurance.

g. Notice. The Contractor and/or subcontractor shall furnish the City prior to beginning the work, the policy as specified in subparagraph (d), and satisfactory proof of carriage of all the insurance required by this contract, with the provision that policies shall not be canceled, modified or non-renewed without thirty (30) days written notice to the City of Joplin.

h. Legislative or Judicial Changes. In the event the scope or extent of the City's tort liability as a governmental entity as described in Section 537.600 through 537.650 RSMo is broadened or increased during the term of this agreement by legislative or judicial action, the City may require Contractor, upon 10 days written notice, to execute a contract addendum whereby the Contractor agrees to provide, at a price not exceeding Contractor's actual increased premium cost, additional liability insurance coverage as the City may require to protect the City from increased tort liability exposure as the result of such legislative or judicial action. Any such additional insurance coverage shall be evidenced by an appropriate certificate of insurance and shall take effect within the time set forth in the addendum.

4. Performance, Labor, and Materials Payment Bond: The Contractor shall furnish a Performance Bond and a Labor and Materials Payment Bond with surety approved by the City and on the forms approved by the City, each bond shall be in the amount of $67,700 (full amount of contract) conditioned upon the full and faithful performance of all major terms and conditions of this contract and payment of all labor and material suppliers. It is further mutually agreed between the parties hereto that if at any time after the execution of this agreement and the surety bond(s) hereto attached for its faithful performance and payment of labor and material suppliers, the City shall deem the surety or sureties upon such bond(s) to be unsatisfactory, or if, for any reason, such bond(s) ceases to be adequate to cover the performance of the work, the Contractor shall, at its expense, within five (5) days after the receipt of notice from the City to do so, furnish an additional bond or bonds, in such form and amount, and with such surety or sureties as shall be satisfactory to the City. In such event no further payment to the Contractor shall be deemed to be due under this contract until such new or additional security for the faithful performance of the work and the payment of labor and material suppliers shall be furnished in a manner and form satisfactory to the City. The corporate surety on any performance or payment bond must be licensed by the State of Missouri and if the required bond exceeds $25,000.00 must be listed in United States Treasury Circular 570.

5. Certification Regarding Disbarment, Eligibility, Indictments, Convictions or Civil Judgements for all Federal Aid Projects: By signing and submitting the bid, the president or authorized official of the bidder, under penalty of perjury under the laws of the USA, shall certify that, except as noted in the exceptions, the company or any person associated therewith in the capacity of owner, partner, director, officer, principal investor, project director, manager, auditor or any position involving the administration of federal funds:
(Reference can be made to "The System for Award Management" website as a helpful resource).

a. Is not currently under suspension, debarment, voluntary exclusion or determination of ineligibility by any federal agency.

b. Has not been suspended, debarred, voluntarily excluded or determined ineligible by any federal agency within the past three years.

c. Does not have a proposed debarment or suspension pending.

d. Has not been indicted, convicted or had a civil judgment rendered against any of the listed parties by a court of competent jurisdiction in any matter involving fraud or official misconduct within the past three years.

5.1 If there are any exceptions, the bidder shall submit the exceptions on company letterhead, signed by the bidder and inserted inside the bid submitted. Exceptions will not necessarily result in denial of award, but will be considered in determining bidder responsibility. For any exception noted, the bidder shall indicate to whom it applies, the initiating agency, and dates of action. Providing false information may result in criminal prosecution or administrative sanctions.

5.2 By signing the contract, the contractor shall further certify that all related subcontracts of $25,000 shall comply with this requirement. This includes all subcontractors, material suppliers and vendors.

6. Contractor's responsibility for subcontractors. The Contractor shall be as fully responsible to the City for the acts and omissions of its subcontractors, and of persons either directly or indirectly employed by them, as Contractor is for the acts and omissions of persons it directly employs. Contractor shall cause appropriate provisions to be inserted in all subcontracts relating to this work, to bind all subcontractors to Contractor by all the terms herein set forth, and insofar as applicable to the work of subcontractors and to give Contractor the same power regarding termination of any subcontract as the City may exercise over Contractor under any provisions of this contract. Nothing contained in this contract shall create any contractual relation between the subcontractor and the City or between any subcontractors.

7. General Independent Contractor Clause. This agreement does not create an employee/employer relationship between the parties. It is the parties' intention that the Contractor will be an independent contractor and not the City's employee for all purposes, including, but not limited to, the application of the Fair Labor Standards Act minimum wage and overtime payments, Federal Insurance Contribution Act, the Social Security Act, the Federal Unemployment Tax Act, the provisions of the Internal Revenue Code, Missouri Revenue and Taxation laws, Missouri Workers' Compensation and Unemployment Insurance laws. The Contractor will retain sole and absolute discretion in the judgment of the manner and means of carrying out the Contractor's activities and responsibilities hereunder. The Contractor agrees that it is a separate and independent enterprise from the public employer, that it has a full opportunity to find other business, that it has made its own investment in its business, and that it will utilize a high level of skill necessary to perform the work. This agreement shall not be construed as creating any joint employment relationship between the Contractor and the City, and the City will not be liable for any obligation incurred by the Contractor, including but not limited to unpaid minimum wages and/or overtime premiums.

8. Liquidated Damages. Time of completion of work by the Contractor is of the essence. Should Contractor, or in the case of default, the surety, fail to complete the work within the time specified in the contract, or within such extra time as may be allowed in accordance with City of Joplin Standard Specifications, Division 0000, General Requirements and Provisions, Section 0400.19, (http://mo-joplin.civicplus.com/DocumentCenter/View/3460) Contractor (or surety) shall be liable to the City in the amount of $100 per day for each and every calendar day that the contract remains uncompleted after the time allowed for completion, as liquidated damages, and not as a penalty, it being stipulated that actual damages to the City and the public arising from Contractor's failure to timely complete the work would be difficult, if not impossible, to ascertain. The amount assessed as liquidated damages may be withheld from any moneys otherwise due to Contractor from the City.

9. Termination. The City reserves the right to terminate this contract by giving at least five (5) days prior written notice to the Contractor, without prejudice to any other rights or remedies of the City should the Contractor be adjudged a bankrupt, or if Contractor should make a general assignment for the benefit of its creditors, or if a receiver should be appointed for Contractor or for any of its property, or if Contractor should persistently or repeatedly refuse or fail to supply enough properly skilled workmen or proper material, or if Contractor should refuse or fail to make prompt payment to any person supplying labor or materials for the work under the contract, or persistently disregard instructions of the City or fail to observe or perform any provisions of the contract.

10. City's Right to Proceed. In the event this contract is terminated pursuant to Paragraph 8, then the City may take over the work and prosecute the same to completion, by contract or otherwise, and Contractor and its sureties shall be liable to the City for any costs over the amount of this contract thereby occasioned by the City. In any such case, the City may take possession of, and utilize in completing the work, such materials, appliances and structures as may be on the work site and are necessary for completion of the work. The foregoing provisions are in addition to, and not in limitation of, the rights of the City under any other provisions of the contract, city ordinances, and state and federal laws.

11. Termination for Convenience of City. The City shall have the right at any time by written notice to Contractor to terminate and cancel this contract, without cause, for the convenience of the City, and Contractor shall immediately stop work. In such event City shall not be liable to Contractor except for payment for actual work performed prior to such notice in an amount proportionate to the completed contract price and for the actual costs of preparations made by Contractor for the performance of the cancelled portions of the contract, including a reasonable allowance of profit applicable to the actual work performed and such preparations. Anticipatory profits and consequential damages shall not be recoverable by Contractor.

12. Guards and Lights. The Contractor agrees that during the performance of said work, adequate barricades, guards and warning signs, lights or devices consistent with the requirements contained in the Manual on Uniform Traffic Control Devices shall be provided by Contractor during construction.

13. Liability and Indemnity.

a. In no event shall the City be liable to the Contractor for special, indirect, or consequential damages, except those caused by the City's gross negligence or willful or wanton misconduct arising out of or in any way connected with a breach of this contract. The maximum liability of the City shall be limited to the amount of money to be paid or received by the City under this contract.

b. The Contractor shall defend, indemnify and save harmless the City, its elected or appointed officials, agents and employees from and against any and all liability, suits, damages, costs (including attorney fees), losses, outlays and expenses from claims in any manner caused by, or allegedly caused by, or arising out of, or connected with, this contract, or the work or any subcontract thereunder (the Contractor hereby assuming full responsibility for relations with subcontractors), including, but not limited to, claims for personal injuries, death, property damage, or for damages from the award of this contract to Contractor, notwithstanding any possible negligence, whether sole or concurrent, on the part of the City, its officials, agents and employees.

c. The Contractor shall indemnify and hold the City harmless from all wages or overtime compensation due any employees in rendering services pursuant to this agreement or any subcontract, including payment of reasonable attorneys' fees and costs in the defense of any claim made under the Fair Labor Standards Act, the Missouri Prevailing Wage Law or any other federal or state law.

d. The indemnification obligations of Contractor hereunder shall not be limited by any limitations as to the amount or type of damages, compensation or benefits payable by or for the Contractor, under any federal or state law, to any person asserting the claim against City, its elected or appointed officials, agents and employees, for which indemnification is sought.

e. The indemnification obligations herein shall not negate, abridge or reduce in any way any additional indemnification rights of the City, its elected or appointed officials, agents and employees, which are otherwise available under statute, or in law or equity.

f. Contractor affirms that it has had the opportunity to recover the costs of the liability insurance required in this agreement in its contract price. Contractor's obligation under this agreement to defend, indemnify, and hold harmless any person from that person's own negligence or wrongdoing is limited to the coverage and limits of the applicable insurance required of the Contractor under this agreement.

g. The Contractor shall indemnify and hold the City harmless for any penalties, fines, fees or costs, including costs of defense, which are charged or assessed by any Federal, state or local agency including, but not limited to, Environmental Protection Agency or Department of Natural Resources.

14. Payment for Labor and Materials. The Contractor agrees and binds itself to pay for all labor done, and for all the materials used in the construction of the work to be completed pursuant to this contract.

15. Payment. The City will pay the Contractor in accordance with the rate set forth in the contract documents on file in the Public Works Department and by this reference made a part hereof, which shall constitute full and complete compensation for the Contractor's work provided hereunder. Such compensation will be paid in progress payments (less five (5) percent retainage), as established by the City, subject to receipt of a requisition for payment and a statement of work provided by the Contractor and agreement by both the City and the Contractor that the Contractor has fully performed the work to be paid for in such progress payments in conformance with the contract. If the City or the architect or engineer determines that a higher rate of retainage is required to ensure performance of the contract, the City may withhold up to ten (10) percent retainage until the work is fully completed and accepted by the City.

16. Contract Documents. The contract documents shall consist of the following:

a. This Contract
b. All Change Orders
c. Bid Plans and Specifications
d. City of Joplin Standard Specifications (Latest Revised Edition)
e. Special Conditions & Provisions
f. Proposal

g. Statement of Bidder's Qualifications
h. Acknowledgment
i. Performance Bond
h. Payment and Material Bond
k. Instructions to Bidders
l. Non-collusion Affidavit
m. Notice to Proceed

Notice to Contractors: This contract, together with the other documents enumerated in this paragraph, forms the contract between the parties. These documents are as fully a part of the contract as if attached hereto or repeated herein. The Contractor agrees to perform all of the work described in the contract documents and to comply with the terms and conditions defined therein for a total sum of Sixty Seven Thousand Seven Hundred and Zero/100 ($67,700.00) dollars, said amount being subject to any approved addenda or change order.

17. Subsurface Conditions. Contractor agrees that information contained in the published reports and public actions of the Missouri Division of Geology and Land Survey shall be conclusive and binding upon the Contractor as to what subsurface conditions at the job site are reasonably anticipated or reasonably foreseeable. Contractor acknowledges and agrees that it shall not be entitled to any adjustment in the Contract Sum or Contract Times for any concealed condition of any nature, including but not limited to unknown physical conditions of an unusual nature which differ materially from those ordinarily found to exist and generally recognized as inherent in construction activities of the character provided for in the Contract Documents, in addition to the information contained in the published reports and public actions of the Missouri Division of Geology and Land Survey. Contractor recognizes that it has assumed the risks of concealed conditions and is being compensated for assuming these risks.

18. Conflict of Interest. In accepting this contract, Contractor certifies that no member or officer of its firm or corporation is an officer or employee of the City of Joplin, Missouri, or any of its boards or agencies, and further that no officer or employee of the City has any financial interest, direct or indirect, in this contract. All applicable federal regulations and provisions of R.S.Mo. Section 105.450 et seq. shall not be violated.

19. Assignment. The Contractor shall not assign any interest in this contract, and shall not transfer any interest in the same (whether by assignment or novation), without prior written consent of the City thereto, provided, however, that claims for money due or to become due to the Contractor from the City under this Contract may be assigned to a bank, trust company, or other financial institution without such approval. Notice of such assignment or transfer shall be furnished in writing promptly to the City and the bond surety. Any such assignment is expressly subject to all rights and remedies of the City under this agreement, including the right to change or delete activities from the Contract or to terminate the same as provided herein, and no such assignment shall require the City to give any notice to any such assignee of any actions which the City may take under this agreement.

20. Nondiscrimination. The Contractor agrees in the performance of this contract not to discriminate on the ground or because of race, creed, color, national origin or ancestry, sex, religion, handicap, age, status as a protected veteran or status as a qualified individual with a disability, or political opinion or affiliation, against any employee of Contractor or applicant for employment and shall include a similar provision in all subcontracts let or awarded hereunder. The parties hereby incorporate the requirements of 41 C.F.R. §§ 60-1.4(a)(7), 29 C.F.R. Part 471, Appendix A to Subpart A, 41 C.F.R. § 60-300.5(a)ii and 41 C.F.R. § 60-741.5(a), if applicable.

a. This contractor and subcontractor shall abide by the requirements of 41 C.F.R. § 60-300.5(a). This regulation prohibits discriminations against qualified protected veterans, and requires affirmative action by covered prime contractors and subcontractors to employ and advance in employment qualified protected veterans.

b. This contractor and subcontractor shall abide by the requirements of 41 C.F.R. § 60-741.5(a). This regulation prohibits discrimination against qualified individuals on the basis of disability, and requires affirmative action by covered prime contractors and subcontractors to employ and advance in employment qualified individuals with disabilities.

21. Nonresident/Foreign Contractors. The Contractor shall procure and maintain during the life of this contract:

a. If the Contractor is a foreign corporation, a certificate of authority to transact business in the State of Missouri from the Secretary of State, unless exempt pursuant to the provisions of Section 351.570 R.S.Mo.

b. A certificate from the Missouri Director of Revenue evidencing compliance with the transient employer financial assurance law, unless exempt pursuant to the provisions of Section 285.230 RSMo.

22. Notices. All notices required or permitted hereinunder and required to be in writing may be given by FAX or by first class mail addressed to City and Contractor at the addresses shown above. The date of delivery of any notice given by mail shall be the date falling on the second full day after the day of its mailing. The date of delivery of notice by FAX transmission shall be deemed to be the date transmission occurs, except where the transmission is not completed by 5:00 p.m. on a regular business day at the terminal of the receiving party, in which case the date of delivery shall be deemed to fall on the next regular business day for the receiving party.

23. Records and Audits. The Contractor shall maintain accounts and records, including personnel, property, and financial records, adequate to identify and account for all costs pertaining to the Contract and such other records as may be deemed necessary by the City to assure proper accounting for all project funds. These records will be made available for audit purposes to the City or any authorized representative, and will be retained for three years after the expiration of this Contract.

24. Authorized Employees. Contractor acknowledges that Section285.530, RSMo, prohibits any business entity or employer from knowingly employing, hiring for employment, or continuing to employ an unauthorized alien to perform work within the State of Missouri. Contractor therefore covenants that is not knowingly in violation of subsection 1 or Section 285.530, RSMo, and that it will not knowingly employ, hire for employment, or continue to employ any unauthorized aliens to perform work on the Project, and that its employees are lawfully to work in the United States.

25. Interest of Contractor and Employees. The Contractor covenants that he/she presently has no interest and shall not acquire interest, direct or indirect, in the study area or any parcels therein or any other interest which would conflict in any manner or degree with the performance of his services hereunder. The Contractor further covenants that in the performance of this Contract, no person having any such interest shall be employed.

26. Interest of Members of a City. No member of the governing body of the City and no other officer, employee, or agent of the City who exercises any functions or responsibilities in connection with the planning and carrying out of the program, shall have any personal financial interest, direct or indirect, in this Contract, and the Contractor shall take appropriate steps to assure compliance.

27. Interest of Other Local Public Officials. No member of the governing body of the locality and no other public official of such locality, who exercises any functions or responsibilities in connection with the planning and carrying out of the program, shall have any personal financial interest, direct or indirect, in this Contract, and the Contractor shall take appropriate steps to assure compliance.

28. Affidavit for Contracts Over $5,000.00. That pursuant to Missouri Revised Statute Sections 285.525 through 285.550, if this contract exceeds the amount of $5,000.00 and Contractor is associated with a business entity, Contractor shall provide an acceptable notarized affidavit stating that the associated business entity is enrolled in and participates in a federal work authorization program with respect to the employees working in connection with the contracted services, and that said business entity does not knowingly employ any person who is an unauthorized alien in connection with the contracted services. Additionally, Contractor must provide documentation for said business entity evidencing current enrollment in a federal work authorization program.

29. City Benefits. The Contractor shall not be entitled to any of the benefits established for the employees of the City nor be covered by the Worker's Compensation Program of the City.

30. Occupational License: The Contractor shall obtain and maintain an occupational license with the City of Joplin, Missouri, if required by city code and any required state or federal license. The cost for this occupational license shall be borne by the Contractor. No contract will be executed by the City until this occupational license has been obtained and that the Contractor is current on any City taxes is verified.

31. Safety Training. Pursuant to Missouri Revised Statute Section 292.675, Contractors and subcontractors who sign a contract to work on public works projects must provide a 10-hour OSHA construction safety program, or similar program approved by the Department of Labor and Industrial Relations, to be completed by their on-site employees within sixty (60) days of beginning work on the construction project. Contractors and subcontractors in violation of this provision will forfeit to the public body $2,500 plus $100 a day for each employee who is employed without training. Public bodies and contractors may withhold/assess these penalties from the payment due to those contractors and subcontractors if found to be in non-compliance.

32. Compliance with Laws. Contractor agrees to comply with all applicable federal, state and local laws or rules and regulations applicable to the provision of services and products hereunder. Contractor affirmatively states that payment of all local, state, and federal taxes and assessments owed by Contractor is current.

33. Entire Agreement. This agreement contains the entire agreement of the parties. No modification, amendment, or waiver of any of the provisions of this agreement shall be effective unless in writing specifically referring hereto, and signed by both parties.

34. Remedies. Except as may be otherwise found in the contract documents, all claims, disputes, counter-claims, and other matters in question between the Owner and Contractor arising out of or related to this agreement or the breech thereof, will be decided by arbitration if the parties hereto mutually agree, or in a court of competent jurisdiction within the state in which the Owner is located.

35. Jurisdiction. This agreement and every question arising hereunder shall be construed or determined according to the laws of the State of Missouri. Should any part of this agreement be adjudicated, venue shall be proper only in the Circuit Court of Jasper County, Missouri.

IN WITNESS WHEREOF, the parties hereto have set their hands and seals on the day and year herein stated.

CONTRACTOR:

CERTIFICATE OF DIRECTOR OF FINANCE

I certify that the expenditure contemplated by this document is within the purpose of the appropriation to which it is to be charged and that there is an unencumbered balance of appropriated and available funds to pay therefor.

By: _____

Printed Name: Bill Warlop

Title: President Home Center Construction, Inc

_____
Leslie Haase, Director of Finance

CITY OF JOPLIN, MISSOURI

APPROVED AS TO FORM

_____
Peter Edwards, City Attorney

By: _____
Nicholas A. Heatherly, Public Works Director

City of **JOPLIN** City Council Agenda Item

Requested Council Meeting Date: March 20, 2017
Council Bill No. 2017-120

Item: Agreement with Missouri American Water in the amount of $39,980.00 for the relocation of water line and fire hydrant at 32nd Street and Central City Road.

Originating Department: Public Works

Attachments: 1) Location Map
2) Contract
3) Council Bill No. 2017-120

Department Head: Nicholas A. Heatherly	Date:
Finance Department: Leslie Haase	Date:
City Attorney: Peter Edward	Date:
City Manager: Sam Anselm	Date:

Recommended Action: Approval of an agreement with Missouri American Water for the relocation of water line and fire hydrant at 32nd Street and Central City Road.

Background: In August of 2014 the voters passed the Renewal of the Capital Improvement Sales Tax Program for an additional 10 years. One of the projects was the widening of 32nd street from Schifferdecker to Central City Road. In July of 2016 the council approved the design and construction of the improved intersection at 32nd and Central City Road. The funding for the intersection work is through the EDA.

Discussion: Attached is the proposed agreement between the City of Joplin and Missouri American Water. In order to make improvements to 32nd and Central City Road it will be necessary to relocate the existing water line and fire hydrant on private easement. The total cost of the work required for the water line and fire hydrant relocations is $39,980.00. This utility relocation work is not eligible for EDA Funds and will be paid by the city Capital Improvement Sales Tax fund.

Recommendation: It is recommended that the proposed agreement with Missouri American Water for relocation of water line & fire hydrant at 32nd & Central City Road be approved. This ordinance is an emergency within the means of Section 2.12 (6) in that said ordinance provides for public improvements and is considered an emergency by the Council and as such shall become effective immediately upon this passage as provided by the Home Rule Charter for the City of Joplin. Specifically, this ordinance approves work to begin immediately in the optimal construction time during the calendar year, and appropriations for this contract have been approved by the 2016-2017 budget.

COUNCIL BILL NO. 2017-120 ORDINANCE NO.

AN ORDINANCE approving the City of Joplin to enter into an agreement with Missouri American Water Company in the amount of $39,980.00 (Thirty Nine Thousand Nine Hundred Eighty and no/100 Dollars) for the relocation of water line and fire hydrant and authorizing the Director of Public Works to execute said Agreement; and containing an emergency clause.

BE IT ORDAINED BY THE COUNCIL OF THE CITY OF JOPLIN, as follows:

Section 1. That the City enter an agreement with Missouri American Water Company in the amount of $39,980.00 (Thirty Nine Thousand Nine Hundred Eighty and no/100 Dollars) for the relocation of water line and fire hydrant.

Section 2. Upon the final approval and acceptance of the contractor's work in substantial conformance with said agreement in writing by the Director of Public Works, and his certification to that effect to the Director of Finance, said contractors shall be paid the sum due there under from Capital Improvements Sales Tax Fund, account number 145-4565-520-8650.

Section 3. This ordinance is an emergency within the means of Section 2.12 (6) in that said ordinance provides for public improvements and is considered an emergency by the Council and as such shall become effective immediately upon this passage as provided by the Home Rule Charter for the City of Joplin. Specifically, this ordinance approves work to begin immediately in the optimal construction time during the calendar year, and appropriations for this contract have been approved by the 2016-2017 budget.

Section 4. Project will be paid from the Capital Improvement Sales Tax Fund.

Passed by the Council of the City of Joplin, Missouri, this _____ day of

_____, 2017, by a _____ vote.

_____

ATTEST: Michael L. Siebert, Mayor

_____

Barbara L. Hogelin, City Clerk

APPROVED AS TO FORM:

_____

Peter C. Edwards, City Attorney

CONTRACT FOR WATER FACILITY RELOCATION

THIS CONTRACT, entered into this _____ day of _____, 2017 by and between MISSOURI-AMERICAN WATER COMPANY, a corporation existing under the laws of the State of Missouri, (hereinafter referred to as "COMPANY"), and the CITY OF JOPLIN, 602 S Main Street Joplin, Missouri 64804 hereinafter referred to as ("CITY"),

WITNESSETH:

WHEREAS, CITY contemplates the location, widening, construction, and/or improvement of 32nd Street in accordance with certain plans titled 32nd Street Central City Roundabout Improvements on file in the office of the CITY; and

WHEREAS, in carrying out the opening, widening, establishment, and improvement of 32nd Street it will be necessary to relocate certain portions of COMPANY'S water facilities now located on the COMPANY'S private easement along 32nd Street in the CITY, and

WHEREAS, COMPANY is willing to accommodate CITY'S needs upon condition that CITY accepts the provisions hereinafter specified and evidences such acceptance by execution hereof in accordance with Section 432.070 RSMo and City Ordinance No. _____.

NOW THEREFORE, in consideration of the mutual covenants contained herein, it is agreed as follows:

1. COMPANY will, as soon as practicable after receiving notice from the CITY, and receipt of payment in full of the estimated cost described in Paragraph 2, furnish all labor, materials, and supervision necessary, and will relocate its said water facilities currently located within the private easement of the COMPANY as shown on the plans marked Exhibit "A" attached hereto and made a part hereof.
2. The estimated cost (Exhibit "B") for this relocation is **$39,980.00** It is agreed that CITY'S obligation toward the cost of this relocation shall be **100%** of the actual costs thereof ("CITY'S OBLIGATION"), which is the percentage of the affected water facilities located within the COMPANY'S private easement. CITY agrees that prior to commencement of the relocation contemplated herein and upon receipt of a statement of cost, it will, or it will direct its agent or assign to promptly pay COMPANY for **100%** of the estimated cost of the relocation as set forth in

Exhibit B, hereinafter referred to as "CITY'S PAYMENT". The failure of any agent or assign of the CITY to promptly pay the COMPANY shall not be a defense and shall not mitigate the duty of the CITY to pay the COMPANY in full.

3. At the conclusion of the relocation work, the COMPANY shall calculate the difference between actual costs and estimated costs, if any. In the event the CITY's pro rata share of the actual costs exceeds CITY'S PAYMENT", the parties will enter into a supplement to this contract that addresses the CITY reimbursing the COMPANY for the additional amount owed. In the event the actual costs are less than CITY'S PAYMENT, the COMPANY will pay CITY its pro rata share of the difference between CITY'S PAYMENT and the actual cost. Payments owed to COMPANY shall be paid within forty five (45) days of receipt of invoice.
4. If any substantial change is made in the original plan and extent of the COMPANY'S relocation as determined by the COMPANY, work on the additional relocation will not be performed until estimated costs have been provided to the CITY. Upon completion of this additional relocation work, CITY will reimburse COMPANY for any incurred costs above the estimated costs set forth in paragraph 2 of the contract that directly result from such change of plans.
5. CITY agrees to furnish COMPANY with all necessary information of the project improvements including surveying and marking the proposed elevation and the right-of-way in order for COMPANY to properly carry out the utility relocation.
6. Upon completion of the relocation provided for herein, COMPANY shall remove all leftover materials and debris resulting from the work and leave the affected public and private rights-of-way in a neat, workman-like condition, free of holes, mounds of dirt, or other objectionable material.
7. This agreement shall inure to the benefit and detriment of the successors and assigns of CITY and COMPANY.

IN WITNESS WHEREOF, the parties hereto have caused this agreement to be executed by their duly authorized officials.

CITY OF JOPLIN, MISSOURI

_____
Mayor

MISSOURI-AMERICAN WATER COMPANY

_____

_____ (Title)

APPROVED AS TO LEGAL FORM:

_____
City Counselor

EXHIBIT "A"

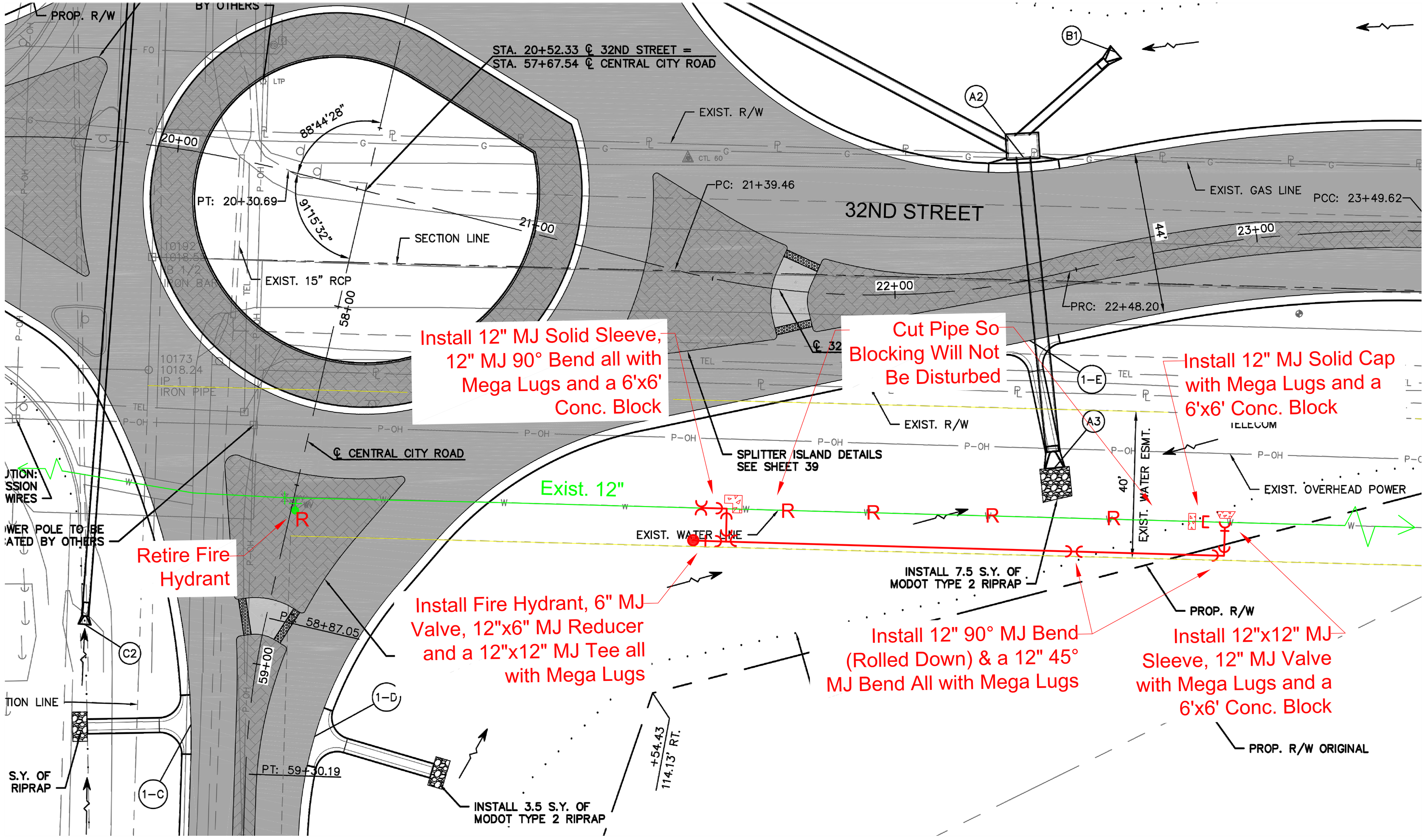

PROJECT: 32 Street and Central City Road Roundabout
12" Water Main Relocation

TITLE: Joplin Missouri

NO.	DATE	INIT.	REVISIONS

MISSOURI AMERICAN WATER
ENGINEERING DEPARTMENT - 727 CRAIG ROAD, ST. LOUIS MISSOURI 63141

ENG. JOB #	E2017-014
W.O.	R17-11D1.17-P-0003
DATE	1/26/17
DRAWN BY	Sam Givens
CHECKED BY	Dave Pruitt
APPROVED BY	Dave Pruitt
MAP GRID	N323-482E
SHEET	1 OF 1

OPERATOR: ######
DWG: Y:\Departmental Folders\Engineering\System Engineering\Projects\Joplin\Distribution_Projects\E 2017 Projects\E2017-014 32nd And Central City Road\POA\POA.dwg

EXHIBIT "B"

The estimated cost to relocate approximately 170' of 12" and one fire hydrant on 32nd Street including contractor cost, inspection, materials and overheads.

Estimated Materials
$8,900.00
Estimated Labor, Inspection & Overheads
$31,080.00
Estimated Total Cost
$39,980.00

COUNCIL BILL NO. 2017-122 ORDINANCE NO.

AN ORDINANCE declaring a public necessity for the acquisition by condemnation proceedings of real property and easements from property described as, All that part of the Southeast Quarter of the Southeast Quarter of Section 13, Township 27 North, Range 33 West, City of Joplin, Jasper County, Missouri, being all that part of the tract of land described in the General Warranty Deed duly recorded in the Jasper County Recorder's Office in Deed Book 1802, at Page 715, for the construction of public road and storm water public improvements near 29th and Arizona Avenue, directing the City Attorney to commence an action to obtain said property; and containing an emergency clause.

WHEREAS, Arizona Property LLC is the legal owner of property described as All that part of the Southeast Quarter of the Southeast Quarter of Section 13, Township 27 North, Range 33 West, City of Joplin, Jasper County, Missouri, being all that part of the tract of land described in the General Warranty Deed duly recorded in the Jasper County Recorder's Office in Deed Book 1802, at Page 715, and;

WHEREAS, in order to make said improvements, it is necessary for the City of Joplin to acquire certain real property and easements described herein for public road and storm water public improvements near 29th and Arizona and;

WHEREAS, the City of Joplin and the owner of the property have been unable to agree upon the proper compensation, if any, to be paid for the lands, properties or rights herein set out.

NOW, THEREFORE, BE IT ORDAINED BY THE COUNCIL OF THE CITY OF JOPLIN, MISSOURI, as follows:

Section 1. That a public necessity exists for the City to acquire real property and easements owned by Arizona Property LLC for the construction of public road and storm water public improvements near 29th and Arizona Avenue according to the plans of the City of Joplin, Jasper County, Missouri and described as follows:

Fee Simple Taking

All that part of the Southeast Quarter of the Southeast Quarter of Section 13, Township 27 North, Range 33 West, City of Joplin, Jasper County, Missouri, being all that part of the tract of land described in the General Warranty Deed duly recorded in the Jasper County Recorder's Office in Deed Book 1802, at Page 715, and being more particularly described as follows:

COMMENCING at the Northwest corner of the Southeast Quarter of the Southeast Quarter of Section 13, Township 27 North, Range 33 West, City of Joplin, Jasper County, Missouri; thence South 01 Degrees 31 Minutes 40 Seconds West along the West line of said Quarter Quarter, a distance of 454.51 feet to the POINT OF BEGINNING; thence departing said West line South 88 Degrees 28 Minutes 20 Seconds East, a distance of 30.00 feet; thence South 01 Degrees 31 Minutes 40 Seconds West, a distance of 165.78 feet; thence North 89 Degrees 53 Minutes 52 Seconds East, a distance of 328.61 feet to a point in the West Right-of-Way line of Arizona Avenue, as now established; thence South 01 Degrees 29 Minutes 55 Seconds West along said West Right-of-Way line, a distance of 9.16 feet to a found 1/2" iron bar; thence continuing along said West Right-of-Way line South 89 Degrees 55 Minutes 45 Seconds West, a distance of 30.32 feet to a found 1/2" iron bar; thence continuing along

said West Right-of-Way line South 01 Degrees 30 Minutes 18 Seconds West, a distance of 50.00 feet to a found 1/2" iron bar, said point being in the South line of the tract of land described in the General Warranty Deed duly recorded in the Jasper County Recorder's Office in Deed Book 1802, at Page 715; thence South 89 Degrees 53 Minutes 52 Seconds West along said South line, a distance of 328.33 feet to the Southwest corner thereof, said point being in said West line of Quarter Quarter; thence North 01 Degrees 31 Minutes 40 Seconds East along said West line, a distance of 225.78 feet to the POINT OF BEGINNING, and containing 24,674 square feet or 0.566 acres, more or less. Subject to easements or other items of record.

Permanent Easement Taking

All that part of the Southeast Quarter of the Southeast Quarter of Section 13, Township 27 North, Range 33 West, City of Joplin, Jasper County, Missouri, being all that part of the tract of land described in the General Warranty Deed duly recorded in the Jasper County Recorder's Office in Deed Book 1802, at Page 715, and being more particularly described as follows:

COMMENCING at the Northwest corner of the Southeast Quarter of the Southeast Quarter of Section 13, Township 27 North, Range 33 West, City of Joplin, Jasper County, Missouri; thence South 01 Degrees 31 Minutes 40 Seconds West along the West line of said Quarter Quarter, a distance of 94.07 feet to the POINT OF BEGINNING, said point being the Northwest corner of the tract of land described in the General Warranty Deed duly recorded in the Jasper County Recorder's Office in Deed Book 1802, at Page 715 (Arizona Tract); thence departing said West line North 89 Degrees 53 Minutes 56 Seconds East along the North line of said Arizona Tract, a distance of 60.02 feet; thence departing said North line South 01 Degrees 31 Minutes 40 Seconds West, a distance of 507.80 feet; thence South 64 Degrees 35 Minutes 36 Seconds East, a distance of 45.04 feet; thence North 89 Degrees 59 Minutes 38 Seconds West, a distance of 71.21 feet; thence North 01 Degrees 31 Minutes 40 Seconds East, a distance of 165.78 feet; thence North 88 Degrees 28 Minutes 20 Seconds West, a distance of 30.00 feet to a point in the West line of said Arizona Tract; thence North 01 Degrees 31 Minutes 40 Seconds East along said West line, a distance of 360.44 feet to the POINT OF BEGINNING, and containing 27,062 square feet or 0.621 acres, more or less. Subject to easements or other items of record.

Temporary Construction Easement

All that part of the Southeast Quarter of the Southeast Quarter of Section 13, Township 27 North, Range 33 West, City of Joplin, Jasper County, Missouri, being a part of the tract of land described in the General Warranty Deed duly recorded in the Jasper County Recorder's Office in Deed Book 1802, at Page 715, and being more particularly described as follows:

COMMENCING at the Northwest corner of the Southeast Quarter of the Southeast Quarter of Section 13, Township 27 North, Range 33 West, City of Joplin, Jasper County, Missouri; thence South 01 Degrees 31 Minutes 40 Seconds West along the West line of said Quarter Quarter, a distance of 621.08 feet; thence departing said West line South 89 Degrees 59 Minutes 38 Seconds East, a distance of 101.22 feet to the POINT OF BEGINNING; thence North 64 Degrees 35 Minutes 36 Seconds West, a distance of 45.04 feet; thence North 01 Degrees 31 Minutes 40 Seconds East, a distance of 235.30 feet; thence South 88 Degrees 39 Minutes 35 Seconds East, a distance of 42.44 feet; thence South 51 Degrees 02 Minutes 45 Seconds East, a distance of 60.82 feet; thence

South 19 Degrees 07 Minutes 24 Seconds East, a distance of 227.90 feet; thence North 89 Degrees 59 Minutes 38 Seconds West, a distance of 129.98 feet to the POINT OF BEGINNING, and containing 30,370 square feet or 0.697 acres, more or less. Subject to easements or other items of record.

Section 2. That the City of Joplin and the owner of the property have been unable to agree upon the proper compensation, if any, to be paid for the lands, properties or rights herein set out.

Section 3. That the City Attorney is hereby instructed to file suit in the court of competent jurisdiction for the purpose of obtaining the properties above described for the uses and purposes herein set out.

Section 4. That the City of Joplin declares that this Ordinance relating to a public improvement, is an emergency within the meaning of Section 2.12 (6) of the HOME RULE CHARTER of the City of Joplin, and as such, shall be in full force and effect immediately from and after its adoption and approval. Specifically, this council bill needs to be approved in order to complete property acquisitions, allowing construction to be completed within funding time limitations.

PASSED BY THE COUNCIL OF THE CITY OF JOPLIN, MISSOURI, this _____ day of _____, 2017 by a _____vote.

_____
Michael L. Seibert, Mayor

ATTEST:

_____
Barbara L. Hogelin, City Clerk

APPROVED AS TO FORM:

_____
Peter C. Edwards, City Attorney

BOUNDARY SURVEY FOR

THE CITY OF JOPLIN

SOUTHEAST QUARTER OR THE SOUTHEAST QUARTER OF .
SECTION 13, TOWNSHIP 27 NORTH, RANGE 33 WEST
CITY OF JOPLIN, JASPER COUNTY, MISSOURI

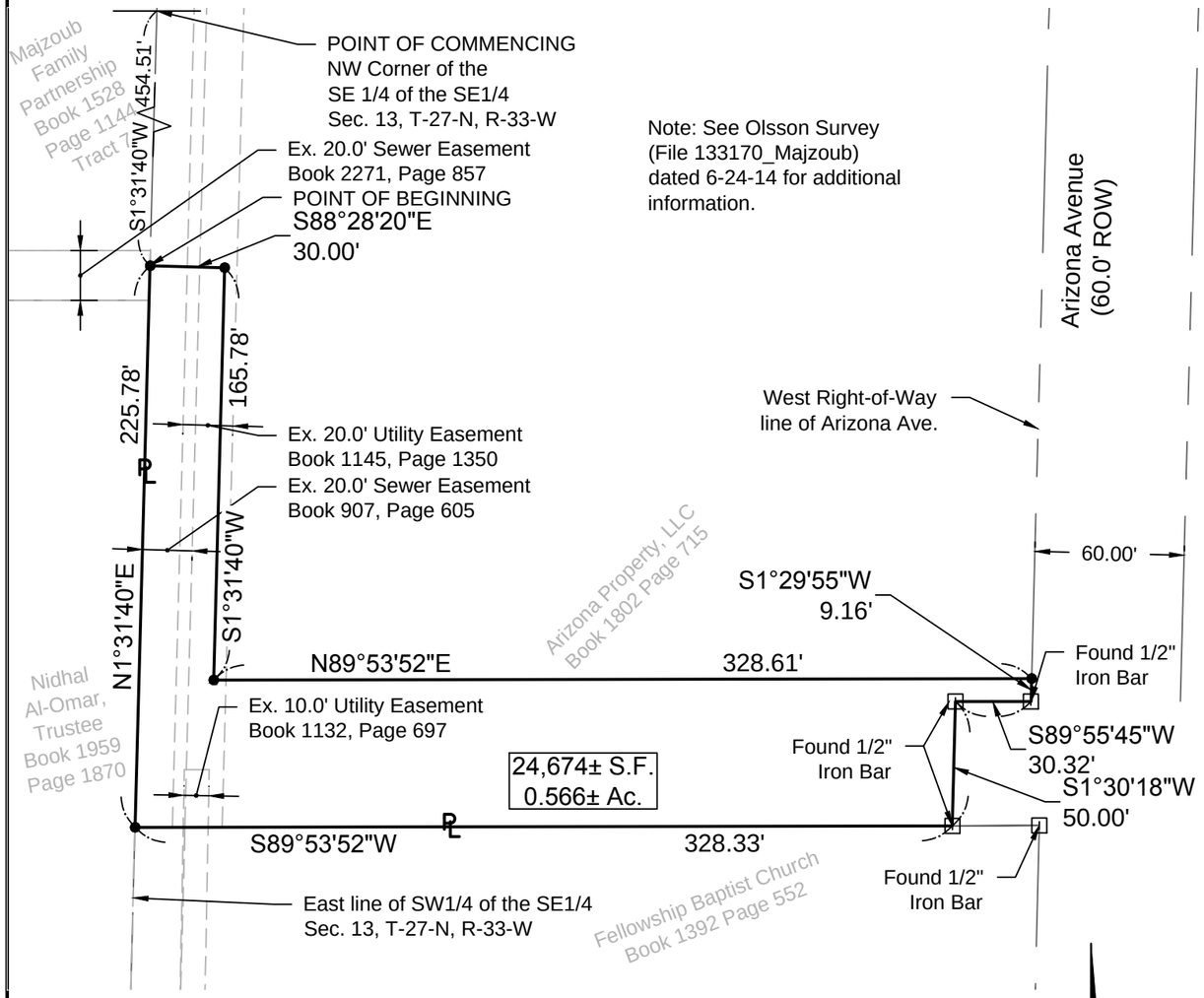

BOUNDARY DESCRIPTION

All that part of the Southeast Quarter of the Southeast Quarter of Section 13, Township 27 North, Range 33 West, City of Joplin, Jasper County, Missouri, being all that part of the tract of land described in the General Warranty Deed duly recorded in the Jasper County Recorder's Office in Deed Book 1802, at Page 715, and being more particularly described as follows:

COMMENCING at the Northwest corner of the Southeast Quarter of the Southeast Quarter of Section 13, Township 27 North, Range 33 West, City of Joplin, Jasper County, Missouri; thence South 01 Degrees 31 Minutes 40 Seconds West along the West line of said Quarter Quarter, a distance of 454.51 feet to the POINT OF BEGINNING; thence departing said West line South 88 Degrees 28 Minutes 20 Seconds East, a distance of 30.00 feet; thence South 01 Degrees 31 Minutes 40 Seconds West, a distance of 165.78 feet; thence North 89 Degrees 53 Minutes 52 Seconds East, a distance of 328.61 feet to a point in the West Right-of-Way line of Arizona Avenue, as now established; thence South 01 Degrees 29 Minutes 55 Seconds West along said West Right-of-Way line, a distance of 9.16 feet to a found 1/2" iron bar; thence continuing along said West Right-of-Way line South 89 Degrees 55 Minutes 45 Seconds West, a distance of 30.32 feet to a found 1/2" iron bar; thence continuing along said West Right-of-Way line South 01 Degrees 30 Minutes 18 Seconds West, a distance of 50.00 feet to a found 1/2" iron bar, said point being in the South line of the tract of land described in the General Warranty Deed duly recorded in the Jasper County Recorder's Office in Deed Book 1802, at Page 715; thence South 89 Degrees 53 Minutes 52 Seconds West along said South line, a distance of 328.33 feet to the Southwest corner thereof, said point being in said West line of Quarter Quarter; thence North 01 Degrees 31 Minutes 40 Seconds East along said West line, a distance of 225.78 feet to the POINT OF BEGINNING, and containing 24,674 square feet or 0.566 acres, more or less. Subject to easements or other items of record.

RECORDING CERTIFICATE

STATE OF MISSOURI SS
COUNTY OF JASPER

I, Donna Grove, Recorder of Deeds, hereby certify this survey was filed in the office of the Clerk and Recorder of Jasper County at _____O'Clock __.M.on the _____day of_____, 2014, in Survey Book _____, at Page _____.

By_____
Donna, Grove, Recorder

CERTIFICATE OF SURVEY AND ACCURACY

Know all men by these presents:

That I, Roddy G. Neff, do hereby certify to the City of Joplin, Missouri, that this survey was prepared under my supervision from an actual survey of the land herein described, prepared by Olsson Associates, Inc., dated July 14, 2014, and signed by Roddy G. Neff, P.L.S. 2671, and that the monuments and lot corner pins shown herein were placed under the personal supervision of Roddy G. Neff, P.L.S. 2671, in accordance with the current "Missouri Minimum Standards For Property Boundary Surveys".

_____ _____
Roddy G. Neff, MO LS 2671 Date
Olsson Associates, MO LC 366
rgneff@olssonassociates.com

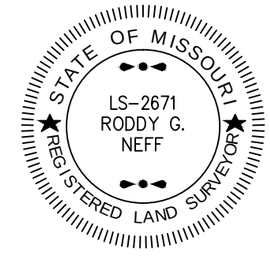

LEGEND
Found Iron Monument (As Noted)
Set 1/2" Rebar w/Plastic Cap, "LC 366"

0' 30' 60' 120'
SCALE IN FEET

BASIS OF BEARINGS
GRID NORTH BASED ON MISSOURI STATE PLANE COORDINATE SYSTEM 1983 WEST ZONE BY USE OF MODOT CONTINUOUSLY OPERATING GNSS RTK NETWORK

N

PREPARED FOR

CITY OF JOPLIN

PREPARED BY

OLSSON ASSOCIATES
550 ST. LOUIS STREET
SPRINGFIELD, MO 65806

PROJECT: 13-3170	BOUNDARY SURVEY FOR THE CITY OF JOPLIN	OLSSON ASSOCIATES	SHEET 1 of 1
DRAWN BY: DRM			
DATE: 07.14.14			

City of **JOPLIN** **City Council Agenda Item**

Requested Council Meeting Date: March 20, 2017
Council Bill No. 2017-122

Item: **Acquisition by Condemnation Proceedings for 29th and Arizona Storm Water Detention Basin Project**

Originating Department: PUBLIC WORKS – ENGINEERING

Attachments: 1) Location Map
2) Council Bill No. 2017-122

Department Head: Nicholas A. Heatherly	Date:
Finance Department: Leslie Haase	Date:
City Attorney: Peter C. Edwards	Date:
City Manager: Samuel L. Anselm	Date:

Recommended Action: Approval of an ordinance declaring a public necessity for the acquisition of real property and easements from Arizona Property LLC, by condemnation proceedings, for the 29th and Arizona Storm Water Detention Basin Project.

Background: In November 2013 the council approved a consulting agreement with Olsson Associates for design services for the 29th and Arizona Regional Detention Basin. The project is part of the 2012 to 2022 storm water sales tax project program. The project was included in the State of Missouri's Rebuild Damaged Infrastructure program, but has since been deleted due to extensive negotiations with one property owner. The improvements will need to be completed under the storm water sales tax program.

At this time the City has been unable to reach an agreement with Arizona Property LLC for the purchase of property and easements at 2902 Arizona Avenue.

Discussion:
Staff has presented a written offer to the listed property owner based on a professional appraisal prepared for the City of Joplin. At this time the offer of compensation has not been accepted. In order to complete the project, staff would like authorization to initiate condemnation proceedings.

Recommendation: Staff recommends this Council Bill be passed on an Emergency basis per Section 2.12 (6) of the Home Rule Charter of the City of Joplin.

City of **JOPLIN** City Council Agenda Item

Requested Council Meeting Date: March 20, 2017
Council Bill No. 2017-123

Item: Work Authorization with Burns & McDonnell Engineering Co, Inc., for Professional Engineering Consulting Services for NPDES Permit Renewal Support.

Originating Department: Public Works – Engineering

Attachments: 1) Work Authorization No. BMC-OC-001
2) Council Bill No. 2017-123

Department Head: Nicholas A. Heatherly
Finance Department: Leslie Haase
City Attorney: Peter C. Edwards
City Manager: Samuel L. Anselm

Recommended Action: Approval of a Work Authorization with Burns & McDonnell Engineering Co, Inc. in the not to exceed amount of $30,000.00 for Professional Engineering Consulting Services for NPDES Permit Renewal Support.

Background: For the City's two wastewater treatment plants (WWTPs), the Missouri Department of Natural Resources (MDNR) issues Operating Permits, in which are established concentration limits for contaminates in the treated waters that are discharged into their respective receiving streams. In the case of the Turkey Creek WWTP, the limits on certain metals have become the focus of concern for the City and for MDNR. Until 2010, the WWTP performed admirably by remaining in substantial compliance with our permit. In 2010 MDNR lowered the discharge limits substantially. Since then, the plant has had difficulty meeting the significantly stricter concentration limits set forth in the Operating Permit. Now that the Turkey Creek WWTP's Operating Permit is up for renewal, City staff seeks revised concentration levels of metals which are more reasonable and affordable to the City's sewer users. To that end, City staff seeks the technical expertise of a team of consultants who can successfully negotiate with MDNR to establish limits of metal contaminants which account for the natural contaminant levels found in Turkey Creek.

In accordance with the City's procurement policy, the City advertised for on-call consulting services in nine categories, including Sanitation Engineering Services. Of the fourteen firms that expressed interest in providing these services, six firms were selected for on-call consulting services using the qualifications based selection method, as required by state statute. Of those selected firms, Burns and McDonnell Engineering Co, Inc. was selected to provide professional engineering services for this initial phase of negotiations with MDNR.

Discussion: This Work Authorization directs Burns and McDonnell to research the issues surrounding the discharge limits for the Turkey Creek WWTP, to advise the City on the correct approach and to attend any initial meetings with the leadership of MDNR. Staff envisions subsequent work authorizations for negotiating with the State.

Recommendation: City staff recommends that approval of a Work Authorization with Burns & McDonnell Engineering Co, Inc. for the not to exceed amount of $30,000.00 for Professional Engineering Consulting Services for NPDES Permit Renewal Support be approved on an emergency basis per Section 2.12 (6) of the Joplin City Charter.

CITY		ENGINEER	
CITY OF JOPLIN **602 S. MAIN STREET** **JOPLIN, MO 64801**		Name: Burns & McDonnell Engineering Company, Inc. Address: 9400 Ward Parkway, Kansas City, MO 64114	
Attention: Mr. Chris Parker, P.E.		Attention: Mr. Jeff Barnard, P.E.	
Department: Public Works - Engineering		Phone: 816-728-9058	Fax: 314-682-1600
Phone: 417-624-0820	Fax: 417-625-4738		

WORK AUTHORIZATION NUMBER BMC-OC-001
TO AGREEMENT FOR PROFESSIONAL ENGINEERING CONSULTING SERVICES

City and Engineer agree to amend their Agreement for Professional Engineering Consulting Services to include a scope of work and fees for engineering services, by adding the following terms to their Agreement.

1. **Services**. The City agrees to engage the services of the Engineer and the Engineer agrees to perform the services hereinafter set forth in connection with projects described in ***Exhibit A***.

2. **Addition to Services**. The City may add to the Engineer services or delete therefrom activities of a similar nature to those set forth in ***Exhibit A***, provided that the total cost of such work does not exceed the total cost allowance as specified in Paragraph 5 hereof. The Engineer shall undertake such changed activities only upon the direction of the City. All such directives and changes shall be in written form and prepared and approved by the City and shall be accepted and countersigned by the Engineer.

3. **Term**. The services of the Engineer shall commence as soon as practicable after the execution of this contract, unless otherwise directed in writing, and shall be undertaken and completed in such sequence as to assure their expeditious completion in the light of the purposes of the contract, but in any event, all of the services required hereunder shall be completed as set forth in the schedule for the project which is attached hereto as ***Exhibit A***.

4. **Costs not to Exceed**. The City of Joplin is limited by law with respect to the amount of money it can pay. Therefore, the City has established a fixed sum for this contract, which cannot be exceeded unless this contract is amended. The Engineer providing services hereunder shall be required to keep track of the amount of hours billable under this contract at all times; and any work in excess of the fixed sum shall not be eligible for payment. The Engineer shall notify the City if Engineer anticipates that the contract amount may be exceeded, in order to determine whether or not the City is prepared to increase the total compensation. The Engineer shall establish a billing system showing the amount of money remaining on the contract, which shall be shown in each monthly billing.

5. **Payment**.

a. **Conditioned upon acceptable performance**. The City agrees to pay the Engineer in accordance with the terms set forth in ***Exhibit A***, which shall constitute complete compensation for all services to be rendered under this contract; provided, that where payments are to be made periodically to Engineer for services rendered under this contract, the City expressly reserves the right to disapprove in whole or in part a request for payment where the services rendered during the period for which payment is claimed are not performed in a timely and satisfactory manner in accordance with the schedule and description of services set forth in ***Exhibit A***.

b. **Total compensation not to exceed**. It is expressly understood that in no event will the total compensation and reimbursement to be paid to the Engineer under the terms of this work Authorization Number BMC-OC-001 exceed the sum of Thirty Thousand Dollars ($30,000.00).

6. **Insurance**. Without limiting any of the other obligations or liabilities of the Engineer, the Engineer shall secure and maintain at its own cost and expense, throughout the duration of this Contract and until the work is completed and accepted by the City of Joplin, insurance of such types and in such amounts as may be necessary to protect it and the interest of the City of Joplin against all hazards or risks of loss as hereunder specified or which may arise out of the performance of the Contract Documents. The form and

Draft

limits of such insurance, together with the underwriter thereof in each case, are subject to approval by the City of Joplin. Regardless of such approval, it shall be the responsibility of the Engineer to maintain adequate insurance coverage at all times during the term of the Contract. Failure of the Engineer to maintain coverage shall not relieve it of any contractual responsibility or obligation or liability under the Contract Documents.

The certificates of insurance, including evidence of the required endorsements hereunder of the policies, shall be filed with the City at the time that this contract is signed by the Engineer. All insurance policies shall provide thirty (30) days written notice to be given by the insurance company in question prior to modification or cancellation of such insurance. Such notices shall be mailed, certified mail, return receipt requested, to:

City of Joplin - Public Works, 602 S. Main, Joplin, MO 64801; and

Such policies shall name the City as an additional insured with limits of liability not less than the sovereign immunity limits for Missouri public entities calculated by the Missouri Department of Insurance as of January 1 each calendar year and published annually in the Missouri Register pursuant to Section 537.610, RSMo.
(See, http://insurance.mo.gov/industry/sovimmunity.php).

As of January 1, 2017, the minimum coverage for the insurance referred to herein shall be as set out below:

a. Workers' Compensation….Statutory coverage per RSMo 287.010 et seq.
Employer's Liability……. $1,000,000.00

b. Commercial General Liability Insurance, including coverage for Contractual Liability and Independent Contractors Liability. Such coverage shall apply to bodily injury and property damage on an "Occurrence Form Basis" with limits of at least Two Million Seven Hundred Sixty Two Thousand Seven Hundred Eighty-Nine and no/100 Dollars ($2,762,789.00) for all claims arising out of a single accident or occurrence and at least Four Hundred Fourteen Thousand Four Hundred Eighteen and no/100 Dollars ($414,418.00) with respect to injuries and/or death of any one person in a single occurrence and an amount not less than at least $1,000,000 for all claims to property arising out of a single occurrence and at least $100,000 to any one owner with respect to damages to property. Engineer agrees that the proceeds of such insurance policy shall first be used to pay any award, damages, costs, and/or attorney's fees incurred by or accessed against City, its employees, officers and agents, before payment of any award, damages, costs or attorney's fees of Engineer, its employees, officers or agents. Engineer agrees to cause its insurer to name City as an additional insured on such insurance policy, including the City as an additional insured for coverage under its products-completed operations hazard, and said policy shall be primary and noncontributory.

c. Automobile Liability Insurance covering bodily injury and property damage for owned, non-owned and hired vehicles, with limits of at least Two Million Seven Hundred Sixty Two Thousand Seven Hundred Eighty-Nine and no/100 Dollars ($2,762,789.00) for all claims arising out of a single accident or occurrence and at least Four Hundred Fourteen Thousand Four Hundred Eighteen and no/100 Dollars ($414,418.00) with respect to injuries and/or death of any one person in a single accident or occurrence.

d. Errors and Omissions Insurance. The Engineer shall maintain a professional liability insurance policy in the amount of $1,000,000.00. This policy shall remain in full force and effect for a period of one year after completion and acceptance by the City of the construction of the project.

e. Subcontracts. In case any or all of this work is sublet, the Engineer shall require the subcontractor to procure and maintain all insurance required in subparagraphs (A), (B) and (C) hereof and in like amounts. Engineer shall require any and all subcontractors with whom it enters into a contract to perform work on this project to protect the City of Joplin through insurance against applicable hazards or risks and shall, upon request of the City, provide evidence of such insurance.

f. Notice. The Engineer and/or subcontractor shall furnish the City prior to beginning the work satisfactory proof of carriage of all the insurance required by this contract, with the provision that policies shall not be canceled, modified or non-renewed without thirty (30) days written notice to the City of Joplin.

g. Legislative or Judicial Changes. In the event the scope or extent of the City's tort liability as a governmental entity as described in Section 537.600 through 537.650 RSMo is broadened or increased during the term of this agreement by legislative or judicial action, the City may require Engineer, upon 10 days written notice, to execute a contract addendum whereby the Engineer

agrees to provide, at a price not exceeding Engineer's actual increased premium cost, additional liability insurance coverage as the City may require to protect the City from increased tort liability exposure as the result of such legislative or judicial action. Any such additional insurance coverage shall be evidenced by an appropriate certificate of insurance and shall take effect within the time set forth in the addendum.

7. All other terms and conditions of the original Agreement shall remain in effect.

IN WITNESS WHEREOF, the parties hereto have set their hands and seals on the day and year herein stated.

Draft

REVIEWED FOR APPROVAL

Chris Parker, Sanitary Sewer Engineer

CERTIFICATE OF DIRECTOR OF FINANCE

I certify that the expenditure contemplated by this document is within the purpose of the appropriation to which it is to be charged and that there is an unencumbered balance of appropriated and available funds to pay therefore.

Leslie Haase, Director of Finance

APPROVED AS TO FORM

Peter Edwards, City Attorney

Engineer: Burns & McDonnell Engineering Co, Inc.

By: _____

Printed Name: Ron Coker, P.E.

Title: Senior Vice President, Water

Date: _____

CITY OF JOPLIN, MISSOURI

By: _____
Nicholas A. Heatherly, P.E.
Public Works Director

Date: _____

Draft

Exhibit A - TABLE OF CONTENTS

Engineering Services Agreement 6-8

Attachment Number One to Exhibit A 9-12

Services 9-12

Terms 12

Payment/Estimated Fee 12

Attachment Number Two to Exhibit A 13

Rate Schedule 13

Draft

Engineering Services Agreement

Article 1 of the Agreement is supplemented to include the following agreement of the parties.

Engineer shall provide Basic and Additional Services as set forth below.

PART 1 – BASIC SERVICES *All deliverables referred to in the agreement shall also be provided in an electronic format to be specified by the City.*

A1.01 *Conceptual Phase*

A. Engineer shall:

1. Consult with Owner to define and clarify Owner's requirements for the Project, including design objectives and constraints, space, capacity and performance requirements, flexibility, and expandability, and any budgetary limitations, and identify available data, information, reports, facilities plans, and site evaluations.

   If Owner has already identified one or more potential solutions to meet its Project requirements, then proceed with the study and evaluation of such potential solutions. Options will be discussed and agreed to by Engineer at scoping meeting.

2. Identify potential solution(s) to meet Owner's Project requirements, as needed.

3. Study and evaluate the potential solution(s) to meet Owner's Project requirements.

4. Visit the Site, or potential Project sites, to review existing conditions and facilities, unless such visits are not necessary or applicable to meeting the objectives of the Study and Report Phase.

5. Advise Owner of any need for Owner to obtain, furnish, or otherwise make available to Engineer additional Project-related data and information, for Engineer's use in the study and evaluation of potential solution(s) to Owner's Project requirements, and preparation of a related report.

6. After consultation with Owner, recommend to Owner the solution(s) which in Engineer's judgment meet Owner's requirements for the Project.

7. Identify, consult with, and analyze requirements of governmental authorities having jurisdiction to approve the portions of the Project to be designed or specified by Engineer, including but not limited to mitigating measures identified in an environmental assessment for the Project.

8. Prepare a conceptual report (the "Report") which will, as appropriate, contain schematic layouts, sketches, and conceptual design criteria with appropriate exhibits to indicate the agreed-to requirements, considerations involved, and

Draft

Engineer's recommended solution(s). For each recommended solution Engineer will provide the following, which will be separately itemized: opinion of probable Construction Cost; proposed allowances for contingencies; the estimated total costs of design, professional, and related services to be provided by Engineer and its Consultants; and, on the basis of information furnished by Owner, a tabulation of other items and services included within the definition of Total Project Costs.

9. Advise Owner of any need for Owner to provide data or services for use in Project design, or in preparation for Contractor selection and construction.

10. When mutually agreed, assist Owner in evaluating the possible use of building information modeling; civil integrated management; geotechnical baselining of subsurface site conditions; innovative design, contracting, or procurement strategies; or other strategies, technologies, or techniques for assisting in the design, construction, and operation of Owner's facilities.

11. If requested to do so by Owner, assist Owner in identifying opportunities for enhancing the sustainability of the Project, and pursuant to Owner's instructions plan for the inclusion of sustainable features in the design.

12. Develop a scope of work and survey limits for any topographic and other surveys necessary for design.

13. Perform or provide the following other Study and Report Phase tasks or deliverables:

14. Furnish 6 review copies of the Report and any other Study and Report Phase deliverables to Owner by the due date and review by phone or in person with Owner.

15. Revise the Report and any other Study and Report Phase deliverables in response to Owner's comments, as appropriate, and furnish 6 copies of the revised Report and any other Study and Report Phase deliverables to the Owner by the agreed upon due date.

B. Engineer's services under the Study and Report Phase will be considered complete on the date when Engineer has delivered to Owner the revised Report and any other Study and Report Phase deliverables.

C. Billing/Payment Processing

1. Request for payment may be submitted at appropriate intervals during the contract. Application for payment must include a detailed breakdown of deliverables completed as well as specific tasks or percentages of specific tasks completed. Payment schedule will be at the approval of the city.

Draft

A1.02 Preliminary Design Phase - (30 percent plans)

Not included with scope of services.

A1.03 *Utility Requirements*

Not included with scope of services.

A1.04 Surveying Services – General

Not included with scope of services.

A1.05 Right of Way Plan Phase – 60 percent plans

Not included with scope of services.

A1.06 Final Design Phase

Not included with scope of services.

A1.07 Bidding Phase

Not included with scope of services.

A1.08 Construction Phase

Not included with scope of services.

A1.09 Post-Construction Phase

Not included with scope of services.

PART 2 – ADDITIONAL SERVICES

A2.01 *Additional Services Requiring Owner's Written Authorization*

A. If authorized in writing by Owner, Engineer shall provide Additional Services of the types listed below. These services are not included as part of Basic Services and will be paid for by Owner as indicated.

1. Preparation of applications and supporting documents (in addition to those furnished under Basic Services) for private or governmental grants, loans, or advances in connection with the Project; preparation or review of environmental assessments and impact statements; review and evaluation of the effects on the design requirements for the Project of any such statements and documents prepared by others; and assistance in obtaining approvals of authorities having jurisdiction over the anticipated environmental impact of the Project.

2. Undertaking investigations and studies including, but not limited to:

a. Detailed consideration of operations, maintenance, and overhead expenses.

Draft

ATTACHMENT NUMBER ONE
EXHIBIT A TO WORK AUTHORIZATION NUMBER BMC-OC-001 TO AGREEMENT
FOR PROFESSIONAL ENGINEERING CONSULTING SERVICES
(Between the City of Joplin, Missouri and Burns & McDonnell Engineering, Inc.)

1. SCOPE OF SERVICES

ENGINEER shall provide the City of Joplin, Missouri (OWNER) with the following scope of services:

1.1. INTERNAL STRATEGIC PLANNING

ENGINEER will provide support and participate in up to two (2) strategy planning meetings with OWNER staff, legal counsel, City Administrator, and elected officials as requested in advance of and during National Pollution Discharge Elimination System (NPDES) negotiations for the Turkey Creek Wastewater Treatment Facility with the Missouri Department of Natural Resources (MDNR). ENGINEER will work collaboratively with OWNER to develop a strategy to reduce the impact of pending and currently imposed metals limits on the Turkey Creek Wastewater Treatment Facility.

1.2. REGULATORY AGENCY MEETINGS

ENGINEER will provide NPDES negotiation support to OWNER and respond to regulatory agency requests for additional information during review of the NPDES permit by MDNR, as requested by OWNER. Activities will include the preparation of technical submittals and briefing documents, participation in up to two (2) negotiation meetings to provide technical support and assistance, and providing clarification as requested by OWNER.

1.3. REVIEW OF AVAILABLE INFORMATION

OWNER will make available the following for ENGINEER review:

- NPDES Permit for the Turkey Creek Wastewater Treatment Facility and up to three (3) permits from facilities in the regions
- NPDES Permit Fact Sheets with Appendices
- WWTP Discharge Monitoring Reports
- Industrial Pretreatment Program documentation, including local limits determination
- Any discharge stream water quality monitoring results (upstream and downstream of WWTP discharge)
- Any whole effluent toxicity (WET) testing results
- Applicable water quality standards and total maximum daily load studies (TMDL's)

ENGINEER will review and provide comment to the OWNER in regard to the applicability of information provided in the above documents as the information may directly pertain to the NPDES negotiations.

DRAFT

2. TERMS

2.1. Schedule: The services of the ENGINEER shall commence as soon as practicable after execution of this authorization, unless otherwise directed in writing, and shall be undertaken and completed in the light of the purposes of the authorization, however, given the nature of NPDES permit negotiations a firm timeline for completion is not included herein.

2.2. ENGINEER will be compensated on a time and materials basis, but shall not exceed the total compensation amount unless approved in writing by the OWNER. Negotiations may not be complete within the compensation amount; the ENGINEER will apprise the OWNER of the budgetary status on a monthly basis and when the billed amount has reached eighty percent (80%) of the not to exceed amount.

3. PAYMENT

3.1. Payment to ENGINEER shall be at the hourly labor rates and non-labor rates set forth in the attachment Number Two to Exhibit A: "Schedule of Hourly Rates and Expenses"; with a total compensation not to exceed amount of $30,000, as set forth in Work Authorization Number BMC-OC-001 to the Agreement for Professional Engineering Consulting Services, Section 5.b.

DRAFT

Attachment Number Two

Schedule of Hourly Rates and Expenses

Position Classification	Classification Level	Hourly Billing Rate
General Office*	5	$59.00
Technician*	6	$76.00
Assistant*	7	$87.00
	8	$119.00
	9	$139.00
Staff*	10	$152.00
	11	$168.00
Senior	12	$183.00
	13	$203.00
Associate	14	$213.00
	15	$223.00
	16	$227.00
	17	$232.00

Unit Cost Rates

Description	Unit Cost
Flow Meter Installation	$450.00/each
Flow Monitoring (minimum 5 meters)	$65.00/meter-day
Rain Gauge Monitoring	$15.00/gauge-day

NOTES:

1. Position classifications listed above refer to the firm's internal classification system for employee compensation. For example, "Associate", "Senior", etc., refer to such positions as "Associate Engineer", "Senior Architect", etc.

2. For any nonexempt personnel in positions marked with an asterisk (*), overtime will be billed at 1.5 times the hourly labor billing rates shown.

3. Project time spent by corporate officers will be billed at Level 17 rate plus 25 percent.

4. For outside expenses incurred by Burns & McDonnell, such as authorized travel and subsistence, and for services rendered by others such as subcontractors, the client shall pay the cost to Burns & McDonnell plus 10%.

5. Monthly invoices will be submitted for payment covering services and expenses during the preceding month. Invoices are due upon receipt. A late payment charge of 1.5% per month will be added to all amounts not paid within 30 days of the invoice date.

6. The services of contract/agency personnel shall be billed to Owner according to the rate sheet as if such contract/agency personnel is a direct employee of Burns & McDonnell.

7. The rates shown above are effective for services through December 31, 2017, and are subject to revision thereafter.

COUNCIL BILL NO. 2017-123 ORDINANCE NO.

AN ORDINANCE approving a Work Authorization with Burns & McDonnell Engineering Co, Inc. in the not to exceed amount of Thirty Thousand DOLLARS and 00/100 ($30,000.00) for Professional Engineering Consulting Services for NPDES Permit Renewal Support and containing an emergency clause.

BE IT ORDAINED BY THE COUNCIL OF THE CITY OF JOPLIN, MISSOURI as follows:

Section 1. Approval of a Work Authorization with Burns & McDonnell Engineering Co, Inc in the not to exceed amount of Thirty Thousand DOLLARS and 00/100 ($30,000.00) for Professional Engineering Consulting Services for NPDES Permit Renewal Support in the City of Joplin, Jasper County.

Section 2. Upon the final approval and acceptance of the consultant's work under said contract, in substantial conformance with the attached exhibits, in writing by the Director of Public Works, and his certification to that effect to the Director of Finance, said consultant shall be paid the sum due them.

Section 3. That the Director of Public Works is hereby authorized to enter into an Agreement on behalf of the City of Joplin with Burns & McDonnell Engineering Co, Inc.

Section 4. This ordinance is an emergency within the means of Section 2.12 (6) in that said ordinance provides for public improvements and is considered an emergency by the Council and as such shall become effective immediately upon this passage as provided by the Home Rule Charter for the City of Joplin. Specifically, this ordinance approves design to begin immediately in the optimal time during the calendar year, and appropriations for this contract have been approved by the 2016-2017 budget, Account Number 415-4542-540-8680.

Passed by the Council of the City of Joplin, Missouri, this _____ day of

_____, 2017 by a _____ vote.

_____

ATTEST: Michael L. Seibert, Mayor

_____

Barbara L. Hogelin, City Clerk

APPROVED AS TO FORM:

_____

Peter C. Edwards, City Attorney

Section 1 - Project Information

Project:

Joplin Public Library
Furniture Bid Package
1901 E. 20th Street
Joplin, Missouri 64801

Designer/Specifier:

OPN Architects, Inc.
Contact: Mindy Sorg
200 Fifth Avenue SE, Suite 201
Cedar Rapids, Iowa 52401
Phone: 319.363.6018
Email: msorg@opnarchitects.com

User:

Joplin Public Library
Contact: Jacque Gage
Phone: 417-623-7953
Email: jgage@joplinpubliclibrary.org

Owners Representative:

CBC Real Estate Group, LLC
Contact: Michelle Kaiser
Address: 4706 Broadway, Suite 240 | Kansas City, Missouri 64112
Phone: 816-285-9558 | 913-233-6611
Email: mkaiser@cbcrealestategroup.com

Owner:

The City of Joplin
Attention: Tony W. Robyn
602 S Main St,
4th Floor Planning
Joplin, Missouri 64801
Phone: 417-624-0820 x541

End of Project Information Section

Section 2 – Instructions to Bidders

A. Three (3) copies of the Bids shall be provided on the form(s) attached, shall be signed by the principal of vendor, and shall be sealed in an envelope and marked:

EDA #: 05-79-05345
Joplin Public Library
Furniture Bid Package

Three (3) copies of the Bid must be submitted with EDA# identified on outside of envelope by 11 am on March 8, 2017.

(2) Bids are to be received by:
City of Joplin
Attention: Tony W. Robyn
1901 E. 20th Street
4th Floor Planning
Joplin, Missouri 64801

(1) Bid to be received by:
OPN Architects
Mindy Sorg
200 5th Avenue SE Suite 201
Cedar Rapids, Iowa 52401

B. Bidders shall carefully read the General Conditions and Supplemental Conditions. In submitting bids, bidders agree to the General Conditions and Supplemental Conditions without exception, and agree that these Conditions form a part thereof.

C. The City of Joplin will make awards on the basis of low and/or qualified bid for each section, but this does not exclude several sections being awarded to one bidder. Bidders should complete the section on which they are bidding in its entirety, including total price, freight, delivery and installation. The City of Joplin will make the award deemed to be in its best interest. All items, within vendor package, must be bid in order for the bid to be considered.

D. Bidders shall submit bids on items exactly as specified. Whenever a material, article, or piece of equipment is identified in the Specification Documents by reference to manufacturers' or vendors' names, trade names, catalogue numbers, etc., it is intended merely to establish a standard. Any material, article, or equipment of other manufacturers and vendors that will perform adequately the duties imposed by the design intent will be considered equally acceptable provided the material, article, or equipment so proposed is, in the opinion of the Designer/Specifier, of equal substance and function. Bidders shall submit a completed Alternate Form will each Alternate to be considered. However, such substitution material, article, or equipment shall not be purchased or installed by the Vendor without the Designer/Owners Representative written approval through completion of the Product Evaluation Criteria Form.

E. Bidders shall NOT contact the City of Joplin or Joplin Public Library. All questions to be submitted via email to OPN Architects, Mindy Sorg msorg@opnarchitects.com. All questions submitted will be answered via Addendum.

F. Final Bids shall be reviewed by the City and OPN Architects at a public bid opening on 11 am on March 8, 2017. Final Bids and Vendor selections will be posted at a later date on the Joplin city website.

G. Lump sum totals for each section of the Bid shall be indicated in accordance with the Proposal for Furniture letter format included in Section 5. Bidders must also include an itemized price list showing each product with unit prices, discounts, and extensions as indicated on the Furniture Bid Form.

H. All prices must be Freight on Board (F.O.B.) to the identified job delivery site.

I. In the event of delay of delivery of furniture, and if storage is required, the Owner will pay 50% of invoice value of furniture, not including installation costs, when proof of arrival, Vendor's inspection, storage and certificates of storage have been delivered to Owner.

J. The Owner reserves the right to accept or reject any or all quotes, to waive irregularities or technicalities in any quote, and to accept any quote which the Owner deems to be in its best interest.

K. The Owner will make awards on the basis of low and qualified bid. The City of Joplin will make the award deemed in its best interest. All items to be included in the proposal must be included for the bid to be considered.

L. Upon award of the contract, the selected Vendor shall provide insurance certificate to the Owner of complete and current liability insurance to cover all materials and equipment, Vendor's employees while on the job site, and damages to Owner's properties during delivery, installation and clean-up. The Insurance coverage shall be subject to approval of the Owner, as to adequacy of protection. In the event that the owner requires additional coverage, the Vendor shall be reimbursed, by owner, for the cost of additional coverage required for this package.

M. The Owner reserves the right to order additional specified items for this project at the originally quoted prices for a period of (120) days after the final furniture installation date.

End of Instructions to Bidders Section

Joplin Public Library

FURNITURE SPECIFICATIONS

Joplin Public Library

OPN PROJECT NO: 14289000
EDA PROJECT NO: 05-79-05345
JOPLIN, MISSOURI
ISSUE DATE: 01/27/17 - SECTIONS TO REBID



OPN ARCHITECTS

SDA ARCHITECTS

Joplin Public Library

End Panels + Canopy Tops

OPN ARCHITECTS

Joplin Public Library

CT
ITEM CODE

Joplin Public Library

PROJECT NO: 14289000
JOPLIN, MISSOURI
ISSUE DATE: 02/15/2017

Canopy Tops

ITEM INFORMATION:

Type Mark	Count	Length	Width	Location
CT-1	8	108"	22.5"	Lobby Shelving
CT-2	2	Custom Curve	Custom Curve	Children's Collection - Family Place
CT-3	3	Custom Curve	Custom Curve	Children's Collection - Juvenile

General Notes:

1. Canopy top lengths and widths are general. Coordinate "fit" of canopy tops with selected shelving manufacturer.

2. All canopy tops shall be laminate, Nevamar Chalk White or Equal, with a PVC edge banding.

OPN ARCHITECTS

Joplin Public Library

EP
ITEM CODE

Joplin Public Library

PROJECT NO: 14289000
JOPLIN, MISSOURI
ISSUE DATE: 02/15/2017

End Panels

ITEM INFORMATION:

Type Mark	Count	Height	Width	Location
EP-1	8	50"	34"	Children's Early Learners
EP-2	38	50"	22.5"	Children's Audio/DVD, Children's Easy Readers, Children's Curved Shelving, Lobby Mobile Shelving, Print Reference
EP-3	30	62"	22.5"	Children's Juvenile
EP-4	3	50"	26.5"	Children's Curved Shelving
EP-5	114	68"	22.5"	Local History, Adult Large Print, Adult Fiction, Post, Adult Audio, Teen, Adult DVD
EP-6	40	68"	26.5"	Periodical Shelving, Adult Non-Fiction
EP-7	6	68"	12.5"	SF Newspaper Display, SF Adult Fiction
EP-8	4	68"	14.5"	SF Adult Non-Fiction

General Notes:

1. End panel heights and widths are general. Coordinate "fit" of end panels with selected shelving manufacturer for specific measurements on end panels.

2. Contractor shall submit a full scale mockup of an end panel for designer approval. Contractor shall coordinate with the shelving manufacturer to get associated shelving end channel pieces in order to show accurate installation.

OPN ARCHITECTS

Joplin Public Library

End Panels 1 Elevations

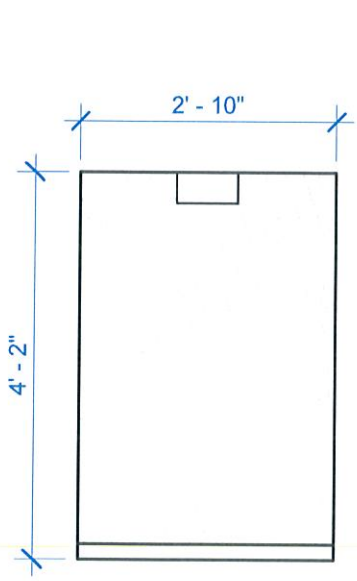

EP-1

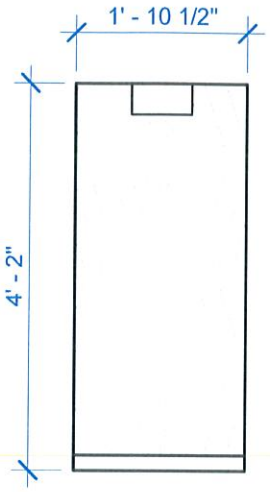

EP-2

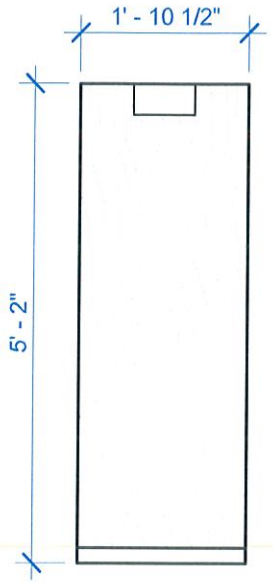

EP-3

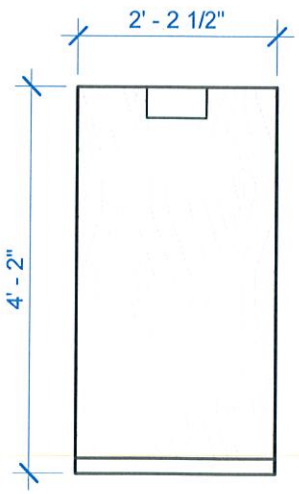

EP-4

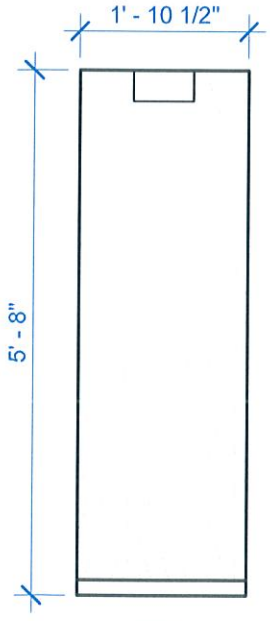

EP-5

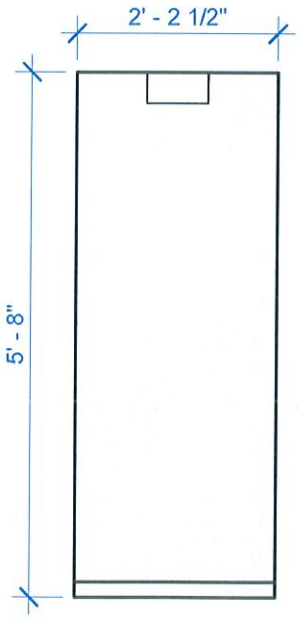

EP-6

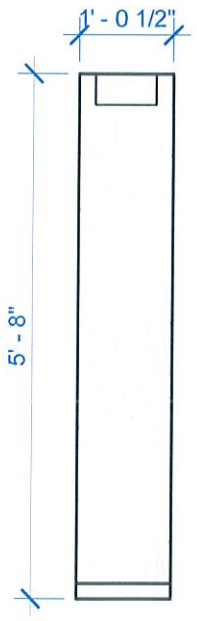

EP-7

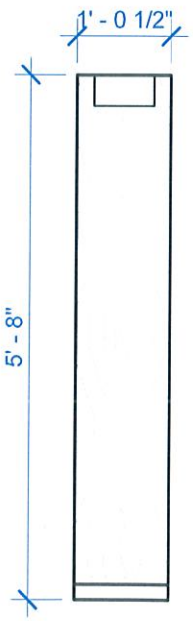

EP-8

1 END PANEL ELEVATIONS

1/2" = 1'-0"

OPN ARCHITECTS

Joplin Public Library

End Panels 2
Details

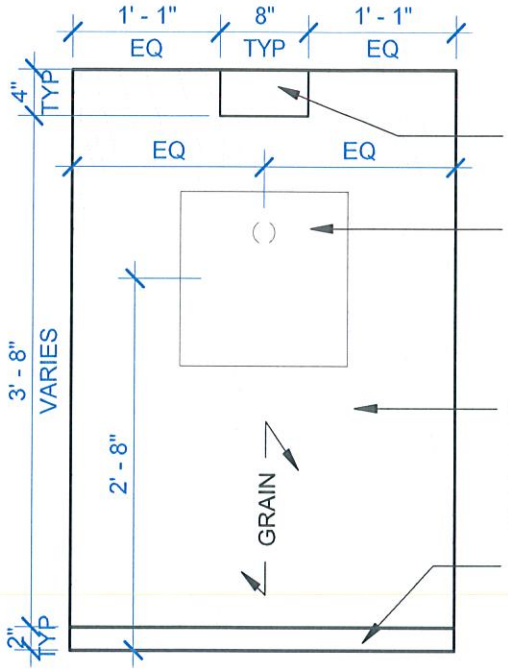

4"X8" ACRYLIC SIGNAGE - SEE DETAILS

OWNER PROVIDED SURFACE MOUNTED TECHNOLOGY PANEL/ATTACHMENT BRACKET. 2" HOLE SHALL BE DRILLED FOR WIRE MANAGEMENT AT 36" HIGH ON CENTER - SEE PLANS FOR ASSOCIATED TECHNOLOGY LOCATIONS.

WALNUT RIFT CUT VENEER. BOTH FACES SHALL BE CAPPED WITH 1/4"X1/4" HARDWOOD AT EXPOSED EDGES. STAIN TO MATCH DESIGNERS CONTROL SAMPLE.

2" HIGH RECESSED ALUMINUM BASE

1 TYPICAL TECHNOLOGY END PANEL ELEVATION
3/4" = 1'-0"

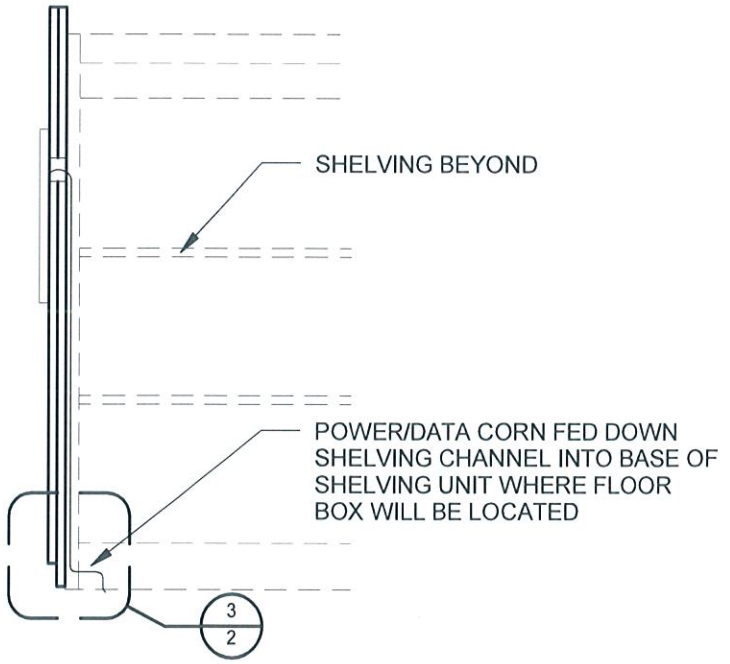

2 SIDE ELEVATION AND TYPICAL BASE DETAIL
3/4" = 1'-0"

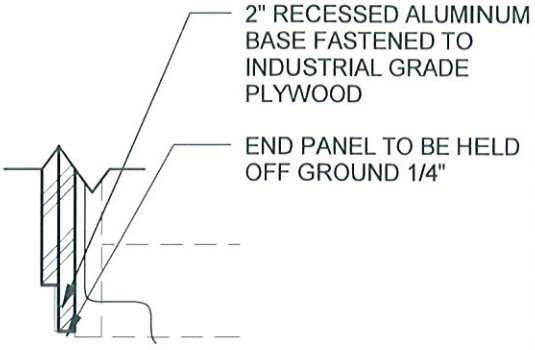

3 TYPICAL BASE DETAIL
1 1/2" = 1'-0"

OPN ARCHITECTS

Joplin Public Library

End Panels 3
Details

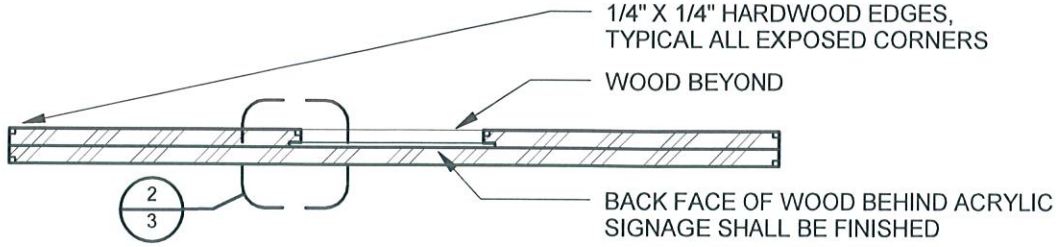

1 END PANEL SECTION
1 1/2" = 1'-0"

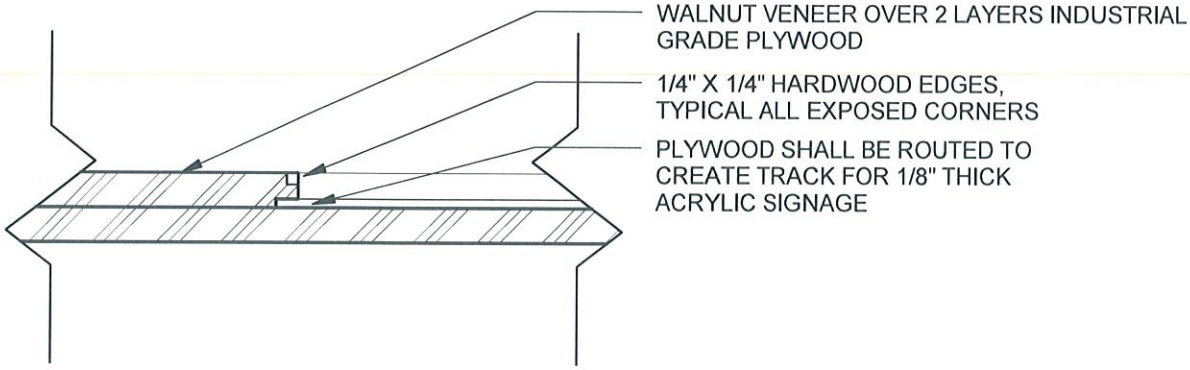

2 END PANEL SECTION DETAIL
3" = 1'-0"

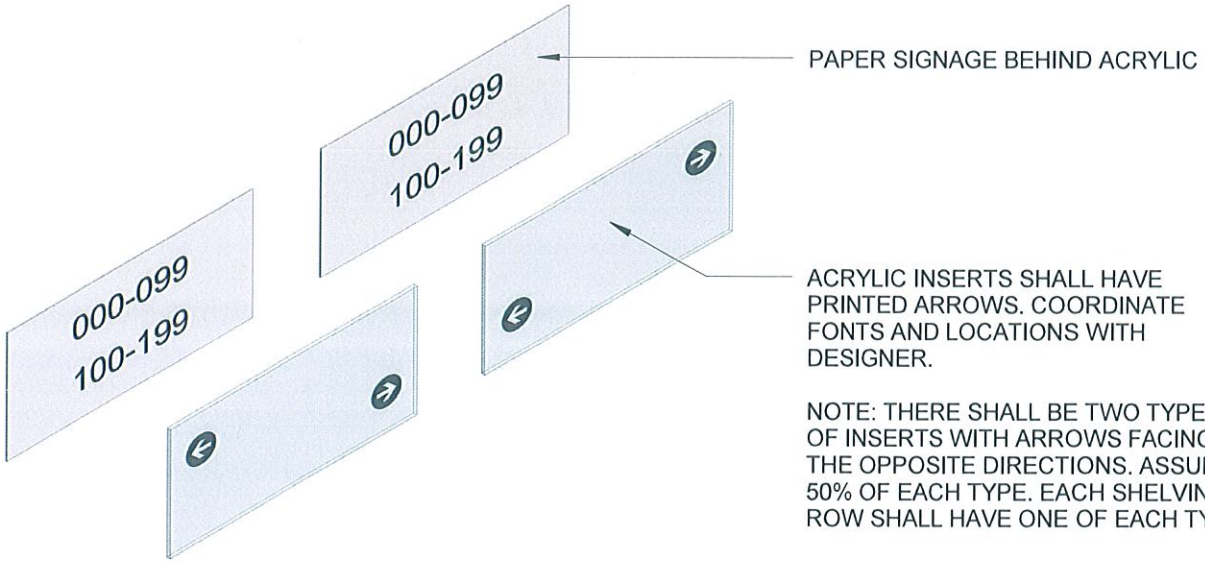

3 SIGNAGE DETAILS

OPN ARCHITECTS

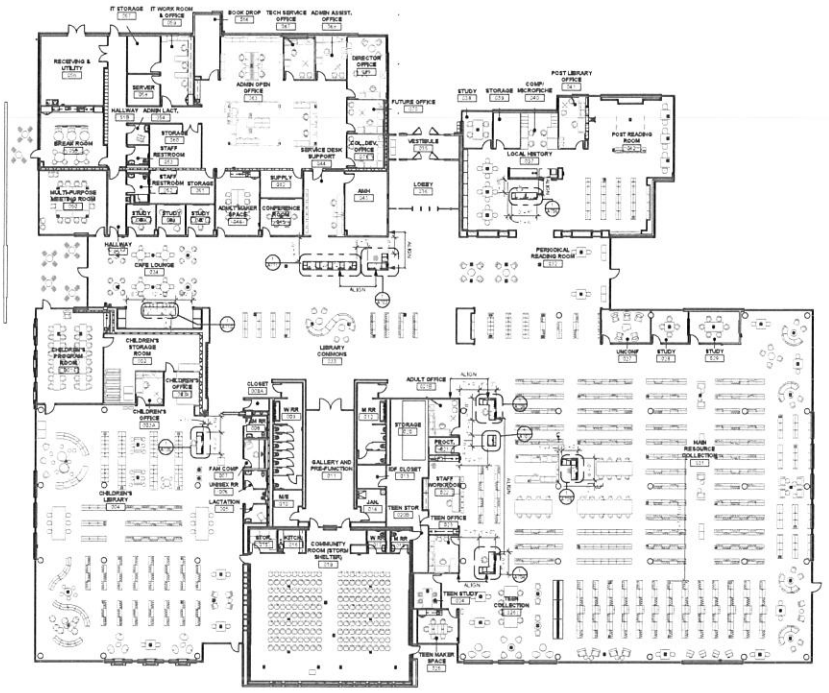

1 CASEWORK KEY PLAN
1/16" = 1'-0"

NOTE: MATERIALS LISTED ARE SPECIFIED AS A BASIS OF DESIGN ONLY. EQUALS MAY BE SUBMITTED AND REVIEWED BY OPN FOR APPROVAL.

MATERIALS LIST

ALUMINUM BASE

AB-1 MANUFACTURER: FRY REGLET
STYLE: REVEAL BASE DRAINAGE
SEE THE DEPTH & HEIGHT

AB-2 MANUFACTURER: FRY REGLET
STYLE: STRAIGHT BASE TO MATCH AB-1
SEE 4" HEIGHT

PLASTIC LAMINATE

PL-01 MANUFACTURER: NEVAMAR
COLOR: CHALK WHITE
FINISH: MATTE
APPLICATION: CASEWORK VERTICAL

PL-02 MANUFACTURER: NEVAMAR
COLOR: VALENCIA TEAK
FINISH: MATTE
APPLICATION: CASEWORK VERTICAL

METAL

MM-TYPE POWDER COATED STEEL
COLOR: RAL 3020 PURE RED
FINISH: GLOSS
GAUGE: 12 GAUGE

MM-TYPE HOT ROLLED STEEL, CLEAR COAT
FINISH: CLEAR SEALANT
GAUGE: 12 GAUGE

MM-TYPE: FRY REGLET
FINISH: CLEAR ANODIZED ALUMINUM

MM-TYPE: ALLEN BLOOM SR8 TEE OR SIMILAR
FINISH: CLEAR ANODIZED ALUMINUM, EASED EDGES

POLYMER RESIN

PR-2 MANUFACTURER: 3FORM
STYLE: VARIA ECORESIN
COLOR: POWDER
FINISH: VELUM - ALL EDGES SANDED
GAUGE: 1"
APPLICATION: BELA/HECH CASEWORK
RFQ 79853 REV 270167

PR-3 MANUFACTURER: 3FORM
STYLE: VARIA ECORESIN
COLOR: VARIA CONCORD + POMEGRANATE
FINISH: VELUM - ALL EDGES SANDED
GAUGE: 1"
MOUNTING HARDWARE: HIDDEN POINT ADAPTER PER 3FORM
MANUFACTURER SPECIFICATIONS
APPLICATION: DESK PRIVACY PANEL
CONTACT: JONATHAN REID
RFQ 79853 REV 270167

PR-4 MANUFACTURER: 3FORM
STYLE: VARIA ECORESIN
COLOR: TO MATCH PR-4 ON PROJECT
FINISH: VELUM - ALL EDGES SANDED
GAUGE: 1"
MOUNTING HARDWARE: HIDDEN POINT ADAPTER PER 3FORM
MANUFACTURER SPECIFICATIONS
APPLICATION: DESK PRIVACY PANEL

QUARTZ

QZ-1 MANUFACTURER: ZODIAQ
COLOR: CLOUD WHITE
THICKNESS: VARIES, SEE DETAILS
APPLICATION: COUNTERTOPS

WALL BASE

WB-1 MANUFACTURER: JOHNSONITE
STYLE: 4" STRAIGHT
COLOR: 2 PVC-WEB
APPLICATION: MAIN WALL BASE @ LIFT AND BY

WOOD VENEER PANELING

WVP-1 SPECIES: WALNUT
CUT: RIFT
STAIN: TO MATCH WVP-1 ON PROJECT

GENERAL NOTES

1. ALL DOOR HINGES TO BE OF THE CONCEALED TYPE UNLESS NOTED OTHERWISE.
2. PROVIDE NECESSARY BLOCKING IN ALL WALLS TO RECEIVE CASEWORK & TRIMWORK.
3. ALL FINISHED DIMENSIONS TO BE FIELD VERIFIED PRIOR TO FABRICATION OF CASEWORK.
4. CABINET ELEVATIONS & SECTIONS SHOW DESIGN INTENT OF ARCHITECT. CASEWORK CONTRACTOR IS RESPONSIBLE FOR TYPICAL CABINET BRACING EVEN IF NOT SPECIFICALLY SHOWN OR NOTED ON THE DRAWINGS.
5. FINISH ALL EXPOSED END PANELS OF CASEWORK TO MATCH ADJACENT CASEWORK UNLESS NOTED OTHERWISE.
6. ALL DIMENSIONS & CASEWORK ARE TO FACE OF FINISHED SURFACE UNLESS NOTED OTHERWISE.
7. ALL PIPES OF PLUMBING LOCATIONS AND EQUIPMENT OPENINGS SHALL BE LOCATED AND CUT ON SITE WITH EQUIPMENT CONSULTANT AND OWNER VERIFY LOCATIONS WITH DESIGNER PRIOR TO INSTALLATION.
8. BUILDING ELECTRICAL FEEDS TO BE COORDINATED WITH ELECTRICAL MILLWORK DRAWINGS AS NOTED ON PLANS. MORE POWER AS NECESSARY IN AREAS WITH RAISED ACCESS FLOORING.
9. ALL CABINETRY SHALL BE LOCKABLE. PROVIDE ONE MASTER LOCK PER PLAN. COORDINATE WITH OWNER.
10. MOUNTING OF ALL AUDIO VISUAL ITEMS SHALL BE COORDINATED WITH EQUIPMENT CONSULTANT, OWNER, AND DESIGNER. ALL OTHER ELECTRICAL DEVICES TO BE SIMILAR TO 2" SQUARE MOCKETT MAGNA-MI. VERIFY LOCATIONS WITH DESIGNER PRIOR TO INSTALLATION. EQUIPMENT MOUNTING DETAILS TO BE COORDINATED WITH EQUIPMENT CONSULTANT AND OWNER.
11. CONTRACTOR TO VERIFY ELECTRICAL FEED LOCATIONS AND COORDINATE WITH MILLWORK. NOTIFY DESIGNER IF DISCREPENCIES OCCUR.
12. CASEWORK PULLS SHALL BE STANDARD. ARCH PULLS CONTRACTOR TO SUBMIT CUTSHEET DURING SHOP DRAWINGS.
13. ALL BASE CABINETS SHALL BE COUNTERBALANCED. TYPICAL.

SPECIAL NOTICES

All the work the Joint Contractor Effort performed in connection with the plans, specifications or other construction documents prepared by the Architect and his consultants is the property of the Architect and shall not be used on any other work except by agreement with the Architect. This prohibition also applies to such documents after the termination of the project. Submission or distribution of such documents to meet official regulatory requirements or for similar purposes in connection with the project is not to be construed as publication in derogation of the Architect's common law copyright or other reserved rights.

The architect and all of the engineers working on a project shall be the legal owners of all the statutory employee & author of work, and the name of the lead author(s) as the owner and the Seal affixed thereto shall be prominently displayed on the face of all drawings. In the event of any dispute, claim, action, arbitration, suit or other proceeding, a work product, agency, or a contractor to use in the part or parts of the architectural work.

NEW BUILDING
Joplin Public Library
1901 E. 20th Street
JOPLIN, MISSOURI 64801
JASPER COUNTY
EDA PROJECT NO. 05-79-05345

Revision No.	Description	Date

Associate Architect: Interior Design

Brad A. Brown, Architect MO 7808.42

STATE OF MISSOURI
REGISTERED ARCHITECT
MICHAEL JAMES SAPP
NUMBER A-6051

Michael James Sapp, Architect MO A-6051

OPN ARCHITECTS

OPN Architects - Missouri State Certificate of Authority #2007000521

SDA ARCHITECTS
SAPP DESIGN ASSOCIATES ARCHITECTS
3750 S. Fremont, Springfield, MO 65804
Phone 417-887-8080
Fax 417-887-8090

Sapp Design Associates Architects, P.C.
Missouri State Certificate of Authority #2006021

Project No.	Date	Drawn
1428000	03-15-17	Author

Drawing No.
A702
CASEWORK DETAIL FLOOR PLAN

©Copyright 2016, Sapp Design Associates, Architects, P.C.

City of **JOPLIN** City Council Agenda Item

Requested Council Meeting Date: February 20, 2017
Council Bill No. 2017-365

Item: Purchase Agreement for the new Joplin Library Canopy Tops and Panels
Originating Department: Planning, Development and Neighborhood Services

Attachments: 1) Bid Tabulation
2) Council Bill No. 2017-365
3) RFP Specifications

Department Head: Troy Bolander
Finance Department: Leslie Haase
City Attorney: Peter C. Edwards
City Manager: Samuel L. Anselm

Recommended Action: Approval of a Purchase Order for SBD Commercial, with a not to exceed amount of One Hundred and Eighteen Thousand, Eight Hundred and Ninety-Seven Dollars ($118,897.00) for library book stack end panels and canopy tops for the Economic Development Administration grant funded new Joplin Public Library.

Background: In February 2016, the Economic Development Administration (EDA) approved the Request for Bids public posting for Furniture and Casework. In March 2017, sealed bids were received and reviewed for the Canopy Tops and End Panels.

Discussion: On March 10, 2017, the lowest bid from SBD Commercial was selected.

Recommendation: Staff recommends approval of the furniture units purchase and it be approved on an emergency basis per Section 2.12 (6) in that said ordinance provides for public improvements and is considered an emergency by the Council and as such shall become effective immediately upon this passage as provided by the Home Rule Charter for the City of Joplin in order to maintain the project schedule to meet the EDA required completion date of May 22, 2017.

JOPLIN PUBLIC LIBRARY
EDA#: 05-79-05345
BID TABULATION RESULTS - PACKAGE #2
MARCH 8, 2017
OPN ARCHITECTS, INC.
OPN#: 14289000

	End Panels	Canopy Tops	Total
BIDDERS			
Color Art Integrated Interiors Springfield, MO	NO BID	NO BID	
Furniture by William Webb Carrollton, TX	NO BID	NO BID	
Grooms Office Environments Springfield, MO	NO BID	NO BID	
Norman Company Bentonville, AR	NO BID	NO BID	
MSW Inc. Joplin, MO	$123,249.00	$13,607.00	**$136,856.00**
SBD Commercial Interiors Jackson, MI	$116,165.00	$2,732.00	**$118,897.00**

SBD Low Bid Selected

COUNCIL BILL NO. 2017-365 **ORDINANCE NO.**

AN ORDINANCE approving a Purchase Order to be issued to SBD Commercial for book stack end panels; and, authorizing the City Manager or his designee to execute said Purchase Order by and on behalf of the City of Joplin; and containing an emergency clause.

WHEREAS, the Economic Development Administration awarded Joplin a $20,000,000 library and infrastructure grant in 2013; and,

WHEREAS, the building and site construction is nearing completion and library equipment and supplies are being purchased prior to the May 22, 2017, construction end date; and,

WHEREAS, SBD Commercial was awarded the competitive low bid on Canopy Tops and End Panels; and,

NOW, THEREFORE, BE IT ORDAINED BY THE COUNCIL OF THE CITY OF JOPLIN, MISSOURI, as follows:

Section 1. Pending final EDA approval, that a Purchase Order be issued to SBD Commercial, hereby approved for One Hundred Eighteen Thousand, Eight Hundred and Ninety-Seven Dollars. ($118,897.00).

Section 2. That the City Manager, or his designee, is hereby authorized and directed to execute said Purchase Order by and on behalf of the City of Joplin, Missouri.

Section 3. This Ordinance is declared by the City Council to be an emergency within this meaning of Section 2.12, subparagraph (6), of the Home Rule Charter of the City of Joplin, Missouri, and as such shall become effective immediately upon its passage.

PASSED BY THE COUNCIL OF THE CITY OF JOPLIN, MISSOURI, this ____ day of _____, 2017, by a _____vote.

_____
Michael Seibert, Mayor

ATTEST:

_____
Barbara L. Hogelin, City Clerk

APPROVED AS TO FORM:

_____
Peter Edwards, City Attorney

City of Joplin City Council Agenda Item

REQUESTED COUNCIL MEETING DATE: MARCH 20, 2017

ITEM: COUNCIL BILL NO. 2017-506
ORIGINATING DEPARTMENT: FINANCE DEPARTMENT
ATTACHMENTS: 1) Copy of Council Bill with attached Schedule A

Department Head: Leslie Haase
City Attorney: Peter Edwards
City Manager: Sam Anselm

INTRODUCTION:
This Council Bill amends the adopted 2016-2017 Budget of the City of Joplin.

DISCUSSION:
In compliance with Charter regulations and accounting principles, the proposed adjustment is required to ensure that department expenditures do not exceed approved budget appropriations.

Here is the explanation for the items in Schedule A:

- Reducing various budgets by the amount of $435,996 for the facility rent allocation for the annual payment of the COPS for City Hall. With the advance refunding of the COPS for City Hall, the annual rent assessment is no longer applicable.
- Amending the TIF Reimbursable revenue and expenditure budget for $5,000.
- Amending the IT budget in the amount of $11,560 to run fiber line to Fire Station 6 in order to reduce the monthly costs for the AT&T connection and Zetron circuit. By switching to fiber, the current monthly cost will decrease over $1,100 per month.
- Amending the Parks Grounds Maintenance budget in the amount of $59,250 for the FEMA cleanup costs from the flood disaster. The City received reimbursement from FEMA for this work in fiscal year 2016, but we didn't complete all of the cleanup work until this fiscal year.
- Amending the Community Planning revenue and expenditure budget in the amount of $100,000 for the continuation of the Neighborhood Stabilization Program.
- Amending the Debt Service budget in the amount of $2,398,230 to pay the advance refunding of the COPS, while reducing the revenue by $435,996 to reflect the reduction of the rent assessment from the other funds.

The purpose of the budget amendment is to recognize changes that have occurred since the annual budget was adopted. This budget amendment decreases revenues by $330,996.00 and increases expenditures by $2,138,074.00.

RECOMMENDATION:
City Staff recommends this Council Bill be approved on an emergency basis.

COUNCIL BILL NO. 2017-506 **ORDINANCE NO.**

AN ORDINANCE amending the Annual Budget of the City of Joplin for the Fiscal Year 2016-2017 as adopted by Ordinance 2016-177 on October 17, 2016, to adjust appropriations and containing an emergency clause.

WHEREAS, the City of Joplin, Missouri passed Ordinance 2016-177 on October 17, 2016, which estimated revenues and appropriated funds for the fiscal year 2016-2017, and

WHEREAS, the Council of the City of Joplin has previously approved the programs and projects which require additional appropriations for completion.

BE IT ORDAINED BY THE COUNCIL OF THE CITY OF JOPLIN, MISSOURI, as follows:

Section 1. That fiscal year 2016-2017 budgeted appropriations as adopted by Ordinance 2016-177 be amended by decreasing revenues by the total amount of Three Hundred Thirty Thousand Nine Hundred Ninety-Six Dollars and No Cents ($330,996.00) and by increasing appropriations by the total amount of Two Million One Hundred Thirty-Eight Thousand Seventy-Four Dollars and No Cents ($2,138,074.00) for the purposes and amounts as shown in Schedule A attached hereto.

Section 2. That the Director of Finance is hereby directed to make all necessary entries on the City records to show the increase in appropriations.

Section 3. This Ordinance is declared by the City Council to be an emergency within this meaning of Section 2.12 (4), of the Home Rule Charter of the City of Joplin, Missouri, in order to continue the day-to-day operations of the City and as such shall become effective immediately upon its passage.

PASSED BY THE COUNCIL OF THE CITY OF JOPLIN, MISSOURI, this _____ day

of _____, 2017, by a _____vote.

_____
Mayor, Michael L. Seibert

ATTEST:

_____
Barbara L. Hogelin, City Clerk

APPROVED AS TO FORM:

_____
Peter C. Edwards, City Attorney

SCHEDULE A

CITY OF JOPLIN
BUDGET AMENDMENT
2016-2017 ADOPTED BUDGET
13-Mar-17

FUND	ACTIVITY	ACCOUNT	DESCRIPTION		REVENUES	EXPENDITURES
001	General Fund					
	General Fund	001-0000-440-0913	TIF Administrative Fees	$	5,000	
	City Council	001-0101-500-2855	Facility Rent Allocation			(77,368)
	City Manager	001-0501-500-2855	Facility Rent Allocation			(28,532)
	City Clerk	001-0801-500-2855	Facility Rent Allocation			(10,065)
	City Attorney	001-1002-500-2855	Facility Rent Allocation			(24,431)
	HR Administration	001-1201-500-2855	Facility Rent Allocation			(5,943)
	HR Personnel Services	001-1202-500-2855	Facility Rent Allocation			(23,774)
	Building Regulations	001-1506-570-2855	Facility Rent Allocation			(18,021)
	Finance Administration	001-2001-500-2855	Facility Rent Allocation			(3,515)
	Finance Accounting Services	001-2003-500-2855	Facility Rent Allocation			(35,149)
	Information Technology	001-2501-500-2855	Facility Rent Allocation			(24,951)
	PW Administration	001-4501-520-2855	Facility Rent Allocation			(6,007)
	City Hall Maintenance	001-4504-520-2855	Facility Rent Allocation			(35,948)
	Engineering	001-4505-520-2855	Facility Rent Allocation			(42,350)
	PW Operations	001-4506-520-2855	Facility Rent Allocation			(3,004)
	Neighborhood Improvement	001-8001-520-2855	Facility Rent Allocation			(18,622)
	Finance TIF Reimbursable	001-2015-500-5015	Legal Fees			5,000
	Information Technology	001-2501-500-8315	Computer Equipment			11,560
	Transfers Out	001-9003-500-9205	Transfer to Debt Service			30
	Total General Fund			$	5,000	(341,090)
105	CVB Fund					
	CVB Administration	105-4001-560-2855	Facility Rent Allocation			(18,873)
	CVB Special Projects	105-4080-560-2855	Facility Rent Allocation			(6,291)
	Total CVB Fund			$	-	(25,164)
115	Parks Fund					
	Parks & Public Grounds	115-6532-560-5090	FEMA Cleanup Fees			59,250
	Total Parks Fund			$	-	59,250
120	SWM Fund					
	Billing & Collection	120-2002-540-2855	Facility Rent Allocation			(5,113)
	Planning & Mgmt	120-4510-540-2855	Facility Rent Allocation			(3,004)
	Total SWM Fund			$	-	(8,117)
150	Community Planning Fund					
	Community Planning	150-0000-470-0655	Neighborhood Stabilization		100,000	-
	Administration	150-1501-570-2855	Facility Rent Allocation			(7,457)
	Planning & Zoning	150-1505-570-2855	Facility Rent Allocation			(1,864)
	CDBG-DR II	150-1518-570-2855	Facility Rent Allocation			(11,357)
	Home Consortium	150-1520-570-2855	Facility Rent Allocation			(2,486)
	MPO	150-1591-570-2855	Facility Rent Allocation			(6,214)
	NSP	150-1525-570-7416	Neighborhood Stabilization			100,000
	Total Community Planning Fund			$	100,000	70,622

205	Debt Service Fund					
	Debt Service	205-000-440-1001	City Hall Rent Assessment		(435,996)	-
	Debt Service	205-8703-500-7110	Interest			33,230
	Debt Service	205-8703-500-7165	Principal			2,365,000
	Total Debt Service Fund			$	(435,996)	2,398,230
415	Sewer Fund					
	Billing & Collection	415-2002-540-2855	Facility Rent Allocation			(15,657)
	Total Sewer Fund			$	-	(15,657)
	Grand Total			$	(330,996)	2,138,074