COUNCIL AGENDA
October 5, 2015
6:00 P.M., Council Chambers

1. **Call To Order**
   Invocation
   Pledge of Allegiance of the United States of America

2. **Roll Call**

3. **Presentations**

   1. Bi-Annual Update From Segal On Insurance Benefits.

4. **Finalization Of Consent Agenda**

5. **Reports And Communications**

6. **Citizen Requests And Petitions**

7. **Public Hearings**

   1. PUBLIC HEARING PROCEDURES

   2. COUNCIL BILL NO. 2015-270
      AN ORDINANCE approving the voluntary annexation by the City of Joplin of property located at the northwest corner of Seventh Street and Lavender Lane in Jasper County, Missouri.

      Documents: SUMMARY SHEET CB 2015-270 .PDF, COUNCIL BILL 2015-270 .PDF, SUPPLEMENTAL CB 2015-270.PDF

   3. COUNCIL BILL NO. 2015-271
      AN ORDINANCE amending Ordinance No. 2004-256, passed by the Council of the City of Joplin, Missouri, November 15, 2004, by removing from District R-1 and including in District R-2 property as described below and located at the southeast corner of Shady Lane and Silver Creek Drive in the City of Joplin, Newton County, Missouri.

      Documents: SUMMARY SHEET CB 2015-271 .PDF, COUNCIL BILL 2015-271 .PDF, SUPPLEMENTAL CB 2015-271.PDF

   4. COUNCIL BILL NO. 2015-272
      AN ORDINANCE amending Ordinance No. 2004-256, passed by the Council of the City of Joplin, Missouri, November 15, 2004, by removing from District R-1 and including in District R-2 property as described below and located at 1831 New Hampshire Avenue in the City of Joplin, Jasper County, Missouri.

      Documents: SUMMARY SHEET CB 2015-272 .PDF, COUNCIL BILL 2015-272 .PDF, SUPPLEMENTAL CB 2015-272.PDF

   5. COUNCIL BILL NO. 2015-273
      AN ORDINANCE amending Ordinance No. 2004-256, passed by the Council of the City of Joplin, Missouri, November 15, 2004, by removing from District R-1 and including in District C-1 property as described below and located at 729 West 32nd Street in the City of Joplin, Jasper County, Missouri.

      Documents: SUMMARY SHEET CB 2015-273.PDF, COUNCIL BILL 2015-273 .PDF, COUNCIL BILL 2015-273 AMENDED.PDF, SUPPLEMENTAL CB 2015-273.PDF

6. COUNCIL BILL NO. 2015-274
   AN ORDINANCE amending Ordinance No. 2004-256, passed by the Council of the City of Joplin, Missouri, November 15, 2004, by removing from District R-1 and including in District R-2 property as described below and located at 1136 West 26th Street in the City of Joplin, Jasper County, Missouri.

   Documents: SUMMARY SHEET CB 2015-274 .PDF, COUNCIL BILL 2015-274 .PDF, SUPPLEMENTAL CB 2015-274.PDF

7. COUNCIL BILL NO. 2015-275
   AN ORDINANCE providing for the vacation of a 10-foot wide public utility easement located at 2215 Wisconsin Avenue in the City of Joplin, Jasper County, Missouri.

   Documents: SUMMARY SHEET CB 2015-275 .PDF, COUNCIL BILL 2015-275 .PDF, SUPPLEMENTAL CB 2015-275.PDF

8. **Consent Agenda**

   1. Minutes Of The September 21, 2015 Joplin City Council Meeting

      Documents: SEPTEMBER 21 2015 MIN.PDF

   2. Council Bill 2015-621
      AN ORDINANCE authorizing the City of Joplin to enter into an Agreement with the Center for Priority Based Budgeting for the purpose of providing professional consulting services; and authorizing the City Manager to execute said Agreement by and on behalf of the City of Joplin, Missouri.

      Documents: CB 2015-621 SUMMARY.PDF, CB 2015-621 COUNCIL BILL.PDF, CB 2015-621 SUPPLEMENTAL.PDF

9. **Resolutions**

10. **Ordinances - Emergency**

    1. COUNCIL BILL 2015-367
       AN ORDINANCE authorizing the City of Joplin to enter into an Agreement with Heritage Strategies for Preservation Planning Services relating to the update of the Preservation Plan; authorizing the City Manager to execute said Agreement for the City; and containing an emergency clause.

       Documents: DRAFT AGREEMENT AND GENERAL TERMS.PDF, PRES PLAN SUMMARY.PDF, CB 2015-367.PDF, SUMMARY 2015-367.PDF

    2. COUNCIL BILL2015-371
       AN ORDINANCE the City of Joplin to enter into an Acquisition of Real Estate Agreement with Dr. Gary L. Selby and Teresa L. Selby for property associated with the development of the new City of Joplin public park at 26th Street; authorizing the City Manager to execute said Agreement in substantially similar form; and containing an emergency clause.

       Documents: EXHIBIT A.PDF, EXHIBIT B.PDF, EXHIBIT C.PDF, CB 2015-371.PDF, SUMMARY 2015-371.PDF

    3. COUNCIL BILL 2015-372
       AN ORDINANCE authorizing the City of Joplin to enter into an Agreement with R.E. Smith Construction in the amount not to exceed $4,031,000 to provide construction and associated development of the City of Joplin public park at 26th & McClelland, along with 26th Street sidewalk and trail

improvements, to be funded with the CDBG-DR2, authorizing the City Manager to execute said Agreement for the City, and containing an emergency clause.

Documents: EXHIBIT A - CONTRACT.PDF, EXHIBIT B.PDF, EXHIBIT C.PDF, EXHIBIT D.PDF, EXHIBIT E.PDF, CB 2015-372.PDF, SUMMARY 2015-372.PDF

4. COUNCIL BILL NO. 2015-622

An Ordinance approving a Contract for grant money by and between the City of Joplin, Missouri and the Missouri Department of Transportation dealing generally with the Full Time DWI Unit, Hazardous Moving Violations Enforcement, and DWI Enforcement in the amount of One Hundred Twenty-Four Thousand, Nine Hundred Dollars ($124,900.00); authorizing the City Manager to execute the same by and on behalf of the City of Joplin, Missouri; and containing an emergency clause.

Documents: COUNCIL AGENDA ITEM (GREEN SHEET) MODOT GRANTS.PDF, COUNCIL BILL MODOT GRANTS.PDF, DWI ENFORCEMENT AND YOUTH ALCOHOL GRANT.PDF, FULL TIME DWI UNIT GRANT.PDF, HMV OVERTIME GRANT.PDF

11. **Ordinances - First Reading**

1. COUNCIL BILL 2015-362
AN ORDINANCE amending Chapter 26 Buildings and Building Regulations by repealing and enacting a new Article III, Building Code, and setting a date when this ordinance shall become effective.

Documents: ATTACHMENT A- CB 2015-362.PDF, CB 2015-362.PDF, SUMMARY CB 2015-362.PDF

2. COUNCIL BILL 2015-364
AN ORDINANCE amending Chapter 58, Fire Prevention and Protection, by repealing and enacting a new Section 58-1, Bonfires and outdoor rubbish fires, and by repealing and enacting a new Article II, Fire Prevention Code, and setting a date when this ordinance shall become effective.

Documents: CB 2015-364.PDF, SUMMARY CB 2015-364.PDF

12. **Ordinances - Second Reading And Third Reading**

13. **Unfinished Business**

14. **New Business**

1. NEWS FROM THE PIO

2. Declare Extra Surplus Property For City Auction

Anyone wishing to address the Council should step to the podium and state his/her name and address. If the matter is not a Public Hearing, a request to speak to the Council should be prepared prior to the meeting. Speaking time will be limited to five (5) minutes.

Sound enhancement units are available for hearing impaired customers who provide a

form of identification as security, which will be returned to the customer upon the return of the unit.

Those in need of disability-related auxiliary aids or services should contact the City Clerk's office at (417) 624-0820, ext. 220 no later than 48 hours prior to the meeting.

Notice posted at ____ p.m. on this the __ day of ____, ____. (RSMo 610.020)

City of **JOPLIN** City Council Agenda Item

Requested Council Meeting Date: October 5, 2015

Item: COUNCIL BILL NO. 2015-270
Originating Department: PLANNING & COMMUNITY DEVELOPMENT

Attachments: 1) Copy of Council Bill
2) Planning Report
3) Commission Minutes

Planning/Community Development Manager: Troy Bolander
City Attorney: Peter C. Edwards
City Manager: Samuel L. Anselm
Board or Commission: Planning and Zoning Commission Date: 9/14/2015

Recommended Action: Planning and Zoning Commission recommended approval by a vote of "7 in favor, 0 absent"

SUMMARY/REQUEST:
Case 018-15: Northwest corner of Seventh Street and Lavender Lane – A request to voluntarily annex 2.42 acres into the corporate limits of the City of Joplin – Aaron Garman.

STAFF SUMMARY:
The applicant is requesting to voluntarily annex approximately 2.42 acres of land at the intersection of Seventh Street and Lavender Lane to build his personal residence.

Staff recommends approval of Case 018-15.

PLANNING & ZONING COMMISSION TESTIMONY:
Mr. Aaron Garman requested the annexation of the property in Case 018-15. Ms. Cunningham stated this is property Mr. Garman owns that is bounded by Joplin and Duquesne. He would like to annex into the City of Joplin for access to city sewer and other utilities. The property is adjacent to Joplin's current city limits.

Mr. Smith asked about the properties to the south along Seventh Street, and Ms. Cunningham replied they are not currently in Joplin. Mr. Garman owns the horseshoe-shaped portion surrounding those properties and is planning to construct his personal home there.

Mr. Bolander stated the property to the east lies in the City of Joplin. University Circle lies in Duquesne, but Tall Grass Estates is in the City of Joplin.

Mr. Duncan asked Mr. Garman if he plans to build a residence on this property, and he replied yes.

Mr. Duncan asked if the property will automatically be zoned R-1, and Mr. Bolander replied yes. All annexed property comes into the City of Joplin with R-1 zoning since it is the most protected zoning classification.

PUBLIC COMMENT:
None.

P & Z Case 018-15
Aaron Garman
(P & Z Recommended Approval)

COUNCIL BILL NO. 2015-270 ORDINANCE NO.

AN ORDINANCE approving the voluntary annexation by the City of Joplin of property located at the northwest corner of Seventh Street and Lavender Lane in Jasper County, Missouri.

WHEREAS, pursuant to Section 71.012, RSMo., 2001, as amended, a verified Petition requesting annexation and signed by the owners of all fee interests of record in the tracts of real property described herein, was presented to the governing body of the City of Joplin, Missouri; and,

WHEREAS, pursuant to said Section, having referred this matter to the Planning and Zoning Commission for a Public Hearing thereon and having obtained the favorable recommendation and support of said annexation; and,

WHEREAS, having held a Public Hearing concerning the proposed annexation not less than fourteen (14) nor more than sixty (60) days after the Petition is received after first having given seven (7) days' notice of the Hearing in the Joplin Globe; and,

WHEREAS, after said Public Hearing, the City of Joplin determines that the annexation is reasonable and necessary to the proper development of the City of Joplin, and that the City of Joplin has the ability to furnish normal municipal services to the area to be annexed within a reasonable time; and

WHEREAS, having received no written objections to the proposed annexation within fourteen (14) days after the Public Hearing.

NOW, THEREFORE, BE IT ORDAINED BY THE COUNCIL OF THE CITY OF JOPLIN, MISSOURI, as follows:

Section 1. That the following described tract of land be and the same is hereby annexed into the City of Joplin, Missouri, said tract of land described as follows, to-wit:

ALL THAT PART OF THE SOUTHEAST QUARTER OF THE SOUTHWEST QUARTER OF THE SOUTHWEST QUARTER OF SECTION 5, TOWNSHIP 27, RANGE 32, JASPER COUNTY, MISSOURI DESCRIBED AS FOLLOWS: COMMENCING AT THE SOUTHEAST CORNER OF THE SOUTHEAST QUARTER OF THE SOUTHWEST QUARTER OF THE SOUTHWEST QUARTER THENCE NORTH 0°27'48" EAST ALONG THE EAST LINE OF SAID QUARTER QUARTER QUARTER 74.32 FEET TO THE NORTH LINE OF EAST 7TH STREET; THENCE CONTINUING NORTH 0°27'48" EAST 586.48 FEET TO THE POINT OF BEGINNING; THENCE SOUTH 89°50'00" WEST 658.93 FEET; THENCE SOUTH 0°36'10" WEST 143.63 FEET; THENCE EAST 194.01 FEET; THENCE SOUTH

0°44’04” WEST 41.96 FEET; THENCE EAST 367.81 FEET; THENCE NORTH 27°55’16” EAST 211.75 FEET TO THE POINT OF BEGINNING, CONTAINING 2.42 ACRES AND SUBJECT TO ANY EXISTING EASEMENTS OR RESTRICTION OF RECORD.

Section 2. That the City Clerk is hereby authorized and directed to cause three (3) certified copies of this Ordinance to be filed with the Clerk of Jasper County, Missouri.

Section 3. That this Ordinance shall be in full force and effect as of 12:01 a.m., on the First (1st) day of December, 2015.

PASSED BY THE COUNCIL OF THE CITY OF JOPLIN, MISSOURI, this the _____ day of _____, 2015, by a vote of _____.

_____
Michael L. Seibert, Mayor

ATTEST:

_____
Barbara L. Hogelin, City Clerk

APPROVED AS TO FORM:

_____
Peter C. Edwards, City Attorney

Z&P Meeting: July 17, 2015
City Council Meeting: August 3, 2015

STAFF PLANNING REPORT
Voluntary Annexation

CASE 018-15: A request to voluntarily annex approximately 2.42 acres at 7th Street and Lavender Lane.

LOCATION: Located approximately 400' north of the intersection of 7th street and Lavender Lane.

APPLICANT: Aaron Garman

EXISTING CONDITIONS:

Zoning	Land Use	Property Size
N/A (Jasper County, MO)	Residential	2.42 acres

DISCUSSION
The applicant is requesting to voluntarily annex approximately 2.42 acres of land at the intersection of 7th street and Lavender Lane to build his personal residence.

Staff recommends approval of Case 018-15.

ENCLOSURES:
Map of area to be annexed

BEFORE THE COUNCIL OF THE CITY OF JOPLIN, MISSOURI

PETITION FOR VOLUNTARY ANNEXATION
PURSUANT TO 71.012, RSMO., 1994

TO WHOM IT MAY CONCERN:

Pursuant to the terms of V.A.M.S. 71.02, the undersigned, being all of the owners of fee interests of record in all tracts of real property attached hereto and incorporated herein as Exhibit "A", do hereby request the voluntary annexation of said land to the City of Joplin, Missouri.

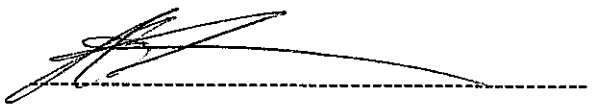

STATE OF MISSOURI)
) ss:
COUNTY OF ~~JASPER~~ Jasper)

On this 11th day of September ~~2013~~ 2016, before me appeared Aaron Gallman, a single person, to me known to be the person described in and who acknowledged that he/she executed the foregoing instrument, and acknowledged that she/she executed the same as his/her free act and deed.

IN TESTIMONY WHEREOF, I have hereunto set by hand and affixed by official seal, in the County and State aforesaid, the day and year first above written.

My commission expires: 6-29-2016.

Lindsay J. Dunn
LINDSAY J. DUNN
Notary Public

LINDSAY J. DUNN
NOTARY PUBLIC
NOTARY SEAL
#12380334
JASPER COUNTY
STATE OF MISSOURI
MY COMMISSION EXPIRES 6-29-2016

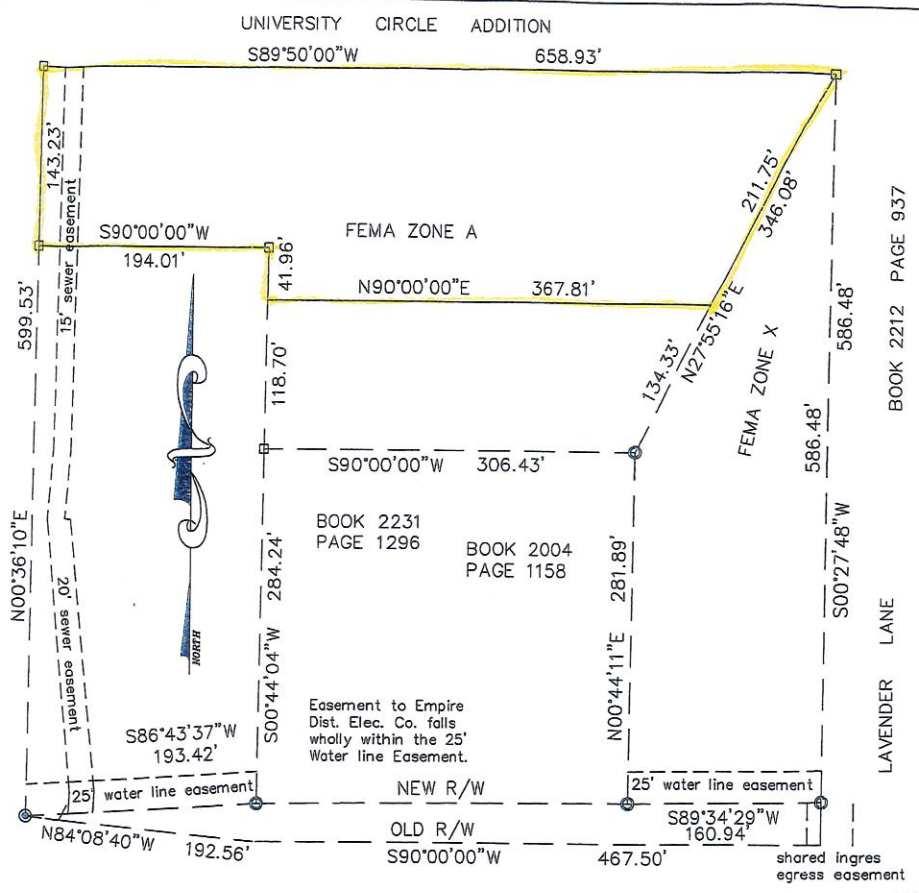

DESCRIPTION FOR PROPOSED ANNEXATION

All that part of the Southeast Quarter of the Southwest Quarter of the Southwest Quarter of Section 5, Township 27, Range 32, Jasper County, Missouri, described as follows: Commencing at the Southeast corner of the Southeast Quarter of the Southwest Quarter of the Southwest Quarter; thence North 0°27'48" East along the East line of said Quarter Quarter Quarter 74.32 feet to the North line of East 7th Street; thence continuing North 0°27'48" East 586.48 feet to the point of beginning; thence South 89°50'00" West 658.93 feet; thence South 0°36'10" West 143.63 feet; thence East 194.01 feet; thence South 0°44'04" West 41.96 feet; thence East 367.81 feet; thence North 27°55'16" East 211.75 feet to the point of beginning.

Containing 2.42 Acres according to Surveyor's Calculations.

Subject to any existing easements or restriction of record.

FEMA INFORMATION

Surveyor has determined Tract 1 to be in FEMA Zone X (Area determined to be outside the 0.2% Annual chance Floodplain), according to Community Panel No. 29097C0279E, dated November 2, 2012.

NOTE

THIS SURVEY IS NOT A PROPERTY BOUNDARY SURVEY BUT IS FOR THE PURPOSE OF SHOWNING THE PROPOSED ANNEXTION TO THE SURROUNDING TRACTS.

BEARINGS ARE BASED ON THE RECORDED DEEDS.

BOOK & PAGE ALONG WEST LINE
BOOK 1471 PAGE 1933
BOOK 1507 PAGE 931

100 0 50 100
(IN FEET)
1 INCH = 100 FT.

LEGEND
- FOUND IRON PIN
- SET 1/2" IRON PIN
- FOUND R/W MARKER

STATE OF MISSOURI
CHRIS E. STEWART
NUMBER LS-1960
REGISTERED LAND SURVEYOR

05.28.2015

CHRIS E. STEWART RLS 1960

CHRIS STEWART SURVEYING
1217 E. 24th Street
Joplin, Missouri
64804
PHN 417-782-1595
e mail
karensue.stewart@yahoo.com

CUSTOMER: GARMAN			
SURVEY OF Part Section 5, T-27, R-32 674 S Lavender Lane – Joplin			
DATE 05/28/15	BY CES	REVISED 09/29/14	BOOK PAGE FILE 052732g3
SCALE 1"=100'	ACC Urban		

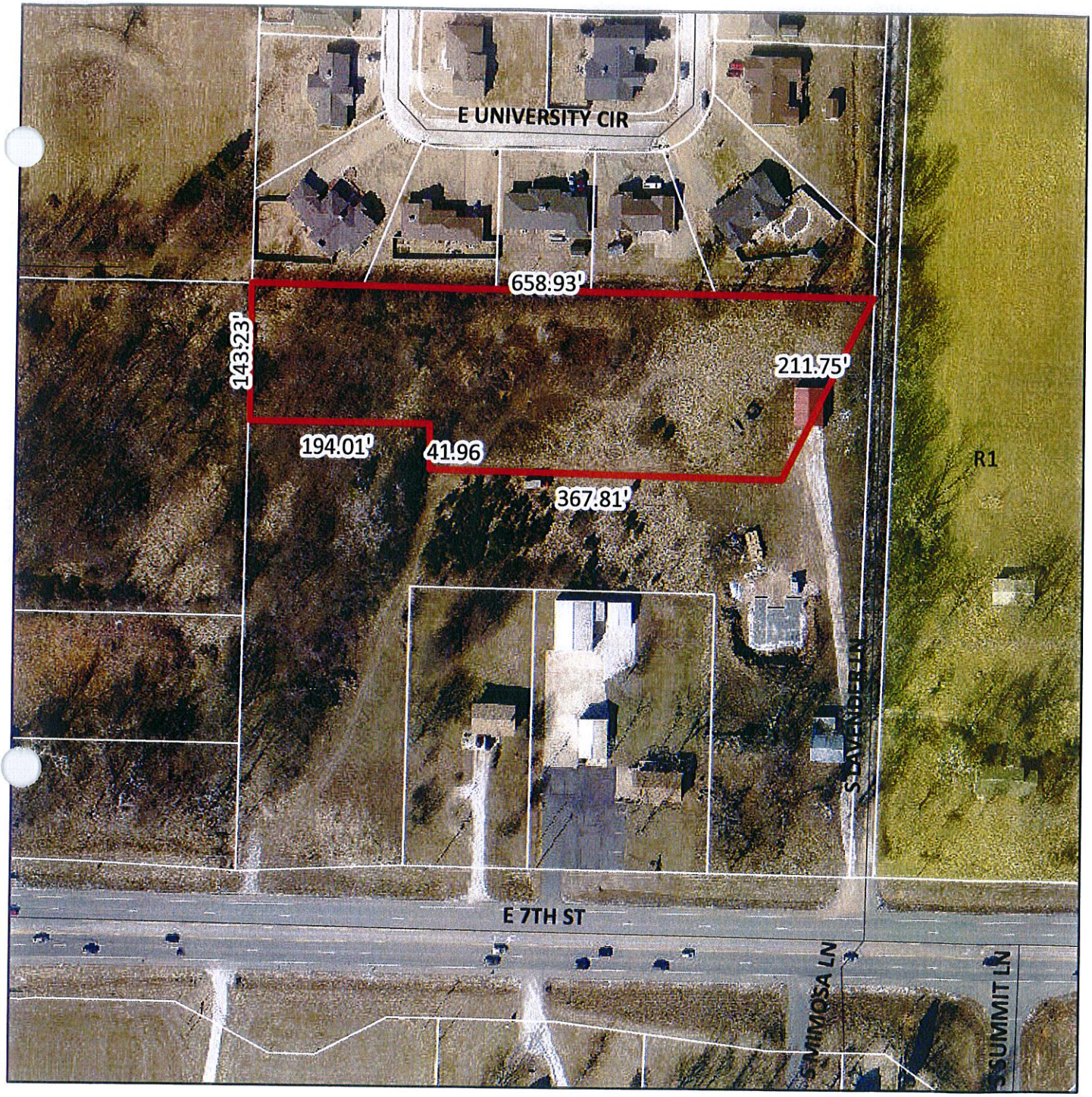

0 0.0475 0.095 0.19 Miles

Case 018-15: Northwest corner of 7th Street and Lavender Lane - A request to voluntarily annex 2.42 acres into the corporate limits of the City of Joplin - Aaron Garman.

N

Case 018-15: Northwest corner of Seventh Street and Lavender Lane – A request to voluntarily annex 2.42 acres into the corporate limits of the City of Joplin – Aaron Garman.

Mr. Eastman opened the public hearing for Case 018-15.

Mr. Garman was not present at this point. Ms. Cunningham stated this is property Mr. Garman owns that is bounded by Joplin and Duquesne. He would like to annex into the City of Joplin for access to city sewer and other utilities. The property is adjacent to Joplin's current city limits.

Mr. Smith asked if East University Circle lies within the City of Joplin, and Mr. Bolander replied it is outside the Joplin city limits.

Mr. Smith asked about the properties to the south along Seventh Street, and Ms. Cunningham replied they are not currently in Joplin. Mr. Garman owns the horseshoe-shaped portion surrounding those properties and is planning to construct his personal home there.

Mr. Bolander stated the property to the east lies in the City of Joplin. University Circle lies in Duquesne, but Tall Grass Estates is in the City of Joplin.

Mr. Aaron Garman, 674 Lavender Lane, Joplin, appeared at this time and requested the annexation of the property in Case 018-15.

Mr. Duncan asked Mr. Garman if he plans to build a residence on this property, and he replied yes.

Mr. Duncan asked if the property will automatically be zoned R-1, and Mr. Bolander replied yes. All annexed property comes into the City of Joplin with R-1 zoning since it is the most protected zoning classification.

Mr. Eastman asked for comments from the commissioners and the audience, and none were received. He then closed the public hearing for Case 018-15.

MR. SMITH MOVED, SECONDED BY MR. RAMSOUR, THAT CASE 018-15 BE FORWARDED TO THE CITY COUNCIL WITH RECOMMENDATION FOR APPROVAL, BASED UPON THE COMMENTS RECEIVED IN THE PLANNING REPORT AND DURING THE PUBLIC HEARING. THE MOTION CARRIED, WITH MR. BROWN, MR. CORTEZ, MR. DERMOTT, MR. DUNCAN, MR. EASTMAN, MR. RAMSOUR, AND MR. SMITH VOTING "AYE" (7 IN FAVOR, 0 ABSENT).

City of **JOPLIN** City Council Agenda Item

Requested Council Meeting Date: October 5, 2015

Item: COUNCIL BILL NO. 2015-271
Originating Department: PLANNING & COMMUNITY DEVELOPMENT

Attachments: 1) Copy of Council Bill
2) Planning Report
3) Commission Minutes

Planning/Community Development Manager: Troy Bolander
City Attorney: Peter C. Edwards
City Manager: Samuel L. Anselm
Board or Commission: Planning and Zoning Commission Date: 9/14/2015

Recommended Action: Planning and Zoning Commission recommended denial by a vote of "7 in favor, 0 absent"

SUMMARY/REQUEST:
Case 030-15: Southeast corner of Shady Lane and Silver Creek Drive – A request to rezone from R-1 (Single-Family Residential) to R-2 (Two-Family Residential) – Charles Ward.

STAFF SUMMARY:
These lots are large, matching the size of most of the lots in the neighborhood. Silver Creek was not annexed into the City of Joplin until 2013 and has a much lower residential density than most other residential neighborhoods in Joplin. The houses are mostly large, over 2000 square feet, on lots that are far above our minimum requirements. Creating higher density housing in the middle of this neighborhood does not follow our future land use map, which shows the area as low-density residential. Additionally, the two lots, once zoned R-2, would create an isolated zoning district within the neighborhood.

Staff recommends denial of Case 030-15.

PLANNING & ZONING COMMISSION TESTIMONY:
Mr. Charles Ward requested the rezoning of property in Case 030-15. He is requesting rezoning to District R-2 for high-end duplexes in the area. He and his son have been builders for many years, with his son receiving pre-approval for financing to construct these duplexes. They previously requested rezoning for duplexes from another entity, who denied their request.

Mr. Duncan asked Mr. Ward if he previously requested rezoning from the Joplin City Council, and he replied no. He requested rezoning through the Village of Silver Creek. He and his son have recently built their homes in Silver Creek, with those being the only new homes in this area. They are willing to invest a lot of money into a community that is very stagnant.

Mr. Ward expressed concern about the lack of growth and thought the residents of Silver Creek should be asking him and his son what can be done to increase their property values. Several homes in Silver Creek have been for sale for some time due to stagnant property values.

Mr. Justin Ward operates JW Construction and has constructed duplexes for several contractors. He discussed the interest in this town for duplexes versus homes.

The Wards' have purchased a large piece of property that has been undeveloped for quite some time. His goal is not to upset anybody in Silver Creek. The area may still have the name of Silver Creek, but they are now in Joplin. He stated two properties bringing in two building permits and two utility bills will not do Joplin any favors versus five to seven projects he could put on that property, with all of them being over $200,000 projects.

The Wards' want to dictate what the tenants do when they move in and will provide full maintenance including lawn care. The front façade of the duplexes will be full masonry. The trees on the property will remain.

This property is 600 to 700 feet long and 140 feet deep and has a lot of potential. Constructing properties that are bringing in money will benefit the City of Joplin. Rental property is the most beneficial thing at this time, with some renters potentially purchasing property in this area. Mercy Hospital employees may want to come to Silver Creek.

The development will consist five duplexes without a water retention pond, but there is sufficient space for six or seven duplexes.

PUBLIC COMMENT:
Comments in opposition were received from the following:

Mr. Gordon Sweeton, 4403 Malaura Lane, Joplin
Mr. John Powell, 4402 Malaura Lane, Joplin
Ms. Linda Lindquist, 4510 Shady Lane, Joplin
Mr. Dan Miller, 4401 Malaura Lane, Joplin
Mr. James Wardell, 4415 Hickory Lane, Joplin
Mr. Todd Zarr, 4507 Shady Lane, Joplin

They expressed concern about decreased single-family residential property values if duplexes are constructed, traffic issues, and who would live in the duplexes. They stated there are no existing duplexes and very little rental property in Silver Creek, and they expressed concern about five to seven duplexes being planned for the property.

About 40 persons expressed their opposition to the Planning and Zoning Commission, with 98 petitions of protest being filed.

P & Z Case 030-15
Charles Ward
(P & Z Recommended Denial)

COUNCIL BILL NO. 2015-271 ORDINANCE NO.

AN ORDINANCE amending Ordinance No. 2004-256, passed by the Council of the City of Joplin, Missouri, November 15, 2004, by removing from District R-1 and including in District R-2 property as described below and located at the southeast corner of Shady Lane and Silver Creek Drive in the City of Joplin, Newton County, Missouri.

NOW, THEREFORE, BE IT ORDAINED BY THE COUNCIL OF THE CITY OF JOPLIN, MISSOURI, as follows:

Section 1. Having referred the subject matter of this ordinance to the City Planning and Zoning Commission and having given at least fifteen days' notice of time and place of hearing on same by publication in the Joplin Globe, Ordinance No. 2004-256 is hereby amended by removing the following described property from District R-1 and including same in District R-2:

ALL OF LOTS NUMBERED ONE (1) AND TWO (2), IN REX H. BIGGS SUB-DIVISION IN THE VILLAGE OF SILVER CREEK, NEWTON COUNTY, MISSOURI, ACCORDING TO THE RECORDED PLAT THEREOF.

Section 2. That the City Clerk is hereby ordered to file this ordinance with the Zoning District Map maintained in her office and to note the changes herein provided for thereon.

PASSED BY THE COUNCIL OF THE CITY OF JOPLIN, MISSOURI, this the _____ day of _____, 2015, by a vote of _____.

_____
Michael L. Seibert, Mayor

ATTEST:

_____
Barbara L. Hogelin, City Clerk

APPROVED AS TO FORM:

_____
Peter C. Edwards, City Attorney

Z&P Meeting: September 14, 2015
City Council Meeting: October 5, 2015

STAFF PLANNING REPORT
Rezoning

Case 030-15: A request to rezone from R-1 (Single-Family Residential) to R-2 (Two-Family Residential)

LOCATION: Southeast corner of Shady Lane and Silver Creek Drive

APPLICANT: Charles Ward

EXISTING CONDITIONS:

Zoning	Land Use	Property Size
R-1 (Single-Family Residential)	Undeveloped	3.8 acres

SITE CONTEXT:

	North	East	South	West
Existing Zoning	R-1	R-1	R-1	R-1
Land Use	Single-Family Residential	Single-Family Residential	Single-Family Residential	Single-Family Residential

FUTURE LAND USE:

The City of Joplin's future land use map classifies this area as low-density residential development.

TRANSPORTATION:

Streets with access	Classification	Right-of-way width
Silver Creek Drive	Secondary	70'
Shady Lane	Secondary	50'

UTILITIES: The property has utility connections.

FLOOD PLAIN: N/A

STAFF ANALYSIS:

CONSISTENT WITH DEVELOPMENT POLICIES OF THE COMPREHENSIVE PLAN?

No. This area is classified as low-density residential in our Comprehensive Plan. Additionally, this could create an isolated zoning area that does not match the character of the neighborhood.

THE SUITABILITY OF THE SUBJECT PROPERTY FOR THE USES TO WHICH IT HAS BEEN RESTRICTED

Mr. Ward would like to construct duplexes on the property to attract renters to the Silver Creek area; in order to do so, the zoning classification must be R-2, Two-Family Residential. Currently these lots are zoned R-1, Single-Family Residential, and do not accommodate the construction of duplexes.

THE EXTENT THAT THE ZONING CHANGE WILL DETRIMENTALLY AFFECT NEARBY PROPERTY

A higher density residential zoning designation could potentially affect nearby property adversely. Neighbors have expressed concern regarding rental property in their neighborhood, as well as duplexes in the middle of a single-family neighborhood.

DISCUSSION

These lots are large, matching the size of most of the lots in the neighborhood. Silver Creek was not annexed into the City of Joplin until 2013 and has a much lower residential density than most other residential neighborhoods in Joplin. The houses are mostly large, over 2000 square feet, on lots that are far above our minimum requirements. Creating higher density housing in the middle of this neighborhood does not follow our future land use map, which shows the area as low-density residential. Additionally, the two lots, once zoned R-2, would create an isolated zoning district within the neighborhood.

Staff recommends denial of Case 030-15.

ENCLOSURES:

Map.

REZONING APPLICATION FORM

RECEIVED 7-24-15

Return Form to:
Planning / Community Development Specialist.
Joplin City Hall
602 South Main Street
Joplin, Missouri 64801
417-624-0820 Ext. 511
FAX 417-625-4738

For Office Use Only
Case No.: 030-15
Filing Fee: $350.00
Date Advertised: 8-30-15
Date Notices Sent: 8-31-15
P&Z Date: 9-14-15
City Council Date: 10-5-15

APPLICANT: CHARLES E. WARD PHONE: 417-850-5254
ADDRESS: 4245 RUBY LANE JOPLIN, MO ZIP: 64804
EMAIL: -
OWNER: JUSTIN & ANDREA WARD PHONE: 417-540-4091
ADDRESS: 3200 TERRACE DRIVE ZIP:
EMAIL: -
LOCATION OF PROPERTY: SILVER CREEK DR. TO SHADY LANE LOT 1 & 2
LEGAL DESCRIPTION: Lots 1 & 2 of Blk #. Briggs addition

Present Zoning R-1 Requested Zoning: R-2 Acreage:
Present Use of Property: NONE - TIMBER (WOODS)
Proposed Use of Property: DUPLEX HOUSING

SURROUNDING LAND USE AND ZONING:

	Land Use	Zoning
North	Residential	R-1
South	Residential	R-1
East	Residential	R-1
West	Residential	R-1

CHARACTER OF THE NEIGHBORHOOD: Residential

RELATIONSHIP TO EXISTING ZONING PATTERN:

1. Would proposed change create a small, isolated district unrelated to surrounding districts?
   No - still residential
2. Are there substantial reasons why the property cannot be used in accord with existing zoning?
   If yes, explain: Yes - only allows single family houses

CONFORMANCE WITH COMPREHENSIVE PLAN:

1. Consistent with Development Policies? Yes
2. Consistent with Future Land Use Map?

THE FOLLOWING MUST ACCOMPANY YOUR APPLICATION:

1. One copy of a legal description of the property proposed to be rezoned.
2. One copy of a statement describing the reasoning for the rezoning, the impact of the proposed change, including any traffic conditions that may result; any danger from fire hazards; how the proposed change may effect the character of the surrounding properties; and how the proposed change will benefit the City of Joplin.
3. Owner Affidavit, if applicant applying for the rezoning is not the owner of the property be rezoned
4. For Planned Developments the following must be submitted and reviewed before the rezoning can be advertised for public hearing:
   ___ Site Plan ___ Landscape Plan ___ Building Elevations

TRAFFIC CONDITIONS:

1. Street(s) with Access to Property: Shady Lane, Silver Creek Dr
2. Classification of Street(s):
   Arterial See Collector ____ Local Secondary
3. Right-of-Way Width: ____
4. Will turning movements caused by the proposed use create an undue traffic hazard?
   No

IS PLATTING OR REPLATTING REQUIRED TO PROVIDE FOR:

1. Appropriately Sized Lots? No
2. Properly Sized Street Right-of-Way? No
3. Drainage Easements? No
4. Utility Easements:
   - Electricity? No
   - Gas? No
   - Sewers? No
   - Water? No
5. Additional Comments: None.

UNIQUE CHARACTERISTIC OF PROPERTY AND ADDITIONAL COMMENT:

SIGNATURE: Charles E. Ward DATE: 7-24-15

BY: Charles E. Ward

TITLE: ____

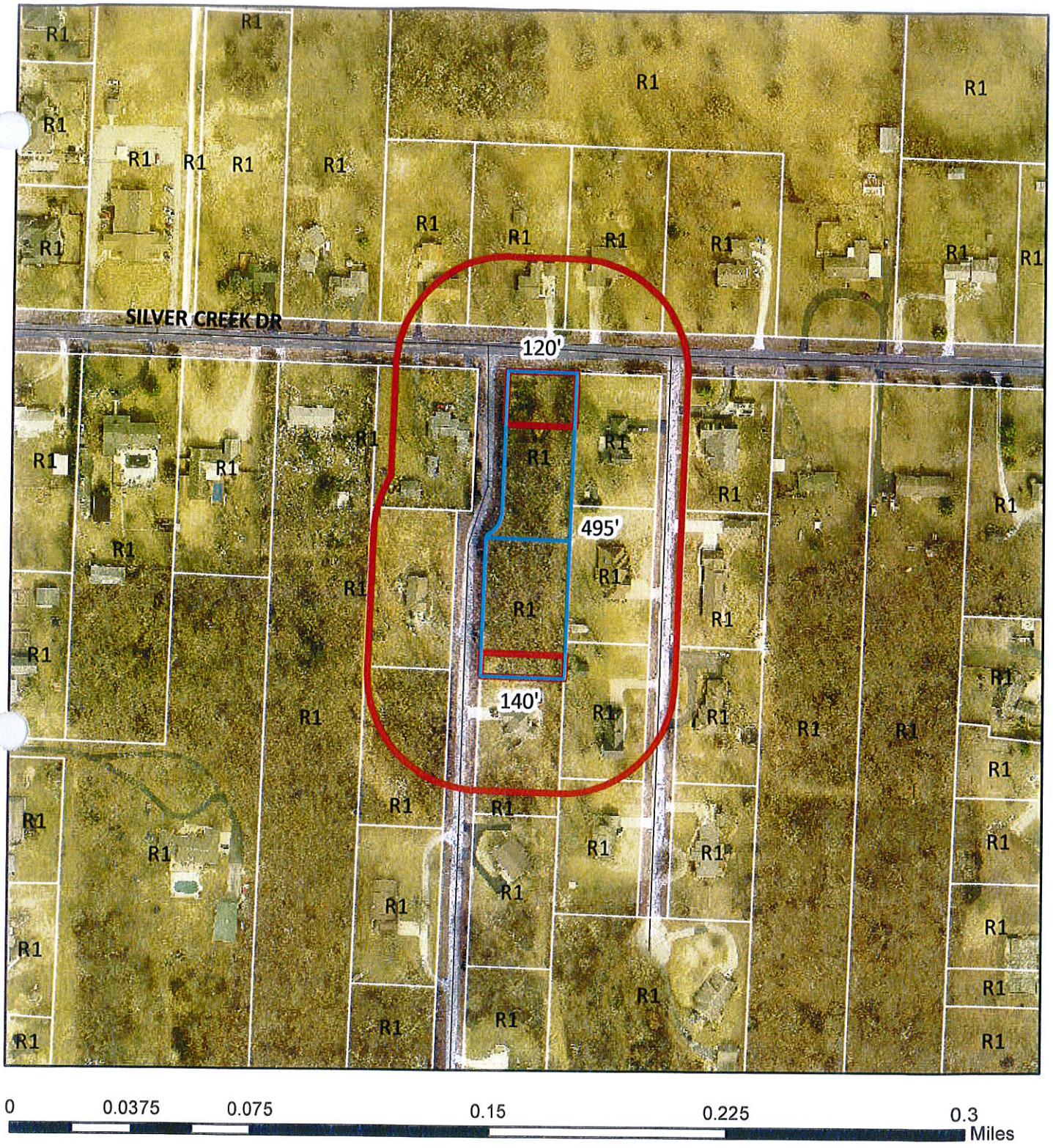

Case 030-15: The Southeast corner of Silver Creek Drive and Shady Lane - A request to rezone from R-1 (Single-Family Residential) to R-2 (Two-Family Residential) for the construction of duplexes - Charles Ward.

N

Case 030-15: Southeast corner of Shady Lane and Silver Creek Drive – A request to rezone from R-1 (Single-Family Residential) to R-2 (Two-Family Residential) – Charles Ward.

Mr. Eastman opened the public hearing for Case 030-15.

Mr. Charles Ward, 4245 Robb Lane, Joplin, appeared to request the rezoning of property in Case 030-15. He is a general contractor in the Joplin and in Duquesne. He is requesting rezoning to District R-2 for high-end duplexes in the area. He and his son have been builders for many years, with his son receiving pre-approval through SMB Bank for $200,000 to construct these duplexes. They previously requested rezoning for duplexes from another entity, who denied their request.

Mr. Duncan asked Mr. Ward if he previously requested rezoning from the Joplin City Council, and he replied no. He previously requested rezoning for duplexes through the Village of Silver Creek. He and his son have recently built their homes in Silver Creek, with those being the only new homes being built in this area. They are willing to put forth a big effort and a lot of money to invest into a community that is very stagnant.

Mr. Ward expressed concern about the area not having any growth. He thought the residents of Silver Creek should be asking him and his son what can be done to increase their property values. Several homes in Silver Creek have been for sale for some time due to stagnant property values.

Mr. Justin Ward, 3200 Terrace Drive, Joplin, operates JW Construction and has constructed duplexes for Mayberry Construction, Gary Rose, and several other contractors. He discussed the interest in this town for duplexes versus homes.

Mr. Ward purchased a large piece of property that has been undeveloped for quite some time. His goal is not to upset anybody in Silver Creek. The area may still have the name of Silver Creek, but they are now in Joplin. He stated two properties bringing in two building permits and two utility bills will not do Joplin any favors versus five to seven projects he could put on that property, with all of them being over $200,000 projects.

Mr. Ward would not construct a low-end project in Silver Creek. He wants to dictate what the tenants do when they move in. He will provide full maintenance including lawn care. The front façade of the duplexes will be full masonry. He has a lot of building experience and knows what the duplexes need to look like. His development will bring some growth toward the southern part of Joplin. The trees on the property will remain.

Mr. Ward stated his property is 600 to 700 feet long and 140 feet deep and has a lot of potential. Constructing properties that are bringing in money will benefit the City of Joplin. He sees rental property as being the most beneficial thing at this time, with some renters potentially purchasing property in this area. Mercy Hospital employees may want to come to Silver Creek.

Mr. Duncan asked Mr. Ward how many duplexes he is projecting for the property. He replied five duplexes without a water retention pond. Once he sees how things progress, and a professional engineer looks at the water retention, he believes he has sufficient space for six or seven duplexes. His goal is to construct five duplexes.

Mr. Duncan asked Mr. Ward if he is aware that 98 protest petitions have been filed, and he understood many of the area residents were opposed to the request.

Mr. Eastman asked for comments from the audience.

Mr. Gordon Sweeton, 4403 Malaura Lane, Joplin, appeared in opposition and thanked the commissioners for allowing the residents to attend the meeting and express their opposition to this rezoning. He has no personal animosity against the builders, but the residents express concern about decreased property values if duplexes are constructed in this area. They have visited with realtors who have informed them their residential property values will decrease.

Mr. Sweeton stated 80 percent of the homes in Silver Creek are owner-occupied homes, with most of the residents residing there 15 to 30 years. They moved there because Silver Creek had restrictions where duplexes or housing projects could not be built. Trailer houses were also not allowed. They were assured those restrictions would apply even after they became a part of Joplin.

Mr. Sweeton stated many senior citizens have had their homes in Silver Creek for a long time. He discussed the meeting with Village of Silver Creek where Mr. Ward got perturbed because he couldn't speak and do what he wanted to do. He tried to intimidate the Silver Creek residents by stating if he was not able to rezone the property for duplexes, he would put a "crack house" in there. That doesn't affect just the area property owners but affects the whole City of Joplin.

Mr. Sweeton expressed concern about who would live in the duplexes. The residents are strongly opposed to the rezoning of this property, and they would respectfully request that the Planning and Zoning Commission deny this request.

Mr. Duncan asked Mr. Sweeton if there are any other duplexes to his knowledge in Silver Creek, and he replied no.

Mr. Duncan stated Mr. Sweeton made references that when Silver Creek was annexed into the City of Joplin, the residents were told previous covenants or restrictions would be kept. Mr. Duncan asked Mr. Bolander if there is any record of that.

Mr. Bolander stated the City of Joplin does not enforce private covenants, as any deed restrictions or private covenants are enforced by homeowners' associations. The property is zoned R-1, so the only thing that can be built at this time are single-family homes. The property came into the City of Joplin with R-1 single-family residential zoning, with that being the restriction at this time.

Mr. Cortez asked when Silver Creek was incorporated into the city limits of Joplin, and Mr. Bolander replied during 2013.

Mr. Ramsour asked Mr. Sweeton to request those in the audience who are opposed to this request to stand. About 40 persons stood to express their opposition.

Mr. John Powell, 4402 Malaura Lane, Joplin, appeared in opposition and stated his property is directly behind the area that Mr. Ward is wanting to rezone. Mr. Powell has resided in this area for 22 years and has always known someone would build something behind him, but he expected it to

be a house similar to his. He lives on a street containing 3,000 to 4,000 square foot homes and didn't expect to have a duplex right behind him.

Mr. Powell stated Mr. Ward alluded to the fact that he was planning to construct senior housing. Mr. Powell stated no public transportation is available to that area. The streets have very narrow shoulders and don't have sidewalks. There are no local shopping areas for seniors. Mr. Powell is not opposed to Mr. Ward building houses comparable to what is in the area.

Mr. Ramsour asked Mr. Powell if he lives directly east or south of the property in this request, and he replied directly east. He resides along Silver Creek Drive, with Malaura being the next street east from Shady Lane. He expressed concern about decreased property values with duplexes behind him. He stated the reason many residents purchased homes in Silver Creek was because no trailers or duplexes were in the area, along with very little rental property.

Mr. Eastman asked Mr. Powell if Mr. Ward ever proposed a floor plan for what he was planning to build. Mr. Powell stated the meeting with the Village of Silver Creek was actually for petition signing and wasn't actually a meeting. Mr. Ward did not visit with any of the neighbors and inform them about his plans to construct duplexes. The residents learned about the request when they received the letters from the City of Joplin.

Ms. Linda Lindquist, 4510 Shady Lane, Joplin, appeared in opposition and has resided in Silver Creek since 1990 and described this area as being in the country. She saw the signage on the property and does not want duplexes. She wants to keep the area the way that it is and wants to go on record as a homeowner in Silver Creek Village in opposition to this request since the property is almost in her front yard.

Mr. Dan Miller, 4401 Malaura Lane, Joplin, appeared in opposition and stated he resides directly across the street from John Powell. Mr. Miller did not attend the Silver Creek meeting but did submit a protest petition. He learned that Mr. Ward conveyed that he was planning construction of two duplexes, and now at this meeting he is hearing a minimum of five duplexes and possibly even seven duplexes. With the distance that's involved on that property from north to south, those duplexes will be basically wall-to-wall and end up in an apartment style environment.

Mr. James Wardell, 4415 Hickory Lane, Joplin, appeared in opposition and stated he lost his home on Bedford Place to a fire and looked for housing all over Joplin and settled in Silver Creek. The reason he settled there was because of the single-family dwellings, the country, and the trees.

Mr. Todd Zarr, 4507 Shady Lane, Joplin, appeared in opposition and stated his property buts up directly to the proposed property. He moved to Silver Creek following the tornado because of the single-family dwellings and the nice country style location and the trees. He stated the duplexes will make a Shady Lane a throughway and a constant traffic hazard.

Mr. Eastman asked for additional comments from the commissioners and the audience, and none were received. He then closed the public hearing for Case 030-15.

MR. CORTEZ MOVED, SECONDED BY MR. DERMOTT, THAT CASE 030-15 BE FORWARDED TO THE CITY COUNCIL WITH RECOMMENDATION FOR DENIAL, BASED UPON THE COMMENTS RECEIVED IN THE PLANNING REPORT AND

DURING THE PUBLIC HEARING. THE MOTION CARRIED, WITH MR. BROWN, MR. CORTEZ, MR. DERMOTT, MR. DUNCAN, MR. EASTMAN, MR. RAMSOUR, AND MR. SMITH VOTING "AYE" (7 IN FAVOR, 0 ABSENT).

City of **JOPLIN** City Council Agenda Item

Requested Council Meeting Date: October 5, 2015

Item: COUNCIL BILL NO. 2015-272
Originating Department: PLANNING & COMMUNITY DEVELOPMENT

Attachments: 1) Copy of Council Bill
2) Planning Report
3) Commission Minutes

Planning/Community Development Manager: Troy Bolander
City Attorney: Peter C. Edwards
City Manager: Samuel L. Anselm
Board or Commission: Planning and Zoning Commission Date: 9/14/2015

Recommended Action: Planning and Zoning Commission recommended approval by a vote of "7 in favor, 0 absent"

SUMMARY/REQUEST:
Case 031-15: 1831 New Hampshire Avenue – A request to rezone from R-1 (Single-Family Residential) to R-2 (Two-Family Residential) – Kelley Knox.

STAFF SUMMARY:
This area is a mix of low-density and moderate-density residential development which abut commercial uses along 20th street. This rezoning would match the character of the neighborhood by creating moderate-density housing near businesses and new development along the 20th street corridor.

Staff recommends approval of Case 031-15.

PLANNING & ZONING COMMISSION TESTIMONY:
Mr. Leonard Knox requested the rezoning of the property in Case 031-15. He owns a lot at 1831 New Hampshire that is currently zoned R-1. All the lots on that block are zoned R-2, with the lot being a perfect for a duplex.

Mr. Eastman asked Mr. Knox about the size of the duplex, and he replied two-bedroom, two-bath units with a single-car garage. Each living unit will contain about 1,400 square feet.

PUBLIC COMMENT:
None.

P & Z Case 031-15
Kelley Knox
(P & Z Recommended Approval)

COUNCIL BILL NO. 2015-272 ORDINANCE NO.

AN ORDINANCE amending Ordinance No. 2004-256, passed by the Council of the City of Joplin, Missouri, November 15, 2004, by removing from District R-1 and including in District R-2 property as described below and located at 1831 New Hampshire Avenue in the City of Joplin, Jasper County, Missouri.

NOW, THEREFORE, BE IT ORDAINED BY THE COUNCIL OF THE CITY OF JOPLIN, MISSOURI, as follows:

Section 1. Having referred the subject matter of this ordinance to the City Planning and Zoning Commission and having given at least fifteen days' notice of time and place of hearing on same by publication in the Joplin Globe, Ordinance No. 2004-256 is hereby amended by removing the following described property from District R-1 and including same in District R-2:

ALL OF THE SOUTH ONE-HALF OF LOTS NUMBERED SIX (6) AND SEVEN (7) IN J.W. RATCLIFFE'S SUBDIVISION, IN THE CITY OF JOPLIN, JASPER COUNTY, MISSOURI, ACCORDING TO THE RECORDED PLAT THEREOF.

Section 2. That the City Clerk is hereby ordered to file this ordinance with the Zoning District Map maintained in her office and to note the changes herein provided for thereon.

PASSED BY THE COUNCIL OF THE CITY OF JOPLIN, MISSOURI, this the _____ day of _____, 2015, by a vote of _____.

_____
Michael L. Seibert, Mayor

ATTEST:

_____
Barbara L. Hogelin, City Clerk

APPROVED AS TO FORM:

_____
Peter C. Edwards, City Attorney

Z&P Meeting: September 14, 2015
City Council Meeting: October 5, 2015

STAFF PLANNING REPORT
Rezoning

Case 031-15: A request to rezone from R-1 (Single-Family Residential) to R-2 (Two-Family Residential)

LOCATION: 1831 New Hampshire Avenue

APPLICANT: Kelley Knox

EXISTING CONDITIONS:

Zoning	Land Use	Property Size
R-1 (Single-Family Residential)	Undeveloped	10,286ft

SITE CONTEXT:

	North	East	South	West
Existing Zoning	R-2	R-1, R-2 PD	R-1	R-1
Land Use	Two-Family Residential	Single-Family Residential, Two-Family Residential Planned Development	Single-Family Residential	Single-Family Residential

FUTURE LAND USE:

The City of Joplin's future land use map classifies this area as low to moderate density residential.

TRANSPORTATION:

Streets with access	Classification	Right-of-way width
New Hampshire Ave	Secondary	50'
19th Street	Secondary	50'

UTILITIES: The property has utility connections.

FLOOD PLAIN: N/A

STAFF ANALYSIS:

CONSISTENT WITH DEVELOPMENT POLICIES OF THE COMPREHENSIVE PLAN?

Yes.

THE SUITABILITY OF THE SUBJECT PROPERTY FOR THE USES TO WHICH IT HAS BEEN RESTRICTED

The property owner would like to construct a duplex, but the current zoning only allows single-family residential homes.

THE EXTENT THAT THE ZONING CHANGE WILL DETRIMENTALLY AFFECT NEARBY PROPERTY

This zoning change will not negatively affect nearby property; there are many two-family residential lots in the area.

DISCUSSION

This area is a mix of low-density and moderate-density residential development which abut commercial uses along 20th street. This rezoning would match the character of the neighborhood by creating moderate-density housing near businesses and new development along the 20th street corridor.

Staff recommends approval of Case 031-15.

ENCLOSURES:

Map.

REZONING APPLICATION FORM

RECEIVED 7-29-15

Return Form to:
Planning / Community Development Specialist.
Joplin City Hall
602 South Main Street
Joplin, Missouri 64801
417-624-0820 Ext. 511
FAX 417-625-4738

For Office Use Only

Case No.: 031-15
Filing Fee: $ 350.00
Date Advertised: 8-30-15
Date Notices Sent: 8-31-15
Public Hearing Date: 9-14-15

APPLICANT: KELLEY KNOX PHONE: 417-691-5041
ADDRESS: 1511 E. 19th ZIP: 64804
OWNER: SELF PHONE:
ADDRESS: ZIP:
LOCATION OF PROPERTY: 1831 NEW HAMPSHIRE AVENUE
LEGAL DESCRIPTION: ALL OF SOUTH ONE HALF OF LOTS 6 & 7 IN RATCLIFFE'S SUBDIVISION IN THE CITY OF JOPLIN, JASPER COUNTY, MISSOURI

Present Zoning R-1 Requested Zoning: R2 Acreage: 0.242
Present Use of Property: VACANT LOT

SURROUNDING LAND USE AND ZONING:

	Land Use	Zoning
North	two family Residential	R-2
South	Residential	R-1
East	Residential	R-1
West	Residential	R-1

CHARACTER OF THE NEIGHBORHOOD: DUPLEXES, HOUSING AUTHORITY

RELATIONSHIP TO EXISTING ZONING PATTERN:

1. Would proposed change create a small, isolated district unrelated to surrounding districts?

2. Are there substantial reasons why the property cannot be used in accord with existing zoning? ___
   If yes, explain: Want to build Duplex instead of single

CONFORMANCE WITH COMPREHENSIVE PLAN:

1. Consistent with Development Policies? yes

2. Consistent with Future Land Use Map? yes

THE FOLLOWING MUST ACCOMPANY YOUR APPLICATION:

1. One copy of a legal description of the property proposed to be rezoned.
2. One copy of a statement describing the reasoning for the rezoning, the impact of the proposed change, including any traffic conditions that may result; any danger from fire hazards; how the proposed change may effect the character of the surrounding properties; and how the proposed change will benefit the City of Joplin.
3. Owner Affidavit, if applicant applying for the rezoning is not the owner of the property be rezoned

TRAFFIC CONDITIONS:

1. Street(s) with Access to Property: NEW HAMPSHIRE & 19th
2. Classification of Street(s):
   Arterial _____ Collector _____ Local Secondary
3. Right-of-Way Width: 50'
4. Will turning movements caused by the proposed use create an undue traffic hazard?
   NO

IS PLATTING OR REPLATTING REQUIRED TO PROVIDE FOR:

1. Appropriately Sized Lots? NO
2. Properly Sized Street Right-of-Way? No
3. Drainage Easements? No
4. Utility Easements:
   - Electricity? No
   - Gas? NO
   - Sewers? No
   - Water? No
5. Additional Comments: None

UNIQUE CHARACTERISTIC OF PROPERTY AND ADDITIONAL COMMENT:

SIGNATURE: Kelley Knox DATE: 7-28-15

BY: KELLEY KNOX

TITLE: OWNER



Case 031-15: 1831 New Hampshire – A request to rezone from R-1 (Single-Family Residential) to R-2 (Two-Family Residential) – Kelley Knox.

N

Case 031-15: 1831 New Hampshire Avenue – A request to rezone from R-1 (Single-Family Residential) to R-2 (Two-Family Residential) – Kelley Knox.

Mr. Eastman opened the public hearing for Case 031-15.

Mr. Leonard Knox, 1802 New Hampshire Avenue, Joplin, appeared to request the rezoning of the property in Case 031-15. He owns a lot at 1831 New Hampshire that is currently zoned R-1. All the lots on that block are zoned R-2, with the lot being a perfect for a duplex.

Mr. Eastman asked Mr. Knox about the size of the duplex, and he replied two-bedroom, two-bath units with a single-car garage. Each living unit will contain about 1,400 square feet.

Mr. Eastman asked for comments from the commissioners and the audience, and none were received. He then closed the public hearing for Case 031-15.

MR. DUNCAN MOVED, SECONDED BY MR. SMITH, THAT CASE 031-15 BE FORWARDED TO THE CITY COUNCIL WITH RECOMMENDATION FOR APPROVAL, BASED UPON THE COMMENTS RECEIVED IN THE PLANNING REPORT AND DURING THE PUBLIC HEARING. THE MOTION CARRIED, WITH MR. BROWN, MR. CORTEZ, MR. DERMOTT, MR. DUNCAN, MR. EASTMAN, MR. RAMSOUR, AND MR. SMITH VOTING "AYE" (7 IN FAVOR, 0 ABSENT).

City of **JOPLIN** City Council Agenda Item

Requested Council Meeting Date: October 5, 2015

Item: COUNCIL BILL NO. 2015-273
Originating Department: PLANNING & COMMUNITY DEVELOPMENT

Attachments: 1) Copy of Council Bill
2) Copy of Amended Council Bill
3) Planning Report
4) Commission Minutes

Planning/Community Development Manager: Troy Bolander
City Attorney: Peter C. Edwards
City Manager: Samuel L. Anselm
Board or Commission: Planning and Zoning Commission Date: 9/14/2015

Recommended Action: Planning and Zoning Commission recommended rezoning to District C-0-PD by a vote of "7 in favor, 0 absent"

SUMMARY/REQUEST:
Case 032-15: 729 West 32nd Street – A request to rezone from R-1 (Single-Family Residential) to C-1 (Neighborhood Commercial District) – Mary Sue and Steve Page.

STAFF SUMMARY:
Thirty-Second Street is one of our major corridors, with West 32nd street serving as a hub for our medical offices. With most of this area along 32nd being zoned for offices or institutions, this lot would be more appropriate with a commercial zoning. The 32nd street corridor has high traffic counts and can make it unattractive for low-density residential development and neighborhoods. Overall, this lot would be better suited for commercial development.

Staff recommends approval of Case 032-15.

PLANNING & ZONING COMMISSION TESTIMONY:
Mr. Steve Page requested the rezoning of his parents' property to commercial for a doctor's office or something similar since most of the surrounding properties are commercial, including the Freeman Hospital entrance. Mercy Clinic is to the west, with an abandoned house to the east. Dr. Kivett owns all the houses to the east to Sabra Avenue. That property is also for sale.

Mr. Page stated his parents resided at that location since 1961, with the noise level along 32nd Street not being conducive for residential uses. He hopes to convert this into a business property as time goes on for Joplin.

Mr. Ramsour asked Mr. Page about the demolition of the property to the east of his. He replied his aunt and uncle used to live in that house, which was severely damaged by the tornado.

Mr. Ramsour asked Mr. Page if that property is owned by Dr. Kivett, and he replied no. It is the only piece of property along the north side of 32nd Street that is not owned by Dr. Kivett.

Mr. Smith asked Mr. Page if he would be opposed to rezoning to District C-0-PD, and he replied he would not be opposed to that. He asked if that would still allow a doctor's office.

Mr. Bolander stated the major difference between District C-0 and District C-1 is that C-0 is non-retail zoning. Almost all the current zoning classification in that area is C-0, which allows for doctors' offices and anything medical related. Mr. Page stated that would be sufficient.

Mr. Eastman stated the "PD" designation just means the development plans need to be approved by the Planning and Zoning Commission and the City Council.

PUBLIC COMMENT:
None.

P & Z Case 032-15
Mary Sue and Steve Page
(P & Z Recommended Rezoning to District C-0-PD)

COUNCIL BILL NO. 2015-273 ORDINANCE NO.

AN ORDINANCE amending Ordinance No. 2004-256, passed by the Council of the City of Joplin, Missouri, November 15, 2004, by removing from District R-1 and including in District C-1 property as described below and located at 729 West 32nd Street in the City of Joplin, Jasper County, Missouri.

NOW, THEREFORE, BE IT ORDAINED BY THE COUNCIL OF THE CITY OF JOPLIN, MISSOURI, as follows:

Section 1. Having referred the subject matter of this ordinance to the City Planning and Zoning Commission and having given at least fifteen days' notice of time and place of hearing on same by publication in the Joplin Globe, Ordinance No. 2004-256 is hereby amended by removing the following described property from District R-1 and including same in District C-1:

ALL OF THE WEST ONE HUNDRED (100) FEED OF LOT NUMBERED SIXTY-NINE (69) IN THE MOHASKA SUB-DIVISION TO THE CITY OF JOPLIN, JASPER COUNTY, MISSOURI, ACCORDING TO THE RECORDED PLAT THEREOF, EXCEPT A TRACT OF GROUND DESCRIBED AS FOLLOWS: BEGINNING AT A POINT IN THE SOUTH LINE A DISTANCE OF 50.67 FEET EAST OF THE SOUTHWEST CORNER OF LOT NUMBERED SIXTY-NINE (69), THENCE WEST AND NORTH ON A CURVE TO THE RIGHT WITH A RADIUS OF 50.0 FEET TO A POINT IN THE WEST LINE OF SAID LOT NUMBERED 69, AT A POINT 50.67 FEET NORTH OF THE SOUTHWEST CORNER; THENCE SOUTH ON THE WEST LINE OF SAID LOT TO THE SOUTHWEST CORNER; THENCE EAST 50.67 FEET TO THE POINT OF BEGINNING. SAID TRACT BEING FOR THE USE OF THE PUBLIC FOR STREET PURPOSES.

Section 2. That the City Clerk is hereby ordered to file this ordinance with the Zoning District Map maintained in her office and to note the changes herein provided for thereon.

PASSED BY THE COUNCIL OF THE CITY OF JOPLIN, MISSOURI, this the _____ day of _____, 2015, by a vote of _____.

_____
ATTEST: Michael L. Seibert, Mayor

_____
Barbara L. Hogelin, City Clerk

APPROVED AS TO FORM:

_____

Peter C. Edwards, City Attorney

P & Z Case 032-15
Mary Sue and Steve Page
(P & Z Recommended Rezoning to District C-0-PD)

AMENDED COUNCIL BILL NO. 2015-273 ORDINANCE NO.

AN ORDINANCE amending Ordinance No. 2004-256, passed by the Council of the City of Joplin, Missouri, November 15, 2004, by removing from District R-1 and including in District C-0-PD property as described below and located at 729 West 32nd Street in the City of Joplin, Jasper County, Missouri.

NOW, THEREFORE, BE IT ORDAINED BY THE COUNCIL OF THE CITY OF JOPLIN, MISSOURI, as follows:

Section 1. Having referred the subject matter of this ordinance to the City Planning and Zoning Commission and having given at least fifteen days' notice of time and place of hearing on same by publication in the Joplin Globe, Ordinance No. 2004-256 is hereby amended by removing the following described property from District R-1 and including same in District C-0-PD:

> ALL OF THE WEST ONE HUNDRED (100) FEED OF LOT NUMBERED SIXTY-NINE (69) IN THE MOHASKA SUB-DIVISION TO THE CITY OF JOPLIN, JASPER COUNTY, MISSOURI, ACCORDING TO THE RECORDED PLAT THEREOF, EXCEPT A TRACT OF GROUND DESCRIBED AS FOLLOWS: BEGINNING AT A POINT IN THE SOUTH LINE A DISTANCE OF 50.67 FEET EAST OF THE SOUTHWEST CORNER OF LOT NUMBERED SIXTY-NINE (69), THENCE WEST AND NORTH ON A CURVE TO THE RIGHT WITH A RADIUS OF 50.0 FEET TO A POINT IN THE WEST LINE OF SAID LOT NUMBERED 69, AT A POINT 50.67 FEET NORTH OF THE SOUTHWEST CORNER; THENCE SOUTH ON THE WEST LINE OF SAID LOT TO THE SOUTHWEST CORNER; THENCE EAST 50.67 FEET TO THE POINT OF BEGINNING. SAID TRACT BEING FOR THE USE OF THE PUBLIC FOR STREET PURPOSES.

Section 2. That the City Clerk is hereby ordered to file this ordinance with the Zoning District Map maintained in her office and to note the changes herein provided for thereon.

PASSED BY THE COUNCIL OF THE CITY OF JOPLIN, MISSOURI, this the _____ day of _____, 2015, by a vote of _____.

_____
ATTEST: Michael L. Seibert, Mayor

_____
Barbara L. Hogelin, City Clerk

APPROVED AS TO FORM:

_____

Peter C. Edwards, City Attorney

Z&P Meeting: September 14, 2015
City Council Meeting: October 5, 2015

STAFF PLANNING REPORT
Rezoning

Case 032-15: A request to rezone from R-1 (Single-Family Residential) to C-1 (Neighborhood Commercial District).

LOCATION: 729 W 32nd Street

APPLICANT: Steve Page

EXISTING CONDITIONS:

Zoning	Land Use	Property Size
R-1 (Single-Family Residential)	Residential	19,710 ft²

SITE CONTEXT:

	North	East	South	West
Existing Zoning	R-1 PD	R-1	C-O PD	CO
Land Use	Single-Family Residential, Planned Development	Single-Family Residential	Non-Retail Commercial, Planned Development	Non-Retail Commercial

FUTURE LAND USE:

This lot is situated between a low-density residential area and an office/institutional area.

TRANSPORTATION:

Streets with access	Classification	Right-of-way width
32nd Street	Major Arterial	100'
Jackson Avenue	Collector	55'

UTILITIES: The property has utility connections.

FLOOD PLAIN: N/A

STAFF ANALYSIS:

CONSISTENT WITH DEVELOPMENT POLICIES OF THE COMPREHENSIVE PLAN?

Yes.

THE SUITABILITY OF THE SUBJECT PROPERTY FOR THE USES TO WHICH IT HAS BEEN RESTRICTED

The property owner would like to sell this lot for commercial development rather than residential.

THE EXTENT THAT THE ZONING CHANGE WILL DETRIMENTALLY AFFECT NEARBY PROPERTY

Because of the lower-intensity of the commercial zoning, it will not detrimentally affect nearby property.

DISCUSSION

32nd Street is one of our major corridors, with West 32nd street serving as a hub for our medical offices. With most of this area along 32nd being zoned for offices or institutions, this lot would be more appropriate with a commercial zoning. The 32nd street corridor has high traffic counts and can make it unattractive for low-density residential development and neighborhoods. Overall, this lot would be better suited for commercial development.

Staff recommends approval of Case 032-15.

ENCLOSURES:

Map.

RECEIVED
8-4-15

REZONING APPLICATION FORM

Return Form to:
Planning / Community Development Specialist.
Joplin City Hall
602 South Main Street
Joplin, Missouri 64801
417-624-0820 Ext. 511
FAX 417-625-4738

For Office Use Only
Case No.: 032-15
Filing Fee: $350.00
Date Advertised: 8-30-15
Date Notices Sent: 8-31-15
P&Z Date: 9-14-15
City Council Date: 10-5-15

APPLICANT: Mary Sue Page / Steve Page POA PHONE: 417-439-7141
ADDRESS: 729 W 32ND ST Joplin MO ZIP: 64804
EMAIL: spage280@yahoo.com or steve@gotdc.com
OWNER: Mary Sue Page / Steve Page POA PHONE: 417-439-7141
ADDRESS: 5136 Magnolia Drive Joplin MO ZIP: 64801
EMAIL: spage280@yahoo.com or steve@gotdc.com
LOCATION OF PROPERTY: 729 W 32ND ST Joplin MO 64804
LEGAL DESCRIPTION: Residence with a 30'x40' Garage on a Storage Garage sitting on the corner of 32nd & Jackson

Present Zoning: R1 Requested Zoning: C1 Acreage: 22,000 Sq Ft
Present Use of Property: Residence
Proposed Use of Property: Doctor office, office space or Business

SURROUNDING LAND USE AND ZONING:

	Land Use	Zoning
North	Duplex's	RIPD
South	Commercial	COPD
East	Residencial Being Sold For Commercial	R1
West	Commercial	CD

CHARACTER OF THE NEIGHBORHOOD: Doctor offices & other offices to include Freeman Hospital & Mercy Clinics & Properties

RELATIONSHIP TO EXISTING ZONING PATTERN:

1. Would proposed change create a small, isolated district unrelated to surrounding districts?
   NO
2. Are there substantial reasons why the property cannot be used in accord with existing zoning? Yes
   If yes, explain: Properties Surrounding are 90% Business

CONFORMANCE WITH COMPREHENSIVE PLAN:

1. Consistent with Development Policies? Yes
2. Consistent with Future Land Use Map? Yes

THE FOLLOWING MUST ACCOMPANY YOUR APPLICATION:

1. One copy of a legal description of the property proposed to be rezoned.
2. One copy of a statement describing the reasoning for the rezoning, the impact of the proposed change, including any traffic conditions that may result; any danger from fire hazards; how the proposed change may effect the character of the surrounding properties; and how the proposed change will benefit the City of Joplin.
3. Owner Affidavit, if applicant applying for the rezoning is not the owner of the property be rezoned
4. For Planned Developments the following must be submitted and reviewed before the rezoning can be advertised for public hearing:
   N/A Site Plan N/A Landscape Plan N/A Building Elevations

TRAFFIC CONDITIONS:

1. Street(s) with Access to Property: JACKSON & W 32ND STREET
2. Classification of Street(s):
   Arterial 32ND Collector JACKSON Local _____
3. Right-of-Way Width: _____
4. Will turning movements caused by the proposed use create an undue traffic hazard?
   NO - LIGHTED INTERSECTION ALREADY

IS PLATTING OR REPLATTING REQUIRED TO PROVIDE FOR:

1. Appropriately Sized Lots? NO
2. Properly Sized Street Right-of-Way? NO
3. Drainage Easements? NO
4. Utility Easements:
   Electricity? NO
   Gas? NO
   Sewers? NO
   Water? NO
5. Additional Comments: _____

UNIQUE CHARACTERISTIC OF PROPERTY AND ADDITIONAL COMMENT:

SIGNATURE: _____ PBA DATE: 8-3-15

BY: _____

TITLE: _____

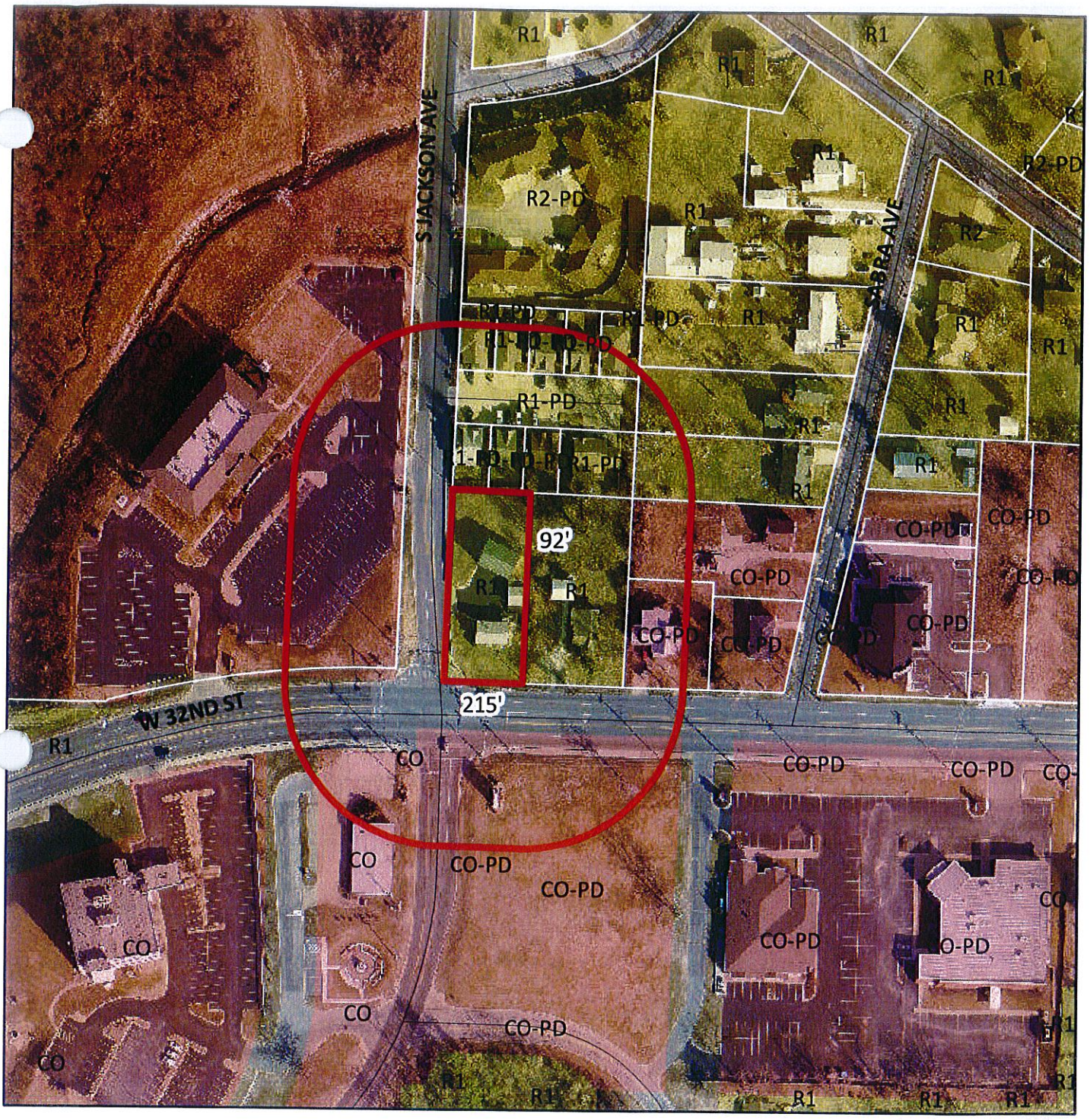

Case 032-15: 729 W 32nd – A request to rezone from R-1 (Single-Family Residential) to C-1 (Neighborhood Commercial District) – Mary Sue and Steve Page.

N

Case 032-15: 729 West 32nd Street – A request to rezone from R-1 (Single-Family Residential) to C-1 (Neighborhood Commercial District) – Mary Sue and Steve Page.

Mr. Eastman opened the public hearing for Case 032-15.

Mr. Steve Page, 729 West 32nd Street, Joplin, appeared to request the rezoning of his parents' property to commercial hopefully for a doctor's office or something similar since most of the surrounding properties are commercial, including the Freeman Hospital entrance. Mercy Clinic is to the west, with an abandoned house to the east. Dr. Kivett owns all the houses to the east to Sabra Avenue. That property is also for sale.

Mr. Page stated his parents resided at that location since 1961, with the noise level along 32nd Street not being conducive for residential uses. He hopes to convert this into a business property as time goes on for Joplin.

Mr. Ramsour asked Mr. Page about the demolition of the property to the east of his. He replied his aunt and uncle used to live in that house, which was severely damaged by the tornado.

Mr. Ramsour asked Mr. Page if that property is owned by Dr. Kivett, and he replied no. It is the only piece of property along the north side of 32nd Street that is not owned by Dr. Kivett.

Mr. Smith asked Mr. Page if he would be opposed to rezoning to District C-0-PD, and he replied he would not be opposed to that. He asked if that would still allow a doctor's office.

Mr. Bolander stated that the major difference between District C-0 and District C-1 is that C-0 is non-retail zoning. Almost all the current zoning classification in that area is C-0, which allows for doctors' offices and anything medical related. Mr. Page stated that would be sufficient.

Mr. Eastman stated the "PD" designation just means the development plans need to be approved by the Planning and Zoning Commission and the City Council.

Mr. Eastman asked for comments from the commissioners and the audience, and none were received. He then closed the public hearing for Case 032-15.

MR. SMITH MOVED, SECONDED BY MR. RAMSOUR, THAT CASE 032-15 BE AMENDED TO REZONE THE PROPERTY AT 729 WEST 32ND STREET FROM DISTRICT R-1 TO DISTRICT C-0-PD, BASED UPON THE COMMENTS RECEIVED IN THE PLANNING REPORT AND DURING THE PUBLIC HEARING. THE MOTION CARRIED, WITH MR. BROWN, MR. CORTEZ, MR. DERMOTT, MR. DUNCAN, MR. EASTMAN, MR. RAMSOUR, AND MR. SMITH VOTING "AYE" (7 IN FAVOR, 0 ABSENT).

MR. SMITH MOVED, SECONDED BY MR. DERMOTT, THAT CASE 0032-15 BE FORWARDED TO THE CITY COUNCIL WITH RECOMMENDATION FOR APPROVAL AS STATED IN THE PREVIOUS MOTION. THE MOTION CARRIED, WITH MR. BROWN, MR. CORTEZ, MR. DERMOTT, MR. DUNCAN, MR. EASTMAN, MR. RAMSOUR, AND MR. SMITH VOTING "AYE" (7 IN FAVOR, 0 ABSENT).

City of **JOPLIN** City Council Agenda Item

Requested Council Meeting Date: October 5, 2015

Item: COUNCIL BILL NO. 2015-274
Originating Department: PLANNING & COMMUNITY DEVELOPMENT

Attachments: 1) Copy of Council Bill
2) Planning Report
3) Commission Minutes

Planning/Community Development Manager: Troy Bolander
City Attorney: Peter C. Edwards
City Manager: Samuel L. Anselm
Board or Commission: Planning and Zoning Commission Date: 9/14/2015

Recommended Action: Planning and Zoning Commission recommended approval by a vote of "7 in favor, 0 absent"

SUMMARY/REQUEST:
Case 033-15: 1136 West 26th Street – A request to rezone from R-1 (Single-Family Residential) to R-2 (Two-Family Residential) – Donald Johnson.

STAFF SUMMARY:
Mr. Johnson would like to build a duplex on this property to serve future medical school, which will be a few blocks away. There is a mixture of low-density residential and commercial development in this area; a moderate-density residential lot could serve as a buffer between single family homes and commercial businesses. Although this corridor has been marked for office and institutional development, a two-family residential structure would fit within the character of this corridor.

Staff recommends approval of Case 033-15.

PLANNING & ZONING COMMISSION TESTIMONY:
Mr. Curtis King appeared representing Donald and Judy Johnson, the owners of the property in this request. They are requesting rezoning from District R-1 to District R-2 for the construction of duplexes to serve the medical students who are coming to Joplin. Each unit would contain three bedrooms and two baths.

Mr. Eastman asked Mr. Bolander about long-term plans for 26th Street. He stated the future land use map shows a light commercial designation along this corridor, with heavier commercial districts being located closer to Main Street and also near Maiden Lane.

PUBLIC COMMENT:
None; however, Mr. Bolander has received two petitions of protest concerning this request.

P & Z Case 033-15
Donald Johnson
(P & Z Recommended Approval)

COUNCIL BILL NO. 2015-274 ORDINANCE NO.

AN ORDINANCE amending Ordinance No. 2004-256, passed by the Council of the City of Joplin, Missouri, November 15, 2004, by removing from District R-1 and including in District R-2 property as described below and located at 1136 West 26th Street in the City of Joplin, Jasper County, Missouri.

NOW, THEREFORE, BE IT ORDAINED BY THE COUNCIL OF THE CITY OF JOPLIN, MISSOURI, as follows:

Section 1. Having referred the subject matter of this ordinance to the City Planning and Zoning Commission and having given at least fifteen days' notice of time and place of hearing on same by publication in the Joplin Globe, Ordinance No. 2004-256 is hereby amended by removing the following described property from District R-1 and including same in District R-2:

ALL OF LOT NUMBERED FORTY-FOUR (44) IN BRIARCLIFF ADDITION, IN THE CITY OF JOPLIN, JASPER COUNTY, MISSOURI, BEING SUBJECT TO ALL EASEMENTS, RIGHT-OF-WAYS, AND RESERVATIONS OF RECORD.

Section 2. That the City Clerk is hereby ordered to file this ordinance with the Zoning District Map maintained in her office and to note the changes herein provided for thereon.

PASSED BY THE COUNCIL OF THE CITY OF JOPLIN, MISSOURI, this the _____ day of _____, 2015, by a vote of _____.

_____
Michael L. Seibert, Mayor

ATTEST:

_____
Barbara L. Hogelin, City Clerk

APPROVED AS TO FORM:

_____
Peter C. Edwards, City Attorney

Z&P Meeting: September 14, 2015
City Council Meeting: October 5, 2015

STAFF PLANNING REPORT
Rezoning

Case 033-15: A request to rezone from R-1 (Single-Family Residential) to R-2 (Two-Family Residential District).

LOCATION: 1136 W 26th Street

APPLICANT: Donald Johnson

EXISTING CONDITIONS:

Zoning	Land Use	Property Size
R-1 (Single-Family Residential)	Undeveloped	11,869 ft²

SITE CONTEXT:

	North	East	South	West
Existing Zoning	R-1	R-1	C-O	CO PD
Land Use	Single-Family Residential	Single-Family Residential	Non-Retail Commercial	Dentist's Office

FUTURE LAND USE:

This area has been designated for office and institutional use.

TRANSPORTATION:

Streets with access	Classification	Right-of-way width
26th Street	Major Arterial	100'
Picher Avenue	Secondary	60'

UTILITIES: The property has utility connections.

FLOOD PLAIN: N/A

STAFF ANALYSIS:

CONSISTENT WITH DEVELOPMENT POLICIES OF THE COMPREHENSIVE PLAN?

Yes.

THE SUITABILITY OF THE SUBJECT PROPERTY FOR THE USES TO WHICH IT HAS BEEN RESTRICTED

The property owner would like to construct a duplex on this property which is not permitted with current zoning. This property would need to be rezoned to R-2 to allow duplexes.

THE EXTENT THAT THE ZONING CHANGE WILL DETRIMENTALLY AFFECT NEARBY PROPERTY

Although this is in an area that the Future Land Use map has designated Office and Institutional, a Two-Family Residential structure would not detrimentally affect nearby commercial development.

DISCUSSION

Mr. Johnson would like to build a duplex on this property to serve future medical school, which will be a few blocks away. There is a mixture of low-density residential and commercial development in this area; a moderate-density residential lot could serve as a buffer between single family homes and commercial businesses. Although this corridor has been marked for Office and Institutional development, a two-family residential structure would fit within the character of this corridor.

Staff recommends approval of Case 033-15.

ENCLOSURES:

Map.

REZONING APPLICATION FORM

RECEIVED 8-14-15
Received Money 8-25-15

Return Form to:
Planning / Community Development Specialist.
Joplin City Hall
602 South Main Street
Joplin, Missouri 64801
417-624-0820 Ext. 511
FAX 417-625-4738

For Office Use Only

Case No.: 033-15
Filing Fee: $ 350.00
Date Advertised: 8-30-15
Date Notices Sent: 8-31-15
Public Hearing Date: 9-14-15

APPLICANT: Donald & Judy Johnson PHONE: 417-317-3600
ADDRESS: 3901 County LN. 272 Joplin MO ZIP: 64801
OWNER: Donald & Judy Johnson PHONE:
ADDRESS: ZIP:
LOCATION OF PROPERTY: 1136 W 26th Joplin MO
LEGAL DESCRIPTION: All of Lot Numbered forty-four (44), in Brickcliff Addition, in the City of Joplin, Jasper County, Missouri, being subject to all easements, right-of-ways, and restrictions of record.

Present Zoning R1 Requested Zoning: R2 Acreage: 75' x 155'
Present Use of Property: Vacant

SURROUNDING LAND USE AND ZONING:

	Land Use	Zoning
North	Residential	R-1
South	Commercial	C-O
East	Residential	R-1
West	Commercial	CO-PD

CHARACTER OF THE NEIGHBORHOOD: Mixed Commercial & residential

RELATIONSHIP TO EXISTING ZONING PATTERN:

1. Would proposed change create a small, isolated district unrelated to surrounding districts? NO
2. Are there substantial reasons why the property cannot be used in accord with existing zoning? yes
   If yes, explain: Adding duplex to property

CONFORMANCE WITH COMPREHENSIVE PLAN:

1. Consistent with Development Policies? yes
2. Consistent with Future Land Use Map? yes

THE FOLLOWING MUST ACCOMPANY YOUR APPLICATION:

1. One copy of a legal description of the property proposed to be rezoned.
2. One copy of a statement describing the reasoning for the rezoning, the impact of the proposed change, including any traffic conditions that may result; any danger from fire hazards; how the proposed change may effect the character of the surrounding properties; and how the proposed change will benefit the City of Joplin.
3. Owner Affidavit, if applicant applying for the rezoning is not the owner of the property be rezoned

TRAFFIC CONDITIONS:

1. Street(s) with Access to Property: 26TH Street, Picher
2. Classification of Street(s):
   Arterial 26TH Collector _____ Local Picher
3. Right-of-Way Width: _____
4. Will turning movements caused by the proposed use create an undue traffic hazard?
   NO

IS PLATTING OR REPLATTING REQUIRED TO PROVIDE FOR:

1. Appropriately Sized Lots? NO
2. Properly Sized Street Right-of-Way? NO
3. Drainage Easements? NO
4. Utility Easements:
   - Electricity? NO
   - Gas? NO
   - Sewers? NO
   - Water? NO
5. Additional Comments: None

UNIQUE CHARACTERISTIC OF PROPERTY AND ADDITIONAL COMMENT:

N/A

SIGNATURE: Donald Johnson DATE: 8-14-15

BY: _____

TITLE: _____

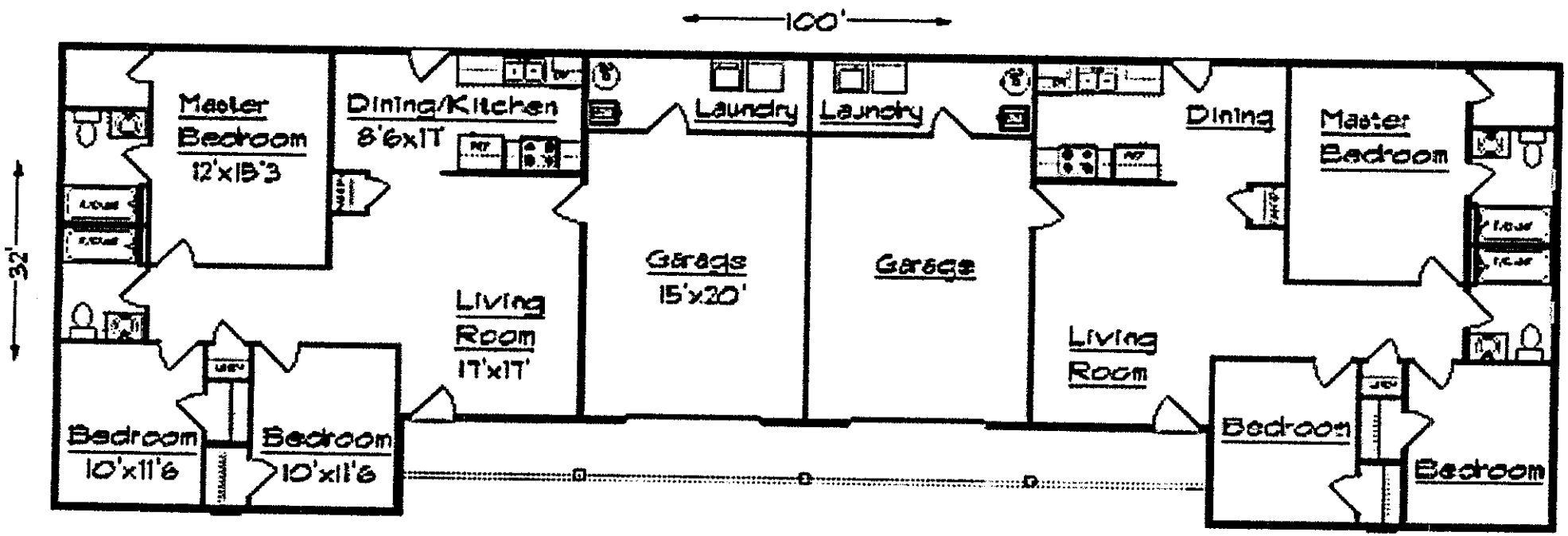
100'
32'
Master Bedroom 12'x15'3
Dining/Kitchen 8'6x17
Laundry
Laundry
Dining
Master Bedroom
Garage 15'x20'
Garage
Living Room 17'x17'
Living Room
Bedroom 10'x11'6
Bedroom 10'x11'6
Bedroom
Bedroom

Allgood

SCALE: ONE INCH EQUALS 20 FEET.
0 10 20 30 40

BASIS OF BEARINGS: The East line of Picher Avenue taken as North 02 Degrees, 23 Minutes, 46 Seconds East, as per Missouri West NAD83 per MODOT GPS Network.
CLASS OF PROPERTY:(C) Urban.
SOURCE DEED: Donald Johnson Book 1314, Page 1752

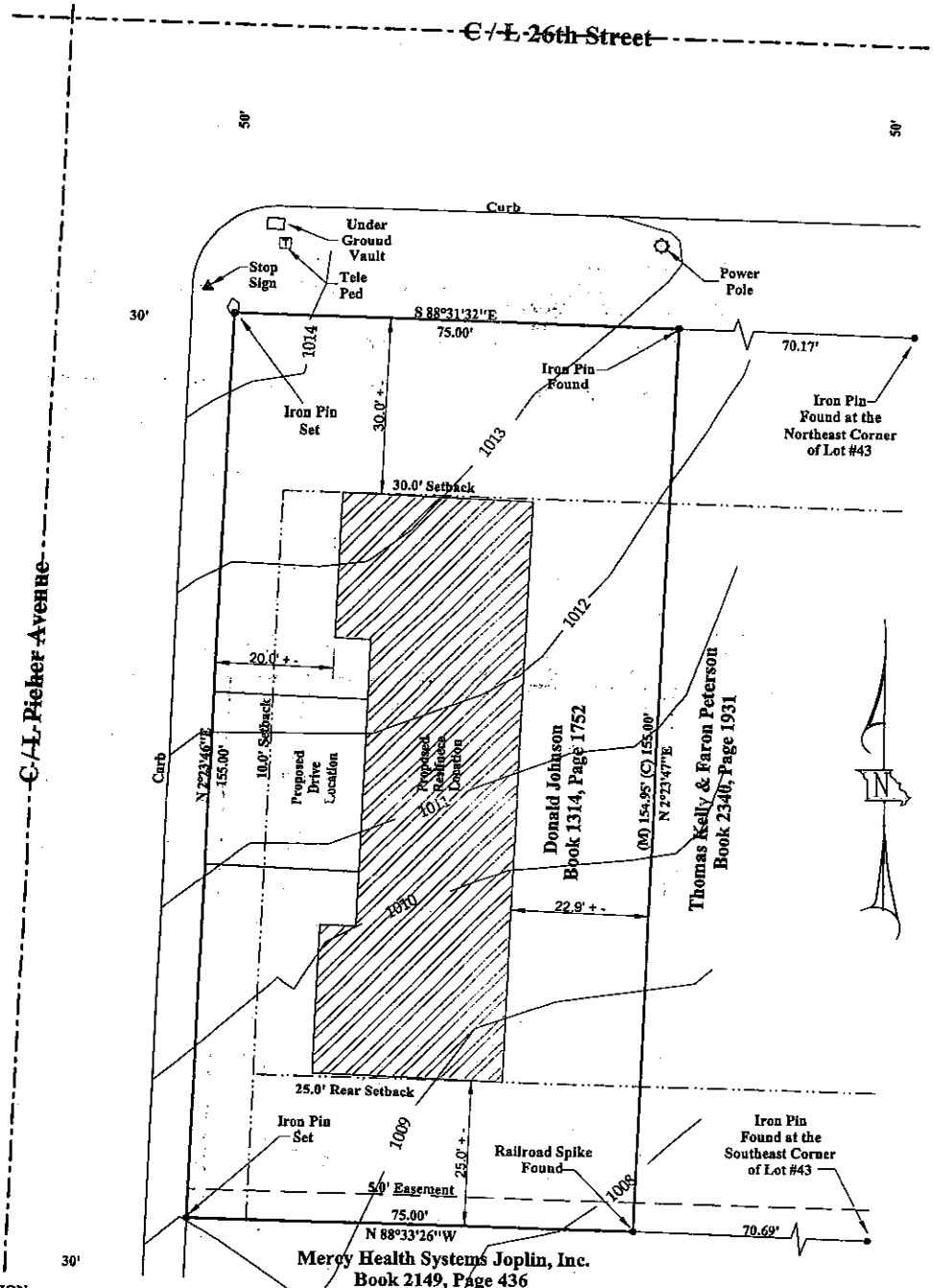

LEGAL DESCRIPTION:
All of Lot Numbered Forty-four (44),in Briarcliff Addition, in the City of Joplin, Jasper County, Missouri, Being subject to all easements, right-of-ways, and reservations of record.

SURVEYOR'S CERTIFICATE

I, RODNEY C. NEECE, A REGISTERED LAND SURVEYOR OF JOPLIN, JASPER COUNTY, MISSOURI, DO HEREBY CERTIFY THAT THE FIELD NOTES AND THE ATTACHED PLAT ARE A TRUE AND ACCURATE DESCRIPTION OF THE WORK PERFORMED AND MEASUREMENTS TAKEN; SURVEY WAS MADE IN ACCORDANCE WITH THE MISSOURI MINIMUM STANDARDS FOR PROPERTY BOUNDARY SURVEYS OF THE MISSOURI DEPARTMENT OF AGRICULTURE, DIVISION OF WEIGHTS & MEASURES AND LAND SURVEY, AND IS NOT A WARRANTY OF TITLE EITHER EXPRESSED OR IMPLIED. THIS DECLARATION IS MADE TO THE ORIGINAL OWNER AND/OR PURCHASER OF THE SURVEY AS OF THE DATE INDICATED IN THE TITLE BLOCK. IT IS NOT TRANSFERABLE TO ADDITIONAL INSTITUTIONS OR SUBSEQUENT OWNERS AND MAY NOT BE USED IN CONNECTION WITH A "SURVEY AFFIDAVIT" OR SIMILAR DOCUMENT, STATEMENT, OR MECHANISM TO OBTAIN TITLE INSURANCE FOR ANY SUBSEQUENT OR FUTURE GRANTEES. FURTHERMORE, THIS SURVEY IS NOT VALID WITHOUT THE ORIGINAL SIGNATURE AND EMBOSSED SEAL.

Rodney C. Neece 7/27/2015
RODNEY C. NEECE, MO.L.S. #2691

SURVEY & TOPO FOR:

Curtis King

PROPERTY ADDRESS: 26th Picher Avenue, Joplin, Missouri

SECTION - 15	TOWNSHIP - 27	RANGE - 33
SCALE: 1 = 20'.00"		DATE: 5-26-15

FILE NAME:L44BCA

STEWART & NEECE LAND SURVEYING COMPANY INC.
1201 EAST 15TH STREET, JOPLIN, MISSOURI 64804
PHONE: 417-624-0311 FAX: 417-624-0365

SERVING SOUTHWEST MISSOURI SINCE THE YEAR 1922.

LAND SURVEYS, LOT SURVEYS, SUBDIVISIONS, MINE DATA, BLUEPRINTS

CERT OF AUTHORITY - LSC-2004000198

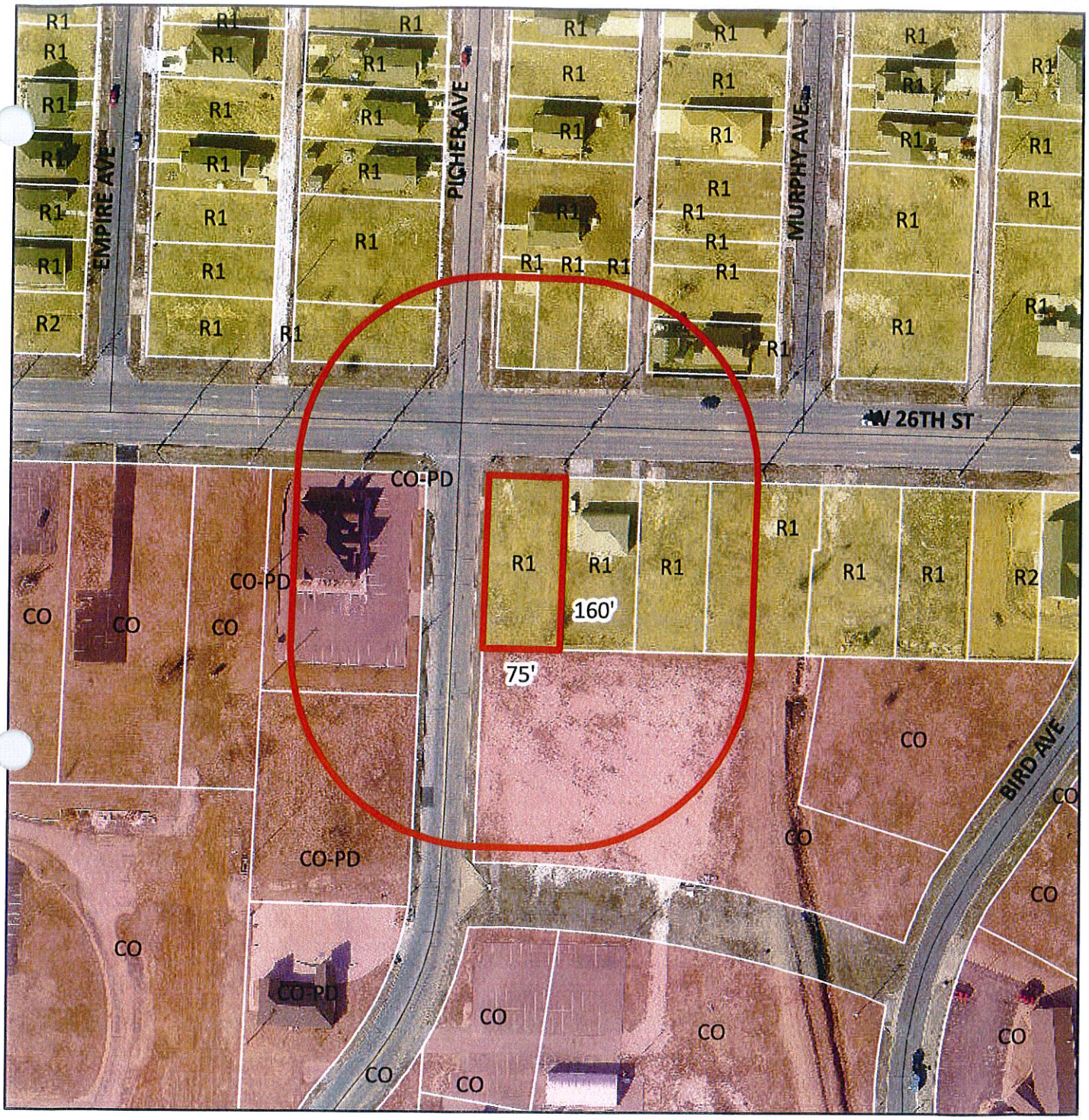

0 0.0225 0.045 0.09 0.135 0.18 Miles

Case 033-15 1136 W 26th – A request to rezone from R-1 (Single-Family Residential) to R-2 (Two-Family Residential) – Donald Johnson.

N

Case 033-15: 1136 West 26th Street – A request to rezone from R-1 (Single-Family Residential) to R-2 (Two-Family Residential) – Donald Johnson.

Mr. Eastman opened the public hearing for Case 033-15.

Mr. Curtis King, 3900 County Lane 272, Joplin, appeared representing Donald and Judy Johnson, the owners of the property at 1136 West 26th Street. They are requesting rezoning from District R-1 to District R-2 for the construction of duplexes to serve the medical students who are coming to Joplin in the next couple of years. Each unit would contain three bedrooms and two baths.

Mr. Bolander has received two protest petitions concerning this request.

Mr. Eastman asked Mr. Bolander about long-term plans for 26th Street. He stated the future land use map shows a light commercial designation along this corridor, with heavier commercial districts being located closer to Main Street and also near Maiden Lane.

Mr. Eastman asked for comments from the commissioners and the audience, and none were received. He then closed the public hearing for Case 033-15.

MR. DUNCAN MOVED, SECONDED BY MR. BROWN, THAT CASE 033-15 BE FORWARDED TO THE CITY COUNCIL WITH RECOMMENATION FOR APPROVAL, BASED UPON THE COMMENTS RECEIVED IN THE PLANNING REPORT AND DURING THE PUBLIC HEARING. THE MOTION CARRIED, WITH MR. BROWN, MR. CORTEZ, MR. DERMOTT, MR. DUNCAN, MR. EASTMAN, MR. RAMSOUR, AND MR. SMITH VOTING "AYE" (7 IN FAVOR, 0 ABSENT).

City of **JOPLIN** City Council Agenda Item

Requested Council Meeting Date: October 5, 2015

Item: COUNCIL BILL NO. 2015-275
Originating Department: PLANNING & COMMUNITY DEVELOPMENT

Attachments: 1) Copy of Council Bill
2) Planning Report
3) Commission Minutes

Planning/Community Development Manager: Troy Bolander
City Attorney: Peter C. Edwards
City Manager: Samuel L. Anselm
Board or Commission: Planning and Zoning Commission Date: 9/14/2015

Recommended Action: Planning and Zoning Commission recommended approval by a vote of "7 in favor, 0 absent"

SUMMARY/REQUEST:
Case 035-15: 2215 Wisconsin Avenue – A request for the vacation of a 10' utility easement – Schuber-Mitchell Homes.

STAFF SUMMARY:
This lot is currently zoned R-1, Single-Family Residential. However, because the lot is relatively modest in size, it would be nearly impossible to fit a single-family home on the lot without building on top of the easement. The vacation of this easement would create a buildable lot in the disaster area for a new single-family home.

Staff recommends approval of Case 035-15.

PLANNING & ZONING COMMISSION TESTIMONY:
Mr. Dan Mitchell, Schuber-Mitchell Homes, requested the vacation of a small utility easement on property they own at 2215 Wisconsin Avenue. They have contacted all the utility companies and received written confirmation that they no longer need the easement. No utilities reside within the easement. Schuber-Mitchell would like to build a home there, with that being the purpose of their request.

Mr. Eastman asked about raising that area out of the flood zone, and Mr. Mitchell will get that certified.

PUBLIC COMMENT:
None.

P & Z Case 035-15
Schuber-Mitchell Homes
(P & Z Recommended Approval)

COUNCIL BILL NO. 2015-275 ORDINANCE NO.

AN ORDINANCE providing for the vacation of a 10-foot wide public utility easement located at 2215 Wisconsin Avenue in the City of Joplin, Jasper County, Missouri.

BE IT ORDAINED BY THE COUNCIL OF THE CITY OF JOPLIN, MISSOURI, as follows:

Section 1. That all that part of a 10-foot wide public utility easement located at 2215 Wisconsin Avenue in the City of Joplin, Jasper County, Missouri, described as follows is hereby vacated, conveyed, relinquished, and reverted to the owners of the abutting lots and land:

ALL OF THAT PART OF LOTS 67 AND 68 IN HARMONY HEIGHTS ADDITION A REPLAT OF SOUTH MORLAND ACRES TO THE CITY OF JOPLIN, JASPER COUNTY, MISSOURI, DESCRIBED AS FOLLOWS: COMMENCING AT THE NORTHWEST CORNER OF SAID LOT 68; THENCE S87°59'29" E ALONG THE NORTH LINE OF SAID LOT 68 A DISTANCE OF 40.32 FEET TO THE POINT OF BEGINNING; THENCE N02°00'31"E A DISTANCE OF 5.00 FEET; THENCE S87°59'29"E A DISTANCE OF 58.33 FEET; THENCE S16°24'45"E A DISTANCE OF 10.54 FEET; THENCE N87°59'29"W A DISTANCE OF 61.67 FEET; THENCE N02°00'31" A DISTANCE OF 5.00 FEET TO THE POINT OF BEGINNING.

PASSED BY THE COUNCIL OF THE CITY OF JOPLIN, MISSOURI, this _____ day of _____, 2015, by a vote of _____.

_____
ATTEST: Michael L. Seibert, Mayor

_____
Barbara L. Hogelin, City Clerk

APPROVED AS TO FORM:

_____
Peter C. Edwards, City Attorney

Z&P Meeting: September 14, 2015
City Council Meeting: October 5, 2015

STAFF PLANNING REPORT
Vacation

CASE 035-15: A request for the vacation of a 10' utility easement tween the west right-of-way line of Schifferdecker Avenue to the east right-of-way of Washington Avenue.

APPLICANT: Schuber Mitchell Homes

REPRESENTATIVE: Levi Greer

LOCATION: 2215 Wisconsin Avenue

EXISTING CONDITIONS:

Easement Type(s)	Easement Size
Utility	10' x 60' (approx.)

REASON FOR VACATION:

Schuber Mitchell Homes would like to build a house on this lot but cannot do so without vacating the easement or building on top of it.

UTILITIES CURRENTLY LOCATED IN THE EASEMENT? No

UTILITIES PLANNED TO LOCATE IN THE EASEMENT? No

DISCUSSION:

This lot is currently zoned R-1, Single-Family Residential. However, because the lot is relatively modest in size, it would be nearly impossible to fit a single-family home on the lot without building on top of the easement. The vacation of this easement would create a buildable lot in the disaster area for a new single-family home.

Staff recommends approval of Case 035-15.

ENCLOSURES: None.

RECEIVED
8-20-15

CITY OF JOPLIN

APPLICATION FOR VACATION OF STREET OR RESERVATION

Return Form to:
Planning / Community Development Specialist.
Joplin City Hall
602 South Main Street
Joplin, Missouri 64801
417-624-0820 Ext. 511
FAX 417-625-4738

For Office Use Only

Case No.: 035-15
Filing Fee: $ 350.00
Date Advertised: 8-30-15
Date Notices Sent 8-31-15
Public Hearing Date: 9-14-15

I. Applicant Name: SCHUBER MITCHELL HOMES Phone: 417 626 7000

If more than one property applicant, please submit additional names, address and phone numbers on attached sheet(s)

Address: 1621 ANDERSON DR Zip: 64870

II. Type of vacation requested (check one):

Street Vacation____

Alley Vacation____

Utility vacation X

Other (Please specify)____

III. Legal Description of area requested to be vacated: All that Part of Lots 67 and 68 in HARMONY HEIGHTS Addition a replat of South Morland Acres to the City of Joplin, Jasper County, Missouri, described as follows:

Commencing at the Northwest corner of said Lot 68, Thence S87°59'29"E Along the North Line of said Lot 68 A distance of 40.32 feet to the point of beginning;

Thence N02°00'31"E a distance of 5.00 feet;
Thence S87°59'29"E a distance of 58.33 feet;
Thence S16°24'45"E a distance of 10.54 feet;
Thence N87°59'29"W a distance of 61.67 feet;
Thence N02°00'31"E a distance of 5.00 feet to the point of beginning.

IV. Please indicate below the extent to which the following standards are met, in the applicant's opinion.

1. Private rights will not be injured or endangered by the vacation. STANDARD IS MET 100% AS EASEMENT IS LIMITED TO A SINGLE LOT. THEREFORE, NO PERSONAL RIGHTS WILL BE AFFECTED BY THE VACATION.

2. The vacation will not cause the public to suffer a loss or inconvenience. STANDARD IS MET 100% AS EASEMENT IS LIMITED TO A SINGLE LOT. NO LOSS OR INCONVENIENCE WILL RESULT FROM REMOVAL.

3. In justice to the applicant(s) the vacation should be granted. GRANTING VACATION WILL ENABLE GUHUBER MITCHELL HOMES TO BUILD A HOME FOR A FAMILY ON THIS LOT THEREBY INCREASING THE VALUE OF THE NEIGHBORHOOD WITH THE ADDITION OF A QUALITY HOME.

V. Required Attachments:

1. Affidavit(s) from each owner of land adjoining said area that is proposed to be vacated, whom are not listed as an applicant, indicating their consent to the vacation.

2. Survey or such other drawing acceptable to the Planning / Community Development Manager depicting the street, alley or public reservation sought to be vacated and the properties and property ownerships surrounding said street, alley or public reservation.

3. Affidavit(s) from the following private utility companies indicating their consent to vacate the easement. The following private companies must be contacted and consent to the vacation before the Public Hearing can take place.

a.) MGE Missouri Gas Energy	(800) 582-1234
b.) Empire District Electric Company	(417) 624-0300
c.) Cable One	(417) 624-6340
d.) MO American Water Company	(800) 256-6426
e.) AT&T	(800) 464-7928
f.) Republic Services (Trash)	(800) 431-1507

Levi Green - 417-437-5687

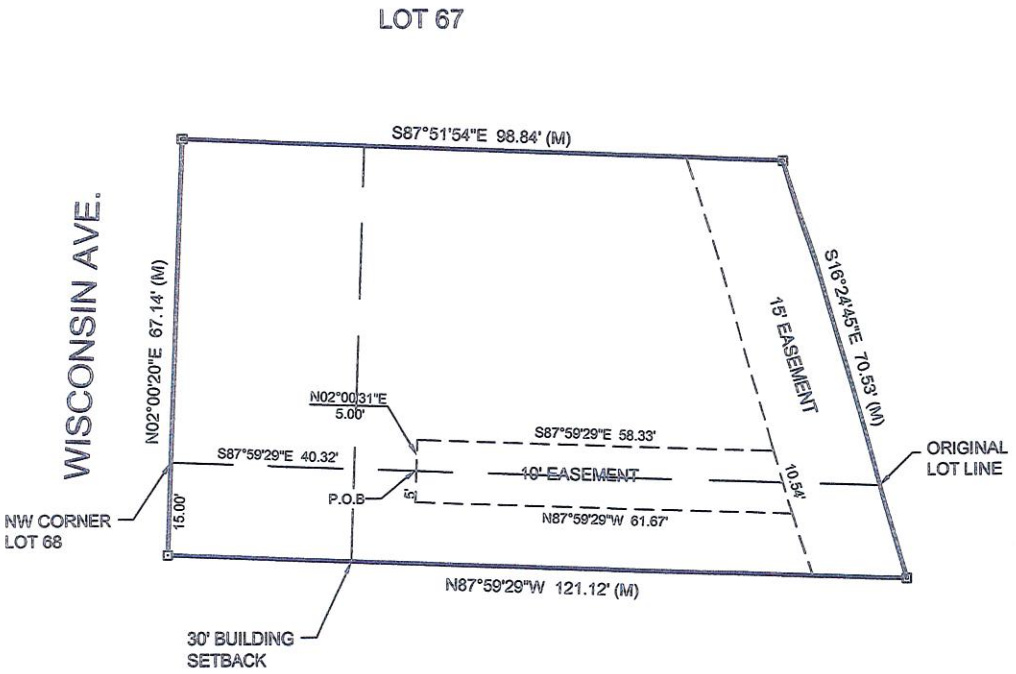

EASEMENT VACATION

ALL THAT PART OF LOTS 67 AND 68 IN HARMONY HEIGHTS ADDITION A REPLAT OF SOUTH MORLAND ACRES TO THE CITY OF JOPLIN, JASPER COUNTY, MISSOURI, DESCRIBED AS FOLLOWS:
COMMENCING AT THE NORTHWEST CORNER OF SAID LOT 68, THENCE S87°59'29"E ALONG THE NORTH LINE OF SAID LOT 68 A DISTANCE OF 40.32 FEET TO THE POINT OF BEGINNING;
THENCE N02°00'31"E A DISTANCE OF 5.00 FEET;
THENCE S87°59'29"E A DISTANCE OF 58.33 FEET;
THENCE S16°24'45"E A DISTANCE OF 10.54 FEET;
THENCE N87°59'29"W A DISTANCE OF 61.67 FEET;
THENCE N02°00'31"E A DISTANCE OF 5.00 FEET TO THE POINT OF BEGINNING.

BASIS OF BEARINGS

BEARINGS ARE BASED ON GRID NORTH OF THE MISSOURI COORDINATE SYSTEM OF 1983 MISSOURI WEST ZONE.

NOTES

NO UTILITIES SHOWN AS A PART OF THIS SURVEY.

SURVEYOR HAS MADE NO INVESTIGATION OR INDEPENDENT SEARCH FOR EASEMENTS OF RECORD, ENCUMBRANCES, RESTRICTIVE COVENANTS, OWNERSHIP TITLE EVIDENCE, OR ANY OTHER FACTS WHICH AN ACCURATE AND CURRENT TITLE SEARCH MAY DISCLOSE.

NO FLOOD DETERMINATIONS HAVE BEEN EXAMINED AS A PART OF THIS SURVEY.

THIS SURVEY HAS BEEN PERFORMED BASED ON KNOWLEDGE AND INFORMATION IN ACCORDANCE WITH COMMONLY ACCEPTED PROCEDURES CONSISTENT WITH THE CURRENT MISSOURI MINIMUM STANDARDS FOR PROPERTY BOUNDARY SURVEYS AND IS NOT A GUARANTEE OR WARRANTY EITHER EXPRESSED OR IMPLIED.

CERTIFICATE OF AUTHORITY LICENSE NUMBER LS-2014013548 EXPIRATION 12/31/2016



MJ SURVEYING, LLC
www.MJSurveyingLLC.com
PH 417.623.2525
FAX 417.623.1745
214 S. MAIN ST.
JOPLIN, MO 64801

DRAWN EM	DATE 8/19/2015	SCHUBER MITCHELL PART OF LOTS 67 & 68 IN HARMONY HTS JOPLIN, JASPER CO. MISSOURI
APPROVED BAA	DATE 8/19/2015	
SCALE 1" = 20'	SHEET	PROJECT # 15224

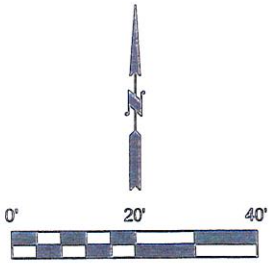

CLASS OF PROPERTY
URBAN

SOURCE DOCUMENTS
BOOK 2361, PAGE 1628

LEGEND

⊡	FOUND IRON PIN
(M)	MEASURED
(D)	DEED

SURVEY NOT VALID UNLESS SIGNED IN BLUE INK

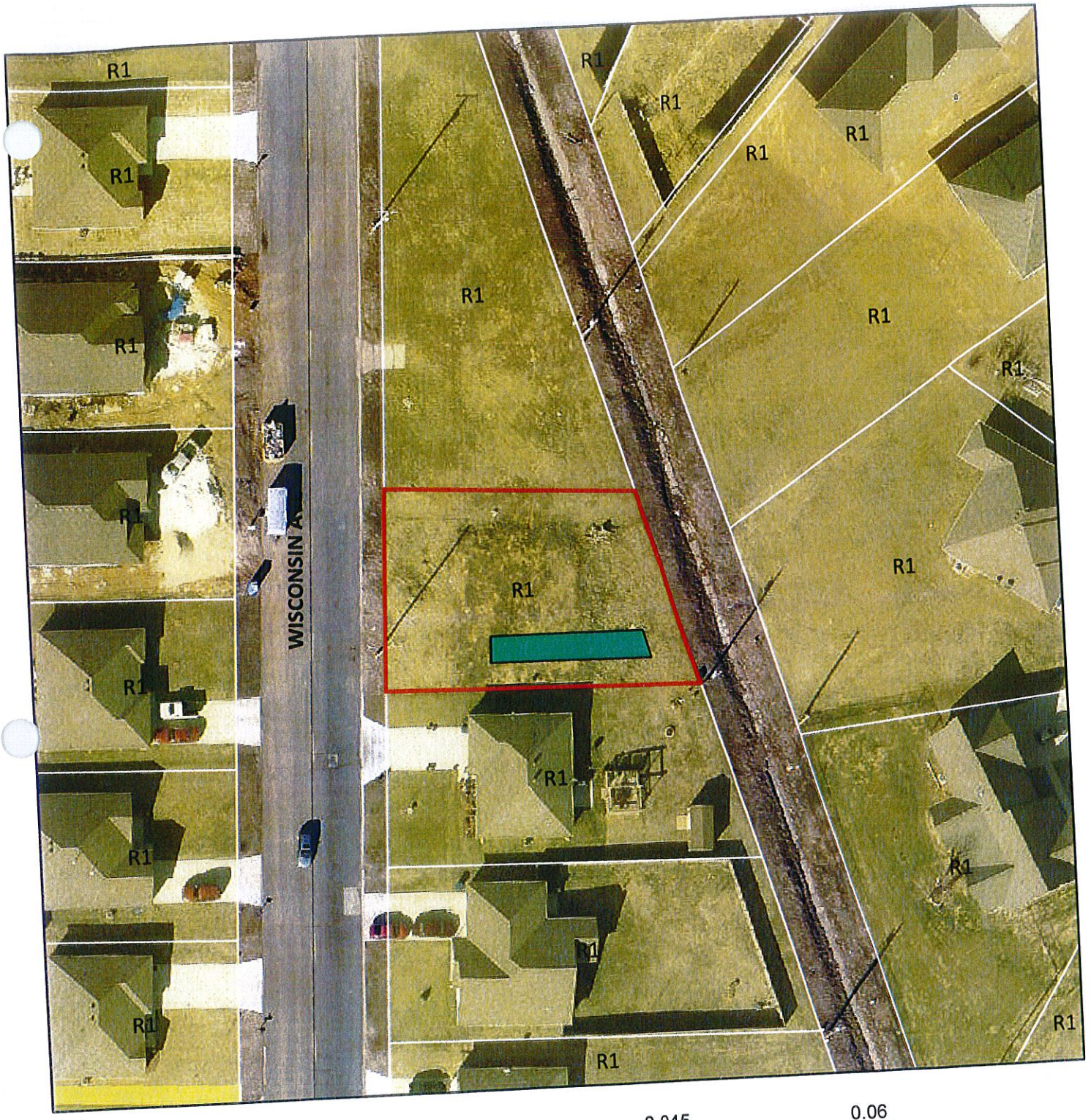

Case 035-15: 2215 Wisconsin Ave – A request for the vacation of a 10' utility easement – Schuber Mitchell Homes.

Case 035-15: 2215 Wisconsin Avenue – A request for the vacation of a 10' utility easement – Schuber-Mitchell Homes.

Mr. Eastman opened the public hearing for Case 035-15.

Mr. Dan Mitchell, Schuber-Mitchell Homes, 1621 Anderson Drive, Webb City, Missouri, appeared to request the vacation of a small utility easement on property they own at 2215 Wisconsin Avenue. They have contacted all the utility companies and received written confirmation that they no longer need the easement. No utilities reside within the easement. Schuber-Mitchell would like to build a home there, with that being the purpose of their request.

Mr. Eastman asked about raising that area out of the flood zone, and Mr. Mitchell will get that certified.

Mr. Eastman asked for comments from the commissioners and the audience, and none were received. He then closed the public hearing for Case 035-15.

MR. CORTEZ MOVED, SECONDED BY MR. BROWN, THAT CASE 035-15 BE FORWARDED TO THE CITY COUNCIL WITH RECOMMENATION FOR APPROVAL, BASED UPON THE COMMENTS RECEIVED IN THE PLANNING REPORT AND DURING THE PUBLIC HEARING. THE MOTION CARRIED, WITH MR. BROWN, MR. CORTEZ, MR. DERMOTT, MR. DUNCAN, MR. EASTMAN, MR. RAMSOUR, AND MR. SMITH VOTING "AYE" (7 IN FAVOR, 0 ABSENT).

CITY OF JOPLIN
CITY COUNCIL MEETING
MINUTES September 21, 2015

CALL TO ORDER
The regular meeting for the Joplin City Council was called to order at 6:00 p.m. by Mayor Michael Seibert.

INVOCATION - read by City Clerk Barbara Hogelin

PLEDGE OF ALLEGIANCE TO THE UNITED STATES OF AMERICA –led by Council Member Mr. Glaze.

ROLL CALL – Answering Roll Call were: Melodee Colbert-Kean; Morris Glaze; Miranda Lewis; Benjamin Rosenberg; William Scearce; Gary Shaw; Ryan Stanley and Mayor Michael Seibert. Also in attendance were City Manager Sam Anselm and City Attorney Peter Edwards.

Motion by Mr. Scearce, Second by Mr. Shaw to move Resolution 2015-018 up on the Agenda. Voting in favor were Council Members: Colbert-Kean, Glaze, Lewis, Rosenberg, Scearce, Seibert, Shaw, and Stanley 8. Nays: 0

RESOLUTION NO. 2015-018-A RESOLUTION recognizing the election of Senator Ron Richard of Joplin as the new Missouri Senate president in a vote by the Republican caucus of the Senate on Tuesday, September 15, 2015.

Mr. Scearce introduced Resolution No. 2015-018 - A Resolution recognizing the election of Senator Ron Richard of Joplin as the new Missouri Senate president in a vote by the Republican caucus of the Senate on Tuesday, September 15, 2015. Motion by Mr. Scearce Second by Mr. Shaw to Approve Resolution No. 2015-014. Voting in favor were Council Members: Colbert-Kean, Glaze, Lewis, Rosenberg, Scearce, Seibert, Shaw and Stanley 8. Nays: 0. The Resolution was read as being **Resolution No. 2015-018**

PRESENTATIONS
Overview of the priority-based budget process by Jon Johnson and Chris Fabian.
Jon Johnson and Chris Fabian of Priority Based budgeting presented to Council an overview of the budgeting process from a traditional line-item budget to a more precise process that focuses on setting community goals and then prioritizing the programs and services our organization provides to the community to achieve those goals. They quoted "100 cities across the United States have successfully adopted this budget process, and if approved, Joplin will become the second in the state of Missouri to do the same (Branson just started the process as well)". The benefits of this process are that it is transparent, it engages both elected officials and the public, and results in a financially healthy community that is sustainable into the future.

FINALIZATION OF CONSENT AGENDA - There being no further business to come before the Council, the Consent Agenda was finalized.

REPORTS AND COMMUNICATIONS

CITIZEN REQUESTS AND PETITIONS

PUBLIC HEARINGS

CONSENT AGENDA
Minutes of the September 8, 2015 Council Meeting

COUNCIL BILL NO. 2015-265 - AN ORDINANCE amending Ordinance No. 2004-256, passed by the Council of the City of Joplin, Missouri, November 15, 2004, by removing from District C-1 and including in District C-3 property as described below and located 300 feet west of the northwest corner of Zora Street and Range Line Road in the City of Joplin, Jasper County, Missouri. **Ordinance No. 2015-144**

COUNCIL BILL NO. 2015-266 -AN ORDINANCE amending Ordinance No. 2004-256, passed by the Council of the City of Joplin, Missouri, November 15, 2004, by removing from District R-2 and including in District C-3 property as described below and located at 711 South Rex Avenue in the City of Joplin, Jasper County, Missouri. **Ordinance No. 2015-145**

COUNCIL BILL NO. 2015-267 -AN ORDINANCE amending Ordinance No. 2004-256, passed by the Council of the City of Joplin, Missouri, November 15, 2004, by removing from District R-1 and including in District C-3 property as described below and located 185 feet north of the intersection of 23rd Street and Maiden Lane in the City of Joplin, Jasper County, Missouri. **Ordinance No. 2015-146**

COUNCIL BILL NO. 2015-268 -AN ORDINANCE approving the voluntary annexation by the City of Joplin of property located at 8125 East 26th Street in Jasper County, Missouri. **Ordinance No. 2015-147**

COUNCIL BILL NO. 2015-269-AN ORDINANCE amending Ordinance No. 2004-256, passed by the Council of the City of Joplin, Missouri, November 15, 2004, by removing from District R-1 and District R-3 and including in District C-1-PD property as described below and located 500 feet south of the intersection of 32nd Street and Oliver Avenue in the City of Joplin, Newton County, Missouri. **Ordinance No. 2015-148**

RESOLUTIONS

ORDINANCES - EMERGENCIES
Mr. Stanley introduced Council Bill No. 2015-155 – an ordinance approving an extension to the Solid Waste Collection Services for City of Joplin Facilities Agreement by and between the City of Joplin, Missouri, a Municipal Corporation, and Jordan Disposal, LLC which commenced on October 1, 2014 and was due to end on September 30, 2015; and enacting the six (6) months renewal option extending the contract to March 31, 2016; dealing generally with the collection, hauling and disposal of solid waste from specified city owned buildings and facilities; and authorizing the City Manager to execute the same by and on behalf of the City of Joplin; and containing an emergency clause.

Motion by Mr. Stanley, Second by Mr. Shaw that Council Bill No. 2015-155 be approved on an emergency basis. Voting in favor were Council Members: Colbert-Kean, Glaze, Lewis, Rosenberg, Scearce, Seibert, Shaw and Stanley 8. Nays: 0. Absent: 0. The Council Bill was declared Adopted and entitled **Ordinance No. 2015-149**

Mr. Stanley introduced Council Bill No. 2015-156 - an ordinance authorizing the execution of an Agreement by and between the City of Joplin and Olsson Associates, to provide professional structural engineering and project management services for dismantling the building located at 301 Commercial Alley, not to Twenty Thousand Dollars and No/100 Dollars ($20,000.00) and authorizing the Director of Public Works to execute said Agreement; and containing an emergency clause.
Motion by Mr. Stanley, Second by Mr. Shaw that Council Bill No. 2015-156 be approved on an emergency basis. Voting in favor were Council Members: Colbert-Kean, Glaze, Lewis, Rosenberg, Scearce, Seibert, Shaw and Stanley 8. Nays: 0. Absent: 0. The Council Bill was declared Adopted and entitled **Ordinance No. 2015-150**

Mrs. Lewis introduced Council Bill No. 2015-458 - an ordinance approving an Assistance Amendment by and between the U.S. Environmental Protection Agency (EPA), and the City of Joplin, Missouri, for a term commencing December 15, 2011 and running through December 13, 2018, for the amount of Five Hundred Thousand Dollars and no Cents ($500,000.00), to support soil testing and remediation activities associated with tornado response; and, authorizing the City Manager to execute the same by and on behalf of the City of Joplin, Missouri; and containing an emergency clause. Motion by Mrs. Lewis, Second by Mr. Stanley that Council Bill No. 2015-458 be approved on an emergency basis. Voting in favor were Council Members: Colbert-Kean, Glaze, Lewis, Rosenberg, Scearce, Seibert, Shaw and Stanley 8. Nays: 0. Absent: 0. The Council Bill was declared Adopted and entitled **Ordinance No. 2015-151**

Mrs. Lewis introduced Council Bill No. 2015-460 – an ordinance authorizing a Program Services Contract for WIC Local Agency Services, by and between the State of Missouri, Department of Health and Senior Services, and the City of Joplin, Missouri, and for the City of Joplin Health Department to receive additional funds for various program enhancement services, for up to Three Thousand, Three Hundred Forty-Seven Dollars, no Cents, ($3,347.00); amending the Annual Budget of the City of Joplin for the Fiscal Year 2014-2015 as adopted by Ordinance 2014-177 on October 20, 2014; and, authorizing the City Manager to execute the same by and on behalf of the City of Joplin, Missouri; and, containing an emergency clause. Motion by Mrs. Lewis, Second by Mr. Shaw that Council Bill No. 2015-460 be approved on an emergency basis. Voting in favor were Council Members: Colbert-Kean, Glaze, Lewis, Rosenberg, Scearce, Seibert, Shaw and Stanley 8. Nays: 0. Absent: 0. The Council Bill was declared Adopted and entitled **Ordinance No. 2015-152**

Mr. Stanley introduced Council Bill No. 2015-526 - an ordinance approving the Real Estate Contract by and between the City of Joplin, Missouri, a Municipal Corporation, and Parker Properties and Investments, LLC and/or Assigns, a Missouri limited liability company, for the sale of approximately 31,700 square feet of land at 20th and Wisconsin; and authorizing the City Manager to execute the same by and on behalf of the City of Joplin; and containing an emergency clause.
Motion by Mr. Stanley, Second by Mr. Shaw that Council Bill No. 2015-526 be approved on an emergency basis. Voting in favor were Council Members: Colbert-Kean, Glaze, Lewis, Rosenberg, Scearce, Seibert, Shaw and Stanley 8. Nays: 0. Absent: 0. The Council Bill was declared Adopted and entitled **Ordinance No. 2015-153**

ORDINANCES – FIRST READING

Mr. Stanley introduced COUNCIL BILL NO.2015-621-an ordinance authorizing the City of Joplin to enter into an Agreement with the Center for Priority Based Budgeting for the purpose of providing professional consulting services; and authorizing the City Manager to execute said Agreement by and on behalf of the City of Joplin, Missouri. Motion by Mr. Stanley, Second by Mr. Shaw that Council Bill No. 2015-621 be Passed on First Reading and Advanced to Second and Third. Voting in favor were Council Members: Colbert-Kean, Glaze, Lewis, Rosenberg, Scearce, Seibert, Shaw and Stanley 8. Nays: 0. Absent: 0.

ORDINANCES – SECOND AND THIRD READING

Dr. Rosenberg introduced Council Bill No. 2015-620 - an ordinance approving the applications of Historic Murphysburg's Preservation, Inc., for Murphysburg's Historic Home District Promotions; Carver Birthplace Association, for Carver Birthplace Promotions and 73rd Carver Day event, Wildcat Glades Conservation & Audubon Center, for Wildcat Glades Conservation & Audubon Center Promotions and Shoal Creek Water Festival & Wildcat Park Centennial; George A. Spiva Center for the Arts, for PhotoSpiva 2016, Active Lifestyle Events, for Joplin Memorial Marathon; Rufus Racing, LLC, for Summer Roundup Triathlon; Joplin Trails Coalition, for 2016 Cycling Events (Route 66 Tour and Maple Leaf Tour); Joplin History & Mineral Museum, for Joplin Founding Father's Day; Central Christian Center, for Joyful Hearts Conference; Joplin Disc Golf Club, for the 11th Annual Four States Open; 4-State Trucks/Chrome Shop Mafia, for Guilty By Association, Truck Show and Convoy, and MSSU Alumni Association, for Missouri Southern 2016 Homecoming for utilization of FY2016 Festivals and Celebrations support pursuant to Ordinance No. 2000-148, as authorized by the voters on November 7, 2000; authorizing the City Manager to execute appropriate agreements with each such organization for the utilization of such funds. Motion by Dr. Rosenberg, Second by Mr. Glaze that Council Bill No. 2015-620 be Passed on Second Reading and Advanced to Third Reading and Passed. Voting in favor were Council Members: Glaze, Lewis, Rosenberg, Seibert and Stanley 5. Nays: 1, Scearce. Abstention: 2, Colbert-Kean, Shaw. **Ordinance No. 2015-154**

NEW BUSINESS:

Declare excess surplus property for the annual auction.

Motion by Mr. Shaw, Second by Dr. Rosenberg to accept the City's surplus property for the annual auction. Voting in favor were Council Members: Colbert-Kean, Glaze, Lewis, Rosenberg, Scearce, Seibert, Shaw and Stanley 8. Nays: 0. Absent: 0.

Appointments/Reappointments to the Boards and Commissions –

Motion by Mr. Stanley, Second by Mrs. Lewis, to renew Michelle Cahill and David Sweeney to the Board of Health.

Council voted not to appoint at this time to the Capital Improvements & Public Safety Tax Oversight Committee

Motion by Mr. Stanley, to appoint Samuel to the Samuel Wimsett to the City Tree Board;

Motion by Mr. Stanley to make the following appointments to the Convention and Visitors Board; Eric Cerini- attractions; Glynn Knight, Bob Kluth – hotel; Eric Crosswhite- media, Jason Miller-restaurant; and renew Rob Lowrance-retail.

Motion by Mr. Scearce, Second by Dr. Rosenberg to renew Ellen Eastman to the Library Board;

Motion by Mr. Stanley to renew Christina Williams to the Solid Waste Advisory Commission.

Motion by Mr. Stanley to appoint Robert Schroer to the Traffic Commission.

News from the PIO
PIO Officer Lynn Onstot announced the guilty by Association Truck Show, convoy will be in town- downtown this weekend – for all the information and exactly what is going on you can visitjoplinmo.com. Planned is the largest convoy of trucks in the US on Saturday, September 26th.

JHAP is planning a seminar here at City Hall on October 3, 2015 in the 4th floor conference room.

Formal acceptance of Mike Woolston's resignation
City Attorney read a prepared statement before council took a formal vote of acceptance of Mike Woolston's resignation. City Attorney Edwards read, On August 21, 2015, a hearing was requested by Dr. Rosenberg as a result of the State Auditor's Report. This hearing request was based on information contained in the Report as well as the Lorraine Report. The purpose of the hearing was to see if any of the information contained in the reports along with other information rose to the level of ethical violations committed by Mr. Woolston. The purpose of the hearing was not to see if his conduct was illegal or unlawful.
Since the hearing was set, I began preparing the City's case against Mr. Woolston. Mr. Woolston hired two attorneys out of Kansas City to prepare his defense. We both worked very hard over the two weeks leading up to the hearing date. We identified as many as 20 witnesses, 50 exhibits, and hundreds of pages of documents relating to the case. This work stretched into the weekend before the Monday hearing date. On the weekend prior to the hearing, I communicated with council members regarding a settlement proposal made by Mr. Woolston through his attorneys. I frequently send confidential memos to the city council and communicate with them, answer questions and provide legal advice. I do not do this out in the open. I do this under a permitted exception to the Sunshine Law that closes confidential and privileged communications between the city and its attorney. In a case such as this one, providing council members information and a settlement proposal normally results in legal questions and me providing legal advice. In a typical situation, I will schedule a closed session to discuss a legal issue or litigation and hold these closed sessions after council meetings.
The issue for the Council was to accept the resignation and issue a joint statement. I took a vote of council to see if this offer was acceptable. The vote was important because Mr. Woolston's resignation eliminated the need for Monday's hearing and for both sides to incur additional expense, for witnesses to travel in or appear at the hearing.
With the benefit of hindsight, in addition to communicating with council, I should have called a meeting on Monday to hold a formal vote if everyone was available. But instead, I decided to formalize the vote at tonight's meeting.
As far as the process I followed, if people take issue with it, it falls solely on me and not the city council. I did what the situation dictated and in doing so not to avoid openness, but to deal with the situation at hand, on a day where City Hall was closed and on the eve of the hearing. Since last Monday, the City has handled several open records requests regarding the hearing and has released that information. The City's documentary evidence was released to two media outlets and has been posted to the City's website.
By comparison, if we had a jury trial in a civil case set for Monday, and a settlement offer had been received on the eve of trial, I would have done the same thing. But that is a somewhat different. This was a hearing centered on an issue with a lot of public interest, and I should have done a few things differently in consideration of this. Tonight gives Council the opportunity to weigh in on the issue publicly.

Dr. Rosenberg, Mr. Scearce, Ms. Colbert-Kean, Mr. Shaw, Mrs. Lewis, Mr. Stanley and Mayor Seibert made comments before the vote was taken.

Motion by Mr. Glaze, Second by Mr. Stanley, to accept the resignation and joint statement of Mr. Mike Woolston.

It was decided to accept applications for the vacated general council seat until Friday, October 2, 2015. Council will then review the applications and proceed further.
Motion by Mr. Stanley, Second by Mr. Glaze to accept applications. Voting in favor were Council Members: Colbert-Kean, Glaze, Lewis, Seibert, Shaw and Stanley 6. Nays: 2, Rosenberg, Scearce Absent: 0.

There being no further business the meeting adjourned at 8:30p.m.

Submitted,

Barbara L. Hogelin, MMC/MPCC, City Clerk

CITY OF JOPLIN CITY COUNCIL AGENDA ITEM

REQUESTED COUNCIL MEETING DATE: September 21, 2015

ITEM: Council Bill No. 2015-621 authorizing the City of Joplin to enter into an Agreement with the Center for Priority Based Budgeting for the purpose of providing professional consulting services.

ORIGINATING DEPARTMENT: City Manager
ATTACHMENTS: Council Bill No. 2015-621; Exhibit "A": Agreement, Exhibit "B": Bid Tab

DEPARTMENT HEAD:	N/A
FINANCE:	Leslie Haase
LEGAL:	Peter C. Edwards
CITY MANAGER:	Samuel L. Anselm

INTRODUCTION:

This Council Bill approves an Agreement for professional consulting services between the City of Joplin and the Center for Priority Based Budgeting.

DISCUSSION:

On June 1, 2015, the City accepted bids for priority based budgeting services. Two firms responded with a proposal, and a third firm did not return a response. The Center for Priority Based Budgeting submitted the low bid, with a not-to-exceed amount of $62,500. The bid tabulation is attached.

Approval of this council bill will change our budgeting process, from a traditional line-item budget where we estimate revenues and use last year's budget numbers to make adjustments, to a process that focuses on setting community goals and then prioritizing the programs and services our organization provides to the community to achieve those goals. To date, approximately 100 cities from across the United States have successfully adopted this budget process, and if approved, Joplin will become the second in the state of Missouri to do the same (Branson just started the process as well). The benefits of this process are that it is transparent, it engages both elected officials and the public, and results in a financially healthy community that is sustainable into the future.

RECOMMENDATION:

Staff recommends that this Council Bill be passed on First Reading and advanced to Second and Third.

COUNCIL BILL NO. 2015-621 ORDINANCE NO.

AN ORDINANCE authorizing the City of Joplin to enter into an Agreement with the Center for Priority Based Budgeting for the purpose of providing professional consulting services; and authorizing the City Manager to execute said Agreement by and on behalf of the City of Joplin, Missouri.

BE IT ORDAINED BY THE COUNCIL OF THE CITY OF JOPLIN, MISSOURI, as follows:

Section 1. That the Agreement by and between the City of Joplin, Missouri, and the Center for Priority Based Budgeting, retaining the Center for Priority Based Budgeting for the provision of professional consulting services, a copy of said Agreement being attached hereto and incorporated herein as Exhibit "A", be and the same is hereby, approved.

Section 2. That the City Manager of the City of Joplin is hereby authorized and directed to execute said Agreement by and on behalf of the City of Joplin, Missouri.

PASSED BY THE COUNCIL OF THE CITY OF JOPLIN, MISSOURI, this _____ day of _____, 2015.

_____
Michael L. Seibert, Mayor

ATTEST:

_____
Barbara L. Hogelin, City Clerk

APPROVED AS TO FORM:

_____
Peter C. Edwards, City Attorney

CITY		CONSULTANT	
CITY OF JOPLIN 602 S. MAIN STREET JOPLIN, MO 64801		Name: Center for Priority Based Budgeting Address: 13701 W. Jewell Avenue, Suite 200-28 Lakewood, CO 80228	
Attention: Samuel L. Anselm		Attention: Jon Johnson Chris Fabian	
Department: City Manager		Phone: 720-361-3710	Fax:
Phone: 417-624-0820, ext 205	Fax: 417-625-4707		

AGREEMENT FOR PROFESSIONAL CONSULTING SERVICES

THIS AGREEMENT, made and entered into this _____ day of _____, 2015, by the parties identified above.

WITNESSETH:

WHEREAS, the City of Joplin desires to engage Consultant to provide the services of a priority based budgeting consulting firm to develop a new budget process utilizing "Priority Based Budgeting" principles. Specifically, Consultant will help the City evaluate services to determine which services are best aligned with the City's priorities. Consultant will help the City Council, the City staff, and the public learn how to value services and to divest themselves of lower-priority services. Consultant will equip the City with the information, programs, and tools necessary to implement "Priority Based Budgeting."

WHEREAS, the Consultant has made certain representations and statements to the City with respect to the provision of such services and the City has accepted said proposal. Specifically, Consultant has represented that in implementing "Priority Based Budgeting," it will assist the City in identifying results, clarify results definitions, identify and cost ongoing programs and services, value ongoing programs based on results, and allocate resources based on priorities;

NOW, THEREFORE, for the consideration herein expressed, it is agreed by and between the City and the Consultant as follows:

1. **Services.** The City agrees to engage the services of the Consultant and the Consultant agrees to perform the services described in this Agreement. The services of the Consultant shall commence as soon as practicable after the execution of this Agreement, unless otherwise directed in writing, and shall be undertaken and completed in such sequence as to assure their expeditious completion in light of the purposes of the contract. The Consultant shall be responsible for the professional quality, technical accuracy, timely completion, and the coordination of all reports and other services furnished by the Consultant under this Agreement. Approval by the City and other agencies of reports and incidental consulting work or materials furnished hereunder shall not in any way relieve the Consultant of his responsibility for the technical adequacy of his work.

   a. Scope of Services. The Scope of Services is set out specifically in the Request for Proposal, 2015-RFP-08, which is incorporated fully herein and attached hereto as Exhibit A. The Scope of Services for this Agreement shall include the Services as set forth in "1.0 Scope of Work" of 2015-RFP-08. The Scope of Services for this Agreement shall also include the Consultant's Response and Proposal to 2015-RFP-08, which is incorporated and attached hereto as Exhibit B. The Scope of Services for this Agreement shall also include the Services as set forth in "1.4.4 Experience and Qualifications" (including pages 7-24) of Consultant's Response and Proposal to 2015-RFP-08. However, regarding travel, notwithstanding the terms contained in Exhibit A and Exhibit B, the parties agree that Consultant shall travel to City at City's request.

2. **Term.** The services of the Consultant shall commence as soon as practicable after the execution of this Agreement, unless otherwise directed in writing, and shall be undertaken and completed in such sequence as to assure their expeditious completion in light of the purposes of the contract, but in any event, all of the services required hereunder shall be completed as set forth in the schedule for the project outlined in this Agreement, specifically, in Consultant's Response and Proposal to 2015-RFP-08, "Proposed Timeline and Costs for Implementation and Future Phases" (including pages 23-24) .

3. **Payment.** The City, pursuant to this Agreement, shall pay Consultant the consideration set forth in Consultant's Response and Proposal to 2015-RFP-08, "Proposed Timeline and Costs for Implementation and Future Phases" (including pages 23-24), which

is incorporated fully herein and attached hereto as Exhibit B, which shall constitute complete payment for the services furnished in connection with the work required to be performed under this Agreement. Payment request shall be made pursuant to the "Proposed Timeline and Costs for Implementation and Future Phases" and shall be approved by the City and its Project Manager.

a. In year one, the total costs for Consultant's services under this Agreement shall not exceed $43,500.00. In year one, the Consultant shall also be entitled to payment for expenses related to travel, in an amount not to exceed $10,000.00 per year. Said expenses shall be submitted with verifying documentation to the City for payment.

b. For years two and three, the total costs for Consultant's services under this Agreement shall not exceed $9,500 per year. For years two and three, the Consultant shall also be entitled to payment for expenses related to travel, in an amount not to exceed $10,000.00 per year. Said expenses shall be submitted with verifying documentation to the City for payment.

4. **Exchange of Data**. All information, data, and reports as are in the City's possession and necessary for the carrying out of the work, shall be furnished to the Consultant without charge, and the parties shall cooperate with each other in every way possible in carrying out the scope of services.

5. **Personnel**. The Consultant shall secure at its own expense, all personnel required to perform the services called for under this contract by the Consultant. Such personnel shall not be employees of or have any contractual relationship with the City except as employees of the Consultant. All of the services required hereunder will be performed by the Consultant or under the Consultant's direct supervision and all personnel engaged in the work shall be fully qualified and shall be authorized under state and local law to perform such services. None of the work or services covered by this contract shall be subcontracted without the written approval of the City.

6. **Termination of Contract.**

a. Termination for breach. Failure of the Consultant to fulfill the Consultant's obligations under this contract in a timely and satisfactory manner in accordance with the description of services set forth in Exhibits A and B shall constitute a breach of the contract, and the City shall thereupon have the right to immediately terminate the contract. The City shall give written notice of termination to the Consultant by one of three different means: Facsimile Transmission ("FAX") if Consultant has a FAX number; U.S. Postal Service Mails; or by hand delivering a copy of the same to the Consultant; or may give notice by any combination of the above methods. The date of termination shall be the date upon which notice of termination is hand delivered to Consultant or given by FAX, or the third day following mailing of the notice of termination, whichever first occurs. In the event of termination for breach, all finished or unfinished documents, data, studies, surveys, drawings, maps, models, photographs, and reports or other materials prepared by the Consultant under this contract shall at the option of the City become its property, and the Consultant shall be entitled to receive just and equitable compensation for any satisfactory work completed on such documents and other materials; provided, that the Consultant shall not be relieved of liability to the City for damages sustained by the City by virtue of any such breach of the contract by the Consultant.

b. Right to terminate in the absence of breach. Either party may terminate this contract for any reason, by serving notice of intent to terminate upon the other party by the means specified in paragraph A of this section. Such notice shall specify the date of termination, but in no event shall either party terminate the contract under this provision upon less than thirty (30) days' notice to the other party; provided, that the parties may mutually agree to waive the thirty (30) day requirement and to shorten the time for notice of termination. In the event of termination in the absence of breach, all finished or unfinished documents, data, studies, surveys, drawings, maps, models, photographs, and reports or other materials prepared by the Consultant under this contract shall at the option of the City become its property, and the Consultant shall be entitled to receive just and equitable compensation for any satisfactory work completed on such documents and other materials.

7. **Conflicts**. No salaried officer or employee of the City, and no member of the City Council shall have a financial interest, direct or indirect, in this contract. A violation of this provision renders the contract void. Any federal regulations, and applicable provisions in Section 105.450 et seq. RSMo. shall not be violated. Consultant covenants that it presently has no interest and shall not acquire any interest, direct or indirect, which would conflict in any manner or degree with the performance of services to be performed under this contract. The Consultant further covenants that in the performance of this contract no person having such interest shall be employed.

8. **Assignment**. The Consultant shall not assign any interest in this contract, and shall not transfer any interest in the same (whether by assignment or novation), without prior written consent of the City thereto.

9. **Discrimination.** The Contractor agrees in the performance of this contract not to discriminate on the ground or because of race, creed, color, national origin or ancestry, sex, religion, handicap, age, status as a protected veteran or status as a qualified individual with a disability, or political opinion or affiliation, against any employee of Contractor or applicant for employment and shall include a similar provision in all subcontracts let or awarded hereunder. The parties hereby incorporate the requirements of 41 C.F.R. §§ 60-1.4(a)(7), 29 C.F.R. Part 471, Appendix A to Subpart A, 41 C.F.R. § 60-300.5(a)ii and 41 C.F.R. § 60-741.5(a), if applicable.

   a. This contractor and subcontractor shall abide by the requirements of 41 C.F.R. § 60-300.5(a). This regulation prohibits discriminations against qualified protected veterans, and requires affirmative action by covered prime contractors and subcontractors to employ and advance in employment qualified protected veterans.

   b. This contractor and subcontractor shall abide by the requirements of 41 C.F.R. § 60-741.5(a). This regulation prohibits discrimination against qualified individuals on the basis of disability, and requires affirmative action by covered prime contractors and subcontractors to employ and advance in employment qualified individuals with disabilities.

10. **Compliance with Laws**. Consultant agrees to comply with all applicable federal, state and local laws or rules and regulations applicable to the provision of services and products hereunder, as are enacted as of the date of rendered services. Consultant affirmatively states that payment of all local, state, and federal taxes and assessments owed by the Consultant is current.

11. **Reports and Information.** The Consultant, at such times and in such forms as the City may require, shall furnish the City such periodic reports as it may request pertaining to the work or services undertaken pursuant to this Contract, the costs and obligations incurred or to be incurred in connection therewith, and any other matters covered by this Contract.

12. **Records and Audits.** The Consultant shall maintain accounts and records, including personnel, property, and financial records, adequate to identify and account for all costs pertaining to the Contract and such other records as may be deemed necessary by the City to assure proper accounting for all project funds. The City, EDA, the Comptroller General of the United States, the Departmental Inspector General, or any of their duly authorized representatives, shall have access to any paper or electronic documents, books, correspondence, and records of the Consultant (which are pertinent to the Award) to verify the recipient's compliance with Award requirements. *See* 13 C.F.R. § 302.14. Consultant shall maintain all records for at least three (3) years after the recipient makes final payment and all pending matters are closed. *See* 15 C.F.R. §§ 14.53(b) or 24.36(i)(11), as applicable.

13. **Copyright**. No report, maps, or other documents produced in whole or in part under this Contract shall be the subject of an application for copyright by or on behalf of the Consultant.

14. **Equal Employment Opportunity**. During the performance of this Contract, the Consultant agrees as follows:

   a. The Consultant will not discriminate against any employee or applicant for employment because of race, creed, color, national origin, religion, or sex. The Consultant will take affirmative action to ensure that applicants are employed, and that employees are treated during employment, without regard to their race, creed, color, national origin, religion, or sex. Such action shall include, but not be limited to, employment, upgrading, demotion, or transfer; recruitment or recruitment advertising; layoff or termination; rates of pay or other forms of compensation; and selection for training, including apprenticeship. The Consultant agrees to post in conspicuous places, available to employees and applicants for employment, notices to be provided by the City setting forth the provisions of this non-discrimination clause.

   b. The Consultant will, in all solicitation or advertisements for employees placed by or on behalf of the Consultant, state that all qualified applicants will receive consideration for employment without regard to race, creed, color, national origin, religion, or sex.

   c. The Consultant will cause the foregoing provisions to be inserted in all subcontracts for any work covered by this Contract so that provisions will be binding upon each subcontractor, provided that the foregoing provisions shall not apply to contracts or subcontracts for standard commercial supplies or raw materials.

   d. The Consultant will comply with all provisions of Executive Order 11246 of September 24, 1965, and of the rules, regulations, and relevant orders of the Secretary of Labor.

   e. The Consultant will furnish all information and reports required by Executive Order 11246 of September 24, 1965, and

by the rules, regulations, and orders of the Secretary of Labor, or pursuant thereto, and will permit access to his books, records, and accounts by the City and the Secretary of Labor for purposes of investigation to ascertain compliance with such rules, regulations, and orders.

f. The Consultant shall ensure that the hours of minority and female employment and training must be substantially uniform throughout the length of the contract and throughout each trade. The Consultant shall make a good faith effort to employ minorities and women evenly on each of its projects. The transfer of minority or female employees or trainees from contractor to contractor or from project to project for the sole purpose of meeting the Contractor's goals shall be a violation of the contract, the Executive Order and the regulations in 41 CFR 60-4. Compliance with the goals will be measured against the total work hour performed.

g. In the event of the Consultant's noncompliance with the non-discrimination clauses of this Agreement or with any of such rules, regulations, or orders, this Agreement may be canceled, terminated, or suspended in whole or in part, and the Consultant may be declared ineligible for further Government contracts in accordance with procedures authorized in Executive Order 11246 of September 24, 1965, and such other sanctions may be imposed and remedies invoked as provided in Executive Order 11246 of September 24, 1965, or by rule, regulation, or order of the Secretary of Labor, or as otherwise provided by law.

h. The Consultant will include the provisions of paragraphs (a) through (g) in every subcontract or purchase order unless exempted by rules, regulations, or orders of the Secretary of Labor issued pursuant to Section 204 Executive Order 11246 of September 24, 1965, so that such provisions will be binding upon each subcontractor or vendor. The Consultant will take such action with respect to any subcontract or purchase order as the City may direct as a means of enforcing such provisions including sanctions for noncompliance. Provided, however, that in the event the Consultant becomes involved in, or is threatened with, litigation with a subcontractor or vendor as a result of such direction by the City, the Consultant may request the United States Government to enter into such litigation to protect the interests of the United States.

15. **Civil Rights Act of 1964**. Under Title VI of the Civil Rights Act of 1964, no person shall, on the grounds of race, color, or national origin, be excluded from participation in, be denied the benefits of, or be subjected to discrimination under any program or activity receiving Federal financial assistance.

16. **Affirmative Action for Handicapped Workers**

a. The Consultant will not discriminate against any employee or applicant for employment because of physical or mental handicap in regard to any position for which the employee or applicant for employment is qualified. The Consultant agrees to take affirmative action to employ, advance in employment, and to otherwise treat qualified handicapped individuals without discrimination based upon their physical or mental handicap in all employment practices, such as employment upgrading, demotion or transfer, recruitment, advertising, layoff or termination, rates of pay or other forms of compensation, and selection for training including apprenticeship.

b. The Consultant agrees to comply with the rules, regulations, and relevant orders of the Secretary of Labor issued pursuant to the Act.

c. In the event of the Consultant's noncompliance with the requirements of this clause, actions for noncompliance may be taken in accordance with the rules, regulations, and relevant orders of the Secretary of Labor issued pursuant to the Act.

d. The Consultant agrees to post in conspicuous places, available to employees and applicants for employment, notices in a form to be prescribed by the Director, provided by or through the contracting officer. Such notices shall state the contractor's obligation under the law to take affirmative action to employ and advance in employment qualified handicapped employees and applicants for employment, and the rights of the applicants and employees.

e. The Consultant will notify each labor union or representative of workers with which it has a collective bargaining agreement or other contract understanding, that the contractor is bound by terms of Section 503 of the Rehabilitation Act of 1973 and is committed to take affirmative action to employ and advance in employment physically and mentally handicapped individuals.

f. The Consultant will include the provisions of this clause in every subcontract or purchase order of $2,500 or more unless exempted by rules, regulations, or orders of the Secretary issued pursuant to Section 503 of the Act, so that such provisions will be binding upon each subcontractor or vendor. The Consultant will take such action with respect to any subcontractor or purchase order as the Director of the Office of Federal Contract Compliance Programs may direct to enforce such provisions, including action for noncompliance.

17. **Section 504 of the Rehabilitation Act of 1973**, as amended, provides for nondiscrimination of an otherwise qualified individual solely on the basis of his handicap in benefiting from any program or activity receiving Federal financial assistance. All recipients must certify to compliance with all provisions of this Section.

18. **Age Discrimination Act of 1975**. No person in the United States, on the basis of age, be excluded from participation in, be denied benefits of, or be subjected to discrimination under, any program or activity receiving Federal financial assistance.

19. **Authorized Employees**. Consultant acknowledges that Section285.530, RSMo, prohibits any business entity or employer from knowingly employing, hiring for employment, or continuing to employ an unauthorized alien to perform work within the State of Missouri. Consultant therefore covenants that is not knowingly in violation of subsection 1 or Section 285.530, RSMo, and that it will not knowingly employ, hire for employment, or continue to employ any unauthorized aliens to perform work on the Project, and that its employees are lawfully to work in the United States.

20. **Interest of Consultant and Employees**. The Consultant covenants that he/she presently has no interest and shall not acquire interest, direct or indirect, in the study area or any parcels therein or any other interest which would conflict in any manner or degree with the performance of his services hereunder. The Consultant further covenants that in the performance of this Contract, no person having any such interest shall be employed.

21. **Interest of Members of a City.** No member of the governing body of the City and no other officer, employee, or agent of the City who exercises any functions or responsibilities in connection with the planning and carrying out of the program, shall have any personal financial interest, direct or indirect, in this Contract, and the Consultant shall take appropriate steps to assure compliance.

22. **Interest of Other Local Public Officials.** No member of the governing body of the locality and no other public official of such locality, who exercises any functions or responsibilities in connection with the planning and carrying out of the program, shall have any personal financial interest, direct or indirect, in this Contract, and the Consultant shall take appropriate steps to assure compliance.

23. **Affidavit for Contracts Over $5,000.00**. That pursuant to Missouri Revised Statute Sections 285.525 through 285.550, if this contract exceeds the amount of $5,000.00 and Consultant is associated with a business entity, Consultant shall provide an acceptable notarized affidavit stating that the associated business entity is enrolled in and participates in a federal work authorization program with respect to the employees working in connection with the contracted services, and that said business entity does not knowingly employ any person who is an unauthorized alien in connection with the contracted services. Additionally, Consultant must provide documentation for said business entity evidencing current enrollment in a federal work authorization program.

24. **Nonresident/Foreign Contractors**. The Consultant shall procure and maintain during the life of this contract:

    a. If the Consultant is a foreign corporation, a certificate of authority to transact business in the State of Missouri from the Secretary of State, unless exempt pursuant to the provisions of Section 351.572 RSMo.

    b. A certificate from the Missouri Director of Revenue evidencing compliance with the transient employer financial assurance law, unless exempt pursuant to the provisions of Section 285.230 RSMo.

25. **General Independent Contractor Clause**. This agreement does not create an employee/employer relationship between the parties. It is the parties' intention that the Consultant will be an independent contractor and not the City's employee for all purposes, including, but not limited to, the application of the Fair Labor Standards Act minimum wage and overtime payments, Federal Insurance Contribution Act, the Social Security Act, the Federal Unemployment Tax Act, the provisions of the Internal Revenue Code, Missouri revenue and taxation laws, Missouri workers' compensation and unemployment insurance laws. The Consultant will retain sole and absolute discretion in the judgment of the manner and means of carrying out the Consultant's activities and responsibilities hereunder. The Consultant agrees that it is a separate and independent enterprise from the public employer, that it has a full opportunity to find other business, that it has made its own investment in its business, and that it will utilize a high level of skill necessary to perform the work. This agreement shall not be construed as creating any joint employment relationship between the Consultant and the City, and the City will not be liable for any obligation incurred by the Consultant, including but not limited to unpaid minimum wages and/or overtime premiums.

26. **City Benefits**. The Consultant shall not be entitled to any of the benefits established for the employees of the City nor be covered by the Worker's Compensation Program of the City.

27. **Insurance**. Without limiting any of the other obligations or liabilities of the Consultant, the Consultant shall secure and maintain at its own cost and expense, throughout the duration of this Contract and until the work is completed and accepted by the City of Joplin, insurance of such types and in such amounts as may be necessary to protect it and the interests of the

City of Joplin against all hazards or risks of loss as hereunder specified or which may arise out of the performance of the Contract Documents. The form and limits of such insurance, together with the underwriter thereof in each case, are subject to approval by the City of Joplin. Regardless of such approval, it shall be the responsibility of the Consultant to maintain adequate insurance coverage at all times during the term of the Contract. Failure of the Consultant to maintain coverage shall not relieve it of any contractual responsibility or obligation or liability under the Contract Documents.

The certificates of insurance, including evidence of the required endorsements hereunder or the policies, shall be filed with the City at the time that this contract is signed by the Consultant. All insurance policies shall provide thirty (30) days written notice to be given by the insurance company in question prior to cancellation or non-renewal of such insurance. Such notices shall be mailed, certified mail, return receipt requested, to:

City of Joplin – City Manager, 602 S. Main, Joplin, MO 64801

All policies except for the professional liability policy shall name the City as an additional insured with limits of liability not less than the sovereign immunity limits for Missouri public entities calculated by the Missouri Department of Insurance as of January 1 each calendar year and published annually in the Missouri Register pursuant to Section 537.610, RSMo.
(See, http://insurance.mo.gov/industry/sovimmunity.php).

As of January 1, 2015, the minimum coverage for the insurance referred to herein shall be as set out below:

a. Workers' Compensation….Statutory coverage per RSMo 287.010 et seq.
Employer's Liability……. $1,000,000.00

b. Commercial General Liability Insurance, including coverage for Contractual Liability and Independent Contractors Liability. Such coverage shall apply to bodily injury and property damage on an "Occurrence Form Basis" with limits of at least Two Million Six Hundred Eighty-Seven Thousand Five Hundred Ninety-Four and no/100 Dollars ($2,687,594.00) for all claims arising out of a single accident or occurrence and at least Four Hundred Three Thousand One Hundred Thirty-Nine and no/100 Dollars ($403,139.00) with respect to injuries and/or death of any one person in a single occurrence and an amount not less than at least $1,000,000 for all claims to property arising out of a single occurrence and at least $100,000 to any one owner with respect to damages to property. Consultant agrees that the proceeds of such insurance policy shall first be used to pay any award, damages, costs, and/or attorneys' fees incurred by or assessed against City, its employees, officers and agents, before payment of any award, damages, costs or attorney's fees of Consultant, its employees, officers or agents. Consultant agrees to cause its insurer to name City as an additional insured on such insurance policy, including the City as an additional insured for coverage under its products-completed operations hazard, and said policy shall be primary and noncontributory.

c. Automobile Liability Insurance covering bodily injury and property damage for owned, non-owned and hired vehicles, with limits of at least Two Million Six Hundred Eighty-Seven Thousand Five Hundred Ninety-Four and no/100 Dollars ($2,687,594.00) for all claims arising out of a single accident or occurrence and at least Four Hundred Three Thousand One Hundred Thirty-Nine and no/100 Dollars ($403,139.00) with respect to injuries and/or death of any one person in a single accident or occurrence.

d. Errors and Omissions Insurance. The Consultant shall maintain a professional liability insurance policy in the amount of $1,000,000.00 on both a per-claim and an aggregate basis. This policy shall remain in full force and effect for a period of one year after completion and acceptance by the City of the construction of the project.

e. Subcontracts. In case any or all of this work is sublet, the Consultant shall require the subcontractor to procure and maintain all insurance required in subparagraphs (A), (B) and (C) hereof and in like amounts. Consultant shall require any and all subcontractors with whom it enters into a contract to perform work on this project to protect the City of Joplin through insurance against applicable hazards or risks and shall, upon request of the City, provide evidence of such insurance.

f. Notice. The Consultant and/or subcontractor shall furnish the City prior to beginning the work satisfactory proof of carriage of all the insurance required by this contract, with the provision that policies shall not be canceled, modified or non-renewed without thirty (30) days written notice to the City of Joplin.

g. Legislative or Judicial Changes. In the event the scope or extent of the City's tort liability as a governmental entity as described in Section 537.600 through 537.650 RSMo is broadened or increased during the term of this agreement by

legislative or judicial action, the City may require Consultant, upon 10 days written notice, to execute a contract addendum whereby the Consultant agrees to provide, at a price not exceeding Consultant's actual increased premium cost, additional liability insurance coverage as the City may require to protect the City from increased tort liability exposure as the result of such legislative or judicial action. Any such additional insurance coverage shall be evidenced by an appropriate certificate of insurance and shall take effect within the time set forth in the addendum.

28. **Liability and Indemnity**. The parties mutually agree to the following:

    a. The Consultant shall defend, indemnify, and hold the City harmless from and against all damages, losses, liabilities, expenses, and costs with respect to all claims, including, but not limited to, claims for personal injuries, wrongful death, and damages to property, which may be asserted against the City by any person or entity as the result of Consultant's (or any of Consultant's subcontractors) negligent acts, errors, or omissions in the course of the performance of this contract, provided that the Consultant is not obligated to indemnify or hold harmless the City from the City's own negligence or wrong doing.

    b. The Consultant shall indemnify and hold the City harmless from all wages or overtime compensation due its employees in rendering services pursuant to this agreement, including payment of reasonable attorneys' fees and costs in the defense of any claim made under the Fair Labor Standards Act or any other federal or state law.

    c. In no event shall the City be liable to the Consultant for special, indirect, or consequential damages, except those caused by the City's gross negligence or willful or wanton misconduct arising out of or in any way connected with a breach of this contract. The maximum liability of the City shall be limited to the amount of money to be paid or received by the City under this contract.

29. **Ownership of Documents.** All files and information will be submitted before or upon final approval and acceptance of the contract documents. All documents are and remain the property of the Consultant until such time as this Agreement is, for any reason, terminated, at which time they become the property of the City.

30. **Notices**. All notices required or permitted herein under and required to be in writing may be given by FAX or by first class mail addressed to City and Consultant at the addresses shown above. The date of delivery of any notice given by mail shall be the date falling on the third day after the day of its mailing. The date of delivery of notice by FAX transmission shall be deemed to be the date transmission occurs, except where the transmission is not completed by 5:00 p.m. on a regular business day at the terminal of the receiving party, in which case the date of delivery shall be deemed to fall on the next regular business day for the receiving party.

31. **Anti-Lobbying:** The Consultant shall ensure that no federal appropriated funds have been paid or will be paid, by or on behalf of the undersigned, to any person for influencing or attempting to influence an officer or employee of any agency, a Member of Congress, an officer or employee of Congress, or an employee of a Member of Congress in connection with the awarding of any federal contract, the making of any federal grant, the making of any federal loan, the entering into of any cooperative agreement, and the extension, continuation, renewal, amendment, or modification of any federal contract, grant, loan, or cooperative agreement.

32. **Remedies.** Except as may be otherwise found in the contract documents, all claims, disputes, counter-claims, and other matters in question between the Owner and Consultant arising out of or related to this agreement or the breach thereof, will be first submitted to mediation, and if the dispute is not resolved, the parties may pursue all other available legal remedies.

33. **Jurisdiction**. This agreement and every question arising hereunder shall be construed or determined according to the laws of the State of Missouri. Should any part of this agreement be litigated, venue shall be proper only in the Circuit Court of Jasper County, Missouri.

34. **Entire Agreement**. This agreement contains the entire agreement of the parties. No modification, amendment, or waiver of any of the provisions of this agreement shall be effective unless in writing specifically referring hereto, and signed by both parties.

35. **Documents Made a Part of This Agreement**.

    Exhibit A. City of Joplin RFP 2015-RFP-08
    Exhibit B. Consultant's Response and Proposal to 2015-RFP-08

Exhibit C. Bid Tabulation for RFP 2015-RFP-08
Exhibit D. Evaluation Results for RFP 2015-RFP-08

IN WITNESS WHEREOF, the parties hereto have set their hands and seals on the day and year herein stated.

REVIEWED FOR APPROVAL

_____
Name & Title of Staff Project Manager

CERTIFICATE OF DIRECTOR OF FINANCE

I certify that the expenditure contemplated by this document is within the purpose of the appropriation to which it is to be charged and that there is an unencumbered balance of appropriated and available funds to pay therefore.

_____
Leslie Haase, Director of Finance

APPROVED AS TO FORM

_____
Peter Edwards, City Attorney

Consultant: Center for Priority Based Budgeting

By: _____

Printed Name: Philip McEwen

Title: Chief Financial Officer

Date: _____

CITY OF JOPLIN, MISSOURI

By: _____
Samuel L. Anselm, City Manager

Date: _____

NOTICE OF REQUEST FOR PROPOSAL

REQUEST FOR PROPOSAL NO. 2015-RFP-08

PRIORITY BASED BUDGETING SERVICES

RFP Due Date: 10:00 A.M., June 1, 2015

Location: City of Joplin
City Manager's Department
602 South Main
Joplin, MO 64801

Staff: Sam Anselm, City Manager
Email: sanselm@joplinmo.org

Phone: 417-624-0820 ext. 201 **Fax:** 417-625-4707

Proposals will be received by the City Manager's Department at the specified location until the time and date cited above. Only proposals received by the correct time and date will be recorded.

Proposals must be submitted in an envelope with the Request for Proposal number and the Vendor's name and address clearly indicated on the envelope. All proposals must be completed in ink or typewritten and submitted by the time and date above.

Consultants are strongly encouraged to carefully read the entire Request for Proposal.

April 17, 2015
Issue Date

CITY OF JOPLIN, MISSOURI
STANDARD INSTRUCTIONS TO PROPOSERS AND CONDITIONS OF REQUEST FOR PROPOSAL

1. **PREPARATION OF PROPOSALS**

A. Proposers are expected to examine the scope of services, delivery schedule, requirements and all instructions of the Request for Proposal. Failure to do so will be at Proposer's risk. In case of a mistake in extension, the unit price(s) will govern.

B. Firm fixed prices shall be bid and include all packing, handling and shipping charges.

C. Unless otherwise indicated prices quoted shall be firm for acceptance for one hundred twenty days from proposal opening and for the specified contract period.

2. SUBMISSION OF PROPOSALS

A. A proposal submitted by a Proposer must (1) be manually signed by the Proposer; (2) contain all information required by the Request For Proposal; (3) be priced as required; (4) be sealed in an envelope or container; (5) be attached to a security deposit if required; and (6) be delivered to the specified department and officially clocked in no later than the exact time and date specified on the Request For Proposal.

B. The sealed envelope or container containing a proposal should be clearly marked on the outside left corner with (1) the official Request For Proposal number and (2) the official closing date and time.

C. Do not submit proposals in response to other solicitations in the same sealed envelope. If more than one proposal is submitted in the same container, your proposal may be rejected as non-responsive.

3. **MODIFICATION OR WITHDRAWAL OF PROPOSALS**

A. Proposals may be modified or withdrawn by written or telegraphic notice received prior to the official closing date and time specified. A proposal may also be withdrawn or modified in person by the Proposer or his authorized representative provided proper identification is presented before the official closing date and time. Verbal phone requests to withdraw or modify a proposal will not be considered.

B. After the official closing date and time, no proposal may be modified or withdrawn.

C. The proposal is firm for acceptance for one hundred twenty (120) days after proposal opening.

4. **PROPOSAL OPENING**

A. Proposal openings shall be public on the date and at the time specified on the proposal form. It is the Proposer's responsibility to assure that his proposal is delivered at the proper time and place of the proposal opening. Proposals which for any reason are not so delivered will be not considered. Offers by telegram, telephone, or facsimile will not be accepted, unless specifically authorized by the Request for Proposal. Proposal files may be examined during normal working hours by appointment.

5. **AWARDS**

A. Unless otherwise stated in the Request For Proposal, cash discounts for prompt payment of invoices will not be considered in the evaluation of prices, if part of the proposal. However, such discounts are encouraged to motivate prompt payment.

B. As the best interest of the City may require, the right is reserved to make awards; to reject any and all proposals or waive any minor irregularity of technicality in proposals received.

C. Awards will be made to the Proposer whose proposal (1) meets the specifications and all other requirements of the Request For Proposal and (2) is the best proposal, considering price, responsibility of the Proposer and all other relevant factors in the criteria for award.

D. Each proposal is received with the understanding that the acceptance in writing by the City of the offer to furnish any or all materials, equipment, supplies or services described therein shall constitute a contract between the Proposer and the City; and shall bind the Proposer to furnish and deliver at the price, and in accordance with the conditions of said accepted proposal and detailed specifications.

6. **OPEN COMPETITION**

A. It is the intent and purpose of the Division of Purchases that the Request for Proposal permits free and open competition. However, it shall be the Proposer's responsibility to advise the Division of Purchases if any language, requirements, etc., or any combination thereof, inadvertently restricts or limits the requirement to a single source or otherwise prohibits the submission of a proposal. The notification should be received by the specified department at least ten days prior to the Request for Proposal closing date and time. The Proposer may submit a notification after the proposal closing provided sufficient time is permitted for a thorough review by the Division of Purchases and its decision will be final.

CITY OF JOPLIN, MISSOURI
STANDARD TERMS AND CONDITIONS OF PURCHASE

A. This contract expresses the complete agreement of the parties and performance shall be governed solely by the terms and conditions contained herein. Changes, additions or modifications hereto must be in writing and signed by the Purchasing Agent.

B. **INVOICES:** An original of the invoice shall be submitted and shall show the purchase order number or contract and contract release number and contain full descriptive information of item or services furnished.

C. **BANKRUPTCY OR INSOLVENCY:** In the event of any proceedings by or against either party, voluntary or involuntary, in bankruptcy or insolvency, or for the appointment of a receiver or trustee or an assignee for the benefit of creditors, of the property of Seller, or in the event of breach of any of the terms hereof including the warranties of the Seller, City may cancel this contract or affirm the contract and hold Seller responsible in damages.

D. **COMPLIANCE WITH APPLICABLE LAWS:** The Seller warrants it has complied with all applicable laws, rules and ordinances of the United States, or any state, municipality or any other governmental authority or agency in the manufacture or sale of the items covered by this contract, including but not limited to all provisions of the Fair Labor Standard Act of 1938, as amended.

E. **INTERPRETATION OF CONTRACT AND ASSIGNMENTS:** The contract shall be construed according to the laws of the State of Missouri. The contract, or any rights, obligations or duties hereunder may not be assigned by Seller without the City's written consent or any attempted assignment without such consent shall be void.

F. **TERMINATION OF CONTRACT:** The City reserves the right to terminate the contract at any time if any of the provisions of the contract are violated by the Contractor or by any of his Subcontractors, in the sole judgment and discretion of the City. In the event of such termination, the Contractor shall be liable for any excess costs incurred by the City. If the contract is so terminated, the City may purchase upon such terms and in such manner as the Purchasing Agent may deem appropriate, supplies or services similar to those so terminated, and that the Contractor will be liable for excess costs occasioned thereby.

G. **NON-DISCRIMINATION IN EMPLOYMENT:** In connection with the furnishing of supplies or performances or work under this contract, the Contractor agrees to comply with the Fair Labor Standard Act, Fair Employment Practices, Equal Opportunity Employment Act, and all other applicable federal and state laws, and further agrees to insert the foregoing provision in all subcontracts awarded hereunder.

H. **PROVISIONS BY LAW DEEMED INSERTED:** Each and every provision of the law and clauses required by law to be inserted in this contract will be deemed to be inserted herein and will read and be enforced as though it were included herein, and if through mistake, or otherwise any such provision is not inserted, then upon the application of either party the contract will be physically amended to make such insertion or correction.

I. **ASSIGNMENT:** The Contractor shall not assign any interest in this contract, and shall not transfer any interest in the same (whether by assignment or novation), without prior written consent of the City thereto. Provided, however, that claims for money due or to become due to the Contractor from the City under this contract may be assigned to a bank, trust company, or other financial institution without such approval. Notice of such assignment or transfer shall be furnished in writing promptly to the City. Any such assignment is expressly subject to all rights and remedies of the City under this agreement, including the right to change or delete activities from the contract or to terminate the same as provided herein, and no such assignment shall require the City to give any notice to any such assignee of any actions which the City may take under this agreement, though City will attempt to so notify any such assignee.

1.0 Scope of Work

1.1 Purpose

The City is interested in obtaining the services of a priority based budgeting consulting firm to develop a new budget process utilizing “Priority Based Budgeting” principles. The successful vendor will help the City evaluate services against each other and determine which services are best aligned with the City government’s and the community’s priorities. The City seeks assistance in implementing a new budgeting process focused around developing a budget that achieves major priorities of the community and the Council, rather than a traditional departmental budget approach.

The City’s budget process will be highly collaborative and involve staff from throughout the organization to develop a proposed budget that focuses on priorities that City leaders and citizens would like to see achieved by local government with the limited resources available. The City seeks experienced professional support to facilitate a citizen engagement process, facilitate the priority based budget process and provide general support through the implementation of the new process.

It is the goal of the City to achieve fiscal sustainability, while continuing to provide the best services possible to the citizens and the community. The City intends to award a contract for priority based budgeting services for a three (3) year term, with an option for a one-year extension.

1.2 Background

The City, incorporated in 1873, is located in the southwest corner of Missouri and is the State’s fourth largest metropolitan area. The City is a Home Rule Charter City and has operated under the council-manager form of government since 1954. Policymaking and legislative authority are vested in the governing council, consisting of nine members. The council is responsible for passing ordinances, adopting the budget, appointing committees and hiring the government’s manager, attorney, clerk, and municipal judge. The City Manager is responsible for day-to-day operations of the City and for appointing the heads of the City’s departments. While the City’s census population is 50,150, the daytime population is approximately 240,000.

The City’s fiscal year begins on November 1. The adopted FY 2015 budget is nearly $168 million, of which $82.3 million represents capital expenditures. Following the EF-5 tornado that struck our community on May 22, 2011, the City has received over $200 million in various grant funds to spend over the next four years. The FY 2015 general fund budget is nearly $31 million. The adopted budget includes 585 FTE’s. The City has thirteen departments.

Due to cautious fiscal policies, the City has endured the recent recession with no cuts in services or personnel. However, the City anticipates that circumstances will make it more difficult to fund some operations in coming years, and is seeking a way to accurately identify program costs and to give the City tools to determine which programs it will offer in the future.

1.3 Requirements

1.3.1 Scope of Work Requirements

Below is a general outline of the anticipated scope of work. However, the final scope of work will be negotiated with the successful proposer.

The successful vendor will help the City evaluate services against each other and determine which services are best aligned with the City government's and the community's priorities. It will help the City Council, the City staff and the public learn how to value services and to divest themselves of lower-priority services. The successful vendor should also equip the City with the information/programs/tools necessary to address future challenges as they arise. This would include a method that can be used to evaluate new, future program offerings in comparison to existing services, and to combine services where most desirable.

The selected consultant will be expected to provide advisory, analytical and facilitation assistance in the establishment of the City's Priority Based Budgeting process. The selected Consultant shall work with at the direction of the City Manager. Services required of the selected Consultant may include, but not be limited to, the following:

A. Assist the City in diagnosing fiscal problems and treatment options.

B. Assist the City in defining goals for the organization.

C. Assist the City in prioritizing resource allocation for the most valuable programs and services.

D. Provide training and advisory assistance to City staff in creating and reviewing program scores.

E. Develop and support the peer review process to validate program scores, prior to the final update of the allocation tool. This may include participation of City Council and other external stakeholders, as well as City staff.

F. Assist with the calculation of departmental target budgets to ensure resource allocation starts with available revenues.

G. Provide training and coaching in the utilization of the allocation tool during the budget development process.

H. Be available for meetings as required.

I. Assist with the presentation of the first complete priority based budget to demonstrate how the program prioritization process was used to enhance decision-making. This would include at least one presentation to City Council.

J. Explore ideas with City staff and City Council for additional citizen engagement in future budget years.

1.4 Content Requirements

Each Proposal shall include the following:

The Proposal must detail how the Contractor will provide the Scope of Services required by this RFP and the cost of providing those services. Proposal costs submitted should reflect a three-year contract with the option for a one (1) year extension. Price guarantees should be included if applicable. Contractors are encouraged to present in their Proposals any alternate or creative means of providing any item specified in the Scope of Services, and the effect that would have on the proposed prices.

1.4.1 Company Profile

Provide the following information relative to your firm:

A. Firm name and business address, including telephone and facsimile numbers, and e-mail address.
B. Year established (include former firm names and year established). Identify the country and state in which the firm was incorporated or adopted.
C. Provide the Firm's type of ownership and, if applicable, parent company or subsidiaries. Include dates of any corporate mergers and/or acquisitions, including all present and former subsidiaries with dates of any and all restructuring since the founding date.
D. Clarify the business address and telephone number of the office(s) at which the work is to be accomplished (if different than item #A). Also include the name, address, and telephone number of the project manager, if different than item A.

1.4.2 Organizational Structure

Describe your firm's organizational structure and discuss how you anticipate organizing your project team for this engagement.

1.4.3 Key Staff Resumes

Provide a listing of key project team members who will be involved. Provide resumes for the project manager and other key managerial staff and technical information, which include work experience, education, and any work-related publications. The key people proposed for the project must actually participate. If, because of extenuating circumstances, a member must be replaced, the City must approve the new member.

1.4.4 Experience and Qualifications

Set forth your experience and qualifications as they relate to the proposed project in terms of technical scope, tasks involved, deliverable products, and other elements of the work as they relate to the evaluation criteria and all requirements of this RFP. The City seeks the following minimum qualifications:

A. Demonstrated expertise in priority based budgeting.
B. Relevant experience providing training and support to multiple local governments implementing priority based budgeting.

C. Relevant experience in facilitating a citizen engagement process.
D. Extensive knowledge and experience with local government, governmental finance and budget processes.
E. Strong written, verbal and interpersonal communication skills.
F. Resource capacity to complete tasks on time.
G. Experience in presenting findings in a public setting.

The Proposal should provide all information which the Contractor considers pertinent to its qualifications for performing the work called for by the RFP; including, but not limited to work detailed in 1.3.1.

1.4.5 References

Each Contractor must furnish a minimum of five (5) references. At least three (3) of the five (5) references should be from organizations of similar size and complexity as the City of Joplin. Each reference must identify and describe the project worked on, and specify the originating and final project manager for the party providing the reference. References may or may not be reviewed or contacted, at the sole discretion of the City.

1.4.6 Pending Claims

Each Contractor must describe any pending or ongoing administrative or judicial proceedings material to its business or finances, including, but not limited to litigation, consent orders, or agreements with state or federal regulatory agencies, and any claims, whether past, current, or pending, that involve work similar to the work sought by this RFP. The nature of any such claim or proceeding must be described, together with its current status, final disposition (if any), and the parties involved.

1.5 Administrative Requirements

1.5.1 RFP Schedule

The City anticipates that the following timetable will apply to this RFP. The dates following the April 17, 2015 RFP issue date are subject to change:

Activity	Date
RFP issued	April 17, 2015
Proposal Submission Deadline	June 1, 2015
Proposed Selection Date	July 1, 2015
Contract Discussions Conclude	August 1, 2015
Contract Effective Date-Council Approval	September 1, 2015

Any question, request for clarification, or request for additional information regarding this RFP should be submitted no later than May 15, 2015 via e-mail to sanselm@joplinmo.org, or in writing, to Sam Anselm (Attn: Priority Based Budgeting Services RFP), City of Joplin, 602 South Main, Joplin, MO 64801. No oral response by any employee or agent of the City shall be binding on the City or shall in any way be considered a commitment by the City. If a Contractor finds any inconsistency or ambiguity in the RFP, the Contractor is requested to contact the City Manager's Department, at the above address.

1.6 Proposal Selection and Evaluation

1.6.1 Proposal Evaluation Process

Proposals, which the City determines in its sole discretion, that are deemed responsive to this RFP, will be reviewed and evaluated by the City. The City reserves the right to request Contractors to make one or more presentations to the City at the City's offices at the Contractor's sole cost and expense, addressing Contractors' ability to achieve the objectives of this RFP. Proposals will be evaluated, in part, according to whether the Contractor meets the minimum qualification and submits a proposal complying with all of the requirements of this RFP.

Evaluation of vendor proposals will be based on the following criteria:

30%	Methodology - that the vendor will use to conduct work outlined in RFP and evidence of ability to perform the work described herein.
25%	Experience – previous experience performing related projects of complex nature, including, but not limited to, similar size and type of organization.
15%	References – will be based on references submitted as part of RFP, but can include clients not submitted.
25%	Cost of proposal
5%	Staff - capability and availability of professional staff to serve the City of Joplin in a competent and timely manner.

1.6.2 Responsibility for Costs

The Contractor shall be fully responsible for all costs associated with the development, preparation, transmittal, and submission of any Proposal or material submitted in response to this RFP. The City assumes no contractual or other obligations as a result of the issuance of this RFP, the preparation or submission of a Proposal by a Contractor, the evaluation of Proposals, or the selection of any Contractor for further negotiations.

1.7 Confidentiality/Public Disclosure

The successful Contractor shall treat all information obtained from the City, which is not generally available to the public as confidential and proprietary to the City. Successful Contractor shall exercise all reasonable precautions to prevent any information derived from such sources from being disclosed to any other person. Successful Contractor agrees to indemnify and hold harmless the City, its officials and employees, from and against all liability, demands, claims, suits, losses, damages, causes of action, fines and judgments (including attorney's fees) resulting from any use or disclosure of such confidential information by successful Contractor or any person acquiring such information, directly or indirectly, from successful Contractor.

By submission of a proposal, Contractors acknowledge and agree that the City, as a municipal corporation, is subject to state and local public disclosure laws and, as such, is legally obligated to disclose to the public documents, including proposals, to the extent required hereunder. Without limiting the foregoing sentence, the City's legal obligations shall not be limited or expanded in any way by a Contractor's assertion of confidentiality or proprietary data.

1.8 Contract Terms and Conditions

The City may condition award of the Contract on the Contractor's acceptance of the terms and conditions contained in the form of agreement attached hereto and made a part hereof as Exhibit A. Contractors may submit with its Proposal, written objections to the terms and conditions established in this RFP and/or agreement by identifying the specific section(s) and paragraph(s) objected to, stating the reason(s) for the objection and proposing alternative terms. Should Contractor object to any of the terms and conditions established in this RFP, including the form of agreement, the City reserves the right, in its sole discretion, to permit Contractor to rescind any or all such exceptions at any time prior to award of a contract. The City, in its sole discretion, may evaluate proposals according to whether the Contractor objects to terms and conditions and if Contractor does object, the number and type of objections. In no event shall the City's selection of a Contractor for further negotiations constitute acceptance of any objection or proposed alternative to the terms and conditions established in this RFP. The City reserves the right, however, to add, delete, revise, or negotiate terms and conditions different than those included in the RFP, if, in the sole judgment of the City, it is in the best interest of the City to do so.

2.0 FORMAT AND CONTENT OF PROPOSAL

2.1 Proposal Terms and Conditions

The following terms and conditions apply to submitting proposals in response to this Request for Proposal:

2.2 Interviews

The City reserves the right to conduct personal interviews or require presentations of any or all proposers prior to selection. The City will not be liable for any costs incurred by the proposer in connection with such interviews/presentations (i.e. travel, accommodations, etc.)

2.3 Request for Additional Information

The proposer shall furnish such additional information as the City of Joplin may reasonably require. This includes information which indicates financial resources as well as ability to provide and maintain the system and/or services. The City reserves the right to make investigations of the qualifications of the proposer as it deems appropriate.

2.4 Acceptance/Rejection/Modification to Proposals

The City reserves the right to negotiate modifications to proposals that it deems acceptable, reject any and all proposals, and to waive minor irregularities in the procedures.

2.5 Proposals Binding

All proposals submitted shall be binding for one hundred twenty (120) calendar days following the opening.

2.6 Proprietary Information

In accordance with Public Records Law, and except as may be provided by other applicable State and Federal law, all proposers should be aware that Requests for Proposals and the responses thereto are in the public domain. However, the proposers are requested to identify specifically any information contained in their proposals which they consider confidential and/or proprietary and which they believe to be exempt from disclosure, citing specifically the applicable exempting law.

All proposals received from proposers in response to this Request for Proposal will become the property of the City of Joplin and will not be returned to the proposers. In the event of contract award, all documentation produced as part of the contract will become the exclusive property of the City.

2.7 Proposer's Certification

By submitting a proposal, the proposer certifies that the proposal has been fully read and understood. The proposer has full knowledge of the scope and nature and quality of work to be performed. The proposer further certifies that no employee of the City has any direct or indirect financial interest in any resultant contract, and that no gratuities will be offered or provided to the City of Joplin employees or their family members.

2.8 Non-exclusive Contract

The agreement resulting from this RFP shall be a non-exclusive contract, and the City reserves the right to purchase same or like services from other sources the City deems necessary and appropriate.

2.9 Exceptions

If the Offeror desires to take exception to any terms, conditions and requirements of the RFP, the Offeror must clearly state those exceptions on the Affidavit of Compliance. Exceptions taken by the Offeror may be considered in the evaluation of proposals.

2.10 Late proposals

Proposals received by the City after the time specified for receipt will not be considered. Proposers shall assume full responsibility for timely delivery of the proposals to the location designated for receipt of proposals. The City of Joplin is not responsible for the U.S. Mail or private couriers in regards to mail being delivered by the specified time so that a proposal can be considered. All proposals will be received at the time and place specified and made available for public inspection when an award decision is made.

2.11 Completeness

All information required by the Request for Proposal must be supplied to constitute a legitimate proposal. The City of Joplin reserves the right to use any and all information presented in any response to the Request for Proposal. Acceptance or rejection of the RFP does not affect this right.

2.12 Execution of Agreement

It is anticipated the City will make their selection of a firm by July 1, 2015. The successful proposer shall enter into a contract with the City for the performance of work awarded to him and shall simultaneously provide any required bonds, indemnities and insurance certificates by August 1, 2015. A copy of the sample agreement is attached. Failure to comply within the established deadline for submittal of required documents may be grounds for cancellation of the award.

3.0 SUBMISSION OF PROPOSALS

In order for the City to adequately compare proposals and evaluate them uniformly and objectively, all proposals shall be submitted in accordance with this format. The proposal should be prepared simply and economically, providing straight-forward and concise information as requested.

3.1 Submission Format

1. Title Page: The complete legal name, address, Federal ID number or Social Security number, permanent address and telephone number of the Offeror including the name of the person to contact for discussion of the proposal.
2. Table of Contents.
3. Letter of Transmittal - Limit to one (1) or two (2) printed pages.
4. Requirements – as listed in 1.3 thru 1.5 of the RFP.

3.2 Offer and Schedule of Professional Fees and Expenses

The undersigned has thoroughly examined the entire Request for Proposal (RFP), including all amendments thereto, hereby offers to furnish all services in accordance with the requirements of the Request for Proposal, as described in the proposal attached hereto and incorporated herein, as follows:

PROVIDE A COMPLETE BREAKDOWN OF COSTS.

Scope of Work Services: Complete the project set forth in the Scope of Work at the fees and as described in the Offeror.

Not to exceed $ _____

3.3 Proposal Due Date

Sealed proposals with one (1) original and five (5) complete copies will be received at the Finance Department no later than 10:00 a.m. June 1, 2015. Proposals will not be accepted after this time. Proposals shall be addressed as follows:

For Mail or Hand Delivery
CITY OF JOPLIN
SAM ANSELM
CITY MANAGER
602 SOUTH MAIN
JOPLIN, MO 64801
Submitted envelopes should be marked: "REQUEST FOR PROPOSAL NO. 2015-RFP-08: PRIORITY BASED BUDGETING SERVICES "

3.4 Proposal Evaluation Process

The steps and activities in the proposal process will include the following:

3.4.1 The City will review and evaluate all proposals submitted in response to this Request for Proposals (RFP). The City shall conduct a preliminary evaluation of all proposals on the basis of the information provided and other evaluation criteria as set forth in this Request for Proposals or as reasonably determined by the City.

3.4.2 The City will first review each proposal for compliance with the minimum qualifications and mandatory requirements of the RFP. Failure to comply with any mandatory requirements may disqualify a proposal.

3.4.3 Proposals will then be evaluated and rated in accordance with the evaluation criteria. A shortlist will be developed listing the highest ranked proposals.

3.4.4 The City will confer with all responsible proposers who have been short listed and may arrange, if necessary, for interviews/presentations by the short listed firms.

3.4.5 The City reserves the right to conduct pre-award discussions and/or pre-contract negotiations with any or all responsive and responsible proposers who submit proposals determined to be reasonably acceptable of being selected for award. Proposers shall be accorded fair and equal treatment with respect to any opportunity for discussion and revision of proposals and such revisions may be permitted after submission of proposals and prior to award of a contract.

3.4.6 The City reserves the right to reject any and all proposals and to waive minor irregularities. The City further reserves the right to seek new proposals when such a procedure is reasonable and in the best interests of the City to do so.

EXHIBIT A

CONTRACT NO._____

ADDRESS & PHONE OF CITY
City Manager's Department
602 South Main
Joplin, MO
417-624-0820

NAME, ADDRESS & PHONE OF CONTRACTOR

AGREEMENT

THIS AGREEMENT, made and entered into this _____ day of _____, 2015, by and between the City of Joplin, a municipal corporation of the State of Missouri, hereinafter referred to as the "City" with offices at 602 South Main, Joplin, Missouri and _____ hereinafter referred to as the "Consultant."

WITNESSETH:

WHEREAS, the City of Joplin desires to engage the Consultant to render certain services hereinafter described in Request For Proposal 2015-RFP-08 which Request For Proposal is attached hereto and incorporated herein as Exhibit A; and

WHEREAS, the Consultant submitted a proposal dated June 1, 2015 which proposal is attached hereto and incorporated herein as Exhibit B; and

WHEREAS, the Consultant has become the lowest and best Offeror for performing the services listed in the Notice of Award, which Notice of Award is attached hereto and incorporated herein as Exhibit C;

NOW, THEREFORE, the parties to the contract agree to the following:

1. The City agrees to engage the Consultant and the Consultant agrees to perform, in strict accordance with Exhibit A, and within the time specified therein, the services set forth in Exhibit C.

2. The services of the Consultant shall commence only as authorized in writing by City purchase order or other written notice and shall be undertaken and completed as promised by the Consultant in Exhibit B. The term of the Agreement shall be for the period specified in Exhibit C.

3. The City agrees to pay the Consultant in accordance with the prices and terms set forth in Exhibit B for work authorized by City purchase order or other written Notice by the City upon presentation of proper invoice and inspection by the City of work completed by the Consultant.

4. All information, data, and reports as are existing, available and necessary for the carrying out of the work, shall be furnished to the Consultant without charge, and the parties shall cooperate with each other in every way possible in carrying out the scope of services.

5. The Consultant shall fully coordinate its activities in the performance of the contract with the activities of the City.

6. The Consultant represents that Consultant will secure at Consultant's own expense, all personnel required to perform the services called for under this contract by Consultant. Such personnel shall not be employees of or have any contractual relationship with the City except as employees of the Consultant. All of the services required hereunder will be performed by the Consultant or under Consultant's direct supervision and all personnel engaged in the work shall be fully qualified and shall be authorized under state and local law to perform such services. None of the work or services

covered by this contract shall be subcontracted without the written approval of the City.

7. **Termination:** If, through any cause, the Consultant shall fail to fulfill in a timely and proper manner Consultant's obligations under this contract, or if the Consultant shall violate any of the covenants, agreements, or stipulations of this contract, the City shall thereupon have the right to terminate this contract by giving written notice to the Consultant of such termination and specifying the effective date thereof, at least five (5) days before the effective day of such termination. The City may, without cause, terminate this contract upon 30 day's prior written notice. **In either such event, all finished or unfinished documents, data, studies, reports, or other materials prepared by the Consultant shall, at the option of the City become its property.** The Consultant shall be entitled to receive just and equitable compensation for any satisfactory work completed. Notwithstanding the above, the Consultant shall not be relieved of liability to the City for damages sustained by the City by virtue of any such breach of the contract by the Consultant.

8. **Assignment:** The Consultant shall not assign any interest in this contract, and shall not transfer any interest in the same (whether by assignment or novation), without prior written consent of the City thereto. Provided, however, that claims for money due or to become due to the Consultant from the City under this contract may be assigned to a bank, trust company, or other financial institution without such approval. Notice of such assignment or transfer shall be furnished in writing promptly to the City. Any such assignment is expressly subject to all rights and remedies of the City under this agreement, including the right to change or delete activities from the contract or to terminate the same as provided herein, and no such assignment shall require the City to give any notice to any such assignee of any actions which the City may take under this agreement, though City will attempt to so notify any such assignee.

9. Any reports, data, or similar information given to or prepared or assembled by the Consultant under this contract which the City requests to be kept as confidential shall not be made available to any individual or organization by the Consultant without prior written approval of the City.

10. **Modification of Contract:** The Scope of Work to be done under the Contract shall be subject to modification and supplementation upon the written Agreement of the duly authorized representatives of the Contracting parties. No provision in the Contract shall be changed or modified without the execution of a formal amendment to the Contract, mutually agreed to by the City and the Consultant and processed through the Division of Purchases. Upon request by the City, the Consultant shall provide an estimate of cost of any additional work or services to be incorporated by a modification to the Scope of Work and the Contract.

11. **Contract Documents:** The agreement between the City of Joplin and the Consultant shall consist of (1) The Contract form which embodies the requirements contained herein, (2) the Request for Proposal, and any amendments thereto and, (3) the proposal, as accepted, submitted in response to the Request for Proposal. In the event of a conflict in language between the documents referenced above, the provisions and requirements set forth and/or referenced in the Contract shall govern over all other documents, and the Request for Proposal and amendments thereto shall govern over the Consultant's Proposal and amendments thereto. However, the City reserves the right to clarify any Contractual relationship in writing with the concurrence of the Consultant, and such written clarification shall govern in case of conflict with the applicable requirements stated in the Request for Proposal or the Consultant's proposal. In all other matters not affected by the written clarification, if any, the Request For Proposal shall govern. The Consultant is cautioned that the proposal shall be subject to acceptance without further clarification.

12. **Appropriation of Funds:** In the event that funds are not appropriated by the Council of the City of Joplin for any term of the contract or extension thereto or portion of any term of the contract which falls in a fiscal period other than a fiscal period for which funds have been appropriated, the contract shall terminate without notice at the end of the fiscal period for which funds are appropriated.

13. The Consultant agrees and understands that the City of Joplin's Agreement to the Contract may be predicated, in part and among other considerations, on the utilization of the specific individual(s)

and/or personnel qualification(s) as identified and/or described in the Consultant's proposal. Therefore, the Consultant agrees that no substitution of such specific individuals and/or personnel qualifications shall be made without the prior written approval of the City. The Consultant further agrees that any substitution made pursuant to this paragraph must be equal or better than originally proposed and that the City's approval of a substitution shall not be construed as an acceptance of the substitution's performance potential. The City of Joplin agrees that an approval of a substitution will not be unreasonably withheld.

14. **General Independent Contractor Clause:** This agreement does not create an employee/employer relationship between the parties. It is the parties intention that the Contractor will be an Independent Contractor and not the City's employee for all purposes, including but not limited to, the application of the Fair Labor Standards Act minimum wage and overtime payments, Federal Insurance Contributions Act, the Social Security Act, the Federal Unemployment Tax Act, the provisions of the Internal Revenue code, Missouri revenue and taxation laws, Missouri Workers' Compensation and unemployment insurance laws. The Contractor will retain sole and absolute discretion in the judgment of the manner and means of carrying out the Contractor's activities and responsibilities hereunder. The Contractor agrees that it is a separate and independent enterprise from the public employer, that is has a full opportunity to find other business, that is has made its own investment in its business, and that it will utilize a high level of skill necessary to perform the work. This agreement shall not be construed as creating any joint employment relationship between the Contractor and the City, and the City will not be liable for any obligation incurred by the Contractor, including but not limited to unpaid minimum wages and/or overtime premiums.

15. The Consultant shall not be entitled to any of the benefits established for the employees of the City nor be covered by the Workers Compensation Program of the City.

16. **Certification of Non-Resident/Foreign Consultants:** If the Consultant is a foreign corporation or non-resident Consultant, it is agreed that the Consultant shall procure and maintain during the life of this contract:

    A. A certificate of authority to transact business in the State of Missouri from the Secretary of State, unless exempt pursuant to the provisions of Section 351.570 RSMo.

    B. A certificate from the Missouri Director of Revenue evidencing compliance with transient employer financial assurance law, unless exempt pursuant to the provisions of Section 285.230 RSMo.

17. **Nondiscrimination:** The Consultant agrees in the performance of this contract not to discriminate on the ground or because of race, creed, color, national origin or ancestry, sex, religion, handicap, age, or political opinion or affiliation, against any employee of Consultant or applicant for employment and shall include a similar provision in all subcontracts let or awarded hereunder.

18. Consultant covenants that it presently has no interest and shall not acquire any interest, direct or indirect, which would conflict in any manner or degree with the performance of services to be performed under this contract. The Consultant further covenants that in the performance of this contract no person having such interest shall be employed.

19. **Consultant's Responsibility for Subcontractors**: It is further agreed that Consultant shall be as fully responsible to the City for the acts and omissions of its subcontractors, and of persons either directly or indirectly employed by them, as Contractor is for the acts and omissions of persons it directly employs. Consultant shall cause appropriate provisions to be inserted in all subcontracts relating to this work, to bind all subcontractors to Consultant by all the terms herein set forth, insofar as applicable to the work of subcontractors and to give Consultant the same power regarding termination of any subcontract as the City may exercise over Consultant under any provisions of this contract. Nothing contained in this contract shall create any contractual relation between any subcontractor and the City or between any subcontractors.

20. The certificates of insurance, including evidence of the required endorsements of the policies shall be filed with the City of Joplin within ten (10) days of the date of receipt of the Award of the contract to the Consultant and prior to the start of work. All insurance policies shall provide thirty (30) days written notice to be given by the insurance company in question, prior to modification or cancellation of insurance. Such notices shall be mailed, return receipt requested to:

City Attorney
City of Joplin
602 South Main
Joplin, MO 64801

21. **Liability and Indemnity:**

A. In no event shall the City be liable to the Contractor for special, indirect, or consequential damages, except those caused by the City's gross negligence or willful or wanton misconduct arising out of or in any way connected with a breach of this contract. The maximum liability of the City shall be limited to the amount of money to be paid or received by the City under this contract.

B. The Contractor shall defend, indemnify and save harmless the City, its elected or appointed officials, agents and employees from and against any and all liability, suits, damages, costs (including attorney fees), losses, outlays and expenses from claims in any manner caused by, or allegedly caused by, or arising out of, or connected with, this contract, or the work or any subcontract there under (the Contractor hereby assuming full responsibility for relations with subcontractors), including, but not limited to, claims for personal injuries, death, property damage, or for damages from the award of this contract to Contractor.

C. The Contractor shall indemnify and hold the City harmless from all wages or overtime compensation due any employees in rendering services pursuant to this agreement or any subcontract, including payment of reasonable attorneys' fees and costs in the defense of any claim made under the Fair Labor Standards Act, the Missouri Prevailing Wage Law or any other federal or state law.

D. The indemnification obligations of Contractor hereunder shall not be limited by any limitations as to the amount or type of damages, compensation or benefits payable by or for the Contractor, under any federal or state law, to any person asserting the claim against City, its elected or appointed officials, agents and employees, for which indemnification is sought.

E. The indemnification obligations herein shall not negate, abridge or reduce in any way any additional indemnification rights of the City, its elected or appointed officials, agents and employees, which are otherwise available under statute, or in law or equity.

F. Contractor affirms that it has had the opportunity to recover the costs of the liability insurance required in this agreement in its contract price. Contractor's obligation under this agreement to defend, indemnify and hold harmless any person from that person's own negligence or wrongdoing is limited to the coverage and limits of the applicable insurance.

22. **Conflict of Interest:** No salaried officer or employee of the City and no member of the City Council shall have a financial interest, direct or indirect, in this contract. A violation of this provision renders the contract void. Any federal regulations and applicable provisions in RSMo. Chapter 105 shall not be violated.

23. **Entire Agreement:** This agreement, including the contract documents contained or referenced herein, constitutes the entire agreement between the parties. No modification, amendment, or waiver of any of the provisions of this agreement shall be effective unless in writing specifically referring hereto, and signed by both parties.

24. **Waiver:** No provision of the contract documents shall be construed, expressly or by implication, as a waiver by the City of any existing or future right or remedy available by law in the event of any claim of default or breach of contract.

25. **Jurisdiction:** This agreement and every question arising hereunder shall be construed or determined according to the laws of the State of Missouri. Should any part of this agreement be adjudicated, venue shall be proper only in the Circuit Court of Jasper County, Missouri.

26. **Notices:** All notices required or permitted hereunder and required to be in writing may be given by first class mail addressed to Division of Purchases, 602 South Main, Joplin, Missouri, 64801, and the Consultant at the address indicated on Affidavit of Compliance form. The date of delivery of any notice shall be the date falling on the second full day after the day of its mailing.

IN WITNESS WHEREOF the parties have hereunto set their hands and seal the date first above written.

CITY OF JOPLIN, MISSOURI

By: _____
Samuel L. Anselm, City Manager

CONSULTANT

_____
Company Name

By: _____
Signature

Name: _____
Print or type

Title: _____

APPROVED AS TO FORM:

_____
Peter C. Edwards, City Attorney

CENTER FOR PRIORITY BASED BUDGETING

Using a Unique Lens to Focus Community Resources on Results

Request for Proposal *NO. 2015-RFP-08*

PRIORITY BASED BUDGETING SERVICES

A Proposal for the

City of Joplin, Missouri

City Manager's Department
602 South Main
Joplin, Missouri 64801

Center for Priority Based Budgeting
13701 W. Jewell Avenue, Suite 28
Lakewood, CO 80228
ID #46-3393419
Contact: Jon Johnson
720-361-3710

CPBB
CENTER FOR PRIORITY BASED BUDGETING
"Using a Unique Lens to Focus Community Resources on Results"

May 22, 2015

Mr. Sam Anselm
City Manager
City of Joplin
602 South Main
Joplin, MO 64801

RE: RFP #2015-RFP-08 – Priority Based Budgeting Services

Dear Mr. Anselm,

The ***Center for Priority Based Budgeting (CPBB)*** is extremely pleased to provide this proposal in response to ***the City of Joplin's*** request for advisory, analytical and facilitation assistance in the development and implementation of a ***Priority Based Budgeting*** process. We believe that our unique and timely results-based approach to resource allocation addresses the needs of local governments everywhere as they strive to balance fiscal responsibility with long-term financial sustainability.

Our special connection to ***the City of Joplin*** makes this opportunity extremely interesting and important to us. Being the hometown of co-founder Jon Johnson and also being a jurisdiction that he served for many years, it would be personally meaningful to bring this process to the community that has given so much to him. During his tenure, the City had to rebuild its financial foundation after it suffered a catastrophic investment loss in the mid-1990's. Thankfully, the City recovered, with no significant reduction in staff or services and took positive steps to strengthen its controls over financial operations as it looked to the future. The opportunity to again be part of the recovery and rebuilding process stemming from the catastrophic and devastating natural disaster of May 22, 2011, would be extremely rewarding. We sincerely believe that the tools developed through the ***PBB*** process will truly help community leaders make decisions for the future that will solidify the City's long-term financial sustainability as it continues to recover, grow and thrive in the years ahead.

It is gratifying and rewarding for ***CPBB*** to be able to offer its assistance to ***the City of Joplin***. ***CPBB*** very much respects the vision that you have for your community and sees this work as another step towards achieving that vision. it will be an honor and a pleasure to work with you to help it achieve all the benefits and outcomes of our ***Fiscal Health and Wellness through Priority Based Budgeting*** process, which we believe will lead local governments to more open, transparent and sustainable decision-making for years to come.

Best Regards,

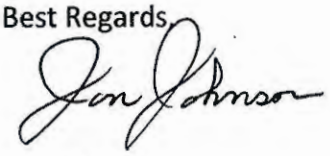



Jon Johnson ***Chris Fabian***

Center for Priority Based Budgeting
13701 W. Jewell Avenue, Suite 28
Lakewood, CO 80228
720-361-3710
jjohnson@pbbcenter.org or cfabian@pbbcenter.org
Website - www.pbbcenter.org

Table of Contents

1.4 CONTENT REQUIREMENTS.....1

1.4.1 Company Profile 1

1.4.2 Organizational Structure.....3

1.4.3 Key Staff Resumes 5

1.4.4 Experience and Qualifications 7

1.4.5 References 25

1.4.6 Pending Claims 30

Copyright ©2009 by Chris Fabian and Jon Johnson d/b/o the ***Center for Priority Based Budgeting.***

Content Requirements

1.4.1 Company Profile



"Challenges facing local governments today literally requires a new way to see. It's as if our vision has been blurred by the extraordinary stress of managing in this complex economic environment. Whether attempting to rebuild in a post-recession climote, or persevering through another year of stagnating or declining revenues, the challenge remains: how to allocate scarce resources to achieve our community's highest priorities. Through the new lens of Fiscal Health and Wellness through Priority Based Budgeting, which provides powerful insights, local governments are making significant breakthroughs."

- Jon Johnson and Chris Fabian, *Seeing Things Differently*, Public Management (PM) Magazine, 2012

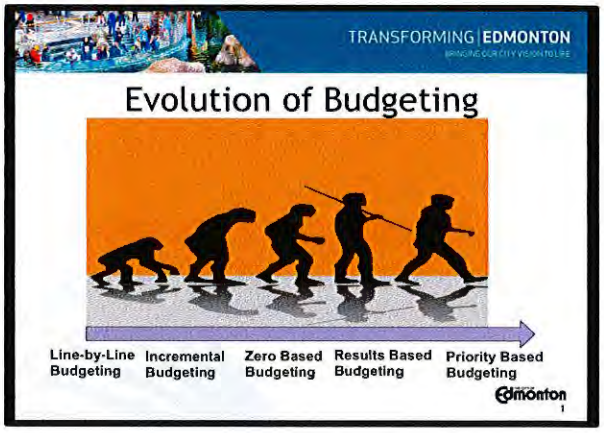

While serving as local government practitioners, ***CPBB*** co-founders Jon Johnson and Chris Fabian developed the process and tools needed to successfully implement this approach to ***Priority Based Budgeting.*** We created this process to address our belief that there needed to be a methodology that would successfully link the stated strategic priorities that an organization strives to accomplish with the way resource allocation decisions are made through the budget process. Because of its specific relevance to local governments needing to address their immediate short-term budgetary distress, our ***Priority Based Budgeting*** process has gained nationwide recognition and has been promoted by the International City/County Management Association *(ICMA)*, the National League of Cities (*NLC*), the Government Finance Officers Association *(GFOA)* and the Alliance for Innovation.

In 2012, the International City/County Management Association (*ICMA*) recognized ***Fiscal Health and Wellness through Priority Based Budgeting*** as a leading practice for local governments. Seeing that the results of this process have helped over eighty (80) communities from across the nation find a common approach in their pursuit of results-oriented resource allocation has been overwhelmingly rewarding. Having ICMA declare this work as a leading practice, encouraging every local government to move toward the achievement and implementation of ***Priority Based Budgeting*** furthers the purpose and mission of ***CPBB*** for the future.

In collaboration with GFOA, we were honored to co-author "***Anatomy of a Priority Based Budget Process***", a white paper published by GFOA in 2011, which establishes and documents a step-by-step methodology for any organization to successfully implement ***Priority Based Budgeting***. This white-paper relied heavily on our experiences and the lessons learned from the pioneering organizations we assisted from 2009 through 2010 as they implemented this unique and innovative process. Since that time, we have significantly enhanced the process even further, incorporating citizen engagement strategies, addressing succession planning, and assisting in the framing of labor negotiations.

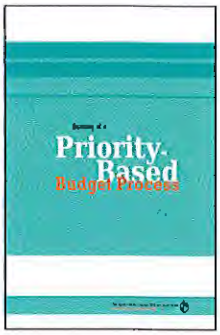

In the eighty-plus (80+) local governments that ***CPBB*** has provided advisory leadership in the implementation of ***Fiscal Health and Wellness through Priority Based Budgeting,*** we have seen that this process not only provides a way in which an organization can make better short-term resource allocation decisions based on the relative priority of the various programs and services it offers, but also provide a new way to link budget decisions to the strategic results and outcomes that the organization wishes to achieve for the long-term. Furthermore, our "***Resource Alignment Diagnostic Tool***" is truly unlike anything previously available to local governments, providing (*as the City Manager of Fairfield, California coined the phrase*) "***a new and unique lens***" on how government spending is aligned with priorities.

The ***Center for Priority Based Budgeting (CPBB***) is a S-Corporation, registered in the State of Colorado (USA) established in 2013. Prior to that time, ***CPBB*** operating as an incubator project from 2010 through 2013 under the umbrella of the *National Environmental Health Association*, a non-profit agency also located in Denver, Colorado. ***CPBB*** offices are located at ***13701 W. Jewell Avenue, Suite 28, Lakewood, CO 80228***. Co-founders Jon Johnson and Chris Fabian can be directly contacted by phone at ***720-361-3710*** or by e-mail at: ***jjohnson@pbbcenter.org or cfabian@pbbcenter.org.***

Supported by three additional professional staff and a team of independent strategic advisors, we are well-equipped to provide technical and advisory services to assist local governments, school districts, faith-based organizations and other non-profit agencies achieve ***Fiscal Health and Wellness through Priority Based Budgeting***. One of its strategic advisors, Ms. Kathie Novak, is a former elected official, serving her community for over nineteen years, eight of those as Mayor. She was also very active in the National League of Cities (NLC), serving as its President in 2009 . Knowing that the City of Joplin has a close affiliation with NLC, Ms. Novak is an available resource to help engage the City Council in the PBB process. As Kathie states:

"I so believe in what the Center is doing...helping elected officials and communities really understand their financial situation, better communicate that information to their citizens, and use that information to make the best decisions possible for their communities in light of changing economic situations. The tools they have developed help policy makers move from the "What we know we need/would like to do" to the "How do we actually make it happen." I wish I had this available when I was in office!"

The creative and innovative process, developed by ***CPBB,*** enables communities to reassess their priorities in order to make sound, long-term funding decisions. Establishing a mission-driven organization solidifies ***CPBB's*** focus on being a trusted advisor and a dependable, objective resource, assisting local government leaders who are seeking service excellence, transparency to their stakeholders and a strong desire to achieve the Results that are important to their community.

1.4.2 Organizational Structure

CPBB has implemented their pioneering approach to ***Priority Based Budgeting*** in over 80 organizations across the United States and Canada. Having demonstrated success in helping these other jurisdictions, truly sets us apart as a leader in this particular body of work and makes us uniquely qualified to assist the ***City of Joplin***. As additional, the elements below are of importance as this proposal is being considered:

1. ***CPBB has implemented PBB in organizations and communities of all sizes but many that are equally as large or even larger than the City of Joplin*** – it is of critical importance to note that our team has a successful track record in assisting similarly large and complex organizations as the ***City of Joplin*** in implementing this process. Our list of references will demonstrate that organizations of similar size such as the cities of Boulder, CO, Wheat Ridge, Kenmore, WA, Roswell, GA, Kalamazoo, MI and Plano, TX have successfully brought this process to their communities as well as those that are much larger, including the cities of Cincinnati, OH, Edmonton, AB and Gaston County, North Carolina. Our unique differentiator is that the processes and tools developed by ***CPBB*** have proven effective, scalable, and best of all, repeatable in communities of all sizes and demographics.

2. ***CPBB is currently working within the State of Missouri with an implementation of PBB in the City of Branson, Missouri*** – in similar fashion, CPBB responded to a RFP from the City of Branson in 2013 for a two-year phased-in implementation of a "*Budgeting for Outcomes*" process. Their Finance Director and newly appointed City Manager both determined that **CPBB's** approach of ***Priority Based Budgeting*** was truly the best "fit" to achieve what their Board of Alderman had requested – a way to align the goals set forth in their newly adopted "Community Plan 2030" with the allocation of resources in the budget process. Phase I has been completed and within the next month, the final ***"Resource Alignment Diagnostic Tool"*** is scheduled to be presented to City staff and their Board of Alderman. While they are the first community in Missouri to implement PBB, the City of Joplin would be considered to be a pioneer of this work within the State of Missouri.

3. ***CPBB is has a level of familiarity, a unique perspective and a personal connection the City of Joplin, both as an organization and a community*** – as stated previously, co-founder Jon Johnson lived in the community for over 30 years and served the City organization for five of those years as its Finance Director. He feels a strong commitment to ensure that the process is successfully implemented and that the long-term benefits of PBB will benefit the community where he grew up and where his family still lives

In terms capacity, it is important to note that it is the ***CPBB's*** policy not to propose on any RFP unless it is fully equipped to complete the project on-time and within the agreed upon budget. ***CPBB*** is submitting this proposal with a commitment to the City of Joplin that sufficient capacity exists to complete the scope of work outlined in the recommended ***Scope of Work Requirements*** section.

Project Management

CPBB has established several keys to successfully managing a ***PBB*** project that will be incorporated into a successful project for the ***City of Joplin***. Upon launching the ***PBB*** initiative, ***CPBB*** will recommend an initial "Project Management" meeting to accomplish the following objectives:

- ***Review and discuss "Project Approach" and "Project Plan"*** – coming to a common understanding and agreement about the recommended scope of work ("Project Approach") is fundamental to the success of this project. ***CPBB*** will detail how the ***City's*** work to date can be leveraged and used as a foundation to build upon, as the remaining elements of ***PBB*** are implemented.
- ***Establish City Project Team members and structure*** – ***CPBB*** will share with the ***City*** lessons learned and experiences from other successful ***PBB*** implementations with specific emphasis on establishing a core "*Project Team*." ***CPBB*** has found it very effective to include the following individuals from the City as key members of the project team:
    - ***City Manager OR Assistant City Manager***
    - ***Finance Director OR Assistant Finance Director***
    - ***Budget Officer or Manager (if different from the Finance Director)***
    - ***Strategic Planning Manager/Coordinator***
    - ***Public Information Officer***
    - ***Designated Project Leader/Liaison*** - main point of contact for project related questions, strategy, timeline and scope management. This may be any of the aforementioned individuals or someone designated by them. Typically the Project Manager will coordinate with ***CPBB*** on a regular basis to check in on the project timeline and on deliverables (both ***CPBB*** and City deliverables), coordinating and communicating any necessary adjustments to the project timeline with the rest of the team.
    - ***City Information Technology Support*** – the primary responsibility of this team member is to ensure that City and CPBB technology is tested ahead of any web-based or webinar trainings that take place throughout the project. CPBB will work with this contact to test the PBB Tools, as well as web-based applications (like Go To Meeting, Vimeo, or You Tube typically incorporated into web trainings and recorded sessions).
    - ***City Contracting / Purchasing Contact*** – typically this point of contact will interface with ***CPBB's*** CFO to ensure that any contracting questions are addressed.

While there will certainly be additional team members, having these three role players established up front will ensure that the project proceeds on schedule and on budget.

- ***Review and discuss (and iterate as necessary) change control and problem management procedures*** – ***CPBB*** co-founders Jon Johnson and Chris Fabian will both be directly involved with this project and accessible to the ***City*** for any issues that arise, with Jon serving as the Project Manager. The entire success and credibility of the ***CPBB*** depends on the effective and successful implementation of each ***PBB*** project, thus establishing a clear and open line of communication between ***CPBB*** and the ***City*** is essential.

- ***Review and discuss (and iterate as necessary) project tracking and reporting mechanisms*** – during the initial "Project Management" meeting, ***CPBB*** will recommend the creation of a "checklist" that can be used throughout the implementation process, complete with ***City*** and ***CPBB*** responsibilities and deadlines. Reviewing and adjusting the project timeline ("Project Plan") and the project checklist will be the basis of weekly or semi-weekly coordination meetings between the ***City's*** Project Manager and ***CPBB*** to ensure the implementation process remains on track.

1.4.3 Key Staff Resumes

The ***Center for Priority Based Budgeting***, formed in 2010 by Jon Johnson and Chris Fabian, prides itself in providing creative solutions to local governments struggling to address their own fiscal realities. Our mission is to share our experience and technical knowledge of government financial operations and budget development with organizations that are seeking to achieve ***Fiscal Health and Wellness through Priority Based Budgeting*** that is sustainable for the long-term. Above all, ***CPBB*** strives to be viewed as a trusted advisor and a dependable, objective resource that assists local governments who are seeking service excellence, transparency to their stakeholders and a strong desire to achieve the *Results* that are important to their community. In particular, our experience in dealing with finance-related issues combined with our backgrounds in performance measurement, achievement of efficiencies, and genuine community engagement, makes ***CPBB*** a truly unique and beneficial partner in dealing with fiscal issues and budgetary concerns, especially in these unprecedented and turbulent times.

Prior to the creation of ***CPBB*** in 2010, Jon and Chris worked as independent local government advisors during 2009 after leaving their positions with Jefferson County, Colorado. During that time they were associated with the International City/County Management Association (*ICMA*) as consulting contractors as well as serving as trainers and speakers for the Government Finance Officers Association (*GFOA*) and the Alliance for Innovation.

JON JOHNSON

Jon is co-founder of the ***Center for Priority Based Budgeting***, a mission driven organization whose focus is to help local governments achieve ***Fiscal Health and Wellness*** during these challenging economic times. Jon has more than 28 years of experience as a practitioner in financial administration for municipalities, counties, school districts and public universities. Throughout his career as a finance/budget director, he has been responsible for the management of all aspects of local government finance operations for both small and large organizations. Jon brings with him not only the "hands-on" technical skills associated with the day-to-day financial operations of local governments, but also the ability to apply a diagnostic approach to the analysis needed to assess the ***fiscal health*** of an organization and the management experience to implement the resulting solutions from that diagnostic analysis.

Most recently, Jon served as the Director of Budget and Management Analysis for Jefferson County, Colorado. Previous to that position, he was Assistant Director of Finance for Douglas County, Colorado. Prior to moving to Colorado in 2002, Jon served as the Director of Finance for several municipalities in Missouri, including the City of Blue Springs, the City of Joplin, and the City of Kansas City (MO) Aviation Department. He has also been associated with ICMA as a Senior Management Advisor and with GFOA as a regional trainer and workshop presenter. He served twice on the board of directors for the Missouri

Government Finance Officers Association (GFOA-MO) and was active in its Central and Kansas City chapters. Jon holds a B.A. in political science and a B.S. in accounting from Missouri Southern State University, as well as a master's degree in College Administration from Pittsburg (KS) State University.

CHRIS FABIAN

Chris co-founded the ***Center for Priority Based Budgeting***. During his career, Chris has provided consulting and advisory services to numerous local governments across the country. His consulting experience has focused on public entities at all levels, advising top municipal managers, department heads and program directors from over 60 organizations concerning the fundamental business issues of local government. Of most significance, his work has centered on the budget process as a lever to produce results, accountability and change; performance and outcome-based management; purpose, productivity, and efficiency in operations; and rigorous financial analysis and strategy. Pursing the objectives of *"Budgeting for Outcomes" (BFO)*, Chris was a partner of the consulting team that implemented BFO in Ft. Collins, Colorado, one of the leading organizations using this approach and is now assisting with their conversion to the ***Priority Based Budgeting*** model he developed in partnership with Jon.

Most recently Chris has served as a budget practitioner with Jefferson County, Colorado, where he incorporated the lessons learned from BFO into the development of the ***Priority Based Budgeting*** process. He holds a B.S. in engineering from the Colorado School of Mines.

Jon and Chris have been featured speakers at numerous national and regional conferences webinars, and workshops sponsored by the ***International City/County Management Association*** (ICMA), the ***National League of Cities*** (NLC), the ***National Association of Counties*** (NACo), the ***Government Finance Officers Association*** (GFOA), and the ***Alliance for Innovation*** as well as numerous state and regional organizations such as the ***Municipal Managers Association of Southern California*** (MMASC), the ***Municipal Managers Association of Northern California*** (MMANC), the ***Virginia Local Government Managers Association*** (VLGMA) the ***Tennessee Municipal League*** (TML), the ***Colorado Government Finance Officers Association*** (CGFOA), the Oregon ***Emerging Local Government Leaders***, the ***Association far Pennsylvania Municipal Management*** (APMM), the ***Idaho City/County Management Association*** (IdCMA), the ***New Mexico City Management Association*** (NMCMA) and the ***Michigan Municipal League*** (MML). They have co-authored several articles describing their approach to ***Fiscal Health and Wellness through Priority Based Budgeting*** for local governments including:

- ***"Getting Yaur Priorities Straight"*** published by ICMA in the June 2008 issue of ***PM Magazine***
- ***"Leading the Way to Fiscal Health"*** published by Government Finance Officers Association (*GFOA*) in their December 2008 issue of the ***Government Finance Review***
- ***"It's All in the Questions: The Manager's Role in Achieving Fiscal Health"*** a two-part article appearing in the September and October 2009 issues of ***PM Magazine***
- ***"Anatomy of a Priority Based Budget Process,"*** co-authored with Shayne Kavanagh of GFOA, published in the May, 2010 issue of the ***Government Finance Review***
- ***"Anatomy of a Priority Based Budget Process,"*** a white paper on **"Priority Based Budgeting"** as a best practice, published by GFOA in March 2011, co-authored with Shayne Kavanagh

- "***Seeing Things Differently***," published by ICMA in the September 2012 issue of ***PM Magazine***

- ***"Embracing the Decade of Local Government – How to Face Challenges and Seize Opportunities"***, to be published by ICMA in the October 2013 issue of ***PM Magazine***

1.4.4 Experience and Qualifications

The ***PBB*** process was first developed by Jon Johnson and Chris Fabian for Jefferson County, Colorado, where both of them served prior to April 2009. After publishing an article in ICMA's professional journal *"Public Management" ("PM")* magazine, Jon and Chris were contacted by several organizations seeking assistance in implementing their ***Fiscal Health and Wellness through Priority Based Budgeting*** initiative. We are honored to be working with some of the most notable local governments in the country to implement and integrate our process and have learned so much because of the work we have accomplished together. Non-profit associations such as the International City/County Management Association (*ICMA*), the Alliance for Innovation, the National League of Cities ***(NLC),*** and the Government Finance Officers Association (*GFOA*) are among the most prominent organizations endorsing ***Priority Based Budgeting*** as a best practice – publishing case studies, journal articles and hosting seminars and conferences to promote the accomplishment of cities and counties implementing this work. ***CPBB*** has worked with local governments in located in twenty-six different states and two Canadian provinces. Among those local governments that have worked or are currently working (*) with Jon and Chris to introduce ***PBB*** to their organization are:

- ***ARIZONA*** - Goodyear; Chandler; Queen Creek; Lake Havasu City*
- ***CALIFORNIA*** - Salinas; Hermosa Beach; Temple City; Walnut Creek; San Jose; Monterey; Seaside; Sacramento; Fairfield; Mission Viejo; Palo Alto*
- ***CANADA*** - Edmonton, AB; Alberta Ministry of Health; Strathcona County, AB*; Humboldt, SK*; Beaumont; AB*
- ***COLORADO*** - Boulder; Wheat Ridge; Loveland; Longmont; Fort Collins; Englewood*; Milliken*; Mountain View Fire Protection District. ***FISCAL HEALTH ONLY***: Thornton; Victor; Dillon Valley Water/Sewer District; `Buena Vista; Trinidad*; Mead*
- ***FLORIDA*** - Lakeland; Delray Beach; Plantation; Pasco County; Jupiter*
- ***GEORGIA***- Roswell; Cobb County*
- ***IDAHO*** - Post Falls; Idaho Falls*
- ***ILLINOIS*** - Boone County (Fiscal Health Only)
- ***KANSAS*** - Shawnee
- ***MASSACHUSETTS*** - Bourne
- ***MICHIGAN***- Kalamazoo*; Battle Creek*
- ***MINNESOTA***- Scott County*
- ***MISSOURI*** - Branson*
- ***MONTANA*** - Billings
- ***NEBRASKA*** - Grand Island
- ***NEVADA*** - Douglas County; Henderson*
- ***NEW MEXICO*** - San Juan County; Las Lunas (Fiscal Health Only)
- ***NORTH CAROLINA***- Cary; Gaston County; Asheville*; Garner (Fiscal Health Only)
- ***OHIO*** - Cincinnati: Blue Ash
- ***OREGON*** - Springfield, Tualatin (Fiscal Health Only)

- ***PENNSYLVANIA***- Lehigh County; Duquesne (Fiscal Health Only)
- ***SOUTH CAROLINA*** - Beaufort (Fiscal Health Only)
- ***TEXAS*** - Plano; Corpus Christi (Fiscal Health Only)
- ***UTAH*** - South Jordan*
- **VIRGINIA** - Chesapeake; Christiansburg
- ***WASHINGTON***- Bainbridge Island; Kenmore
- ***WISCONSIN***- Janesville; Washington County*
- ***WYOMING***-Green River

The methodology and approach involved in the implementation of ***CPBB's*** unique and innovative approach to ***Priority Based Budgeting*** are described in this section. We will work with you during the Initial Project Management Meeting to assess the degree to which Steps 1 and 2 have been completed in order to determine what has already been accomplished on which we can build upon as we implement ***Priority Based Budgeting*** in the ***City of Joplin***.

Implementation of "Priority Based Budgeting"

Step 1) IDENTIFY RESULTS - accurate prioritization of programs, reflecting the organization's stated purpose, depends on the comprehensive identification of the Results it exits to achieve.

Results help to identify the very fundamental reasons that a local government exists – articulating all the ways it serves the needs of the community (*as opposed to a list of specific projects or initiatives that need to be considered during the next budget cycle*). They are meant to answer the questions, "***Why to we, as an organization, exist in the eyes of the community" and "What are we in business to do?***" *Results* are more overarching in nature and will "*stand the test of time*," as opposed to more short-term needs or tasks that normally have a targeted "*finish-line*." Finally, *Results* are truly unique to your community, in that they attempt to determine the role of your local government to determine "***why***" it exists and "***why***" it offers the types of unique services it does to the community.

As *Results* are identified, there is a distinction made between ***"Community-oriented Results"***, which help define why certain programs are offered directly to the community, and ***"Governance-oriented Results"***, which help define why internally focused programs are offered by various support functions such as Finance, Human Resources, and Information Technology. Through its research and work with other local governments, ***CPBB*** has found it imperative in achieving the best outcomes from its ***PBB*** process that an organization distinguish between "*Community Programs*" (i.e. programs that directly serve the community) and "*Governance Programs*" (i.e. programs that are more internal in nature and generally support the administration, elected officials and departments within the organization). In order to understand the relevance of *Governance Programs*, we need to evaluate them against different *Results* than *Community Programs*, because *Governance Programs* exist within the organization for fundamentally different reasons than do the *Community Programs*. Even though the scoring criteria might be different for each of these two types of programs, the process allows you to ultimately look at all offered programs from an overall City-wide perspective in the eventual program prioritization array.

The main deliverable for ***Step 1*** includes the identification and articulation of *Results* for both "*Community-oriented*" programs and "*Governance-oriented*" programs, which will be fully utilized as the ***Priority Based Budgeting*** process unfolds. ***CPBB*** will review the ***City's*** existing strategic documents

included its Vision, Mission and Values Statements, Strategic Plan, Strategic Council Goals and/or Community Survey Responses to determine how to leverage these efforts in identifying *Results* for the ***PBB*** process.

Specifically, CPBB will help the City of Joplin IDENTIFY RESULTS by:

- ***Determining both a "starting place" for its Results and the most appropriate way to validate those Results with its elected officials.***
- ***If determined to be the best approach, conducting a "Results Validation" exercise to confirm that the City Council believes the Results that have been identified are complete, comprehensive and clearly articulate "why" the City exists and "what" it is there to accomplish for it's residents, businesses and visitors.***
- ***If desired, providing suggestions on how the community could be engaged to validate these Results either during the initial implementation of PBB or in future years as the process continues to grow and mature.***

Step 2) CLARIFY RESULTS DEFINITIONS - precision in Priority Based Budgeting depends on the clear articulation of the cause and effect relationship between a program and a defined Result. With clearly defined "Result Maps," detailing the factors that influence the Results the organization is in business to achieve, it can seek to minimize subjectivity in the process of linking those Results to programs or services offered to the community.

CPBB will lead identified stakeholders (i.e. the City Council, City administration, department heads, key department staff members, boards and commissions members and/or other community members) through an online exercise to develop comprehensive definitions for your organization's *Results* that were identified as outlined in ***Step 1***. Participants in this virtual "*brainstorming*" exercise will contribute by expressing their views as to the variety of ways that the organization's *Results* can be achieved. From these responses, ***CPBB*** with compile and organize all of those answers into similarly themed groups that form the basis for each of the *Result* definitions. ***CPBB*** will facilitate a discussion with participants in the exercise to ensure that the themes have been appropriately identified and that there are no "*missing*" themes that need to be included. The technique is called ***Affinity Diagramming*** - a proven and powerful method that: a) gathers large and comprehensive amounts of information about all of the different ways your organization's *Results* can be defined, and b) does so in an extremely efficient manner that makes the most optimal use of the participant's time while still producing complete definitions.

Following the exercise, ***CPBB*** will produce draft "***Result Maps***" for each of your organization's stated *Results*. These "***Result Maps***" provide a simple, graphic way to organize and articulate the concepts identified in the facilitated exercise as the definitions around each *Result*. "***Result Maps***" serve as one of the key criteria for *program scoring*, which will take place in ***Step 4*** outlined below.

CPBB prides itself on its ability to train staff from the organizations it has worked with on the approach to ***Affinity Diagramming***. Staff from your organization will not only participate in the development of the organization's "***Result Maps***", but will also be trained so that they may conduct their own "***Result Mapping***" sessions when facilitating their own "brainstorming" sessions involving staff or citizens.

Specifically, CPBB will help the City of Joplin CLARIFY RESULTS DEFINITIONS by:

- *Utilizing the proven "Result-mapping" technique in facilitating an online exercise to engage staff and other stakeholders in defining ways in which each of the City's identified Results can be accomplished. The exercise uses affirmative inquiry and open-ending questioning to garner the variety of responses that help define the organization's Results. It also lends itself well to future community engagement opportunities, if desired.*
- *Facilitating an online exercise to establish the City's "Governance" Results to support the prioritization of internally focused programs (i.e. Finance, Fleet, Human Resources, Information Technology, Facilities, etc.).*
- *Summarizing the responses provided during the "Results Mapping" exercise to capture the entirety of ideas offered by the participants.*
- *Crafting Results Definitions from the responses offered and developing "Result Maps" for each of the determined Results for approval by elected officials and/or staff, leveraging any work already completed in previous strategic discussion or goal setting to further articulate the associated definitions ("sub-results") for each of the stated Results.*
- *Coaching staff on how to facilitate a process with the City Council, City administration, Department Heads, and/or other internal or external stakeholders to "weight" the relative importance of the organization's stated Results, which may be used to establish the Result weighting factors utilized in the calculation of program scores. This is another effective opportunity to potentially engage community stakeholders in the process of validating the organization's Result Definitions.*

This graphic illustrates a "Result Map" from the City of Boulder, Colorado that clearly defines their Result of achieving a "Safe Community."

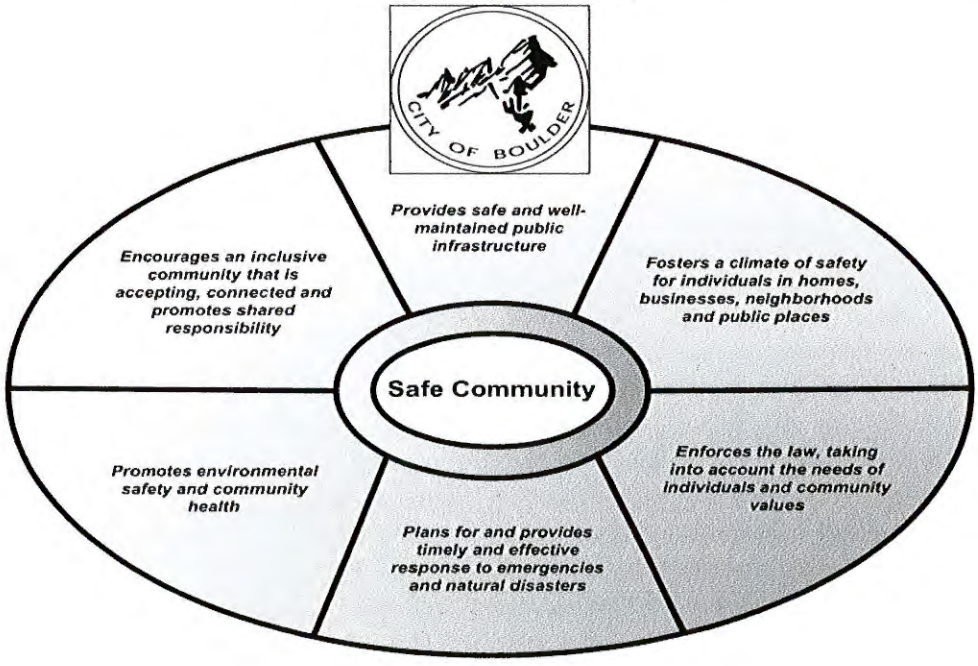

Step 3) IDENTIFY and COST ONGOING PROGRAMS and SERVICES - differentiating programs and services offered by the organization to the community, as opposed to drawing only a comparison between each of the individual departments that provide services to the community, builds a common understanding of exactly what the entire organization offers to its constituents (and what those programs cost) and leads to a more effective means of making discrete resource allocation decisions through the Priority Based Budgeting process.

One of the key objectives that the ***City of Joplin*** will achieve with this process is the identification of programs and services it offers, as well as the cost for these programs. The ***"Program Inventory"*** will clarify the breadth of services provided by your organization, and highlight key characteristics of each program *(e.g., the full cost of providing the program and level of revenues that program directly generates to support its operations).* The inventory is a tremendously valuable tool in and of itself, but is also the basis for discussion of prioritizing resources – programs are prioritized based on their influence on *Results* (which will be the focus of ***Steps 4 and 5***).

Many organizations attempt to *"prioritize"* their spending by comparing one department or division against another rather than determining which of the typically hundreds of programs and services offered across the organization are more highly valued than others. By developing a comprehensive list of programs offered by the organization and identifying the costs of those services, your organization will be able to better understand at a more discrete level what programs it provides and how much it costs to provide them.

CPBB founders wrote the guidelines for developing a ***"Program Inventory"***, as published by the Government Finance Officers' Association (GFOA) white paper on ***Priority Based Budgeting***, entitled ***"Anatomy of a Priority Based Budgeting Process"*** (GFOA, 2011). These guidelines form the basis for ***CPBB's*** work with an organization in developing a ***"Program Inventory"***. Critical to this process is finding the right level of detail when identifying discrete programs. If a program is too big or encompasses too much, it will not provide sufficient perspective and information – that is, it will be very difficult to describe the

Tool Profile: Program Costing Tool

Individual elements of the ***Priority Based Budgeting*** approach can actually be valuable, in and of themselves. Getting to a program level understanding of "*what you do,*" and a transparent and accurate understanding of "*how much it costs*" to provide those programs is a critical ingredient for understanding what options you have as an organization to change what you're currently doing. Furthermore, the only way to get to the answer of questions like "*can we provide this program more efficiently,*" or "*are we the best source to offer this service,*" or "*are we truly recovering the direct AND indirect costs for providing this service"* requires a more complete understanding of what the program ***"is"***, and how much it costs.

Besides being useful for ***Priority Based Budgeting***, you'll have a Tool that:

- allows you to evaluate established or potential fees, rates and charges on a program-by-program basis;
- allows you to compare your organization with other public or private sector providers to help evaluate the efficiency or appropriate sourcing of your programs;
- allows departments to gain a better understanding and more clearly communicate, at a program level, what they do and how much it costs;
- allows you to clearly see how your workforce is associated with programs (i.e. - what are staff spending their time doing);
- and ultimately allows you to transition your approach to budget development from "line-item budgeting" to "program budgeting" - a key breakthrough!

precise value the program creates, or to use program cost information in decision making. However, if program definitions are too small, decision makers can become overwhelmed with detail and be unable to see the big picture. ***CPBB*** will work with your organization to establish the right level of discretion in the creation of "***Program Inventories***".

CPBB will provide a webinar workshop to instruct departments in the development of program inventories and will also provide the ***City*** with an illustrative listing of program examples gathered from other organizations that have implemented the ***PBB*** process for its review and use in refinement of its own "***Program Inventory***". This will provide the ***City*** with the assurance that it has developed a complete and comprehensive listing of all activities at a level discrete enough to offer the full benefit of the ***PBB*** process. ***CPBB*** will also evaluate the submitted "***Program Inventory***" listings and provide feedback and recommendations to ensure that these listings are properly "sized", are representative of programs offered rather than tasks performed, are clearly articulated in terms of the program name assigned and are reflective of only "ongoing" programs and services as opposed to one-time initiatives or capital-related projects.

With respect to identifying costs for each of the programs identified, ***CPBB*** will provide a webinar workshop and the necessary worksheet templates in order to train staff on how to derive these program costs, as well as serve as an ongoing resource to staff in providing assistance in the estimation of these costs. ***CPBB*** will provide guidance and coaching that will offer your organization techniques and methodologies used in calculating indirect and direct ***program costs*** and identifying the number of staff associated with each program offered with ***CPBB's*** proven cost allocation tools and templates. ***CPBB*** utilizes its unique and intuitive "*Program Costing Tool*" that truly simplifies the process of developing program costs through a step-by-step approach that is a shared "*task*" between each operating department and Budget staff – where each fills in the relevant information that they are best suited to provide.



This screen capture illustrates an individualized departmental "Program Costing Tool" for the City of Wheat Ridge, Colorado's Police Department's Patrol Division

Specifically, CPBB will help the City of Joplin IDENTIFY and COST ONGOING PROGRAMS and SERVICES by:

- ***Providing a webinar workshop to help department heads and other identified staff gain a better understanding of how to define and identity the individual programs and services that are offered by each individual department and to provide guidance in distinguishing between a task (too small to be considered a program) and a department/division (oftentimes too large to be considered a program).***
- ***Sharing an illustrative listing of program examples gathered from other organizations that have worked with CPBB to use in developing and/or refining its own "Program Inventory".***
- ***Providing worksheets, feedback and coaching in support of the organization's overall efforts in developing individual department's "Program Inventory" listings.***
- ***Providing a webinar workshop to help department heads and other identified staff gain a better understanding of how to utilize CPBB's "Program Costing Tool" to determine program costs.***
- ***Developing individualized department and/or division "Program Costing Tool" templates to assist in the determination of program costs and associated FTE needed to provide the program; effectively "flipping" your line item budget to a program budget.***
- ***Providing guidance and coaching to department heads, division directors, managers and/or supervisors to train them on techniques and methodologies used in calculating program costs (including direct and indirect costs) and identifying the number of staff associated with each program offered (if desired).***

Step 4) VALUE ONGOING PROGRAMS BASED ON RESULTS - with the right Results, and with clear definitions of those Results, the organization is then ready to more accurately place a value on individual programs (and potentially one-time initiatives) relative to its influence on achieving the organization's stated Results.

In ***Program Evaluation or Scoring*** phase, it is essential to give departments the opportunity to first score their own programs, relative to your organization's *Results* and demonstrate why they believe their programs are influential in achieving those *Results*. This gives departments the chance to provide their own unique intelligence on their own programs which no one else but the program providers would have known. Not only does this help solidify organizational buy-in but at the same time provides a more thorough and complete understanding about everything the organization does and how those programs help achieve the identified *Results* (i.e. *"why" we offer the program*).

The ***Peer Review*** phase then provides for an authentication process to validate (*and perhaps question*) the department's belief that their programs are indeed relevant to your organization's *Results*. Several organizations have commented that, unlike other more conventional approaches to performance measures, ***Peer Review*** provides a forum for a far better discussion that leads to a clearer understanding of how programs truly influence *Results*. Furthermore, departments gain an organization-wide perspective about programs being offered across your organization, which has led to the uncovering of program redundancies. This step in the process has led to cross-departmental collaboration, as departments find out that they provide similar programs to other departments. This process has also contributed to changes in organizational culture as departments are tasked with the duty of objectively analyzing programs that aren't their own (i.e. *a "jury of their peers"*).

The effect of ***Peer Review*** has been remarkable, not only for the purposes of ***PBB***, but for bringing an organization together to look at the programs they offer in the context of how they collectively achieve the *Results* that citizens find meaningful. In a sense, ***Peer Review*** begins to break down the old departmental *"silos"* and lets staff see the world from a more global perspective. Ultimately, it is through this step that more accurate *program* scores emerge, that a better understanding of *programs* is developed, and an assurance that the outcome of the entire process is objective and valid. For the long-term, this phase in the process sparks the discussion of how to determine what measure or metric will substantiate the fact that a program's desired outcome is achieving that objective.

Specifically, CPBB will help the City of Joplin VALUE ONGOING PROGRAMS BASED ON RESULTS by:

- ***Facilitating with a discussion with the project team to identify "Basic Program Attributes", which help determine what additional characteristics in addition to Results would make a program a high priority.***
- ***Providing a webinar workshop for department heads, division directors, managers and/or supervisors to train them on the how to evaluate programs against the identified Results and Basic Program Attributes in the Program Scoring phase.***
- ***Creating individual departmental "Program Scorecards" that facilitate the organization's effort to score programs based on the program's influence on Results and on the identified "Basic Program Attributes".***
- ***Providing coaching and support to the departments as program scoring is completed.***
- ***Providing guidance and assistance in the development of Peer Review Teams to ensure they are cross-functional in nature and maintain the level of objectivity needed to make this phase of the process successful. This is another part of the process where including elected officials and/or external stakeholders from the community is a potential area of interest.***
- ***Providing coaching and support to the Peer Review Teams in the evaluation of program scores, encouraging them to interview program managers to hear evidence that justify assigned program scores, and then recommending program score adjustments where appropriate.***
- ***Offering suggestions as to the incorporation of existing performance measures as an evaluation criteria in the Peer Review process as well as the development of key indicators for use in future years.***
- ***Accumulating the information provided through the program scoring and peer review phases into a "Master Program Scorecard".***
- ***Developing an "Impact of Peer Review Report" to identify the impact of changes to the department's initial program scored made by the Peer Review Teams.***
- ***If desired, coaching the organization on how to utilize a similar process in evaluating significant capital projects and other one-time initiatives to determine which of these are of the highest priority in terms of accomplishing the organization's overall Results.***

***Step 5) ALLOCATE RESOURCES BASED ON PRIORITIES** –ultimately, the Results identified and defined by the organization and the programs that are the most highly valued in terms of achieving those Results become clearly articulated in the budget through a process in which resource allocation decisions are linked to the prioritization of those individual programs and services.*

Once programs have been scored against the *Results* and a relative value determined, the entire list of your organization's offered services can be arranged in order of "*highest priority*" (those programs most relevant in achieving the organization's stated *Results*) to "*lowest priority*" (those programs that are less relevant in achieving those *Results*). The programs are then grouped into four "***Quartiles***" based on the similarity of the scoring ranges, with *Quartile 1* representing those programs of the highest priority and *Quartile 4* including those programs of the lowest priority.

Individual costs are then associated with each program in order to develop a final "*Spending Array by Quartile.*" ***CPBB*** takes this information and develops a customized "***Resource Alignment Diagnostic Tool***" that can be utilized by the organization in 1) assessing its spending profile in terms of aligning resources with identified priorities; 2) developing "*target budgets*" for departments based on their individual prioritized spending profile and 3) analyzing programs using the "***Resource Alignment Diagnostic Tool's***" unique filtering capabilities.

This graphic depiction from the City of Cincinnati, Ohio of its "***Resource Alignment Diagnostic Tool***"

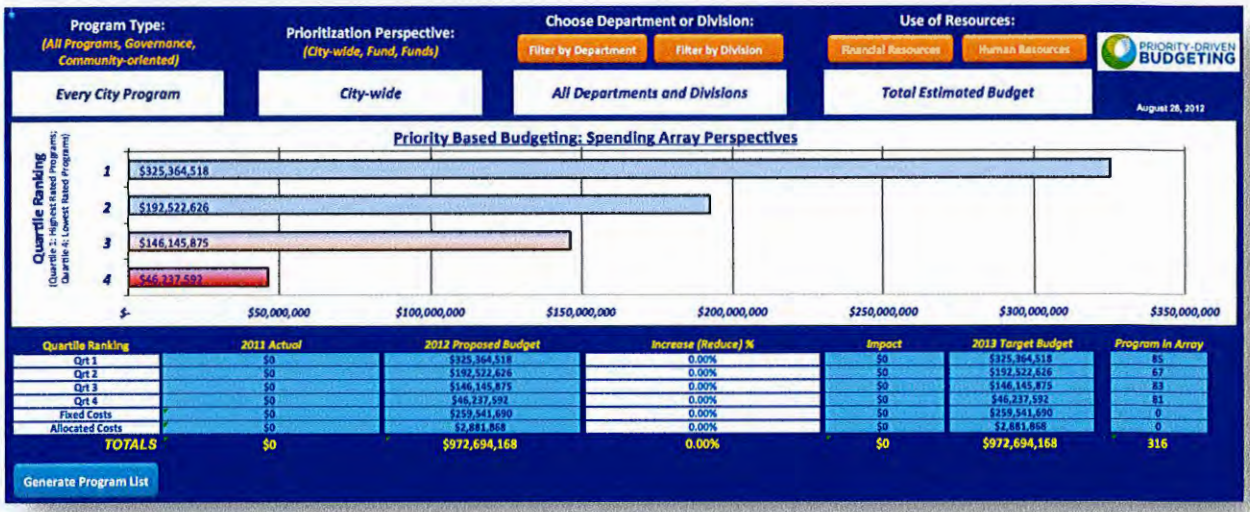

helps illustrate how the *Results* of an organization's ***Priority Based Budgeting*** work can be used to derive departmental resource allocation *"targets."*

With the "***Resource Alignment Diagnostic Tool***", your organization will have a "*unique lens*" to see your programs not only in terms of their relevance to *Results*, but also in light of mandates, fee structures, citizens' reliance and community partnerships. This *unique lens* allows staff to efficiently analyze programs and gain insights into areas such as:

- *Programs supported by specific user-fees **VS.** those funded through general government revenues (taxes)*

- *Stringently mandated services **VS.** programs without any legislative requirement*
- *Programs that the community depends exclusively upon the local government to provide **VS.** programs offered by other entities in the community (private, non-profit, etc.)*
- *Programs that are benefit the majority of the community's stakeholders **VS.** programs thot serve only a small constituency*
- *Programs that are experiencing an increase in demand fram the community **VS.** programs that are experiencing a lesser demand than before*
- *Programs that highly achieve one or more af the local government's stated Results **VS.** those programs that do not help to achieve any of those Results.*

In addition, the ***"Resource Alignment Diagnostic Tool"*** provides staff and the ***City's*** elected officials with a way to engage in more powerful and meaningful discussions that address questions such as:

- *What services are truly mandated to be provided by the local government, and how much does it cost to fulfill those mandates?*
- *What programs are most appropriate ta consider a discussion about establishing or increasing user-fees?*
- *What programs are most appropriate for discussions about partnerships with other service providers in the community?*
- *What services might the organization consider "getting out of" the business of providing altogether?*
- *Where ore there apparent duplications in services offered across the organizotion thot might lead to a meaningful efficiency discussion?*
- *How can succession planning be incorporated to focus on training staff providing lower priority programs to fill the positions left vacont in higher priority progroms?*

Specifically, CPBB will help the City of Joplin ALLOCATED RESOURCES BASED ON PRIORITIES by:

- ***Calculating final program scares and developing the quartile rankings for all the organization's programs and services based on their relative score.***
- ***Calculating and applying a "weighting factor" to each Result as determined by the responses from the "Results Weighting Exercise" (if desired).***
- ***Associating program casts and associated FTE counts with the scored pragrams to develop a final calculation of the organization's total budget by quartile ranking (the "Spending Array by Quartile" – a summation of program costs by quartile ranking).***
- ***Providing the organizatian with an interactive "Resource Alignment Diagnostic Tool" that will guide all resaurce allocation decisions based on the prioritization of programs (allowing allocations to be summarized by Fund, Department, Division etc.).***
- ***Training staff on how to use the "Resource Alignment Diagnostic Tool", providing them with the ability to more effectively analyze programs by way of the filtering capabilities of the "Tool", offering a unique perspective on the organization's programs, which leads to more powerful and meaningful discussions about how resources can be effectively utilized to achieve the desired Results for the community.***

- *Offering guidance in using the "Resource Alignment Diagnostic Tool" to identify which of the City's highly relevant programs should be evaluated in terms of effectiveness and efficiency and how to use the PBB process to continuously refine performance metrics to ensure the identified Results are being achieved.*
- *Providing a high level interpretive analysis of the data available in the "Resource Alignment Diagnostic Tool" and identifying opportunity areas for discussion related to programs and their continued relevance to the organization.*
- *Offering suggestions on how to use the "Resource Alignment Diagnostic Tool" in the calculation of departmental "target budgets" based on the availability of ongoing revenues and the individual department's prioritization profile.*
- *Recommending ways to incorporate PBB into the City's current budget development process as well as providing "Budget Transmittal Form" templates to guide departments in communicating their recommended program level budgets within the context of PBB and to demonstrate the allocation of general government resources is being focused on higher-priority programs. (if desired).*
- *Presenting the final "Resource Alignment Diagnostic Tool" to City staff and, if desired, to the City Council.*

Development of the "Fiscal Health Diagnostic Tool"

ASSESS THE CITY'S "PICTURE OF FISCAL HEALTH" **–*Fiscal Health* is achieved by properly diagnosing the symptoms and causes of an organization's budget issues, allowing them to "*prescribe*" the correct treatments that can alleviate their fiscal distress. Applying the wrong treatment will not "*cure what ails*" them and may even make matters worse. Once their organization is fiscally healthy, it can then become financially sustainable in the long term by implementing a *Fiscal Wellness* regimen that revolves around the principles of *Priority Based Budgeting***

CPBB helps lead organizations to fiscal health by uncovering the root cause of its "*ailments*," and then prescribing and applying the correct and most effective treatment options that will ensure fiscal stability. Prescribing treatments without analyzing the symptoms and causes could lead to an improper diagnosis and a worsening of the organization's fiscal "*dis-ease*." Preventative diagnosis might also uncover potentially unhealthy practices that could easily be corrected before the organization's fiscal health is compromised. Local governments choosing to implement the concepts of ***Fiscal Health*** as a treatment regimen are making substantial progress because they are doing the analytical work required to more accurately diagnosis the reasons behind their fiscal issues and then determining the best treatments that lead to a viable cure.

The following are illustrative of how ***CPBB*** helps organizations diagnose their fiscal problems, and then work to resolve them, based on achieving 5 key principles of ***Fiscal Health***, including the development of the "***Fiscal Health Diagnostic Tool***"

1) "Spending Within Our Means"- focusing on the alignment between ongoing sources and ongoing uses and on the alignment between one-time sources and one-time uses.

*Specifically, this "**Fiscal Health Diagnostic Tool**" helps communities*:

- Shift the focus of forecasting and budgeting from expenditures to revenues.
- Establish alignment between ongoing revenues and ongoing expenditures and between one-time sources and one-time uses.
- Base resource allocation strictly on available (*and reliable*) ongoing revenues and one-time sources (*as opposed to historical or forecasted expenditures*).
- Distinguish between ***general government*** revenues (*taxes, franchise fees, etc.*) ***program*** revenues (*user fees, grants, permits, etc.*); and understand the relative reliance of each funding source.
- Require that reductions in specific program revenues be offset by equal reductions in expenditures for that same program.
- Minimize reliance on volatile revenues sources to fund ongoing operations.

2) Establishing and Maintaining Reserves – focusing on fund balance reserves and the monitoring tools in place to protect those reserves.

*Specifically, this "**Fiscal Health Diagnostic Tool**" helps communities*:

- Understand the importance of establishing a written working capital/emergency reserve policy.
- Create an inventory listing of all reserves maintained across the organization and assess the adequacy and appropriateness of reserved and unreserved fund balances, eliminating any that are excessive, unnecessary or duplicated *(having "too much" may be as problematic as having "too little" if there is no plan for how the funds are to be used to benefit the community).*
- Develop appropriate monitoring mechanisms that ensure reserves are being held in full compliance with all required restrictions, reservations or designations of fund balance.

3) Understanding Variances - focusing on disparities between budget projections and actuals to look for opportunities to shift resource allocations from areas where they are not needed and more importantly improve the accuracy of revenue and expenditure forecasts by eliminating the impact of recurring historical variances.

*Specifically, this "**Fiscal Health Diagnostic Tool**" helps communities*:

- Determine specific reasons for the occurrence of variances and adjust future budgets to be more in line with actual experience.
- Identify programs or services where resources have historically been "*over-allocated*," allowing for those resources to be re-allocated to other areas of need.
- Improve the accuracy of revenue and expenditure forecasts by better isolating and identifying emerging trends as well as eliminating the impact of recurring historical variances.
- Identify where resources have been allocated on a regular basis for one-time or cyclical costs, contingencies and/or worst-case scenarios and re-allocate those ongoing resources where possible.
- Ensure that expenditures related to multi-year capital projects are budgeted in the years in which costs will be incurred to prevent large unplanned budget appropriations *("carry-forwards").*

4) Being Transparent About the "True Cost of Doing Business" – focusing on ensuring that appropriate internal service and administrative costs are shouldered by the programs that benefit from those services, ensuring that fees for services are capturing both direct and indirect costs (appropriate for cost recovery objectives) and ensuring that the full cost of offering programs and services is clearly articulated and understood.

*Specifically, this "**Fiscal Health Diagnostic Tool**" helps communities*:

- Understand the importance of allocating appropriate internal and indirect costs so that the burden is shared by the programs (*and other accounting funds*) that demand and use those services.
- Ensure that fees for services, where some level of cost recovery is expected, capture both direct and indirect costs associated with providing the service.
- Identify opportunities to establish, when appropriate, internal service funds for those departments that exist primarily to provide services to internal customers, in order to align cost and level of service with customer demand.
- Understand the importance of identifying the total cost (*including direct and indirect costs*) of providing all programs.
- Encourage the use of a formal ***Cost Allocation Plan*** or other internal cost allocation process to establish the methodology by which overhead and administrative costs can be allocated to user departments and/or to various accounting funds, potentially relieving the burden on the General Fund where these types of costs normal "*reside*."
- Develop asset replacement/maintenance plans and perform asset utilization studies.

5) Incorporating Long-term Planning into Decision Making – focusing on the inclusion of all long-term plans prepared by the organization into financial forecasts and the budget process as well as the associated incorporation of relevant external economic influences. Additionally, insuring that the organizations use clear and concise modeling tools to communicate forecasts, assess impacts of treatment solutions and identify impacts of budget decisians.

*Specifically, this "**Fiscal Health Diagnostic Tool**" helps communities*:

- Understand the impact of relevant external economic influences and incorporate them into forecasts and budget projections.
- Identify and incorporate all long-term plans prepared throughout the organization into long-term forecasts.
- Develop revenue and expenditure forecasting methodology.
- Prepare a comprehensive Capital Improvement Plan (*CIP*) that spans a period of at least five years and includes all potentially significant one-time expenditures as well as any associated ongoing operating costs.
- Assimilate all elements of fiscal health into our ***"Fiscal Health Diagnostic Tool,"*** a scenario-planning model that helps ensure decisions are made with an understanding of their impact on the organization's future financial picture while upholding the objectives of ***Fiscal Health***.
- Through the ***"Fiscal Health Diagnostic Tool,"*** developing a simple, graphic communication device that is used consistently to provide decision makers with financial information at a summarized level.

This graphic is a depiction of the "***Fiscal Health Diagnostic Tool,***" created by ***CPBB,*** to help illustrate how an organization utilize a simple model to communicate its fiscal "*condition,*" monitor its ***Fiscal Health*** and do interactive, real-time scenario planning and forecasting with decision makers.

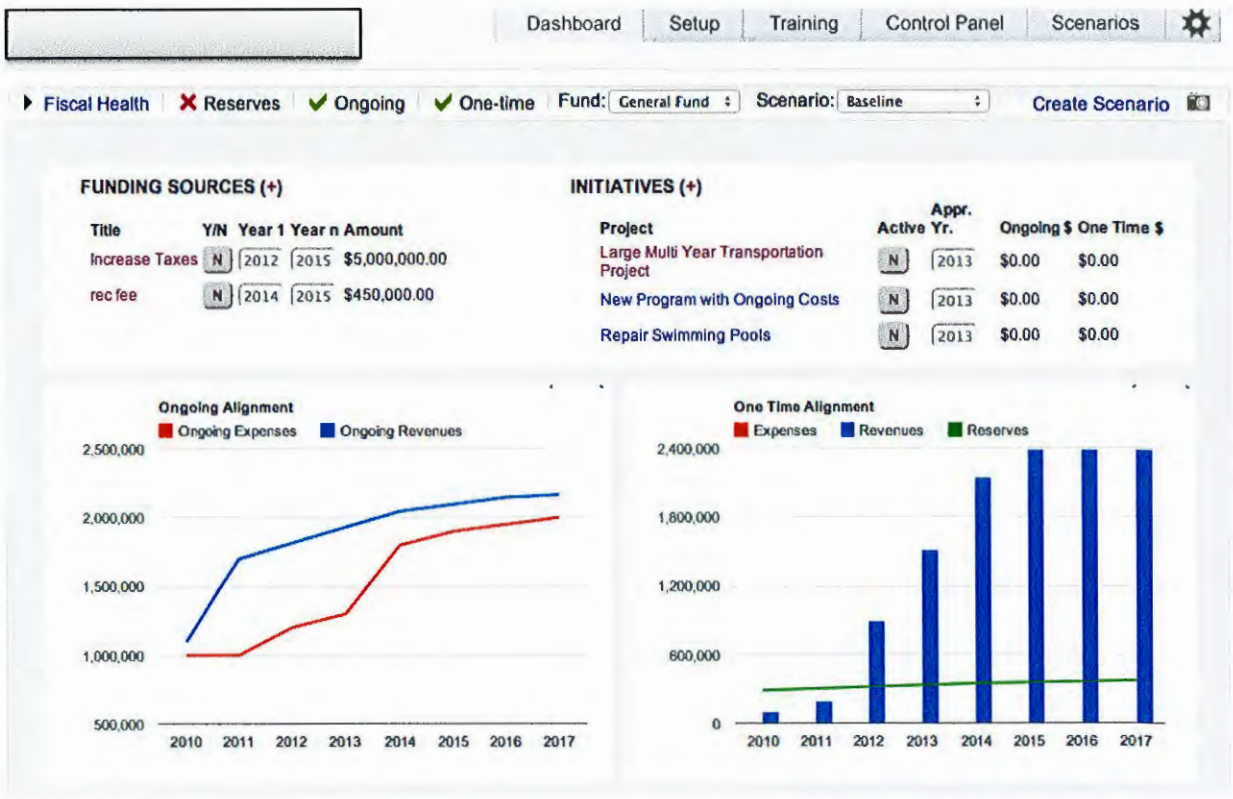

The screen capture above is from the web-based "Fiscal Health Diagnostic Tool"

The implementation process to develop the web-based "***Fiscal Health Diagnostic Tool***" is described in further detail on the pages that follow.

Initial Data Collection

Depending on the amount of financial history that the ***City of Joplin*** wants to incorporate and how easily the most accurate and complete financial records can be produced, ***CPBB*** will provide templates and advisory assistance to the ***City*** in accumulating the data required to sufficiently populate the model. Most of the data needed to develop the model should reside in the organization's financial system (i.e. historical and budgeted revenue and expenditure amounts). In addition, the ***City*** will need to gather information from its adopted reserve policies in the funds to be modeled (or minimum reserve thresholds) as well as information related to its "Capital Improvement Plan" (CIP). With regard to the data that is pertinent to future financial forecasts, ***CPBB*** will work with the organization to determine what (if any) data exists already that could aid in the development of revenue/expenditure forecast and future scenario planning.

Ongoing versus One-time Analysis

CPBB will work with the ***City*** to review both revenues and expenditures, in order to differentiate between *"**ongoing**"* and *"**one-time**"* sources and uses. ***CPBB*** will provide feedback and recommendations to the ***City*** in order to appropriately classify the sources and uses as *"**ongoing**"* or *"**one-time**"* in nature, and in some instances may propose that a portion of a particular source or use be split between a classification of *"**ongoing**"* and *"**one-time**"* - where a portion of the source or use is determined to be reliable or predictable, and another portion is more volatile or speculative.

- ***Revenue Analysis:*** For each of the funds being modeled, the total sources of revenue to the organization will be differentiated between *"**ongoing**"* sources – those that are reliable or predictable sources of income - and *"**one-time**"* sources – those that can only be *"spent"* once. Examples of *"**ongoing**"* revenue streams include the *"reliable"* component of sales tax revenues, franchise fees, utility rates and charges based on system demand, and perhaps a conservative estimate for interest income revenues associated with reserved fund balances. Examples of *"**one-time**"* sources include fund balance (*reserved or unreserved*), grants that are one-time in nature or have a certain "expiration" date, fees for a specific projects or initiative, and potentially volatile interest income.

- ***Expenditure Analysis:*** For each of the funds being modeled, total expenditures will also be differentiated between *"**ongoing**"* costs - those expenses for costs related to the ongoing operations of the organization – and those uses that are more *"**one-time*** in nature. Examples of *"**ongoing**"* costs include personnel *(salary and benefits)*, supplies, energy, regular maintenance and other daily expenditures association with the day-to-day "running" of the organization. Examples of those expenditures that are more *"**one-time**"* in nature include capital project expenditures, other projects or initiatives undertaken once or on a less than annual basis, emergency / contingency initiatives, or other non-recurring expenses.

The graphic below illustrates the process of organizing revenues and expenses into either "Ongoing" or "One-time" (or both) categories

Fund: General Fund

Income (Add Year)

	Ongoing	One Time	Total				
2009	$1,000,000	$100,000	$1,100,000	(-)	2010	$1,100,000	$0	$1,100,000	(-)
2011	$1,200,000	$0	$1,200,000	(-)	2012	$1,300,000	$0	$1,300,000	(-)
2013	$1,400,000	$0	$1,400,000	(-)	2014	$1,500,000	$0	$1,500,000	(-)
2015	$1,550,000	$0	$1,550,000	(-)	2016	$1,600,000	$0	$1,600,000	(-)
2017	$1,620,000	$0	$1,620,000	(-)	2018	$1,620,500	$0	$1,620,500	(-)

Fund Balance (Add Year)

	Ongoing	One Time	Total				
2010	$0	$100,000	$100,000	(-)	2011	$0	$200,000	$200,000	(-)
2012	$0	$900,000	$900,000	(-)	2013	$0	$1,515,000	$1,515,000	(-)
2014	$0	$2,145,450	$2,145,450	(-)	2015	$0	$2,391,814	$2,391,814	(-)
2016	$0	$2,391,814	$2,391,814	(-)	2017	$0	$2,391,814	$2,391,814	(-)
2018	$0	$2,391,814	$2,391,814	(-)	2019	$0	$4,012,314	$4,012,314	(-)

Sales Tax (Add Year)

	Ongoing	One Time	Total				
2011	$500,000	$0	$500,000	(-)	2012	$515,000	$0	$515,000	(-)
2013	$530,450	$0	$530,450	(-)	2014	$546,364	$0	$546,364	(-)
2015	$546,364	$0	$546,364	(-)	2016	$546,364	$0	$546,364	(-)

Initial Development of "Fiscal Health Diagnostic Tool"

The culmination of the analysis of "***ongoing***" and "**one-time**" sources and uses, combined with the additional data collected that relates to the ***City's*** financial policies (*for instance, the organization's reserved fund balance policies*) will provide ***CPBB*** with the requisite information to build the customized, web-based "***Fiscal Health Diagnostic Tool***". The initial "***Tool***" development will depict a perspective of the organization's current ***Fiscal Health,*** complete with the historical data for prior years. The final step of the process will generate the information required to allow the organization to develop future planning assumptions sufficient to support the use of the "***Tool***" as a "*scenario-planning*" dashboard.

Financial Forecasting

The maximum value of the ***"Fiscal Health Diagnostic Tool"*** is the ability to visually display a variety of historical, projected and "*what-if*" data, in an analytical format - a "dashboard" approach. This will provide a way for the ***City*** to assess and explore future scenarios and initiatives in an interactive and "real-time" environment. ***CPBB*** will work with the ***City*** to review future assumptions to be built into the model, as well as potential decisions that the organization wishes to model and then evaluate the impacts of those decisions.

As an example, ***CPBB*** will work with the ***City*** to determine an appropriate assumption (*or range of assumptions*) for future sales tax growth (*or decline*) and demonstrate how this assumption impacts the model. ***CPBB*** will demonstrate the "sensitivity" of the model with respect to these assumptions, and recommend to the organization where certain assumptions (like the growth or decline of sales tax revenues) should be considered a readily changeable variable, whereas other assumptions (for instance, a very small and less consequential revenue source such as donations made to the organization) are less impactful and therefore won't be included in the model's dashboard.

CPBB will also work with the **City** to develop an inventory of known future decisions, both of an "***ongoing***" and "***one-time***" nature that may impact the organization's future "*picture of* ***Fiscal Health.***" Clearly, a list of what is included in the organization's Capital Improvements Plan (*CIP*) relative to the accounting funds being modeled is an example of the types of future "decisions" that could be accepted, denied, or sequenced over various time periods, with each scenario producing a different outcome for the organization's future ***Fiscal Health***.

Final Refinement of the "Fiscal Health Diagnostic Tool"

With each of the assumptions developed, ***CPBB*** will complete the organization's "***Fiscal Health Diagnostic Tool"*** and train the appropriate staff as to how the models can be easily updated.

Fiscal Health is a concept promoted and highlighted by such associations as the GFOA, ICMA and the Alliance for Innovation. With the "***Fiscal Health Diagnostic Tool"***, the ***City of Joplin*** will have the capacity to:

- Communicate the City's "***picture of fiscal health***" to elected officials, City administration, staff, bargaining units, residents and other community stakeholders.
- Graphically depict the alignment of "***one-time***" and "***ongoing***" funding sources with the "***one-time"*** and "***ongoing***" expenditure needs of the organization.
- Effectively monitor the ***City of Joplin's Fiscal Health*** position to ensure that decisions made do not impact the level of financial health achieved.

- Access the impact of capital decisions on the ***City's*** financial position, including the evaluation of the impacts of "**ongoing**" operational costs associated with those "***one-time***" expenditures.
- Model the ***City's*** financial forecasts and document the assumptions on which they are based.
- Engage in interactive and *"real-time"* scenario planning.
- Demonstrate the impact of "*today's*" decisions on the ***City's*** five to ten year forecasts

It is anticipated that the development of the "***Fiscal Health Diagnostic Tool***" can be accomplished in a ***two to three month period***, depending on the ready availability of the data being provided to ***CPBB*** by the ***City.***

Proposed Timeline and Costs for Implementation and Future Phases

Once the proposed start date of September 2015 is confirmed, ***CPBB*** will work with the project implementation team to develop a timeline to implement the first year of ***Priority Based Budgeting*** for the ***City of Joplin***. For most implementations, it is expected that a minimum timeframe of ***five to six month*** is required. This timeframe can be expanded based on needs and conflicting workloads of the organization. This time frame may also vary depending on the level of citizen engagement that might be desired ***OR*** the amount of information that might already be in place before the work begins. Once the process is in place and ready to be utilized for the upcoming budget cycle, ***CPBB*** remains available for questions, guidance and general advisory assistance until the ***City*** completes its' budget process.

While the duration of the implementation process is anticipated to span several months, the actual workload placed on staff in the ***City*** is by no means of a "*day-to-day*" nature. The timeline allows for staff to manage their own internal workload and still participate effectively in the process. This timeline also provides for the scheduling of workshops, team meetings and the tasks performed off-site by ***CPBB*** in the development of the various templates used as well as the final ***"Resource Alignment Diagnostic Tool."*** Having experienced processes that burdened organizations with more intense time requirements and having been practitioners in a local government environment ourselves, ***CPBB*** has specifically designed this process to require staff to devote manageable amounts of time along the way as each step is completed.

CPBB's commitment as a mission-driven entity is to make this process available and affordable to any organization that wishes to receive the benefits it can provide. The necessary budget for any organization will depend on the size of the organization and the amount of work that has already been started before ***CPBB*** is engaged. Typically the budget required for the full implementation of ***Priority Based Budgeting***, exclusive of travel related expenses, is between $40,500 and $52,900. However, we pride ourselves in being flexible and reasonable as we engage in conversations with organizations about the implementation process and will work with you in negotiating costs.

Based on the scope outlined in this proposal, ***the total proposed budget for this project with the City Joplin for year one is $43,500.00*** based on the scope of services outlined above. Travel costs will be billed separately on an occurrence basis and will include airfare, lodging, ground transportation (*rental car, fuel, taxi service*); airport parking and a modest individual per diem *($60 per day)*. It is expected that there will be two site visits to the City, one at the commencement of the project to provide an overall orientation and one at the conclusion of the project to present the final "***Resource Alignment Diagnostic Tool***". ***CPBB*** agrees to work cooperatively with the ***City*** to reduce travel costs to the greatest extent possible while still meeting the requirements specified in this proposal.

The ***City*** may be asked and should be prepared to provide certain office supply items for use in onsite workshops such as paper, markers, white boards, and other needs as requested by ***CPBB***. These items are estimated to cost no more than $300.

To assist the City in the refreshment of the ***PBB*** process for a subsequent two-year period after the initial implementation, ***CPBB*** proposes an ***annual cost of $9,500.***

As the City is aware, CPBB has offered to donate the cost of developing the initial ***"Fiscal Health Diagnostic Tool"*** in response to devastating disaster on May 22, 2011. This provides for the modeling of up to three (3) individual accounting funds and access to the online tool for a period of one-year. The equivalent value of this donation is $4,000 for the initial one-year subscription. The City may choose to model additional accounting funds with the initial cost depicted below being reduced by the donated $4,000 amount. For the subsequent two-year period, ***CPBB*** proposes an ***annual subscription fee of $3,500 for the three (3) accounting funds*** donated to the City in year one. The fee structure below will outline the ongoing costs to the City if more than three (3) accounting funds are desired to be modeled.

"FISCAL HEALTH DIAGNOSTIC TOOL" *Subscription Structure*

Number of Accounting Funds	Number of Users	Total Initial Annual Subscription	Total Ongoing Annual Subscription
1	1-3	$ 3,500	$ 3,000
2-3	1-3	$ 4,000	$ 3,500
4-6	4-10	$ 5,500	$ 4,500
7-10	11-20	$ 7,500	$ 6,000
11-20	20-25	$ 9,500	$ 8,000
Over 21	Over 26	$ 11,000	$ 10,000

The quotation of fees and compensation shall remain firm for ***a period of 120 calendar days*** from the submission of this proposal.

1.4.5 References

The following examples of engagements with local government entities are meant to be illustrative of the types of advisory services offered by ***CPBB.*** While ***CPBB*** prides itself in tailoring the process to the needs of each organization, the work done with all organizations is of a similar nature. Based on the number of local governments that have introduced this process into their culture, ***CPBB*** feels they have the technical and creative skill set to work with any entity that wishes to embrace the concepts of ***Priority Based Budgeting***.

1. ***CITY OF BOULDER, COLORADO*** – *November, 2009 – June, 2010 - Implementation of Priority Based Budgeting. The City is in its 5th year of* ***PBB***

    a. *Project Managers:* ***Mr. Bob Eichem****, CFO (and current Board President of GFOA). Phone 303-441-1819. Email:* ***eichemb@bouldercolorado.gov*** *OR* ***Ms. Peggy Bunzli****, Budget Manager. Email:* ***bunzlip@bouldercolorado.gov***

    b. *Project Highlights: CPBB provided facilitation of community engagement to help the City identify and define its Results. CPBB also provided training, coaching and assistance in all phases of implementation from development of Results Definitions; identification of programs; development of program costs; completion of program evaluation (scoring); facilitation of Peer Review and ultimate development of "Resource Alignment Diagnostic Tool".*

2. ***CITY OF WHEAT RIDGE, COLORADO*** – *June, 2011 - September, 2012 - Implementation of Priority Based Budgeting and development of "Fiscal Health Diagnostic Tool". The City is in its 4th year of* ***PBB and Fiscal Health***

    a. *Project Manager:* ***Ms. Heather Geyer****, Administrative Services Director. Phone 303-235-2826,. Email:* ***hgeyer@ci.wheatridge.co.us***

    b. *Project Highlights: CPBB provided training, coaching and assistance in all phases of implementation of Priority Based Budgeting from the identification of Results, development of Results Definitions; identification of programs; development of program costs; completion of program evaluation (scoring); facilitation of Peer Review and ultimate development of "Resource Alignment Diagnostic Tool". CPBB also assisted the City in the development of its "Fiscal Health Diagnostic Tool" which was used to initiate discussions with the City Council related to a proposed tax initiative to be placed on the ballot.*

3. ***DOUGLAS COUNTY, NEVADA*** – *September, 2011 – March, 2012 - Implementation of Priority Based Budgeting. The County has completed its 3rd year of* ***PBB***

    a. *Project Managers:* ***Mr. Stephen Mokrohisky****, former County Administrator and Finance Director (currently County Administrator for Lane County, Oregon). Email:* ***steve.mokrohisky@co.lane.or.us*** OR Ms. Christine Vuletich, Assistant County Administrator and CFO. Phone: 775-782-9097. Email: **cvuletich@co.douglas.nv.us**

b. *Project Highlights: CPBB provided training, coaching and assistance in all phases of implementation of Priority Based Budgeting from the identification of Results, development of Results Definitions; identification of programs; development of program costs; completion of program evaluation (scoring); facilitation of Peer Review and ultimate development of "Resource Alignment Diagnostic Tool". CPBB also assisted with the development of an online citizen survey tool provided by Peak Democracy to reach out to the community in the validation of Results and Results Definitions. The County achieved an increased bond rating during this period with the rating agencies listed their efforts in Priority Based Budgeting and Fiscal Health Modeling as one of the contributing positive factors. They also were also recognized statewide for their accomplishments.*

4. ***CITY OF CINCINNATI, OHIO*** *– May – September, 2012 - Implementation of Priority Based Budgeting*

   a. *Project Manager:* ***Ms. Lea Eriksen****, Budget Director (now Budget Manager for the City of Long Beach, California. Phone 562-570-6533. Email:* **lea.eriksen@longbeach.gov**

   b. *Project Highlights: Robust citizen engagement to identify Results (partnered with Novak Consulting Group, Inc.). CPBB provided training, coaching and assistance in all phases of implementation from development of Results Definitions; identification of programs; development of program costs; completion of program evaluation (scoring); facilitation of Peer Review and ultimate development of "Resource Alignment Diagnostic Tool". Provided training in utilization of tool and development of "5 Policy Questions" to lead Council Discussion. Helped City evaluate resource alignment of a $967 million budget with their priority results to address a $34 million General Fund budget deficit.* According to Council: *"Priority-driven budgeting offers a common-sense, strategic alternative to conventional budgeting. It creates a fundamental change in the way resources are allocated by using a collaborative, evidence-based approach to measure services against community priorities. By bringing together community leaders and citizens to determine strategic priorities, the city can align resources with what the community values most, and create service efficiencies and innovation."*

5. ***CITY OF GOODYEAR, ARIZONA*** *– September, 2013 – February, 2014 - Implementation of Priarity Based Budgeting. The City has completed its 2nd year of* ***PBB***

   a. *Project Manager:* ***Ms. Wynette Reed****, Assistant City Manager. Phone 623-882-7058 Email:* ***wynette.reed@goodyearaz.gov***

   b. *Project Highlights: : CPBB provided training, coaching and assistance in all phases of implementation of Priority Based Budgeting from the identification of Results, development of Results Definitions; identificotion of programs; development of program costs; completion of program evoluotion (scoring); facilitation of Peer Review and ultimate development of "Resource Alignment Diagnostic Tool".*

6. ***CITY OF BRANSON, MISSOURI*** – *January, 2014 – July, 2015 - Implementation of Priority Based Budgeting.*

   a. *Project Manager:* ***Ms. Jamie Rouch****, Finance Director. Phone 417-337-8538. Email:* **jrouch@bransonmo.gov**

   b. *Project Highlights: CPBB provided training, coaching and assistance in all phases of implementation of Priority Based Budgeting from the identification of Results, development of Results Definitions; identification of programs; development of program costs; completion of program evaluation (scoring); facilitation of Peer Review and ultimate development of "Resource Alignment Diagnostic Tool". The City chose a two-year implementation in response to a request by their Boord of Alderman ta find a process that will ensure that their budget process aligned spending with their recently adopted "Cammunity Plan 2030".*

7. OTHER CONTACTS

a. ***CITY OF SALINAS, CA*** – *Mr. Ray Corpuz, City Manager at* ***ray.corpuz@ci.salinas.ca.us*** *or Mr. Matt Pressey Finance Director at* ***mattp@ci.salinas.ca.us***

b. ***CITY OF POST FALLS, IDAHO and CITY OF ENGLEWOOD, COLORADO*** – *Mr. Eric Keck, City Manager (currently serving in Englewood) at* ***ekeck@englewoodgov.org***

c. ***CITY OF SHAWNEE, KANSAS*** – *Ms. Carol Gonzales, City Manager at 913-742-6200 ar* ***cgonzales@ci.shawnee.ks.us***

d. ***CITY OF PLANO, TEXAS***– *Ms. Karen Rhodes-Whitley, Finance Director at 972-941-7472 or* ***karenr@plano.gov***

e. ***CITY OF LOVELAND, COLORADO***– *Mr. Bill Cahill, City Manager at* ***Bill.Cahill@cityofloveland.org***

f. ***CITY OF ROSWELL, GEORGIA*** – *Mr. Ryan Luckett, Budget Manager at* ***rluckett@roswellgov.com***

g. ***CITY OF BAINBRIDGE ISLAND, WASHINGTON*** – *Ms. Ellen Schroer, Finance Director ot* ***eschroer@bainbridgewa.gov***

h. ***GASTON COUNTY, NORTH CAROLINA*** – *Mr. Bryant Morehead, Finance Director at 704-886-3038 or* ***Bryant.Morehead@gastongov.com***

i. ***CITY OF TEMPLE CITY, CALIFORNIA*** – *Ms. Tracey Hause, Finonce Director at 626-285-2171 or* ***thause@templecity.us***

j. ***CITY OF KENMORE, WASHINGTON*** – *Ms. Joanne Gregory, Finance Director at* ***jgregory@kenmorewa.gov***

k. ***CITY OF FORT COLLINS, COLORADO*** – *Mr. Darin Atteberry, City Manager at 970-221-6505 ar* ***datteberry@fcgov.com***

l. ***CITY OF EDMONTON ALBERTA*** – *Mr. Todd Burge, Branch Manager, Client Financial Services at 780-423-1362 or* ***todd.burge@edmonton.ca*** *or Ms. Jodie Buksa, Director of Financial Strategies and Budgeting Planning at 780-5342 or* ***jodie.buksa@edmonton.ca***

m. ***CITY OF BILLINGS, MONTANA*** – *Ms. Tina Volek, City Administrator at 406-657-8430 or* ***VolekC@ci.billings.mt.us***

Testimonials

"Councilmen Larry Carney and Scott Dugan praised Pederson and Brown for the prioritization process. They called it a logicol ond understandable method of making some difficult decisions to come." - ***Grand Island (Nebraska) Independent Newspaper***

Using ROI for City Budgeting: Business Planning Meets Government Spending - the city of Boulder is going about this full spectrum analysis of the highest ROI where "return on investment" is the return of City programs on the results our citizens expect in the community.

- ***"Boulder Tomarrow" – Colorado Business Association on Priority Based Budgeting process***

Budget process requires clear priorities, vision - *By examining each of the 365 programs that are directed out of City Hall, the administration, mayor and city council are looking under every rock for ways to save taxpayer dollars and keep core services intact. It is a responsible and rotional woys to contral expense growth on progroms that may be well intended, but do not significantly support the community in the four core oreas.*

- Grand Island (Nebraska) Independent Newspaper

"I read with both pleasure ond envy the recent article on the city's (Grand Island) new Program Prioritization process. Pleosure because a discerning approach like this is the type of focused decision-moking model that successful businesses use. I am glad to see its use in our city's governonce. I am envious because it is the type of approach the Unicameral is moving toward with our recently initioted planning committee process. In this instance, the city of Grand Island is well ahead of the state of Nebrosko."

- Nebraska State Senator Mike Gloor on the Priority Based Budgeting Process

Walnut Creek, California, which must close a $20m (€14m, £12.5m) deficit for the 2010 financial year, is polling citizens on what services they value most, so it can make targeted cuts. Lorie Tinfow, assistant city manager, also expects the expansion of volunteer programs such as checking on the elderly at home. *"We are rethinking what services the city provides, whot we are paying for them and what we are expecting as American taxpoyers to get for that dollar,"* Ms. Tinfow said. - ***Financial Times, quoting Lorie Tinfow, City of Walnut Creek, California***

The City of Monterey is launching a public review of its budget priorities this fall and your participation is vital to the success of the Priority-based Budgeting project. In good times, the City allocated its resources to a wide range of programs and services. Now, the City needs to adjust to "the new normal" of reduced revenues. In Monterey, revenue from hotel, sales and property taxes have fallen to levels not seen in years. Significant recovery is unlikely for the next several years. So, the City needs to tighten its belt just like other municipalities, businesses and citizens have done.

- ***Press Release -City of Monterey, California***

"The process is called Priority-based Budgeting and it recasts the budget into programs instead of line items."

- ***Monterey County (California) Herald Newspaper***

The city of Boulder is looking to change the way it manages its annual budget. Under the new model, the programs that best help the city achieve the community's goals of having a safe, economically sustainable and socially vibrant place to live will receive top priority for funding. *Those programs that are duplicated, waste money or don't meet the community's goals could be cut.*

- ***Boulder (Colorado) Daily Camera Newspaper***

"Although Boulder is in a better financial condition than many of its peer cities, the economic outlook continues to be uncertain," said City Manager Jane Brautigam. "In response, we're taking a prudent and strategic approach to the 2011 recommended budget by focusing on achieving greater efficiencies in how services are delivered to the Boulder community. In many cases we have been able to reallocate staff and funding to those areas most likely to achieve community goals, and are reducing duplication of services to hold the line on spending at 2010 levels."

- ***Boulder (Colorado) Daily Camera Newspaper***

The new list divides the city's 443 programs into four categories, ranking them from highest to lowest priority, based on whether they help meet the community's general goals of cultivating a safe, economically sustainable and socially thriving community.

- ***Boulder (Colorado) Daily Camera Newspaper***

With budgets getting tighter across the country, more cities are turning to Prioritization. "*I just feel like we need to begin to put proactive steps in place so we can prepare the organization for what is ahead,*" said William Harrell, City Manager. *"Sure, we can just start eliminating things. But then is that what the citizens are saying? Is that what council is saying to us? This is a more disciplined and analytical approach."*

- ***(Chesapeake) Virginia Pilot Newspaper***

"It sounds intuitive but what we found was there was no real methodology to connect all of the things that government does" to what policymakers want to see for their cities."

- ***(Chesapeake) Virginia Pilot Newspaper***

Recent information from **Moody's** (the nation's largest bond rating agency) confirms that prioritization processes such as what Blue Ash is going through demonstrate a strategic approach to managing the current fiscal environment. So where do we go from here? The local government advisors developed a unique tool that Blue Ash can utilize for years to come as a part of the city's annual budgetary planning process. This tool will be valuable in assisting the council and administration in determining what services and programs contribute directly to the city's overall objectives, including the evaluation of any future new programs or services being considered.

- ***Press Release - City of Blue Ash, Ohio***

Even cities with a relatively well-off population are facing difficult choices due to falling revenues. In the eastern San Francisco bay area city of Walnut Creek, as in many other cities around the state, local officials faced the unpleasant task of cutting programs in 2009 due to budget shortfalls, and the more unpleasant task of explaining this to the public. Building on an ongoing tradition of collaboration with residents and community building programs, city staff and officials worked with consultants and

adopted a multi-stage public engagement ***Fiscal Health and Wellness*** prioritization process to educate and gather informed input from hundreds of residents.

- ***Institute for Local Government on Priority Based Budgeting process***

"PBB is attractive to the City because it relies on community input and the work of employees to be successful. In contrast to past years, decisions on potential funding reductions are expected to occur at the program level rather than at the level of individual budget line items that run across multiple programs. The results of this process are anticipated to enable decision makers to reallocate funding between programs based upon changing needs and priorities."

- ***Internal Memo - City of Fairfield, California***

San Jose Outcomes of Prioritization Approach:

- Increased connection of budget to City's Priority Results
- Stakeholder engagement in program priorities
- Rationale for reducing or eliminating programs that have the least impact on achieving the City's Priority Results

- ***City Manager's Budget Message, City of San Jose, California***

The Program Prioritization effort will inform the development of the City's 2010-2011 Proposed Budget and serve as a tool to identify potential service reductions and eliminations. The evaluation of programs as part of this process may also identify potential duplication of efforts or opportunities to consolidate similar programs and/or services that can deliver through partnership with other governmental agencies, non-profit agencies, or the private sector.

It is important to note that a high rating of a program will not guarantee that a program will be retained; nor does it guarantee that a lower-ranking program will be proposed for elimination. Also, the rankings do not reflect whether a program is being delivered in the most efficient manner. The prioritization process will provide valuable information for budget proposal development and City Council deliberation. It will not be the "only answer" to how best to rectify the City's budget shortfall.

- ***City Manager's Budget Message, City of San Jose, California***

1.4.6 Pending Claims

The ***Center for Priority Based Budgeting*** hereby declares and certifies that our organization is not currently subject to and has no expectation of current or future litigation or legal proceedings of any kind. There are no past or anticipated claims pending for work provided by ***CPBB*** and we are confident that there are no past, present or future legal obstacles that would impact the successfully delivery of services to the ***City of Joplin***.

CITY OF JOPLIN, MISSOURI
FORMAL BID TABULATION FORM

ITEMS VALUED OVER $15,000

BID #: 2015-RFP-08

BID ITEM DESCRIPTION: Priority Based Budgeting Services

BID OPENING DEADLINE: June 1, 2015 @ 10:00 a.m.

DEPARTMENT: City Manager's Office

REQUISITION NUMBER:_____

DATE & TIME OPENED: June 1, 2015 @ 1:00 p.m

OPENED BY: Sam Anselm, City Manager

WITNESSED BY: Brian Kelly, Asst. to CM

VENDOR NAME	DATE RECEIVED	CONTACT NAME	PHONE NUMBER	VENDOR DEBARRED OR SUSPENDED-Y OR N	BID AMOUNT
The PFM Group	5/29/2015	Dean Kaplan	215-557-1249	N	NTE $198,885.00
Priority Based Budgeting Ctr.	5/28/2015	Jon Johnson	720-361-3710	N	NTE $62,500.00
Grant Thornton LLP	N/A	Jack Reagan	703-637-2730	N	No Bid

****ATTACH ALL FORMAL BID DOCUMENTS FROM VENDORS****

1.

Priority Based Budgeting Services
RFP Evaluation - Scoring Summary

Evaluator #1

Respondent	Methodology	Experience	References	Cost	Staff	**TOTAL**	Rank
PFM Group	20	22	15	10	5	**72**	#2
PBB Center	28	25	15	20	4	**92**	#1

Evaluator #2

Respondent	Methodology	Experience	References	Cost	Staff	**TOTAL**	Rank
PFM Group	20	20	15	16	5	**76**	#2
PBB Center	30	23	15	24	4	**96**	#1

Evaluator #3

Respondent	Methodology	Experience	References	Cost	Staff	**TOTAL**	Rank
PFM Group	15	25	15	5	5	**65**	#2
PBB Center	27	25	15	23	5	**95**	#1

Evaluator #4

Respondent	Methodology	Experience	References	Cost	Staff	**TOTAL**	Rank
PFM Group	15	5	10	15	5	**50**	#2
PBB Center	30	25	15	25	5	**100**	#1

Respondent	Average Score
PFM Group	65.75
PBB Center	95.75

HERITAGE *strategies*

July 31, 2015

Ms. Taylor Cunningham, Planner
City of Joplin
Planning, Development and Neighborhood Services
602 South Main Street
Joplin, MO 64801

Re: City of Joplin Preservation Plan
PROFESSIONAL SERVICE AGREEMENT

Dear Ms. Taylor:

Heritage Strategies, LLC is pleased to submit this proposal to prepare a Preservation Plan for the City of Joplin. The City of Joplin Preservation Plan will take a broad-based approach to the role of historic preservation in Joplin's planning, economic development, and resource conservation strategies. It will coordinate closely with the city's comprehensive planning and related plans and processes, and will recognize the central role of historic character to Joplin's identity and quality of life.

SCOPE OF WORK

In order to assist the City of Joplin with the preparation of a Preservation Plan, Heritage Strategies proposes the following Scope of Work. This scope of work is based upon the Request for Proposals issued by the city and Heritage Strategies' experience in preservation planning for historic communities. We look forward to discussing the scope with the Planning staff and members of the Historic Preservation Commission and refining it as desired.

1.0 PROJECT INITIATION

Task 1.1 – Initial Meeting, Steering Committee Meeting #1

An initial meeting will be held with Heritage Strategies, Joplin's Planning, Development, and Neighborhood Services staff (Planning staff), representatives of the Historic Preservation Commission, and any others identified to serve on a Steering Committee to oversee the development of the preservation plan. Planning staff will be responsible for assembling the Steering Committee prior to the initial meeting.

The purpose of the meeting will be to 1) present an overview of the planning approach and process; 2) conduct an initial discussion of issues, goals, and objectives; and 3) review administrative requirements for the project, including finalizing the scope of work, meeting schedule, anticipated deliverables, roles and responsibilities, and lines of communication. Planning staff and Steering Committee members may guide the planning team on a tour of the city to review neighborhoods, resources, and development issues. Heritage Strategies will consult with State Historic Preservation Office staff to review the project and planning approach.

Task 1.2 – Field Survey

During the initial visit, Heritage Strategies will begin an in-depth field survey of the city to become familiar with communities, resources, landscapes, development trends, and growth management issues. Heritage Strategies will review the location, context, and condition of the city's identified heritage resources. In addition, Heritage Strategies will seek to identify other types of non-designated heritage resources, landscapes, and community characteristics that should be considered in the preservation plan. Digital photographs will be taken during field survey work to document existing conditions and identified heritage resources. Additional field survey work will be undertaken throughout the planning process as appropriate.

Task 1.3 – Background Information

Relevant background information will be provided to the project team by the Planning staff. We ask that as much background information as possible be provided before the initial visit; with more provided during the visit and during the course of the project as appropriate. Suggested background information includes, but may not be limited to:

- Histories and historical information on the city;
- Cultural resource inventories and nominations;
- Historic maps and aerial photographs;
- Archeological reports;
- Historic photographs and images;
- GIS mapping of the city, including, if feasible, mapping that indicates general ages of structures throughout the city, identified neighborhoods and historic districts, and historic resource inventories integrated into GIS data;
- 2012 Comprehensive Plan;
- Zoning and land development ordinances;
- Downtown and neighborhood master plans and revitalization plans;
- Natural resource inventories;
- Fiscal year budget(s);
- Visitor information and interpretive materials;
- List of organizations and individuals with preservation interests;
- Other relevant city initiatives; and
- Any other document determined to be relevant to this planning process.

Task 1.4 – Review of Existing Materials

Heritage Strategies will review existing background materials provided by the Planning staff. Pertinent information will be considered and incorporated throughout the planning process. Some documents, such as the existing zoning ordinances and development plans, will be reviewed to determine if updates may be recommended in relation to preservation planning goals; these will be identified in the recommendation phase of the project.

Task 1.5 – Public Workshop #1, The Planning Process and Community Goals and Interests

Heritage Strategies will facilitate a public workshop that will serve as a public introduction to the Preservation Plan project and a public education session. Planning staff should participate in the presentation and discussion. Attendance and participation at the public workshop by a diverse group of city residents will be encouraged and is integral to a successful planning process. The workshop will be scheduled in consultation with the Planning staff and Steering Committee with the goal of having strong attendance. Planning staff will be responsible for organizing the workshop including publicizing the meeting to the community.

Heritage Strategies will give a brief presentation on historic preservation, the planning process, and preservation philosophy. The role of federal, state, and local preservation programs and the Secretary of the Interior's Standards will be reviewed.

As part of the interactive public workshop, Heritage Strategies will engage attendees in an open forum to discuss what they perceive to be the goals and issues associated with historic preservation in Joplin. Feedback from attendees will be welcomed and documented for further consideration by the Steering Committee and the project team.

Deliverables: Meeting agenda and record of discussion for Steering Committee Meeting #1
Presentation outlining the planning process, preservation philosophy and approach
Record of public comments during facilitated discussion in Public Workshop #1

2.0 HISTORICAL OVERVIEW

Task 2.1 – Historical Overview

Utilizing documentation provided by the Planning staff, Heritage Strategies will prepare an overview of Joplin's historical development. This is not intended to be a complete history of the city, but a summary of its contextual development and physical evolution over time. The historic contexts of the city's early landscape and development will be identified and tied to larger regional and national trends. The historical overview will provide an important basis for understanding existing conditions and developing recommendations that support an understanding and appreciation of the city's roots and origins.

Task 2.2 – Overview of Planning and Development

As part of the general historical overview, Heritage Strategies will prepare an overview of planning and growth management in Joplin, including trends in the revitalization and adaptive reuse of historic buildings. This overview will help provide a background for understanding how historic preservation has fit into the planning process over time and the development and regulatory climate for preservation initiatives. Heritage Strategies will rely on documentation and insights provided by Planning staff to develop an accurate timeline of events.

Deliverables: Historical overview and overview of planning and development

3.0 VISION, GOALS, ISSUES, AND OBJECTIVES

Task 3.1 – Existing Conditions Analysis

Following its initial field survey discussed in Task 1.2 above, Heritage Strategies will assess the city's existing land uses and the contexts in which historic buildings, landscapes, and other heritage resources are located. Heritage Strategies' existing conditions analysis will focus on understanding Joplin's historic landscape and its visual characteristics and significance. The analysis will outline the impacts of development upon those resources and identify issues and processes that both support and impede preservation goals and opportunities. Additional field work will be undertaken during subsequent visits as appropriate.

Heritage Strategies will look at the broad range of planning issues facing Joplin as defined through its comprehensive plan, including zoning, land development, traffic, design standards, environment and natural resources, open space and recreation, and others, to seek a holistic approach to preservation that helps incorporate historic buildings and landscape features into the evolving fabric of the community in a positive way.

Task 3.2 – Outline of Issues and Opportunities

Based upon the existing conditions analysis and other work completed to date, Heritage Strategies will prepare a preliminary outline of issues and opportunities with respect to the city's heritage resources, historic landscapes, and community character. This outline will provide the basis for initial discussions on vision, goals, alternatives, and recommendations.

Task 3.3 – Draft Vision and Goals Statement

Based upon the analysis of existing conditions and the results of Public Workshop #1, Heritage Strategies will prepare a draft vision and goals statement for the Preservation Plan for review by and discussion with Planning staff and the Steering Committee.

Task 3.4 – Focus Group Sessions

During Heritage Strategies' second visit, the planning team will facilitate up to three (3) focus group sessions to obtain additional input from special interest groups and organizations within the greater community. Specific focus group topics will be determined in discussion with Planning staff and the Steering Committee and may include public officials, community businesses, neighborhood groups, local preservation interests, visitor bureau and interpretive sites, owners of historic buildings, or area developers.

Focus group sessions are generally 1½ hour discussions that focus on identifying areas of concern, major issues, and goals for the planning process and for historic preservation in the city. Discussions will use the preliminary outline of issues and opportunities as a point of departure. Input received through the focus group sessions will be considered by the team as the planning process moves forward.

Task 3.5 – Steering Committee Meeting #2

Heritage Strategies will facilitate a second Steering Committee meeting to review and discuss work completed to date, including the review of existing resources, public workshop, historical overview, and focus group sessions. This meeting will occur during the same trip as the focus group sessions. A presentation of Heritage Strategies' initial findings will be made to the Steering Committee who will provide feedback and guidance to the project team. The primary purpose of the meeting will be to review a potential vision and goals for historic preservation within the city. Heritage Strategies will facilitate discussion on a vision and goals based upon the project's findings to date.

It is suggested that Heritage Strategies meet informally with the City Manager, interested members of City Council, and/or other city leaders as appropriate during this visit to discuss the city's interests, goals, and objectives from their perspective and to coordinate the Preservation Plan with other city initiatives.

Deliverables: Outline of issues and opportunities
Draft vision and goals statement
Focus group meeting agendas and record of discussion for up to three (3) groups
Steering Committee meeting agenda and record of discussion

4.0 PRESERVATION PLAN STRATEGIES AND RECOMMENDATIONS

Task 4.1 – Preservation Context

Understanding the framework of preservation-related regulations, guidelines, policies, and procedures at all levels of government is important when undertaking preservation planning at the local and regional level so that their potential opportunities, impacts, and restrictions can be coordinated into a unified preservation approach. Heritage Strategies will identify the larger preservation context, particularly related to state and federal policies. The preservation context

will include an outline of federal legislation and programs, state programs, regional preservation efforts, and local preservation programs; Heritage Strategies will discuss how each of these may impact or benefit the city.

Task 4.2 – Preservation Approach

Heritage Strategies will outline a preservation approach and strategies for Joplin that is tailored to the accepted goals, development issues, and community values. The preservation approach will synthesize the information obtained during the existing conditions analysis and identification of issues into a holistic approach to preservation. The preservation approach will be based upon the *Secretary of the Interior's Standards for the Treatment of Historic Properties*. Community preservation policies will be stated, and overall preservation strategies outlined. The preservation approach will assist the city in achieving the appropriate balance of embracing new development and change and preserving significant elements of the city's heritage.

Task 4.3 – Preservation Plan Strategies and Recommendations

Based upon the preservation approach noted above, Heritage Strategies will prepare specific preservation-related strategies and recommendations for Joplin that will focus on a wide range of planning topics. Options and alternatives for the future of preservation and planning in the city will be developed in outline form, with specific attention given to:

- Recognition of the city's historical significance;
- Survey and documentation of building and landscape resources;
- Goals and strategies of the city's comprehensive plan;
- Preservation of resources and resource management;
- Community revitalization strategies;
- Incentives for preservation;
- Issues related to neglect and the demolition of historic buildings;
- Zoning and land development ordinances;
- Land development review processes and procedures;
- Identification of suggested local historic districts;
- Preservation of neighborhood and community character;
- Potential for building rehabilitation and adaptive reuse;
- Possible design review for designated historic buildings and districts;
- Interpretation and education;
- Heritage tourism potential;
- Proposed public investment and infrastructure.

Task 4.4 – Steering Committee Meeting #3

Heritage Strategies will meet with the Steering Committee in a work session to review the preservation approach and draft recommendations for the preservation plan. The purpose of the meeting will be to review and refine the recommendations in accordance with community values and interests. Input and feedback from the committee members will be integrated, as appropriate, into the draft preservation plan. Implementation and priorities will be reviewed. Upon receiving input and informal consensus on the general, overall recommendations from the Steering Committee, Heritage Strategies will prepare the draft plan under Task 5.0 below. Heritage Strategies will consult with State Historic Preservation Office staff to review the preservation approach and draft recommendations and would be pleased to meet informally with city leaders during this visit to review recommendations as well.

Task 4.5 – Public Workshop #2, Review of Strategies and Recommendations

Heritage Strategies will facilitate a public workshop to discuss the preservation approach and draft recommendations for the Preservation Plan as approved by the Steering Committee to receive public input. A PowerPoint presentation will be developed to present recommendations to workshop attendees. The presentation will be followed by an open, interactive forum for residents to ask questions and provide comments to the planning team, staff, and Steering Committee. The Planning staff will be responsible for the logistics, organization, and publicizing of the meeting.

Deliverables: Draft preservation context and approach
Outline of Preservation Plan recommendations
Steering Committee meeting agenda and record of discussion
PowerPoint presentation for the public workshop
Record of public comments during facilitated discussion in Public Workshop #2

5.0 DRAFT PRESERVATION PLAN

Task 5.1 – Draft Preservation Plan (2nd Draft)

Following the review and approval of recommendations, a draft Preservation Plan will be prepared by Heritage Strategies. A digital copy of the draft Preservation Plan will be provided to the Planning staff, Steering Committee, and State Historic Preservation Office for review and comment. Chapters may be submitted on a rolling basis. Comments and requests for changes and modifications to the plan will be consolidated into a single document by the Planning staff and provided to Heritage Strategies, who will make requested changes to the draft plan. The initial draft will be submitted in text form; photographs and maps will be incorporated into the chapters after organization and revisions have been completed.

Pending further discussions with the Planning staff and Steering Committee, it is anticipated that the draft Preservation Plan will include the following components:

1. **INTRODUCTION AND EXECUTIVE SUMMARY**
   Including project background, purpose of the plan, overview of planning process, summary of the preservation context, vision and goals, and summary of the plan's chapters and recommendations.
2. **HISTORIC JOPLIN – HISTORICAL OVERVIEW AND EXISTING CONDITIONS**
   Including an overview of Joplin's historical development, historic contexts, heritage resources, planning background, and existing historic preservation program.
3. **PLANNING CONTEXT**
   Review of federal, state, and local preservation programs and how they are interrelated and interdependent, based upon grassroots initiative.
4. **PRESERVATION APPROACH**
   The Preservation Plan's concept, approach, vision statement, and goals for historic preservation in Joplin and their relationship to preservation principles and *The Secretary of the Interior's Standards*.
5. **STRENGTHENING JOPLIN'S PRESERVATION PROGRAM**
   Context, issues, and recommendations for strengthening Joplin's historic preservation program reviewing the identification and surveying of heritage resources, designation of heritage resources, creation and management of local historic districts, treatment of historic properties, engagement with residents, community education and outreach, advocacy, and networking.
6. **COORDINATING WITH CITY PROGRAMS AND PROCESSES**

Incorporation of historic preservation perspectives and processes into initiatives and programs city-wide including planning, economic development, downtown investment, neighborhood revitalization, housing, code enforcement, public works, and others as appropriate.

7. **INTERPRETATION, EDUCATION, AND HERITAGE TOURISM**
   Use of interpretation and heritage tourism to support economic development, community revitalization and enhancement, and quality of life and as a means of community outreach and education.

8. **APPENDIX**
   Supporting materials such as the city's preservation ordinance, inventories of heritage resources, review of common architectural styles in Joplin, glossary of terms and acronyms, and references.

Task 5.2 – Steering Committee Meeting #4

Heritage Strategies will meet with the Planning staff and Steering Committee to review the draft preservation plan. Following the meeting, Heritage Strategies will incorporate final comments approved by the Planning staff and Steering Committee into the final Preservation Plan document. A copy of the plan will be submitted to the State Historic Preservation Office for review and approval.

Task 5.3 – Public Meeting #3, Review of the Draft Preservation Plan

Heritage Strategies will facilitate a joint meeting of the Planning staff, Steering Committee, planning and zoning officials, city leaders, and the general public to present the draft Preservation Plan. A PowerPoint presentation will be developed to present the plan at the meeting. The presentation will be followed by a discussion with planning participants, officials, and the public. The Planning staff will be responsible for the logistics, organization, and publicizing of the meeting. A copy of the draft plan will also be placed on the city's website for public access and review.

Deliverables: Draft Preservation Plan
PowerPoint presentation for the public meeting

6.0 FINAL PRESERVATION PLAN

Task 6.1 – Final Preservation Plan

Heritage Strategies will make final revisions requested by Planning staff, Steering Committee, and City and will prepare a digital PDF copy of the final Preservation Plan for distribution and publication. Planning staff will coordinate submission of the final plan for formal approval by the Historic Preservation Commission, Planning and Zoning Commission, and City Council as appropriate.

Deliverable: Final Preservation Plan

PRELIMINARY SCHEDULE

Heritage Strategies has prepared the preliminary schedule below for preparation of the City of Joplin Preservation Plan in accordance with the timeline outlined in the Request for Proposals. The team is flexible with regard to scheduling and will consult with Planning staff and the Steering Committee during Task 1.0 in detailing and refining the schedule in accordance with the city's planning needs and processes, including grant requirements. It is anticipated that the schedule may be further adapted to the calendar and project interests as appropriate with Planning staff guidance and approval as the preservation planning work proceeds.

Task 1.0 – Project Initiation August 2015

Task 2.0 – Historical Overview	October 2015
Task 3.0 – Vision, Goals, Issues, and Objectives	October 2015
Task 4.0 – Preservation Plan Strategies and Recommendations (1st Draft)	October 2015 – January 2016
Task 5.0 – Draft Heritage Resources Plan (2nd Draft)	April 2015
Task 6.0 – Final Heritage Resources Plan	July 2016

COMPENSATION

Heritage Strategies proposes to undertake the preservation planning services outlined in the above Scope of Work for the lump sum fee of Fifty Thousand Dollars ($50,000) including the cost of reimbursable expenses. The budget spreadsheet presented below outlines the personnel and hours associated with the tasks presented in the Scope of Work.

	Peter Benton	A. Elizabeth Watson	Fee per Task
Task 1.0 - Project Initiation			$7,040
Initial Meeting #1	8	8	$1,280
Field Survey	16	16	$2,560
Background Information and Review	16	16	$2,560
Public Workshop #1	4	4	$640
Task 2.0 - Historical Overview			$4,800
Historical Overview	24	6	$2,400
Overview of Planning and Development	6	24	$2,400
Task 3-0 - Vision, Goals, Issues, and Objectives			$9,920
Existing Conditions Analysis	8	20	$2,240
Outline of Issues and Opportunities	20	12	$2,560
Draft Vision and Goals Statement	16	8	$1,920
Focus Group Sessions	12	12	$1,920
Steering Committee Meeting #2	8	8	$1,280
Task 4.0 - Preservation Plan Strategies and Recommendations			$10,880
Preservation Context	0	16	$1,280
Preservation Approach	16	8	$1,920
Strategies & Recommendations (1st Draft)	32	24	$4,480
Steering Committee Meeting #3	16	16	$2,560
Public Workshop #2	4	4	$640
Task 5.0 - Draft Preservation Plan			$13,600
Draft Preservation Plan (2nd Draft)	64	74	$11,040
Steering Committee Meeting #4	12	12	$1,920
Public Meeting #3	4	4	$640
Task 6.0 - Final Preservation Plan			$3,760
Final Preservation Plan	15	32	$3,760
Subtotal of hours per person	301	324	
Rate per hour	$80.00	$80.00	
TOTAL FEE			**$50,000**

This Proposal is governed by the attached General Terms and Conditions, which are incorporated into this Proposal by reference and made a part hereof. If you are in agreement with the Scope of Services and Terms and Conditions of this Proposal as presented herein, please sign and date both copies where indicated and return one copy to our Birchrunville, Pennsylvania office. This Proposal, together with the General Terms and Conditions, will constitute our Professional Services Agreement. We are prepared to commence work on the project immediately upon execution of this proposal.

We sincerely appreciate your selection of Heritage Strategies to assist you with the preparation of the Preservation Plan for the City of Joplin. We are excited by the opportunity to work with you.

Sincerely yours,

HERITAGE STRATEGIES, LLC

Peter C. Benton
Principal

CITY OF JOPLIN

Signature_____

Name/Title_____

Date_____

Enclosure: General Terms and Conditions

HERITAGE STRATEGIES, LLC
PROFESSIONAL SERVICES AGREEMENT
GENERAL TERMS AND CONDITIONS

---

1. Proposal Dated: July 31, 2015

   Project: City of Joplin Preservation Plan

   To: City of Joplin, Missouri
   (hereinafter Client)

2. This Proposal is valid for thirty (30) calendar days from the date written above. When fully executed by both Client and Heritage Strategies, LLC (hereinafter Heritage Strategies), this Proposal, including these General Terms and Conditions, shall constitute an Agreement for Professional Services between Client and Heritage Strategies. In the event of a conflict between these General Terms and Conditions and the Proposal, the Proposal shall govern.

3. The Project Scope of Services and Heritage Strategies' services shall consist only of that described in this Agreement and includes all and only such work as Heritage Strategies deems necessary to carry out the Project Scope. If Client requests Additional Services, such additional work and the method and amount of additional compensation shall be agreed to in writing prior to undertaking additional work. If, after provisional or final acceptance of any Heritage Strategies work products by Client, any change is required or requested, such change(s) shall be deemed Additional Services.

4. Client shall provide full information regarding Project requirements. Heritage Strategies shall be entitled to rely upon the accuracy and completeness of any services and/or information furnished by Client and/or other consultants retained directly by Client. Client shall furnish required information and services and shall render approvals and decisions as expeditiously as necessary for the orderly progress of the Project without interruption.

5. Notwithstanding any provision in this Agreement to the contrary, nothing herein shall be construed as (a) constituting a guarantee or warranty, either expressed or implied; (b) obligating Heritage Strategies to exercise professional skills, judgment, or standards of care greater than could be reasonably expected from other professionals under like circumstances; or (c) an assumption by Heritage Strategies of liability beyond that which is explicit in this Agreement or of the liabilities of any other party.

6. Based upon a mutually acceptable allocation of the risks, rewards, and benefits of the Project to, and between, Heritage Strategies and Client, Client agrees that, to the fullest extent permitted by law, Heritage Strategies' total liability to Client, Owner(s), and all partners, contractors, subcontractors, and other consultants and participants on the Project for any and all injuries, claims, losses, expenses, or damages arising out of this Agreement from any cause(s) including but not limited to Heritage Strategies' negligence, errors, and omissions shall, in the aggregate, not exceed Heritage Strategies' total fee for services rendered on the Project.

7. Fees and reimbursable expenses shall be invoiced monthly as the work progresses and payment is due upon receipt. Invoices shall be considered correct and accepted if not questioned in writing by Client within fourteen (14) days of receipt. Disputation over any portion of an invoice shall not relieve Client from payment of all undisputed amounts in accordance with the payment terms herein. No retainages shall be withheld from the compensation due. Accounts due over thirty (30) days from invoice submission are subject to carrying charges of 1.5 percent per month (an annual rate of 18%) on the unpaid balance or the maximum interest rate allowed by law, whichever is less, calculated from the submission date of the invoice(s). Prompt payment to Heritage Strategies is a material consideration of this Agreement. Failure to pay any invoice when due shall entitle Heritage Strategies to cease all work on the Project at its option. In the event of such cessation, Client waives all rights, claims, etc. which it might otherwise have against Heritage Strategies as a result of suspending or terminating work.

8. Reimbursable expenses are expenditures made by Heritage Strategies and its consultants in the interest of the Project and include, but are not necessarily limited to expenditures for: travel (lodging, meals, mileage, tolls, common carrier fares, etc.), vehicle rentals, photocopying, books and maps, drawing reproduction, photographic production and printing, commercial printing, binding, postage and express delivery, shipping and handling costs, preparation of renderings or special graphics, and similar expenditures if required for the Project. Reimbursable expenses shall be included in the lump sum fee for the Project.

10. This Agreement may be terminated by either party upon fourteen (14) days written notice should the other party fail substantially to perform in accordance with this Agreement through no fault of the party initiating termination. In the event of termination, Heritage Strategies shall be paid its compensation for all services performed and expenses incurred through the termination date and all expenses directly resulting from termination.

11. Notes, reports, memoranda, drawings, maps, estimates, field data, images, databases, and other Project materials, including those in electronic form, prepared by Heritage Strategies or its consultants are instruments of service and shall remain the property of Heritage Strategies as author and owner, and Heritage Strategies shall retain all statutory, common law, and other reserved rights including the copyright(s) thereof. Notwithstanding the above, however, Heritage Strategies shall permit the use by the Client of work products prepared by Heritage Strategies for the Project consistent with the purposes of the Project. Such work products shall not, however, be conveyed by the Client for use by any third party or used by the Client for any purposes not consistent with the purposes of the Project.

12. All claims and disputes arising out of the performance, interpretation, application, or enforcement of this Agreement shall be referred to mediation under the then current Construction Industry Mediation Rules of the American Arbitration Association prior to any recourse to arbitration or a judicial forum, it being agreed that the venue for any judicial proceeding shall be a court located in Joplin, Missouri. Client and Heritage Strategies agree to include the foregoing provision in all agreements with other independent contractors and consultants retained for the Project. Notwithstanding the foregoing, in the event payment to Heritage Strategies is not made as and when provided for by this Agreement, Heritage Strategies may exercise any remedies available in law or equity and, if Heritage Strategies recovers judgment in any sum, Heritage Strategies shall also recover reasonable counsel fees, carrying charges, and interest, as well as all litigation and collection expenses, witness fees, and court costs. Aside from the foregoing, if either party institutes legal action of any kind against the other for failure or alleged failure to perform, error, omission, or negligence, and such action is not successfully prosecuted, or is dismissed, or if the decision is rendered for the party against which action is brought, the initiating party agrees to pay the party against which action is brought all defense costs.

13. This Agreement shall be governed by the laws of the State of Missouri, and shall be binding upon the parties and their respective successors, assigns, and personal representatives. These General Terms and Conditions together with the Proposal constitute the entire and integrated Agreement between Client and Heritage Strategies, and supersede all prior negotiations, representations, or agreements, whether written or oral except as are specifically incorporated by reference. In the event any provision(s) of this Agreement are held to be invalid and unenforceable, the remaining provisions shall be valid and binding upon the parties. This Agreement may not be amended except by written instrument signed by both Client and Heritage Strategies. Neither party shall assign its interest in this Agreement without the prior written consent of the other party. By executing the Proposal, the Client's signatory represents that he/she is authorized to enter into this Agreement on behalf of Client, and that Client has had benefit of counsel, and understands and agrees to all of the Terms and Conditions herein.

Historic Preservation Plan Update

Subcommittee Review

Consultants	**Reviewer 1**	**Reviewer 2**	**Reviewer 3**	**Reviewer 4**	**Reviewer 5**	**Avg Score**	**Project Cost**
Heritage Strategies	38	38	37	36	39	**37.6**	$50,000
Thomason Associates	40	39	38	36	39	**38.4**	$44,945
Winter & Co.	30	37	31	29	36	**32.6**	$81,695
Susan Richards Johnson	25	34	20	34	29	**28.4**	$70,000
Rosin Preservation	21	25	18	20	34	**23.6**	$49,600
Preservation Research Office	20	18	7	20	20	**17**	$39,800

After narrowing down to our top 2 candidates, the Subcommittee called Heritage Strategies and Thomason Associates to conduct interviews. Following our interviews, we called references for both firms. After talking to references from Thomason Associates - who scored the highest - the Subcommittee did not feel comfortable hiring the firm based on bad experiences voiced by other municipalities. Additionally, during the phone interview, Heritage Strategies seemed to understand the vision that the City of Joplin had for its Preservation Plan.

COUNCIL BILL NO. 2015-367 ORDINANCE NO.

AN ORDINANCE authorizing the City of Joplin to enter into an Agreement with Heritage Strategies for Preservation Planning Services relating to the update of the Preservation Plan; authorizing the City Manager to execute said Agreement for the City; and containing an emergency clause.

BE IT ORDAINED BY THE COUNCIL OF THE CITY OF JOPLIN, MISSOURI, as follows:

Section 1. That the City enter into an Agreement by and between the City of Joplin and Heritage Strategies Consultants dealing generally with the update of the Joplin Preservation Plan amount not to exceed Fifty Thousand dollars ($50,000.00), attached hereto as Exhibit A.

Section 2. That the City Manager is hereby authorized to execute said Agreement, or in substantially similar form, for and on behalf of the City of Joplin.

Section 3. That this Ordinance dealing with a public improvement, is an emergency within the meaning of Section 2.12(1) of the Home Rule Charter of the City of Joplin, Missouri for the immediate preservation of property, and, the same shall be in full force and effect immediately from and after its adoption and approval. Specifically, this Ordinance requires the City of Joplin to initiate the Preservation Plan Update. An emergency exists whereby the failure of updating the plan in a timely manner will cause potential historic properties to fall into disrepair where they are beyond rehabilitation and lost.

PASSED BY THE COUNCIL OF THE CITY OF JOPLIN, MISSOURI, this_____day of_____, 2015, by a vote of_____.

_____
Michael L. Seibert, Mayor

ATTEST:

_____
Barbara L. Hogelin, City Clerk

APPROVED AS TO FORM:

_____
Peter C. Edwards, City Attorney

City of **JOPLIN** City Council Agenda Item

Requested Council Meeting Date: October 5, 2015

Item: Council Bill 2015-367
Originating Department: Planning, Development and Neighborhood Services

Attachments: 1) Professional Service Agreement
2) General Terms and Conditions
3) Council Bill No 2015-367

Department Head: Troy Bolander
Finance Department: Leslie Haase
City Attorney: Peter Edwards
City Manager: Sam Anselm

INTRODUCTION:

This Council Bill authorizes the City of Joplin to enter into Agreement with Heritage Strategies for Preservation Planning Services relating to the update of the City of Joplin's Preservation Plan amount not to exceed Fifty Thousand dollars ($50,000.00).

DISCUSSION:

This Council Bill authorizes the City of Joplin to enter into an Agreement with Heritage Strategies for Preservation Planning Services to update the Preservation Plan, authorizing the City Manager to execute said Agreement in substantially similar form; and containing an emergency clause.

The planning firm will work closely with City staff and leadership and members of the Historic Preservation Commission to update the Preservation Plan. These services will include, but are not limited to field surveys, background information studies, review of existing historical materials, facilitating public and steering committee meetings, making recommendations for further action, and composing a Historic Preservation Plan

RECOMMENDATION:

Staff recommends this Council Bill be approved on an emergency basis within the meaning of Section 2.12(1) of the Home Rule Charter of the City of Joplin, Missouri. An emergency exists whereby the failure of updating the plan in a timely manner will cause potential historic properties to fall into disrepair where they are beyond rehabilitation and lost.

REAL ESTATE CONTRACT

THIS CONTRACT entered into this _____ day of _____ 2015, by and between, Gary L. Selby and Teresa L. Selby, husband and wife hereinafter referred to as the **"Seller"** and **CITY OF JOPLIN, MISSOURI,** a constitutionally chartered Missouri municipal corporation, hereinafter referred to as the **"Buyer".**

W I T N E S S E T H:

1. SALE AND PURCHASE. For and in consideration of the mutual obligations of the parties hereto, the Seller agrees to sell, and the Buyer agrees to buy, upon the terms and conditions hereinafter set out, the real estate described as follows:

1300 W. 26th Street, Joplin, Missouri in Jasper County

Census tract 27900-0107.00

Part of Miscellaneous Tract #2 in Section 15, Township 27, Range 33, in the City of Joplin, Jasper County, Missouri, beginning 80 feet West of the Northwest corner of Lot Numbered Four (4) in Briarcliff Third Addition to the City of Joplin, thence South 300 feet, thence West 115 feet, thence North 300 feet, thence East to the point of beginning.

2. PURCHASE PRICE & CONSIDERATION. The purchase price to be paid by the Buyer therefore is Ninety Six Thousand and 00/100 Dollars ($ 96,000.00). The purchase price shall be payable at closing in cash or by cashier's check. The parties agree that the performance of this agreement and the purchase price and other consideration described herein is offered and accepted as just compensation for the acquisition of real property.

3. CONVEYANCE FORM. The Seller shall convey said real estate to Buyers by Warranty Deed, free and clear of all interest, liens, and encumbrances, except as stated herein.

4. EXCEPTIONS. The real estate shall be conveyed subject to the following:

a) Special assessments made prior to the execution of this contract and becoming a lien thereafter;

b) Zoning ordinances in effect at the date of the signing of this contract;

c) Easements, public or private, of record or not of record, which are clearly apparent to the ordinary person upon ordinary inspection of the premises; and

d) General taxes, State, County, and City, for the year of closing and subsequent years; and other restrictions, covenants, conditions, encumbrances and easements of record. Taxes for the year in which this contract is closed shall be prorated to the date of closing.

5. CLOSING. If the title is deemed good, the closing of this contract shall take place at the offices of Waco Title Company, Joplin, Missouri, on or about October 9, 2015, at which time all monies and papers shall be delivered and all other things called for by this

contract at the time of closing, shall be done. Buyer shall pay all recording fees and closing costs.

6. POSSESSION & RECONSTRUCTION. No later than Thirty (30) days after closing, Seller shall vacate the property.

7. HAZARDOUS MATERIALS. Prior to the Closing Date, that City will have the option to inspect and assess the property for the existence of any hazardous materials or contamination on the property or in the sub-surface area below the property. If the inspection or assessment reveals the existence of any hazardous materials or contamination, the City will have the absolute and unconditioned right to terminate this Agreement.

8. RIGHT OF ENTRY. Prior to the Closing Date, with reasonable notice to Seller, Seller hereby authorizes Buyer, its assigns, successors in interest, agents, representatives, and consultants, sub-contractors, and prospective tenants, and their agents, representatives, and consultants, and sub-contractors, to enter the Property in order to investigate and inspect the Property and to perform any such tests they deem appropriate.

9. HOLD HARMLESS.

a) Seller hereby agrees to hold Buyer harmless against and from any and all loss, suits, causes of action, proceedings, costs, damages, liabilities and expense arising from the breach of any of Seller's representations, warranties, covenants or agreements herein contained. Such costs and expenses shall include, without limitation, attorneys' fees and costs of litigation arising out of or relating to Seller's breach.

b) Buyer hereby agrees to hold Seller harmless against and from any and all loss, suits, causes of action, proceedings, costs, damages, liabilities and expense arising from the breach of any of Buyer's representations, warranties, covenants or agreements herein contained, and from any injury or damage to Buyer, or its agents which occur upon, or at the property, during the inspection period. Such costs and expenses shall include, without limitation, attorneys' fees and costs of litigation arising out of or relating to Buyer's breach.

10. CLOSING REQUIREMENTS. Closing shall occur after approval of title commitment, as described hereinabove.

a) At closing, Seller shall do the following:

1. Duly execute, acknowledge and deliver to Buyer, a Special Warranty Deed conveying the Property to Buyer, free and clear of all liens, claims, pledges and encumbrances, except as set forth in Section 4 above.

2. Execute, acknowledge and deliver to Buyer such documentation as may be reasonably required to confirm the power and authority of the Seller to execute and deliver this Contract and all other documents necessary or advisable to consummate the transactions contemplated under this Contract.

b) At closing, Buyer shall do the following:

1. Execute and provide at closing, all documents reasonably required by the Seller for closing.

2. Tender payment at closing for the purchase price and all associated closing costs described herein.

11. DEFAULT.

a) Seller's Breach: If all conditions precedent to said closing have been satisfied, and Seller refuses to close, then Seller shall pay unto Buyer, all Buyer's reasonable out-of-pocket costs associated with the purchase, such as surveying, engineering, etc., and Buyer shall have no further recourse against Seller.

b) Buyer's Breach: If Buyer fails to perform its obligations under this Contract, after all conditions precedent have been satisfied, the Buyer shall pay unto Seller, its out-of-pocket expenses such as title work, surveying, engineering, etc., and Seller shall have no recourse.

12. TITLE COMMITMENT. Buyer will obtain a title commitment and if the title is not good and marketable and Seller cannot remedy the problem, Buyer can terminate the contract. Buyer shall obtain the title commitment within thirty (30) days of the date first written above and shall notify Seller within those thirty (30) days of any problem, and if said problem is not resolved to the satisfaction of either party within twenty (20) days of notification, either party may terminate the contract.

13. SURVIVAL. Seller's and Buyer's representations and warranties set forth in this Contract shall be continuing and shall be true and correct on and as of the date of closing with the same force and effect as if made at the time. Each Party's covenants, warranties, and representations shall survive closing and shall not be affected by delivery of deed or any other closing documents or by any investigation, verification or approval by Buyer or by anyone on behalf of Buyer.

14. ASSIGNMENT. Neither party shall have the right and authority to assign this Contract without the other’s consent.

15. ENTIRE AGREEMENT. This Contract constitutes the entire agreement between the parties with respect to the subject matter hereof and there are no oral representations, warranties, conditions or agreements, expressed or implied, other than those expressly set forth herein. This Contract supersedes all previous negotiations, agreements and the like. No modifications to this Contract shall be effective unless in writing and signed by all parties to this Contract.

16. BINDING EFFECT. The terms, provisions, covenants, and conditions in this Contract shall apply to, and inure to, the benefit of, and be binding upon, the parties hereto and their respective successors in interest and assigns as herein permitted.

17. GOVERNING LAW. This Contract shall be governed by, and constructed in accordance with, the laws of the State of Missouri and in accordance with the Uniform Relocation Assistance and Real Property Acquisition Policies Act of 1970.

18. TIME. Time is of the essence of this Contract and each and every obligation of Seller under this Contract.

19. POSSESSION. The Seller shall provide Buyer full and exclusive possession upon closing, free and clear of any leases, written or oral, concerning the premises.

20. CONTINGENT UPON APPROVAL. This contract is contingent upon Buyer obtaining approval of this contract by its City Council, which Buyer shall obtain within thirty (30) days of the execution of the contract.

IN WITNESS WHEREOF, the parties have hereunto set their hands to this Contract, the day and year first above written.

City of Joplin Missouri, a
Missouri Municipal Corporation

By_____

Samuel L. Anselm, City Manager

"**BUYER"**

_____

Gary L Selby

_____

Teresa L. Selby

"SELLER"

Attest:

By_____

Barbara Hogelin, City Clerk

Approved as to Form:

By_____

Peter C. Edwards, City Attorney

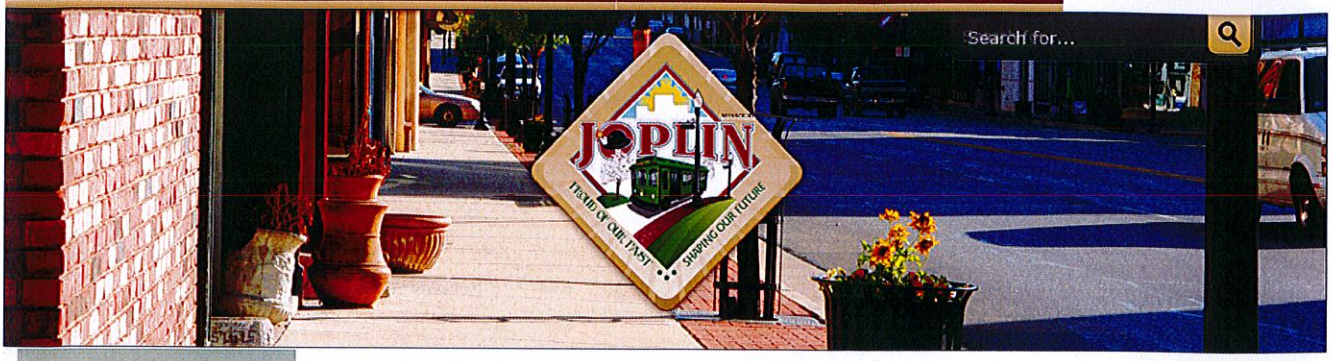

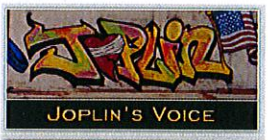

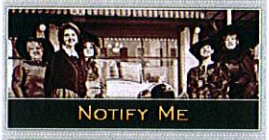

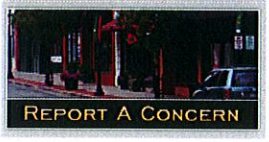

Sign up to receive a text message or email when new bids are added!

Format for Printing

Bid Number:	2015-011
Bid Title:	Joplin Public Park - 2015-011
Category:	Public Works
Status:	Closed
Additional Status Information:	Mandatory PreBid Meeting/Site Visit 8/11/15, 10:00 AM

Description:

CITY OF JOPLIN, MISSOURI

MUNICIPAL FACILITIES

602 S. Main Street, Joplin, MO 64801

INVITATION FOR BID NO.: 2015-011

OPEN DATE: August 2, 2015

NOTICE TO CONTRACTORS

The City of Joplin, ("the City"), Missouri has received funds from the Department of Housing and Urban Development (HUD) through the Community Development Block Grant – Disaster Recovery Program (CDBG-DR). Sealed bids will be accepted for the following project on the bid date shown below, and then publicly opened and read aloud:

JOPLIN PUBLIC PARK.

The Project consists primarily of all work described on the drawings and specifications, including but not limited to, selective demolition of existing site features, parking and loop trail development with lighting, earthmoving, landscape enhancements, site utilities, creation of a lake and onsite storm water management, and support features including restrooms, shelters, and site furnishings.

Sealed bids will be accepted at Joplin City Hall, 602 S. Main Street, 4th Floor; Joplin, MO 64801 until 2pm, CST, August 27, 2015 and read aloud.

Pre-bid Conference/Site Investigation; A mandatory pre-bid conference and site investigation will be held at 10 am, CST August 11, 2015 located at Joplin City Hall, 602 S. Main St., 5th Floor. Staff and Design Team members will be available at the project site at 11:15 am until 12:30 for any questions following the prebid meeting. All bidders are strongly encouraged to review the work site.

Plans and Specifications for the project are available by contacting Derek Don (derekd@swtdesign.com).

In the subject line, please indicate "Joplin Public Park – Request for Drawings and Specifications."

All questions shall be submitted in writing by 2pm, CST on August 19, 2015 to CDBG-RFP@joplinmo.org and derekd@swtdesign.com. In the subject line include "Joplin Public Park." Phone calls will not be answered or returned.

Contact for Contract or Bidding Issues: Tony Robyn at trobyn@joplinmo.org or alternate Patty Heagel at pheagel@joplinmo.org.

Contact for Design Issues: Tony Robyn at trobyn@joplinmo.org and CDBG-RFP@joplinmo.org.

Bid Security: A bid security equivalent to five (5%) percent of the bid price will be required from each Bidder. The "bid security" shall consist of a firm commitment such as a bid bond, certified check, or other negotiable instrument accompanying a bid as assurance that the Bidder will, upon acceptance of this bid, execute such contractual documents as may be required within the time specified; said Bidder's bond or check to be paid unconditionally to the City of Joplin, Missouri.

Subcontractors: The Bidder shall submit a list of subcontractors with their bid.

Performance Bond and Labor and Materials Payment Bond: A Performance Bond and a Labor and Materials Payment Bond on the City's standard forms for the full amount of the contract will be required of the successful Bidder.

Prevailing Wage: All labor utilized in the construction of above public improvements shall be paid a wage of no less than the

My Favorites Pages Modules Live Edit Tony Help

prevailing hourly rate of wages of work of a similar character in this locality as established by the Missouri Department of Labor and Industrial Relations in accordance with the Federal Davis-Bacon Act, whichever is higher. This project is classified in the Heavy Construction category and if a classification is not found in this category, the contractor shall refer to the Building category and use the higher rate.

Non-Discrimination Policy: The City of Joplin hereby notifies all bidders that it will affirmatively ensure that in any contract entered into pursuant to this advertisement, disadvantaged business enterprises will be afforded full opportunity to submit bids in response to this invitation and will not be discriminated against on the grounds of race, color, or national origin in consideration for an award.

Insurance: The successful Bidder shall comply with certain insurance requirements as specified in the Joplin Public Park INVITATION FOR BID documents.

Statement of Qualifications: The Bidder must have a current Statement of Qualifications on file with the City otherwise such statement must be submitted with the Bidder's proposal.

Withdrawal of Bids: The city reserves the right to reject any and all bids and to waive informalities in bids.

No bid may be withdrawn for a period of sixty (60) days after the time set for receipt and opening of bids.

The City of Joplin is and Equal Opportunity Employer. We encourage all small and minority owned firms and women's business enterprises to apply.

Any person with disabilities requiring special accommodations must contact the City of Joplin – Department of Public Works no later than 7 days prior to the bid opening.

PLEASE CHECK THIS BID REQUEST REGULARLY TO CHECK FOR ADDENDUMS OR OTHER UPDATES.

Publication Date/Time:
7/30/2015 6:00 PM
Publication Information:
Joplin Globe and City Website
Closing Date/Time:
8/27/2015 2:00 PM
Submittal Information:
602 S. Main, Joplin, MO 64801 4th Flr. Attn: Tony Robyn
Bid Opening Information:
8/27/2015, 2:00 PM
Related Documents:
Joplin Public Park Addendum - 1
Joplin Public Park Addendum-2
Joplin Public Park Addendum 3
Joplin Public Park Addendum - 4
Joplin Public Park Addendum - 5

Return To Main Bid Postings Page



THE JOPLIN GLOBE
PO BOX 7
JOPLIN MO 64802-0007
(417)623-3480

ORDER CONFIRMATION

Salesperson: SHARON FITZJOHN — Printed at 07/31/15 11:56 by sfitz

---

Acct #: 4186 — Ad #: 814541 — Status: N

CITY OF JOPLIN
FINANCE DEPARTMENT
602 S MAIN STREET
JOPLIN MO 64801

Start: 08/02/2015 — Stop: 08/02/2015
Times Ord: 1 — Times Run: ***
STD 1.00 X 7.10 — Words: 381
Total STD 7.25
Class: 147 LEGALS
Rate: LD — Cost: 346.19
Affidavits: 1

Contact: ROCHELLE FORSYTHE
Phone: (417)624-0820
Fax#: (417)624-4620
Email: LDunn@Joplinmo.org
Agency:

Ad Descrpt: LEGAL 017/PARK BID
Given by: *
Created: sfitz 07/31/15 09:06
Last Changed: sfitz 07/31/15 11:55

PUB	ZONE	EDT	TP	START	INS	STOP	SMTWTFS
JG	A	97	S	08/02			
INET	A	10	S	08/02			

AUTHORIZATION

Thank you for advertising in The Joplin Globe, our related publications and online properties. If you are advertising in The Joplin Globe classifieds, your ad will begin running on the start date noted above.

Please be sure to check your ad proof for any corrections. Although we are happy to make corrections during our regular business hours, you are responsible for checking your ad proof prior to the publish date. Also, we reserve the right to edit or reclassify your ad to better serve buyers and sellers.

We appreciate your business.

_____ _____

Name (print or type) — Name (signature)

(CONTINUED ON NEXT PAGE)

THE JOPLIN GLOBE
PO BOX 7
JOPLIN MO 64802-0007
(417)623-3480

ORDER CONFIRMATION (CONTINUED)

Salesperson: SHARON FITZJOHN Printed at 07/31/15 11:56 by sfitz

---

Acct #: 4186 Ad #: 814541 Status: N

(First Published August 2, 2015)
ADVERTISEMENT FOR BID

Bids will be accepted by the City of Joplin- Department of Planning, Development and Neighborhood Services, at 602 S. Main Street, 4th Floor, Joplin, MO 64801 until 2 pm, CST, on August 27, 2015, for the "JOPLIN PUBLIC PARK" #2015-011, Attn; Tony Robyn.

Notice to Contractors #2015-011.

The City of Joplin ("the City"), Missouri has received funds from the Department of Housing and Urban Development (HUD) through the Community Development Block GrantDisaster Recovery Program (CDBG-DR). Joplin Public Park, a passive recreational 17+ acre park will consist of demolition of existing site features, parking, loop trail development, lighting, earthmoving, landscape enhancements, site utilities, creation of a lake and onsite storm water management, and support features including restrooms, shelters, and various site furnishings.

Plans and Specifications may be obtained by directing your inquiry to Derek Don (derekd@swtdesign.com). In the subject line indicate "Joplin Public Park Request for Drawings and Specifications." The requester will be granted a link to an FTP site to download the drawings and specifications.

A mandatory pre-bid meeting and walk-through for all prime bidders will be held at Joplin City Hall, 5th Floor at 10 am, CST, on August 11, 2015.

The City of Joplin hereby notifies all bidders that it will affirmatively ensure that in any contract entered into pursuant to this advertisement, disadvantaged business enterprises will be afforded full opportunity to submit bids in response to this invitation and will not be discriminated against on the grounds of race, color, or national origin in consideration for an award.

For questions contact Derek Don with SWT Design via email at derekd@swtdesign.com and copy CDBG-RFP@joplinmo.org.

Note: All labor shall be paid no less than Missouri Prevailing Wage in accordance with the Federal Davis-Bacon Act (Title 40 U.S.C. Chapter 31, subchapter IV), for heavy construction projects or whichever is higher.

The City of Joplin is an Equal Opportunity Employer. We encourage all small and minority owned firms and women's business enterprises to apply.

Any persons with disabilities requiring special accommodations must contact the City of Joplin Department of Public Works no later than 7 days prior to the bid opening.

The City of Joplin reserves the right to reject any or all bids.

Tony Robyn
Assistant Director
Planning, Development
& Neighborhood Services

(017)

SECTION 009113 – **ADDENDA #1**

PART 1 - Addenda

1.1 PROJECT INFORMATION

A. Project Name: Joplin Public Park.

B. Owner: City of Joplin, MO.

C. Owner Project Number: 2015-011.

D. Landscape Architect: SWT Design.

E. Architect Project Number: 220288.01.

F. Date of Addendum: August, 6, 2015.

1.2 NOTICE TO BIDDERS

A. This Addendum is issued to all registered plan holders pursuant to the Instructions to Bidders and Conditions of the Contract. This Addendum serves to clarify, revise, and supersede information in the Project Manual, Drawings, and previously issued Addenda. Portions of the Addendum affecting the Contract Documents will be incorporated into the Contract by enumeration of the Addendum in the Owner/Contractor Agreement.

B. The Bidder shall acknowledge receipt of this Addendum in the appropriate space on the Bid Form.

C. The date for receipt of bids is unchanged by this Addendum, at same time and location.

1. Bid Date: August 27, 2015.

1.3 ATTACHMENTS

A. This Addendum includes no attachments.

1.1 CLARIFICATIONS

A. There are a total of five (5) interpretive signs, detail E / L502. Locations to be field located and coordinated with owner during construction. Size, material, and finish noted on detail.

B. The chimney swift tower, detail H / L502 is 8'-0" tall from grade.

C. **[Q:]** Alternate #1&2 states that base bid will include concrete walks and paving, sheet S103 indicates that concrete slab is by others. **[A:]** By others indicates by general contractor or

SECTION 012300 - ALTERNATES

PART 1 - GENERAL

1.1 RELATED DOCUMENTS

A. Drawings and general provisions of the Contract, including General and Supplementary Conditions and other Division 01 Specification Sections, apply to this Section.

1.2 SUMMARY

A. Section includes administrative and procedural requirements for alternates.

1.3 DEFINITIONS

A. Alternate: An amount proposed by bidders and stated on the Bid Form for certain work defined in the bidding requirements that may be added to or deducted from the base bid amount if Owner decides to accept a corresponding change either in the amount of construction to be completed or in the products, materials, equipment, systems, or installation methods described in the Contract Documents.

1. Alternates described in this Section are part of the Work only if enumerated in the Agreement.
2. The cost or credit for each alternate is the net addition to or deduction from the Contract Sum to incorporate alternate into the Work. No other adjustments are made to the Contract Sum.

1.4 PROCEDURES

A. Coordination: Revise or adjust affected adjacent work as necessary to completely integrate work of the alternate into Project.

1. Include as part of each alternate, miscellaneous devices, accessory objects, and similar items incidental to or required for a complete installation whether or not indicated as part of alternate.

B. Notification: Immediately following award of the Contract, notify each party involved, in writing, of the status of each alternate. Indicate if alternates have been accepted, rejected, or deferred for later consideration. Include a complete description of negotiated revisions to alternates.

C. Execute accepted alternates under the same conditions as other work of the Contract.

D. Schedule: A schedule of alternates is included at the end of this Section. Specification Sections referenced in schedule contain requirements for materials necessary to achieve the work described under each alternate.

PART 2 - PRODUCTS (Not Used)

PART 3 - EXECUTION

3.1 SCHEDULE OF ALTERNATES

A. Alternate No. 1: 10' Sidewalk along 26th St.

1. Base Bid: Connection to corner of 26th St. and McClelland."
2. 4" thick concrete, 10' wide walk along remainder of 26th St. as indicated on the drawings.

B. Alternate No. 2: Large Shelter

1. Base Bid: Install concrete walk and paving, drinking fountain, flagstones in the water, and boulder work along lake edge as indicated on Sheet L102 – Materials and Notes Area B.
2. Alternate: Add shelter, footings, and electrical/lighting as indicated on Sheet L530, L531 – Large Shelter (Alternate 1) and as specified in Section 033000 "Cast-In-Place Concrete" and "Division 26 – Electrical Specifications."

C. Alternate No. 3: Pedestrian Lighting

1. Base Bid: Install conduit for all pedestrian light poles as indicated on Sheet E101 – E103 Electrical Site Plan Area A-C.
2. Alternate: Add light poles, fixtures, and foundations as indicated on Sheet E101-E103 and as specified in Section "260526 Grounding and Bonding for Electrical Systems," "260529 Hangers and Supports for Electrical Systems," and "265600 Exterior Lighting."

D. Alternate No. 4: Small Shelter.

1. Base Bid: Install concrete walk and drinking fountain as indicated on Sheet L101 – Materials and Notes Area A.
2. Alternate: Add shelter, footings, and electrical lighting as indicated on Sheet and as specified in Section 033000 "Cast-In-Place Concrete" and "Division 26 – Electrical Specifications."

E. Alternate No. 5: Boardwalk.

1. Alternate: Add PermaTrak Boardwalk, associated footings, and boulders as indicated on Sheet L550 and as specified in Section 033000 "Cast-In-Place Concrete" and Appendix D specifications and Appendix B (Geotechnical Report).

F. Alternate No. 6: Council Ring.

1. Base Bid: Install sod as specified in Section 329200 "Turf & Grasses."
2. Alternate: Deduct sod, add boulder steps, flagstone, boulder seat walls, boulder wall at edge of lake and flagstone in water as indicated on Sheet L560 "Council Ring Alternate 4" and as specified in Section 321400 "Unit Paving" and 323223 "Segmental Retaining Walls."

G. Alternate No. 7: Pine Savanna Seed Mix

1. Base Bid: Install turf seed in all areas indicated on Sheet L153 "Seed/Sod Planting Plan Area C and as specified in Section 329200 "Turf & Grasses."

2. Add Pine Savanna Seed Mix in areas indicated on L153 "Seed/Sod Planting Plan Area C and as specified in Section 329200 "Turf & Grasses."

H. Alternate No. 8: Short Grass Prairie Seed Mix

1. Base Bid: Install turf seed in all areas indicated on Sheets L151-153 "Seed/Sod Planting Plan Area A-C and as specified in Section 329200 "Turf & Grasses."
2. Alternate: Add Short Grass Prairie Seed Mix in areas indicated on L151-L153 "Seed/Sod Planting Plan Area A-C and as specified in Section 329200 "Turf & Grasses."

I. Alternate No. 9: Base Bid Native Landscape Establishment and Maintenance

1. Base Bid: Establishment and maintenance services until issuance of Substantial Completion and as specified in Section 329200 "Turf & Grasses."
2. Alternate: Provide cost for three year period to maintain and establish Meadow and Short Grass Prairie in areas indicated on L151-L153 "Seed/Sod Planting Plan Area A-C" and as specified in Section 329200 "Turf & Grasses."

J. Alternate No. 10: Pine Savanna Establishment and Maintenance

1. Base Bid: none.
2. Alternate: Provide cost for three year period to maintain and establish Pine Savanna mix in areas indicated o L153 "Seed/Sod Planting Plan Area C" and as specified in Section 329200 "Turf & Grasses."

K. Alternate No. 11: Short Grass Prairie Establishment and Maintenance

1. Base Bid: none.
2. Alternate: Provide cost for three year period to maintain and establish Short Grass Prairie in areas indicated on L151-L153 "Seed/Sod Planting Area A-C" and as specified in Section 329200 "Turf & Grasses."

END OF SECTION 012300

SECTION 009113 - **ADDENDA #3**

PART 1 - Addenda

1.1 PROJECT INFORMATION

A. Project Name: Joplin Public Park.

B. Owner: City of Joplin, MO.

C. Owner Project Number: 2015-011.

D. Architect: SWT Design.

E. Architect Project Number: 220288.01.

F. Date of Addendum: August 18, 2015.

1.2 NOTICE TO BIDDERS

A. This Addendum is issued to all registered plan holders pursuant to the Instructions to Bidders and Conditions of the Contract. This Addendum serves to clarify, revise, and supersede information in the Project Manual, Drawings, and previously issued Addenda. Portions of the Addendum affecting the Contract Documents will be incorporated into the Contract by enumeration of the Addendum in the Owner/Contractor Agreement.

B. The Bidder shall acknowledge receipt of this Addendum in the appropriate space on the Bid Form.

C. The date for receipt of bids is unchanged by this Addendum, at same time and location.

1. Bid Date: August 27, 2015.

1.3 ATTACHMENTS

A. This Addendum includes the following attached Documents:
1. Exhibit A: Questions and answers received since Addendum #2 was issued.
2. Exhibit B: Questions and answers that were not answered as part of Addendum #2.

B. This Addendum includes the following attached Specification Sections:
1. Exhibit C: Section 004323 Alternate Form, dated August 18, 2015, (reissued).
2. Exhibit D: Section 012300 Alternates, dated August 18, 2015, (reissued).

C. This Addendum includes the following attached Drawing Sheets, Exhibit E:
1. Civil Sheets; D100, D102, D103, dated August 18, 2015 (reissued).
2. Electrical Sheets; E100, E102, E103, E500, E600, dated August 18, 2015 (reissued).

1.4 REVISIONS TO DIVISION 00 PROCUREMENT REQUIREMENTS AND CONTRACTING REQUIREMENTS

A. Document 004323 Alternates Form.

1. Paragraph 1.3, Items C, D, E, and F.

2. Paragraph1.4, Alternates were renumbered to reflect Alternates 0012300.

1.5 REVISIONS TO DIVISION 01 GENERAL REQUIREMENTS

A. Specification Section 012300 Alternates.

1. Paragraph 3.1, Alternates were renumbered to reflect prioritized order of acceptance.

1.6 CLARIFICATIONS

A. Soils Remediation:

1. Appendix C – Soils Investigation by Kent and Associates, Section 4.1.
   a. Contaminated soils do not need to be excavated and transported to the EPA designated soils repository.
   b. Per Jasper County Environmental Contamination Ordinance Appendix A Soils allows for remediation with 12" of clean soils in place only if disturbed.
   c. Proposed grading plan reflects the 12" of soil in these areas.
   d. No excavation and hauling of contaminated soils to the EPA designated repository is anticipated in the project scope of services.

B. Unit Prices:

1. Per Specification Section 012200 Unit Prices, Paragraph 1.4, unit prices include all necessary material, plus cost for delivery, installation, insurance, applicable taxes, overhead, and profit.
2. Specification Sections 004322.00 and 004322.01 require unit prices to be provided.

END OF SECTION 009113

EXHIBIT A

QUESTIONS AND ANSWERS SINCE ADDENDUM #2

JOPLIN PUBLIC PARK

QUESTIONS / ANSWERS

1. **Q:** In regards to the Pedestrian Lighting Alternate (now #3, see 012300 Alternates), are the light pole bases part of the base bid? If pedestrian lighting pole bases are not part of the base bid, are we to put junction boxes near every type A pole base?
   A: Section 012300 defines the pedestrian lighting alternate as the installation of the light poles, foundations, and wiring. Junction boxes are not to be installed at each pole location in base bid, only conduit stubbed to each location.

2. **Q:** Is there a preference on seed vendors for the native live seed?
   A: No preference on vendor, but seed should be sourced from within the ecoregion, approximately 180 mile radius.

EXHIBIT B

PRE-BID MEETING QUESTIONS AND ANSWERS NOT ANSWERED AS PART OF ADDENDUM #2

JOPLIN PUBLIC PARK

PRE-BID MEETING

QUESTIONS / ANSWERS / CLARIFICATIONS NOT ADDRESSED IN ADDENDUM #2
August 11, 2015
10:00am @ Joplin City Hall, 5th Floor

6. **Q:** Is there an alternate approach from what is referenced in the geotechnical report?
A: See geotechnical report for details.

8: **Q:** Can we use PEB's in lieu of PGA's for the irrigation system?
A: PEB's would be acceptable in lieu of PGA's, but base scope still includes PGA's.

12: **Q:** Who will be responsible for paying the utility tap fee?
A: General Contractor will be responsible.

15: **Q:** Is it anticipated for there to excavation of bedrock?
A: Results of subsurface conditions are in the geotechnical report.

EXHIBIT C

004323 ALTERNATE FORM

SECTION 004323 - ALTERNATES FORM

PART 1 - Alternates Form

1.1 BID INFORMATION

A. Bidder: _____.

B. Project Name: Joplin Public Park.

C. Project Location: Southeast corner of 26th St. and McClelland Blvd., Joplin, MO.

D. Owner: City of Joplin, MO.

E. Owner Project Number: 2015-011.

F. Landscape Architect: SWT Design.

G. Landscape Architect Project Number: 20288.01.

1.2 BID FORM SUPPLEMENT

A. This form is required to be attached to the Bid Form.

1.3 DESCRIPTION

A. The undersigned Bidder proposes the amount below be added to or deducted from the Base Bid if particular alternates are accepted by Owner. Amounts listed for each alternate include costs of related coordination, modification, or adjustment.

B. If the alternate does not affect the Contract Sum, the Bidder shall indicate "NO CHANGE."

~~C. If the alternate does not affect the Work of this Contract, the Bidder shall indicate "NOT APPLICABLE."~~

D. The Bidder shall be responsible for determining from the Contract Documents the effects of each alternate on the ~~Contract Time and the~~ Contract Sum.

E. Owner will accept alternates in the order indicated, and reserves the right to award or amend the Contract accordingly within [**90**] days of the Notice of Award unless otherwise indicated in the Contract Documents.

F. Acceptance or non-acceptance of any alternates by the Owner shall have no effect on the Contract Time ~~unless the "Schedule of Alternates" Article below provides a formatted space for the adjustment of the Contract Time~~.

1.4 SCHEDULE OF ALTERNATES

A. Alternate No. 1: 10' Sidewalk along 26th St:

1. ADD____ DEDUCT____ NO CHANGE____ NOT APPLICABLE____.

2. _____ Dollars ($_____).

B. Alternate No. 2: Large Shelter:

1. ADD____ DEDUCT____ NO CHANGE____ NOT APPLICABLE____.

2. _____ Dollars ($_____).

C. Alternate No. 3: Pedestrian Lighting:

1. ADD____ DEDUCT____ NO CHANGE____ NOT APPLICABLE____.

2. _____ Dollars ($_____).

D. Alternate No. 4: Boardwalk:

1. ADD____ DEDUCT____ NO CHANGE____ NOT APPLICABLE____.

2. _____ Dollars ($_____).

E. Alternate No. 5: Small Shelter:

1. ADD____ DEDUCT____ NO CHANGE____ NOT APPLICABLE____.

2. _____ Dollars ($_____).

F. Alternate No. 6: Council Ring:

1. ADD____ DEDUCT____ NO CHANGE____ NOT APPLICABLE____.

2. _____ Dollars ($_____).

G. Alternate No. 7: Pine Savanna Seed Mix:

1. ADD____ DEDUCT____ NO CHANGE____ NOT APPLICABLE____.

2. _____ Dollars ($_____).

H. Alternate No. 8: Short Grass Prairie Seed Mix:

1. ADD____ DEDUCT____ NO CHANGE____ NOT APPLICABLE____.

2. _____ Dollars ($_____).

I. Alternate No. 9: Base Bid Native Landscape Establishment and Maintenance:

1. ADD____ DEDUCT____ NO CHANGE____ NOT APPLICABLE____.

2. _____ Dollars ($_____).

J. Alternate No. 10: Pine Savanna Establishment and Maintenance:

1. ADD____ DEDUCT____ NO CHANGE____ NOT APPLICABLE____.

2. _____ Dollars ($_____).

K. Alternate No. 11: Short Grass Prairie Establishment and Maintenance:

1. ADD____ DEDUCT____ NO CHANGE____ NOT APPLICABLE____.

2. _____ Dollars ($_____).

1.5 SUBMISSION OF BID SUPPLEMENT

A. Respectfully submitted this ____ day of _____, 2015.

B. Submitted By:_____(Insert name of bidding firm or corporation).

C. Authorized Signature:_____(Handwritten signature).

D. Signed By:_____(Type or print name).

E. Title:_____(Owner/Partner/President/Vice President).

END OF SECTION 004323

EXHIBIT D

012300 ALTERNATES

SECTION 012300 - ALTERNATES

PART 1 - GENERAL

1.1 RELATED DOCUMENTS

A. Drawings and general provisions of the Contract, including General and Supplementary Conditions and other Division 01 Specification Sections, apply to this Section.

1.2 SUMMARY

A. Section includes administrative and procedural requirements for alternates.

1.3 DEFINITIONS

A. Alternate: An amount proposed by bidders and stated on the Bid Form for certain work defined in the bidding requirements that may be added to or deducted from the base bid amount if Owner decides to accept a corresponding change either in the amount of construction to be completed or in the products, materials, equipment, systems, or installation methods described in the Contract Documents.

1. Alternates described in this Section are part of the Work only if enumerated in the Agreement.
2. The cost or credit for each alternate is the net addition to or deduction from the Contract Sum to incorporate alternate into the Work. No other adjustments are made to the Contract Sum.

1.4 PROCEDURES

A. Coordination: Revise or adjust affected adjacent work as necessary to completely integrate work of the alternate into Project.

1. Include as part of each alternate, miscellaneous devices, accessory objects, and similar items incidental to or required for a complete installation whether or not indicated as part of alternate.

B. Notification: Immediately following award of the Contract, notify each party involved, in writing, of the status of each alternate. Indicate if alternates have been accepted, rejected, or deferred for later consideration. Include a complete description of negotiated revisions to alternates.

C. Execute accepted alternates under the same conditions as other work of the Contract.

D. Schedule: A schedule of alternates is included at the end of this Section. Specification Sections referenced in schedule contain requirements for materials necessary to achieve the work described under each alternate.

PART 2 - PRODUCTS (Not Used)

PART 3 - EXECUTION

3.1 SCHEDULE OF ALTERNATES

A. Alternate No. 1: 10' Sidewalk along 26th St.

1. Base Bid: Connection to corner of 26th St. and McClelland."
2. 4" thick concrete, 10' wide walk along remainder of 26th St. as indicated on the drawings.

B. Alternate No. 2: Large Shelter

1. Base Bid: Install concrete walk and paving, drinking fountain, flagstones in the water, and boulder work along lake edge as indicated on Sheet L102 – Materials and Notes Area B.
2. Alternate: Add shelter, footings, and electrical/lighting as indicated on Sheet L530, L531 – Large Shelter (Alternate 1) and as specified in Section 033000 "Cast-In-Place Concrete" and "Division 26 – Electrical Specifications."

C. Alternate No. 3: Pedestrian Lighting

1. Base Bid: Install conduit for all pedestrian light poles as indicated on Sheet E101 – E103 Electrical Site Plan Area A-C.
2. Alternate: Add light poles, fixtures, and foundations as indicated on Sheet E101-E103 and as specified in Section "260526 Grounding and Bonding for Electrical Systems," "260529 Hangers and Supports for Electrical Systems," and "265600 Exterior Lighting."

D. Alternate No. 4: Boardwalk.

1. Alternate: Add PermaTrak Boardwalk, associated footings, and boulders as indicated on Sheet L550 and as specified in Section 033000 "Cast-In-Place Concrete" and Appendix D specifications and Appendix B (Geotechnical Report).

E. Alternate No. 5: Small Shelter.

1. Base Bid: Install concrete walk and drinking fountain as indicated on Sheet L101 – Materials and Notes Area A.
2. Alternate: Add shelter, footings, and electrical lighting as indicated on Sheet and as specified in Section 033000 "Cast-In-Place Concrete" and "Division 26 – Electrical Specifications."

F. Alternate No. 6: Council Ring.

1. Base Bid: Install sod as specified in Section 329200 "Turf & Grasses."
2. Alternate: Deduct sod, add boulder steps, flagstone, boulder seat walls, boulder wall at edge of lake and flagstone in water as indicated on Sheet L560 "Council Ring Alternate 4" and as specified in Section 321400 "Unit Paving" and 323223 "Segmental Retaining Walls."

G. Alternate No. 7: Pine Savanna Seed Mix

1. Base Bid: Install turf seed in all areas indicated on Sheet L153 "Seed/Sod Planting Plan Area C and as specified in Section 329200 "Turf & Grasses."

2. Add Pine Savanna Seed Mix in areas indicated on L153 "Seed/Sod Planting Plan Area C and as specified in Section 329200 "Turf & Grasses."

H. Alternate No. 8: Short Grass Prairie Seed Mix

1. Base Bid: Install turf seed in all areas indicated on Sheets L151-153 "Seed/Sod Planting Plan Area A-C and as specified in Section 329200 "Turf & Grasses."
2. Alternate: Add Short Grass Prairie Seed Mix in areas indicated on L151-L153 "Seed/Sod Planting Plan Area A-C and as specified in Section 329200 "Turf & Grasses."

I. Alternate No. 9: Base Bid Native Landscape Establishment and Maintenance

1. Base Bid: Establishment and maintenance services until issuance of Substantial Completion and as specified in Section 329200 "Turf & Grasses."
2. Alternate: Provide cost for three year period to maintain and establish Meadow and Short Grass Prairie in areas indicated on L151-L153 "Seed/Sod Planting Plan Area A-C" and as specified in Section 329200 "Turf & Grasses."

J. Alternate No. 10: Pine Savanna Establishment and Maintenance

1. Base Bid: none.
2. Alternate: Provide cost for three year period to maintain and establish Pine Savanna mix in areas indicated o L153 "Seed/Sod Planting Plan Area C" and as specified in Section 329200 "Turf & Grasses."

K. Alternate No. 11: Short Grass Prairie Establishment and Maintenance

1. Base Bid: none.
2. Alternate: Provide cost for three year period to maintain and establish Short Grass Prairie in areas indicated on L151-L153 "Seed/Sod Planting Area A-C" and as specified in Section 329200 "Turf & Grasses."

END OF SECTION 012300

EXHIBIT E

DRAWING SHEETS

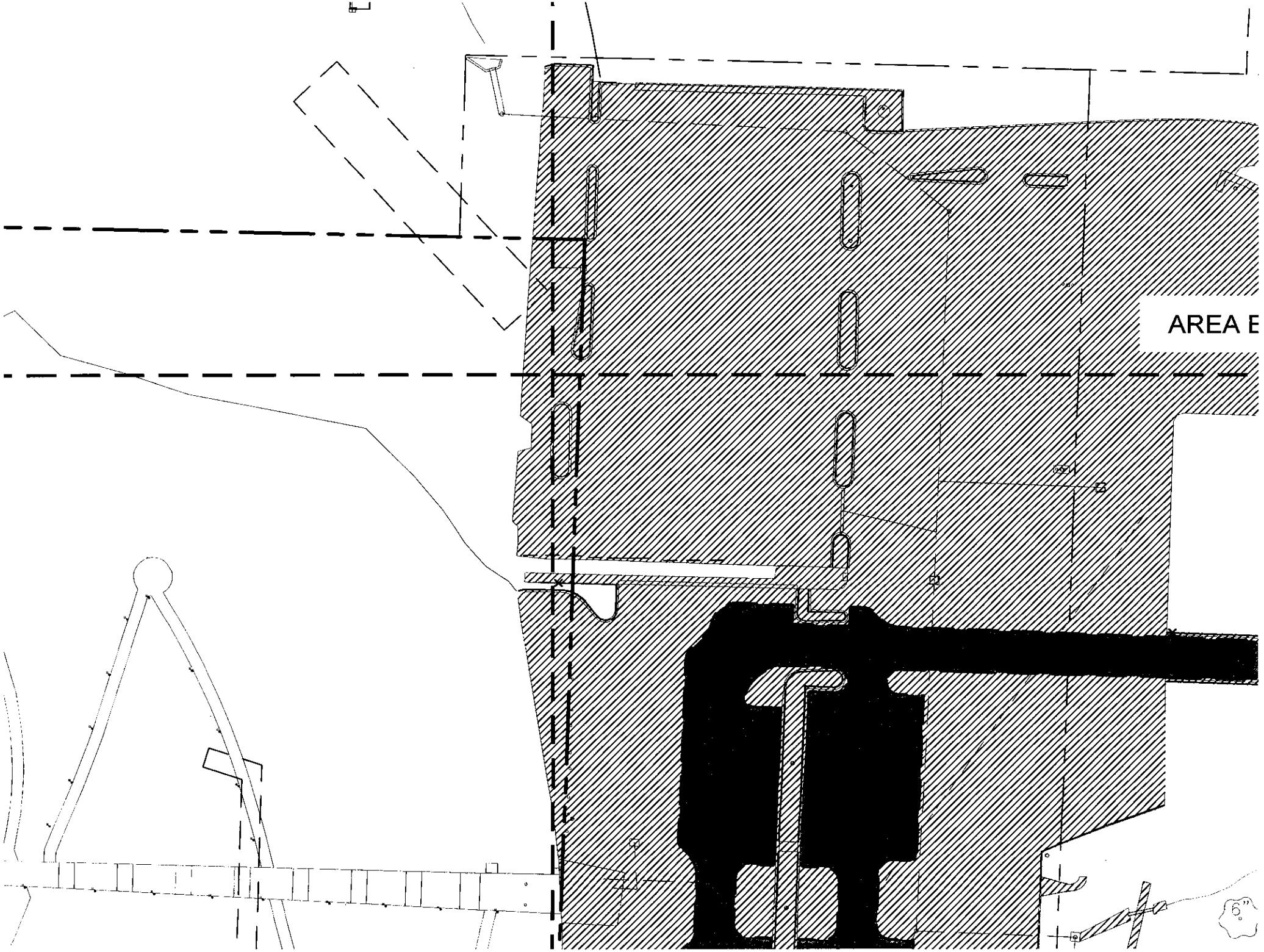
AREA E

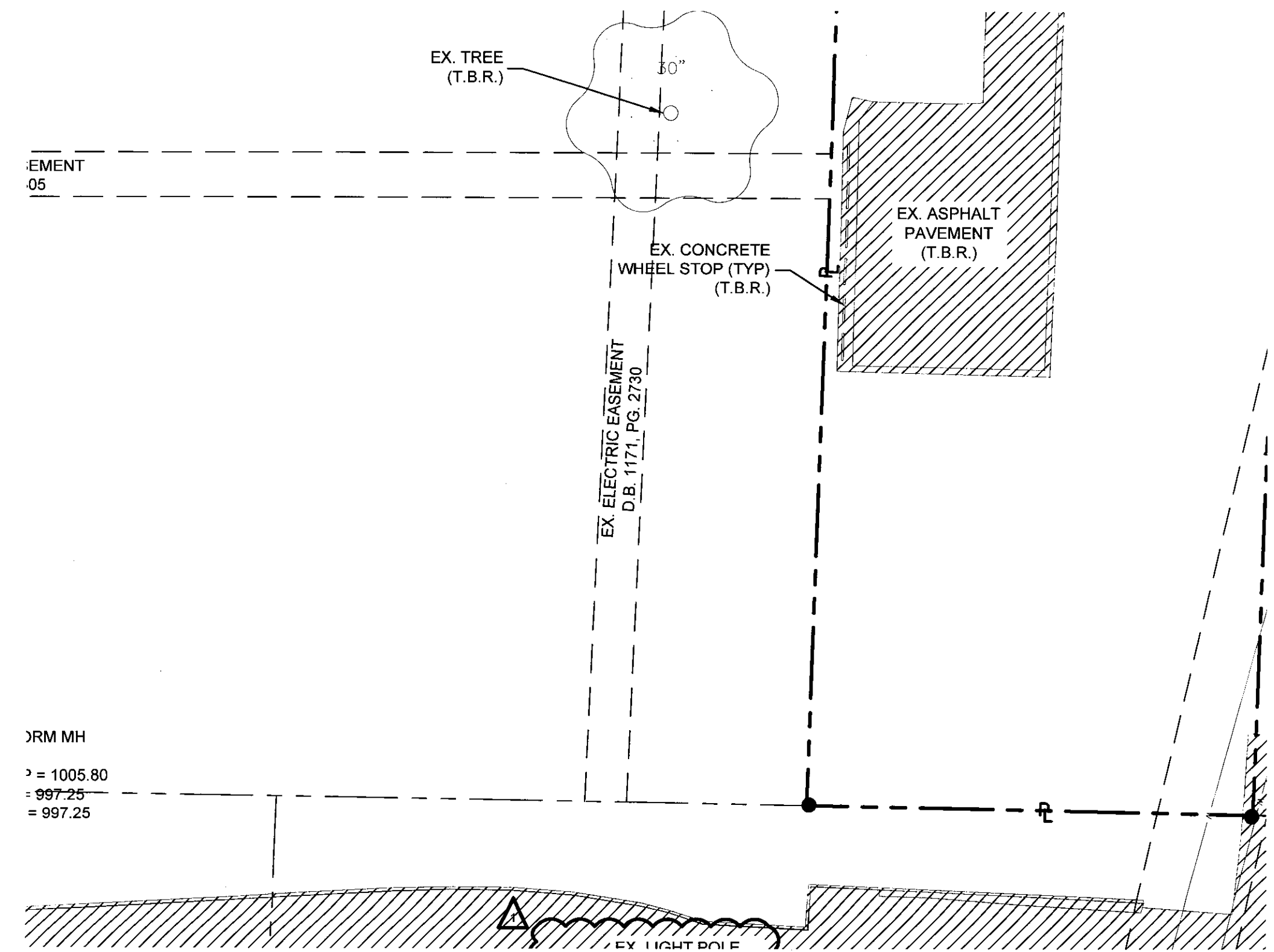
EX. TREE
(T.B.R.)
30"
EMENT
05
EX. CONCRETE
WHEEL STOP (TYP)
(T.B.R.)
EX. ASPHALT
PAVEMENT
(T.B.R.)
EX. ELECTRIC EASEMENT
D.B. 1171, PG. 2730
ORM MH
= 1005.80
= 997.25
= 997.25
EX. LIGHT POLE

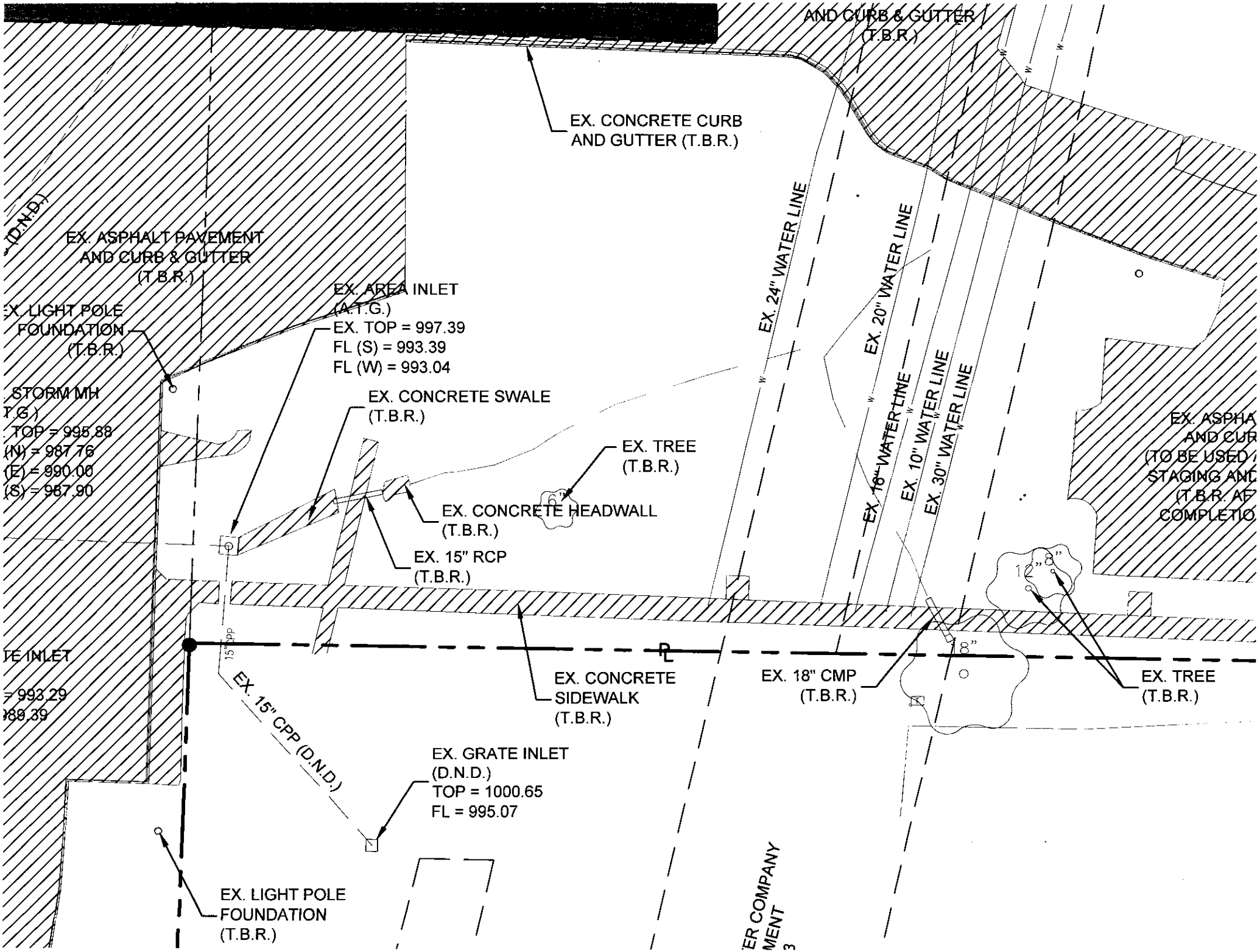
AND CURB & GUTTER
(T.B.R.)
EX. CONCRETE CURB
AND GUTTER (T.B.R.)
EX. ASPHALT PAVEMENT
AND CURB & GUTTER
(T.B.R.)
EX. AREA INLET
(A.T.G.)
EX. TOP = 997.39
FL (S) = 993.39
FL (W) = 993.04
EX. LIGHT POLE
FOUNDATION
(T.B.R.)
EX. CONCRETE SWALE
(T.B.R.)
EX. TREE
(T.B.R.)
EX. CONCRETE HEADWALL
(T.B.R.)
EX. 15" RCP
(T.B.R.)
EX. 24" WATER LINE
EX. 20" WATER LINE
EX. 16" WATER LINE
EX. 10" WATER LINE
EX. 30" WATER LINE
EX. 15" CPP (D.N.D.)
EX. CONCRETE
SIDEWALK
(T.B.R.)
EX. 18" CMP
(T.B.R.)
EX. TREE
(T.B.R.)
EX. GRATE INLET
(D.N.D.)
TOP = 1000.65
FL = 995.07
EX. LIGHT POLE
FOUNDATION
(T.B.R.)

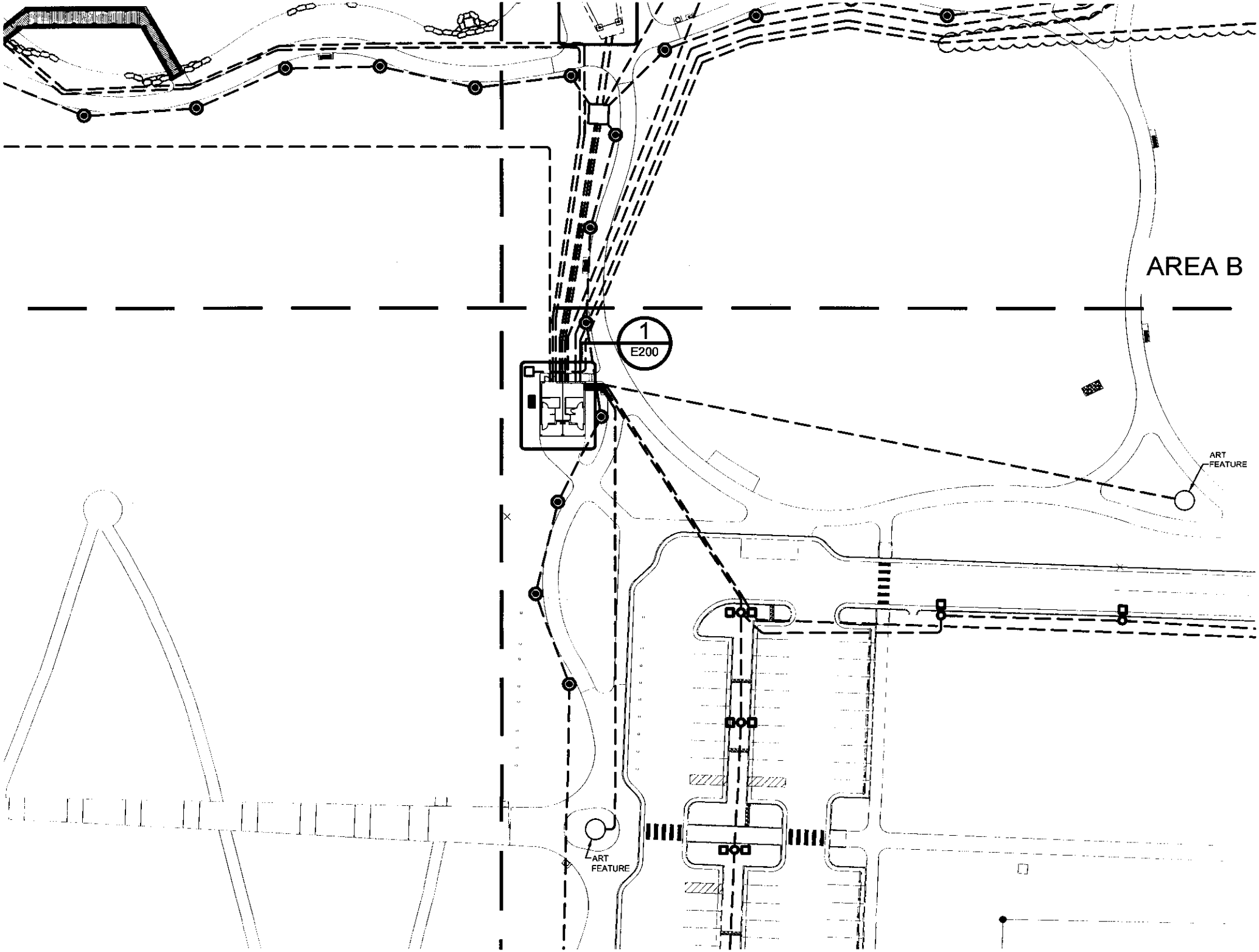
AREA B
1
E200
ART
FEATURE
ART
FEATURE

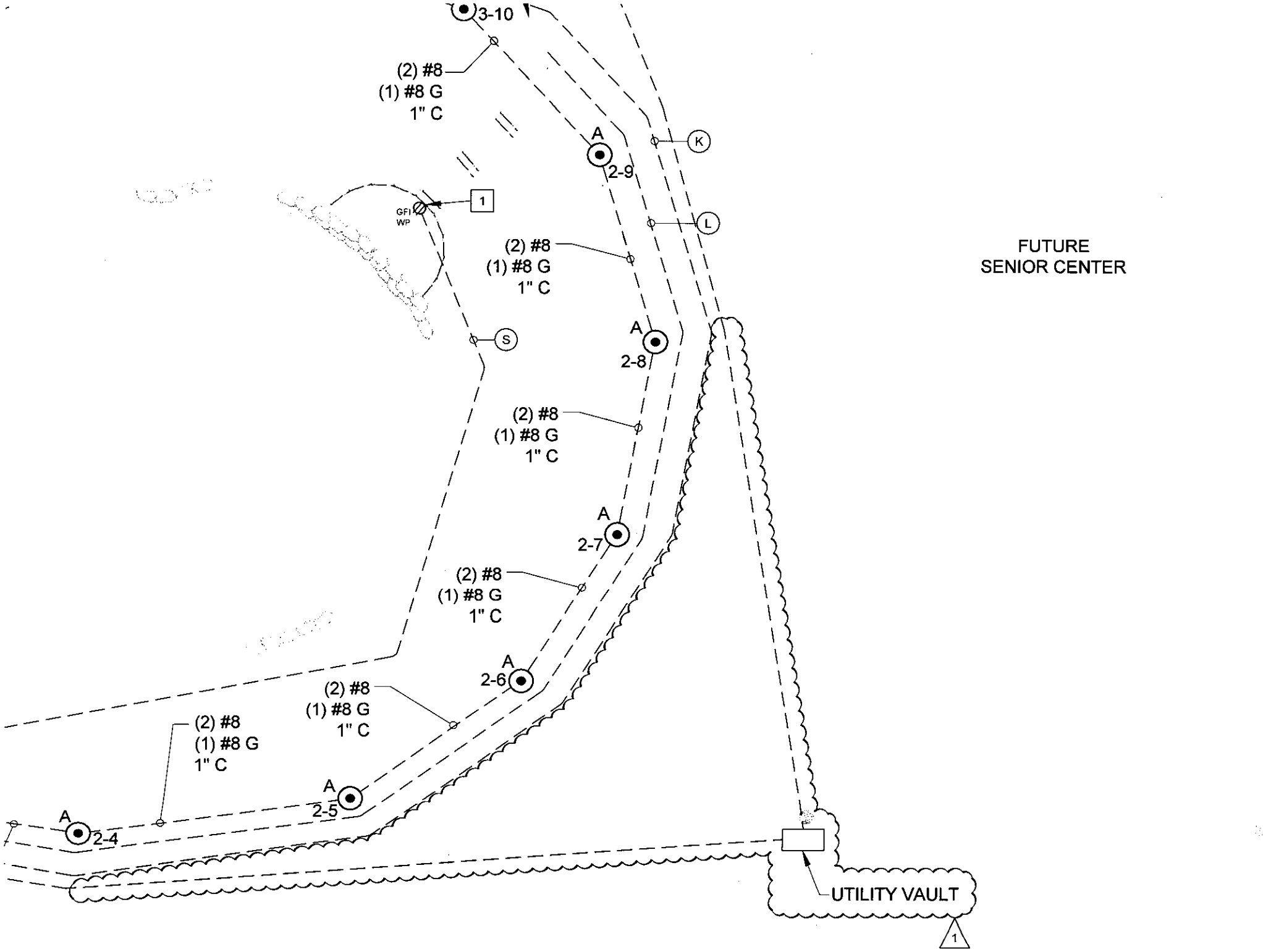
3-10
(2) #8
(1) #8 G
1" C
A
2-9
K
L
1
GFI
WP
(2) #8
(1) #8 G
1" C
FUTURE
SENIOR CENTER
S
A
2-8
(2) #8
(1) #8 G
1" C
A
2-7
(2) #8
(1) #8 G
1" C
A
2-6
(2) #8
(1) #8 G
1" C
(2) #8
(1) #8 G
1" C
A
2-5
A
2-4
UTILITY VAULT
1

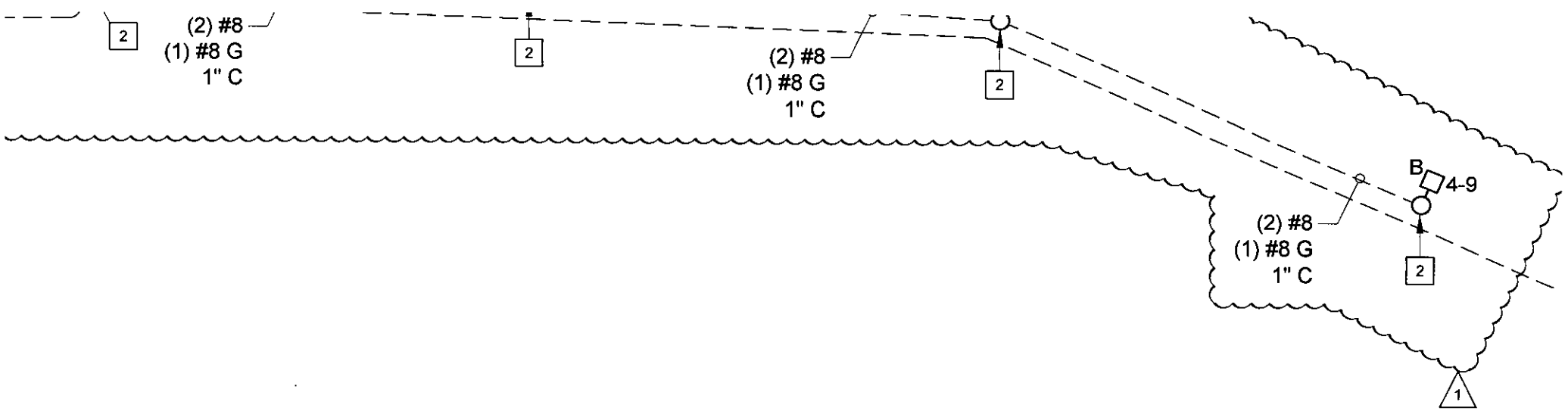
2
(2) #8
(1) #8 G
1" C
2
(2) #8
(1) #8 G
1" C
2
B
4-9
(2) #8
(1) #8 G
1" C
2
1

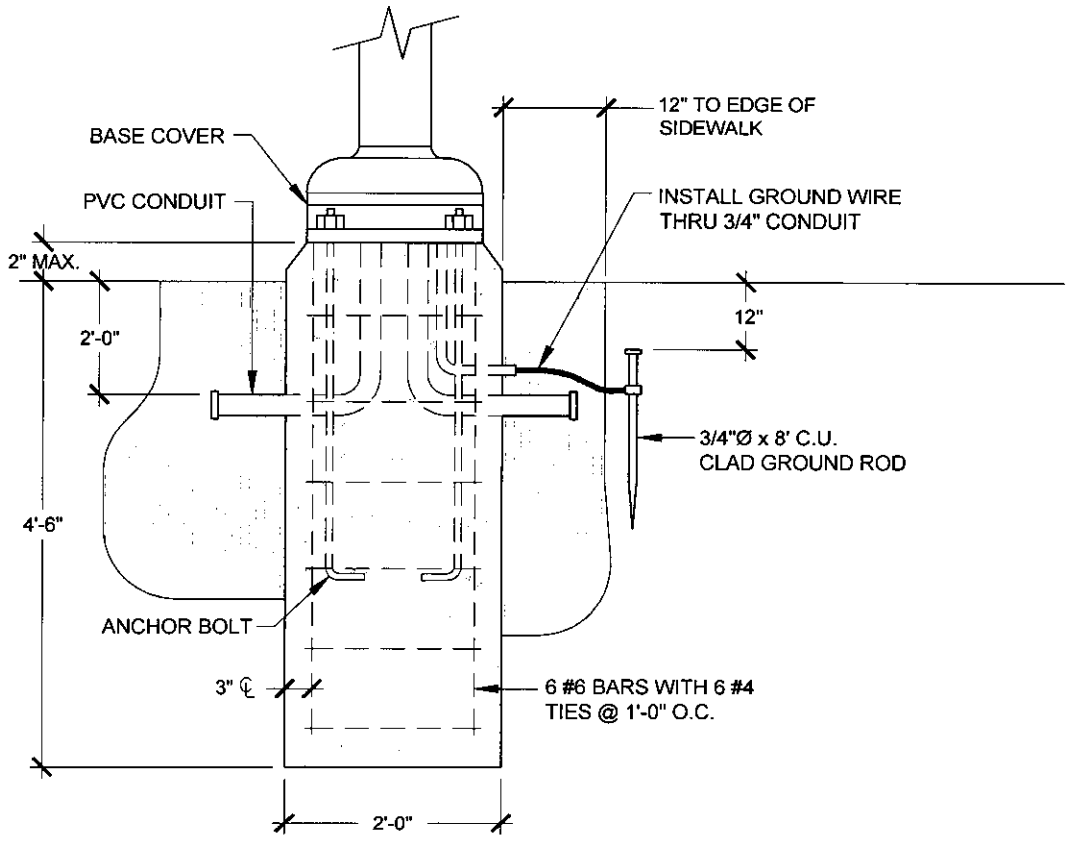

FIXTURE TYPE "A" MOUNTING DETAIL

NO SCALE

GF

NO S

RED PI

D UTILITY
ER
' - 3Ø - 4W

DISCONNECT AND [8] (1)
ENCLOSURE

(1)
' COPPER CAD
JND ROD
LECT. CONTRACTOR)

G. 2" C.

ER 'T-1'

' - 3Ø - 4W.

AM

LIGHTIN

	MARK	FIXTURE		VOLT.	INPUT	LAMP		MOUNTING	
		TYPE	DIFFUSER		WATTS	# & WATTS	TYPE	TYPE	HT.
[6]	A	PEDESTRIAN	ACRYLIC	277	24	1-24	LED	POLE	12'-0"
	B	PARKING LOT		480	486	1-400	MH	POLE	
	C	WALL PACK	ACRYLIC	277	185	1-150	MH	WALL	
	D	INDUSTRIAL	ACRYLIC	277	58	2-F32	T8	SURFACE	
[5]	E	COLUMN UPLIGHT	ACRYLIC	277	18	1-18	LED	PENDANT	
[5]	F	DOWNLIGHT	ACRYLIC	277	29	1-29	LED	PENDANT	

**ELECTRICAL CONTRACTOR IS RESPONSIBLE F

MARK	
A	
B	
C	
D	
E	
F	
G	
H	
[7] I	
[7] J	
[7] K	
[7] L	

SECTION 009113 - **ADDENDA #4**

PART 1 - Addenda

1.1 PROJECT INFORMATION

A. Project Name: Joplin Public Park.

B. Owner: City of Joplin, MO.

C. Owner Project Number: 2015-011.

D. Architect: SWT Design.

E. Architect Project Number: 220288.01.

F. Date of Addendum: August 21, 2015.

1.2 NOTICE TO BIDDERS

A. This Addendum is issued to all registered plan holders pursuant to the Instructions to Bidders and Conditions of the Contract. This Addendum serves to clarify, revise, and supersede information in the Project Manual, Drawings, and previously issued Addenda. Portions of the Addendum affecting the Contract Documents will be incorporated into the Contract by enumeration of the Addendum in the Owner/Contractor Agreement.

B. The Bidder shall acknowledge receipt of this Addendum in the appropriate space on the Bid Form.

C. The date for receipt of bids is unchanged by this Addendum, at same time and location.

1. Bid Date: August 27, 2015.

1.3 ATTACHMENTS

A. This Addendum includes the following attached Documents:
1. Exhibit A: Plan Holder List.
2. Exhibit B: Questions and Answers received since Addendum #3 was issued.

B. This Addendum includes the following attached Sheets, Exhibit C:

1. General Sheet G002, dated August 21, 2015 (reissued).
2. Landscape Sheets L101, L102, L103, dated August 21, 2015 (reissued).

C. This Addendum includes the attached Addendum Drawings, Exhibit D:

1. City Standard Detail, Type C Inlet, to supercede detail on sheet C500.
2. City Standard Detail, Pavement Repair, to supercede detail on sheet C500.

1.4 REVISIONS TO DRAWING SHEETS

A. Sheet G002- Additional Notes and Legends.

1. Revision to Material Legend.

B. Sheet L101- Materials and Notes, Area A.

1. Callout for concrete curb and gutter.

C. Sheet L102- Materials and Notes, Area B.

1. Callout for concrete curb and gutter.

D. Sheet L103- Materials and Notes, Area C.

1. Callouts for concrete curb and gutter, asphalt, wheelstop, and striping.

1.5 CLARIFICATIONS

A. SWPPP, Sheet C600:

1. The contractor, not the City, will be responsible for all documentation required by the City's SWPPP

2. The contractor will be responsible for any and all fees associated with non-compliance of those requirements.

B. Third Party Testing:

1. There will be third party testing as it relates to the construction of the lake and associated compaction.

2. Contractor to provide concrete testing.

C. Substitution Request:

1. Please note, Cameron Bridge Works, LLC is an "approved equal" for the pedestrian bridge.
   a. Design from either approved provider must match design intent provided on sheets L504 and S001.
   b. Contractor must provide signed and sealed shop drawings from either provider during the submittal process for Owner and Landscape Architect approval.

END OF SECTION 009113

EXHIBIT A

PLAN HOLDER LIST

CITY OF JOPLIN MISSOURI

SWT DESIGN

JOPLIN PUBLIC PARK

PLAN HOLDER LIST

August 21, 2015

Responses	Company	Location	Contact Name	Email	Phone Number
1	Play By Design	Tulsa, OK	Kelli Collins	playbydesigninc@gmail.com	918-851-9518
2	Audio Input, LLC	Joplin, MO	Perry Workman	pworkman@audioinput.com	417-782-2569
3	Hunter Knepshield Co.	La Grange, KY	Tom Knepshield	knepsr@gmail.com	502-225-9121
4	Blevins Asphalt Construction Co.	Mt. Vernon, MO	Jeran Cordova	jcordova@blevinsasphalt.com	417-466-3758
5	Bill's Electric, Inc.	Webb City, MO	Misty Youngblood	myoungblood@beijoplin.com	417-624-6660 ext. 239
6	Koppel Fabrication, Inc.	Sweet Springs, MO	Larry Winfrey	larry@koppelfab.com	660-335-4601
7	Crossland Construction Company	Columbus, KS	Tamara Mann	tmann@crosslandconstruction.com	620-429-1414
8	iSqFt*		Matt Knochelman	mknochelman@ISQFT.com	800-364-2059 ext. 7029
9	Tri-State Area Contractors Association	Joplin, MO	Heather Griffith	heather@tristatecontractors.net	417-627-9392
10	Jeff Asbell Excavating and Trucking, Inc.	Carl Junction, MO	Donna Blackmon	dblackmon@jeffasbell.com	
11	Big John's Heavy Equipment	Diamond, MO	Maggie Anderson	manderson@swmotm.com	417-437-0285
12	McCann Concrete Products, Inc.	Dorsey, IL	Debbie Christopher	dchristopher@mccannprecast.com	618-377-3888
13	Joplin Electrical Co., Inc.	Duenweg, MO	Jeff Cartright	jeff@joplinelectric.com	417-623-3425
14	Simply Bright Ideas	St. Charles, MO	Brian Brader	brian@simplybrightideas.com	314-718-1688
15	Wickman Gardens	Springfield, MO	Brian Bennett	brianbennett950@gmail.com	417-880-5236
16	DeWitt and Associates	Springfield, MO	Heath Dawson	hdawson@dewitt-associates.com	417-881-4820
17	Dalton-Killinger Construction Company	Joplin, MO	Mary Lou Halama	marylouhalama@daltonkillinger.com	417-624-0651
18	B&D Yardbuilders, Inc.	Joplin, MO	Lisa Keele	bndboston@cableone.net	417-623-8754
19	APAC Missouri, Inc.	Joplin, MO	David Andrews	david.andrews@apac.com	417-849-0821
20	RE Smith Construction	Joplin, MO	Dave Smith	dave@resmithconst.com	417-623-4545
21	ePlan*	Columbia, MO	Raven Webster	ravenw@eplanbidding.com	573-447-7130
22	Dodge *	IL, IN, KS, MO	Darlene Morman	darlene.morman@construction.com	847-221-2141
23	Branco Enterprises, Inc.	Neosho / Springfield, MO	Patrick Capron	PCAPRON@branco.com	417-451-5250
24	Athco, LLC	Lenexa, KS	Jason Cates	JCates@athcollc.com	913-469-5600
25	Layne Electric	Joplin, MO	Mark Layne	mark@layneelectric.com	417-782-5800
26	Construction Market Data*	Norcross, GA	Robert Canetta	robert.canetta@cmdgroup.com	630-288-7973
27	CorWorth / Restroom Facilities Ldt.	Marble Falls, TX	Shanda Miller	shanda@corworth.com	800-447-6570
28	Mid America Sports Construction	Lees Summit, MO	Nick Roth	nroth@mid-americagolf.com	816-524-0010
29	Emery Sapp & Sons, Inc.	Springfield, MO	Janet Caudillo	Janet.Caudillo@Emerysapp.com	417-833-9915
30	Baxter Farms and Nurseries	St. Louis, MO	Chistopher Ake	Chris@BaxterFarms.com	314-542-9400
31	SFP Landscaping / Native Landscape	St. Louis, MO	Charles Caverly	chuckc@sfplandscapinginc.com	314-544-7918
32	Shade-Guard	St. Louis, MO	Jerre Parsons	jerre@shade-guard.com	314-363-7637
33	Solartonic	Ann Arbor, MI	Brian Tell	brian@solartonic.com	734-418-0696
34	AB Creative	St. Louis, MO	Tony May	tony@abcreative.net	314-478-9160
35	Central Turf and Irrigation	Springfield, MO	Kent Brobst	kbrobst@centraltis.com	417-924-9696
36	Kenney Outdoor Solutions	Lenexa, KS	Korey Your	korey.york@kmcturf.com	913-449-8683
37	Branco Enterprises, Inc.	Neosho / Springfield, MO	Bruce Johnson	bjohnson@branco.com	417-451-5250
38	Wickman Gardens	Springfield, MO	Brian Bennett	brianbennett950@gmail.com	417-880-5236
39	Rooter Local 20	Kansas City			417-413-6600
40	Ashell Excavating and Trucking	Carl Junction, MO	Duane Inartick	dwartick@jeffasbell.com	417-437-0526
41	A-Y-I	Carl Junction, MO	Dan Yates	duates@a-yi.com	417-437-0206
42	RE Smith Construction		Chris Bookstaver	chris@resmithconst.com	417-439-3394
43	Carson-Mitchell		Jason Carson	jason@carson-mitchell.com	417-859-5653
44	Vaughn Dirtwork	Molett, MO	Jacob Vaughn	joulo@sbcglobal.net	417-737-1427
45	Layne Electric		Adam Layne	adam@layneelectric.com	417-782-5800
46	Dalton-Killinger Construction Company		Shane McDaniel	bidfile@daltonkillinger.com	417-624-0651
47	Emery Sapp and So.	Springfield, MO	Chris Orf	chris.orf@emerysapp.com	417-833-9915
48	Atnip Enterprise	Jasper, MO	Michael Ehrson	mikeehrsam@yahoo.com	417-525-4280

49	Paragon	Tulsa, OK	Mike Thedford	miket@paragontulsa.com	918-497-0627
50	Crossland Construction Company		Steve Houser	shouser@crosslandconstruction.com	620-429-1414
51	Southwest Traffic MO	Joplin, MO	Sid Davis	sdavis@joplin.com	417-437-0285
52	Dalton-Killinger Construction Company		Justin Underwood	bidfile@daltonkillinger.com	417-624-0651
53	GOINS Enterprises	Joplin, MO	Jim Thomason	contact@goinsent.com	417-659-6082
54	Fagan Electric	Joplin, MO	David Webb	dwebb@faganelectric.com	417-623-4848
55	Double S Dirt Works		Zac Short	zac.ssdirtworks@windstream.net	417-843-2185
56	JIE	Joplin, MO	Mike Kinmer	mike@joplinelectric.com	414-623-3425
57	Jeff Asbell Excavating and Trucking, Inc.		Rusty Snyder	rsnyder@jeffasbell.com	417-437-1195
58	BEI	Joplin, MO	Dwight Harvey	dharvey@beijoplin.com	417-621-8031
59	All Seasons	Joplin, MO	Bo Jones	jeff@joplinrockyard.com	417-206-0534
60	All Seasons	Joplin, MO	Jeff Coffey	jeff@joplinrockyard.com	417-206-0534
61	Estate Management Services	Willard, MO	Jimmy Rogers	jimmy@lakeexperts.com	417-838-8040
62	RE Smith Construction	Joplin, MO	Dave Smith	dave@resmithconst.com	417-439-4545
63	Houska, Inc.	Foristell, MO	Kevin Hoelscher	kevin@houskainc.com	636-463-2153

EXHIBIT B

QUESTIONS AND ANSWERS RECEIVED SINCE ADDENDUM #3

CITY OF JOPLIN MISSOURI

SWTDESIGN

JOPLIN PUBLIC PARK

ADDENDUM #4

QUESTIONS RECEIVED

1. **Q:** Do we need to give a proposal for a year of maintenance during the warranty period?

   A: No, upon receipt of substantial completion the maintenance is the city's requirement. Contractor is responsible for replacement during the warranty period.

2. **Q:** Do you have a Rock clause for this project? Rock spec says to see the City of Joplin Standards Spec. City Spec talks about both Unclassified, and Rock excavation. So my question is will you pay unit price as on 1.3 B Rock excavation $____ per CY?

   A: Yes

3. **Q:** At the Walk thru on site you said this was a balance site, and the concrete, and the asphalt is to be hauled off site. The dirt can stay on site. I had an outside firm do a dirt take off for this project and his report show a lot of extra dirt. Just checking that you will change the dirt finish grade to make room for this material. This makes a lot of different of the price to stay on site versus to haul it off site.

   A: There is excess cut of approximately 20,000 – 30,000 cubic yards. Placement of rubble-ized fill will not be allowed due to planned site grades. Any material hauled off-site must be disposed of or re-used in accordance with applicable local, state, and federal laws based on the material classification and volume.

4. **Q:** Section 003126 talk's about Hazzard materials. You say it can stay on site. Do we have to have our 40 hour Hazz-Mat training? The current EPA jobs we are bidding say's even the truck drivers now have to be trained. This would make the cost go up.

   A: Hazmat training is not a requirement for all the workers. The contractor should follow instructions listed in section 8.15.1 of 004113.15 General Conditions should they encounter any materials that they believe to be hazardous. Refer to Addendum #3, 1.6, A for additional information regarding soil remediation.

5. **Q:** The Bid plans say not for Construction. Do you anticipate any changes?

   A: No, documents are for bidding purposes and prior to construction a conformance set / construction set of drawings will be issued.

6. **Q:** Does the Wood fence remove on the west side of the parking lot?

   A: Yes, the wood fence is to be removed.

7. **Q:** Are handholes required where empty conduits are traveling long distances for future feeds (eg: art feature)? If so, at what distances are they required?

   A: Provide 12 x 12 hand hole in general vicinity of each future art location.

8. **Q:** Plan sheet E500, street light wiring detail reflects ¾" LFNC inserted into 1" HDPE at the pole base locations?? Is "HDPE, Cable in Duct" required between poles? The mounting details reflect PVC being installed. Need clarification.

   A: As part of the base bid, 1" PVC conduit is to be installed between the poles. Light fixtures, poles, pole bases and cable for the light fixtures shall be installed as an alternate.

9. **Q:** Plan sheet E600 keyed notes are different then the new Alternate schedule.

   A: Refer to addendum #3 for correct alternate bid item numbers.

10. **Q:** 26th street has several areas where existing drives are removed. Can't find anyplace indicating that new curb & gutter will be installed at these voids. Shts D101, D102,L101 & L102

    A: Please see Sheets G002, L101, L102, L103 that were reissued as part of this addendum.

11. **Q:** It calls on the bid form for Unit Price number 25 to have the excess soil moved to the repository. Where is the repository located?

    A: Refer to Jasper County Health Department for additional information.

12. **Q:** Can excess asphalt and concrete also be hauled off to the repository?

    A: Refer to Jasper County Health Department for additional information.

13. **Q:** On the irrigation plans, there is landscaping in all the islands, yet there isn't irrigation at the entrance island or in the bioswale island in the parking lot. Is that intentional? Should irrigation be accounted for in those two areas?

    A: Entry island to have irrigation and island in middle of parking lot will not have irrigation per drawings. Clarification will be provided.

14. **Q:** Please clarify whether the lake fountain should be a 7.5hp or 10hp model.

    A: The Aqua Master fountain should be a 7.5hp model, Crown and Geyser nozzle, with LED lighting. Each fountain should include 200' of cable, reference electrical drawings.

EXHIBIT C

DRAWING SHEETS

MATERIAL LEGEND

1. **STANDARD CONCRETE PAVING**
   4" THICK CONCRETE PAVING, LIGHT BROOM FINISH. EDGES TO BE ¾" TOOLED RADIUS. SAW CUT JOINTS. CONTRACTOR TO COORDINATE LOCATION OF ALL JOINTS WITH LANDSCAPE ARCHITECT. SEE DETAIL 'A'/L500
2. **HEAVY DUTY CONCRETE PAVING**
   6" THICK STANDARD CONCRETE. LIGHT BROOM FINISH. EDGES TO BE ½" TOOLED RADIUS. SAW CUT JOINTS. SEE DETAIL 'D'/L500
3. **SPECIAL CONCRETE PAVING**
   4" THICK COLOR CONDITIONED CONCRETE PAVING W/ EXPOSED AGGREGATE FINISH. SEE SPECIFICATIONS. SEE DETAIL 'A'/L500
4. **CONCRETE STAIRS**
   SEE DETAIL 'E'/L500
5. **NATURAL LIMESTONE LEDGEROCK WALL**
   WEATHERED NATURAL MISSOURI LIMESTONE LEDGEROCK
   SIZE: SEE SPECIFICATIONS
6. **LAKE EDGE BOULDER WALL**
   WEATHERED NATURAL MISSOURI LIMESTONE BOULDERS WITH MOSS AND LICHEN
   SIZE: SEE SPECIFICATIONS
7. **LIMESTONE LEDGEROCK SPILLWAY**
   WEATHERED NATURAL MISSOURI LIMESTONE LEDGEROCK. SEE SHEET L503 AND SPECIFICATIONS FOR ADDITIONAL INFORMATION
8. **RETRACTABLE VEHICLE BOLLARD**
   BY RELIANCE FOUNDARY
   SEE DETAILS ON SHEET L502
9. **ENTRY SIGNAGE**
   SEE DETAILS ON SHEET 'D'/L506
10. **BENCHES**
    BY LANDSCAPE FORMS
    SEE DETAILS ON SHEET 'A'/L502 AND 'A'/L507 FOR LAYOUT
11. **BIKE RACK**
    BY LANDSCAPE FORMS
    SEE DETAILS ON SHEET 'B'/L502
12. **WASTE RECEPTACLE**
    BY LANDSCAPE FORMS
    SEE DETAILS ON SHEET 'D'/L502 AND 'A'/L507
13. **LIGHT POLE**
    SEE DETAILS ON SHEET 'E'/L502
14. **FOUNTAIN**
    AQUA MASTER - MASTER SERIES
    7.5 - 10 HP, LED LIGHTING
    SEE DETAILS ON SHEET 'G'/L502
15. **LARGE SHELTER**
    BY POLYGON
    SEE SHEET L530
16. **RESTROOM**
    BY PUBLIC RESTROOM COMPANY
    SEE SHEET L520
17. **SMALL SHELTER**
    BY POLYGON
    SEE SHEET L540
18. **PEDESTRIAN BRIDGE**
    BY CONTECH
    SEE SHEET L503
19. **COUNCIL RING**
    SEE SHEET L560
20. **DRY STREAM**
    SEE SHEET L503
21. **FOREBAY**
    SEE SHEET L503
22. **BOARDWALK**
    BY PERMATRAK
    SEE SHEET L550
23. **DRINKING FOUNTAIN**
    BY MOST DEPENDABLE FOUNTAINS
    SEE SHEET 'D'/L502
24. **CHIMNEY SWIFT TOWER**
    SEE SHEET L502

SEE SHEET L600 FOR REFERENCE IMAGERY OF SITE ELEMENTS

PLANTING LEGEND

- CANOPY TREE
- EVERGREEN TREE
- FLOWERING TREE
- SHRUBS
- PERENNIALS

LEGEND

- PROJECT BOUNDARY
- EXISTING UTILITY
- PROPOSED UTILITY
- + TC 600.75 / + BC 600.25 — TOP OF CURB ELEVATION / BOTTOM OF CURB ELEVATION
- + TW 600.75 / + BW 595.25 — TOP OF WALL ELEVATION / BOTTOM OF WALL ELEVATION
- + 600.75 — SPOT ELEVATION
- 600 — CONTOURS
- NORTHING / EASTING COORDINATE POINT
- EJ — EXPANSION JOINTS
- PA — PLANTING AREA

SOILS LEGEND

- PLANTING SOIL A (ORNAMENTAL PLANTING AREAS)
- PLANTING SOIL B (MEADOW AREAS)
- PLANTING SOIL C (BIOFILTRATION AREAS) SEE SHEET C402

SEE DETAIL 'B' ON SHEET L501 AND SPECIFICATIONS FOR ADDITIONAL SOIL PREPARATION INFORMATION

1

25. **CONCRETE CURB AND GUTTER**
    SEE DETAIL ON SHEET C500
26. **2" ASPHALT MILL AND OVERLAY**
    SEE DETAIL ON SHEET C500
27. **ASPHALT PAVEMENT**
    SEE DETAIL ON SHEET C500
28. **CONCRETE WHEELSTOP**
    SEE DETAIL ON SHEET C500
29. **WHITE PAVEMENT STRIPE**
    4" WIDTH FOR PARKING STALLS
    CROSSWALKS PER CITY STANDARDS
30. **BLUE PAVEMENT STRIPE**
    4" WIDTH FOR HANDICAP PARKING STALLS

Call Before you DIG
TOLL FREE
1-800-344-7483
MISSOURI ONE-CALL SYSTEM INC
MODOT (314) 340-4100

NOTIFY LANDSCAPE ARCHITECT IMMEDIATELY IN EVENTS OF DISCREPANCIES, OMISSIONS, AND/OR CONFLICTS IN THE DRAWINGS OR SPECIFICATIONS. THE CONTRACTOR IS NOT AUTHORIZED TO SCALE THE DRAWINGS. ALL QUESTIONS IN REFERENCE TO CONTRACT DOCUMENTS SHALL BE IMMEDIATELY DIRECTED TO THE LANDSCAPE ARCHITECT

08-03-2015 - BID DOCUMENTS / PERMIT SET

CITY OF JOPLIN MISSOURI

Joplin Public Park

Landscape Architect
SWT DESIGN
7722 Big Bend Blvd
St. Louis, MO 63119
314.644.5700

Civil Engineer
Horner & Shifrin
401 S. 18th St. STE. 400
St. Louis, MO 63103
314.531.4321

Geotechnical Engineer
Palmerton & Parrish, Inc.
4168 W. Kearney
Springfield, MO 65803
417.864.6004

Irrigation Consultant
Landtech Design
8420 Zionsville Rd.
Indianapolis, IN 46268
314.541.2779

FOR BIDDING PURPOSE ONLY
NOT FOR CONSTRUCTION

Jay Wohlschlaeger
Landscape Architect
MO # LA-2009014766

STATE OF MISSOURI · JOHN WILLIAM WOHLSCHLAEGER · NUMBER LA-2009014766 · LANDSCAPE ARCHITECT · 08-03-2015

SWT Design, Inc.
Missouri State Certificate of Authority #2006002904

KEY PLAN

Issuances

No	Description	Date
01	Bid Documents / Permit Set	08/03/15

Revisions

No	Description	Date
01	Addendum #4	09/21/15

SWT No. 20288.01.000

Drawn: FSD
Reviewed: JJW

Sheet Title
ADDITIONAL NOTES AND LEGENDS

Number
G002

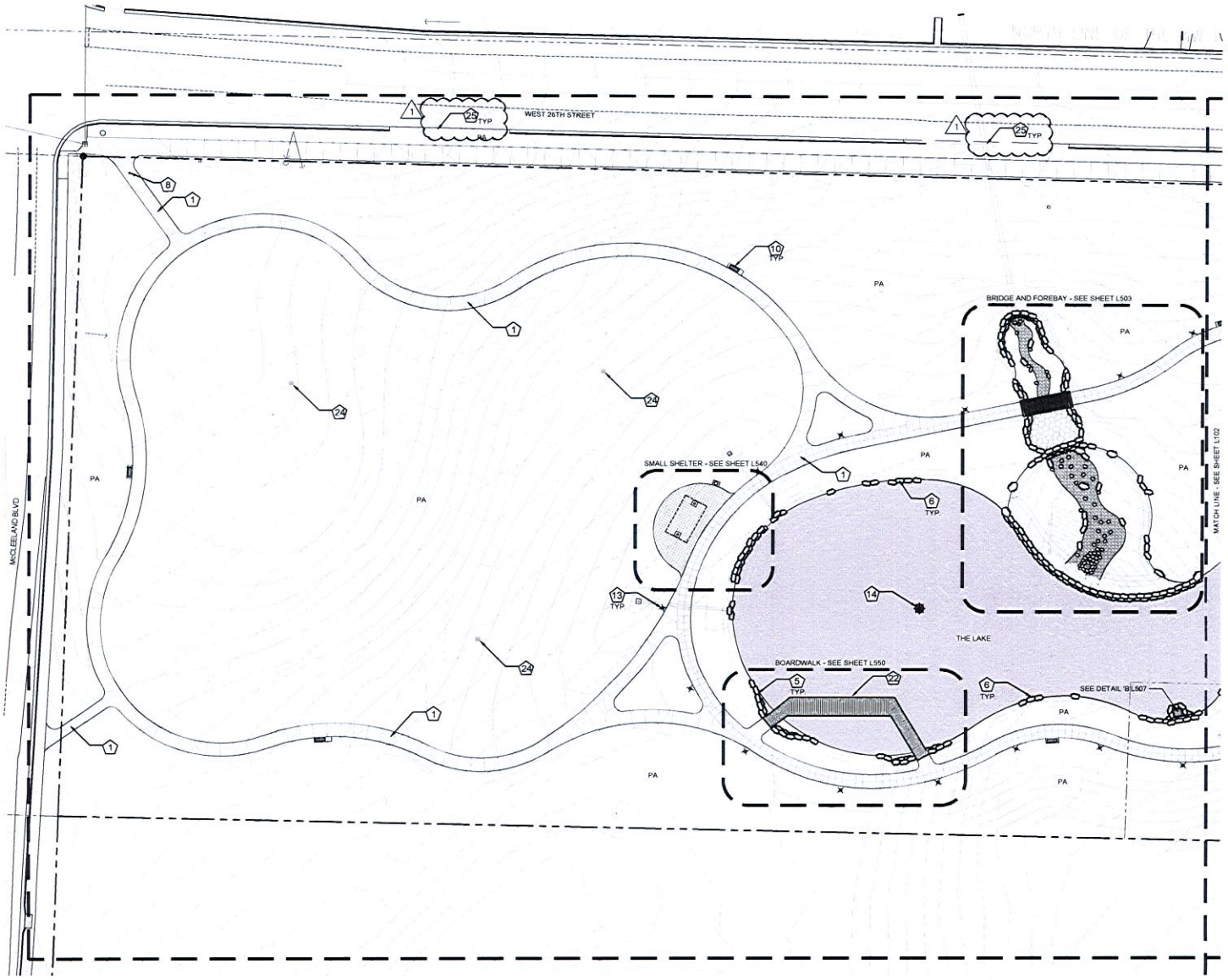

A MATERIAL PLAN - AREA A
SCALE: 1" = 30'

0' 15' 30' 60'

MATERIAL LEGEND

1. STANDARD CONCRETE PAVING
2. HEAVY DUTY CONCRETE PAVING
3. SPECIAL CONCRETE PAVING
4. CONCRETE STAIRS
5. NATURAL LIMESTONE BOULDER WALL
6. LAKE EDGE BOULDER WALL
7. LIMESTONE BOULDER SPILLWAY
8. RETRACTABLE VEHICLE BOLLARD
9. ENTRY SIGNAGE
10. BENCHES
11. BIKE RACK
12. WASTE RECEPTACLE
13. LIGHT POLE
14. FOUNTAIN
15. LARGE SHELTER
16. RESTROOM
17. SMALL SHELTER
18. PEDESTRIAN BRIDGE
19. COUNCIL RING
20. DRY STREAM
21. FOREBAY
22. BOARDWALK
23. DRINKING FOUNTAIN
24. CHIMNEY SWIFT TOWER
25. CONCRETE CURB AND GUTTER
26. 2" ASPHALT MILL AND OVERLAY
27. ASPHALT PAVEMENT
28. CONCRETE WHEELSTOP
29. WHITE PAVEMENT STRIPPING
30. BLUE PAVEMENT STRIPPING

ALL NOTES AND LEGENDS ARE LOCATED ON SHEETS G001 AND G002.

CITY OF JOPLIN MISSOURI

Joplin Public Park

Landscape Architect
SWT DESIGN
7722 Big Bend Blvd.
St. Louis, MO 63119
314.644.5700

Civil Engineer
Horner & Shifrin
401 S. 18th St. STE. 400
St. Louis, MO 63103
314.531.4321

Geotechnical Engineer
Palmerton & Parrish, Inc.
4168 W. Kearney
Springfield, MO 65803
417.864.6004

Irrigation Consultant
Landtech Design
8420 Zionsville Rd.
Indianapolis, IN 46268
314.541.2779

FOR BIDDING PURPOSE ONLY
NOT FOR CONSTRUCTION

Jay Wohlschlaeger
Landscape Architect
MO # LA-2009014766

STATE OF MISSOURI
JOHN WILLIAM WOHLSCHLAEGER
NUMBER LA-2009014766
LANDSCAPE ARCHITECT
08-03-2015

SWT Design, Inc.
Missouri State Certificate of Authority #2006002904

KEY PLAN

Issuances

No.	Description	Date
01	Bid Documents / Permit Set	08/03/15

Revisions

No.	Description	Date
01	Addendum #4	08/21/15

SWT No. 20288.01.000

Drawn FSD | Reviewed JWW

Sheet Title
MATERIALS AND NOTES - AREA A

Number
L101

08.03.2015 - BID DOCUMENTS / PERMIT SET

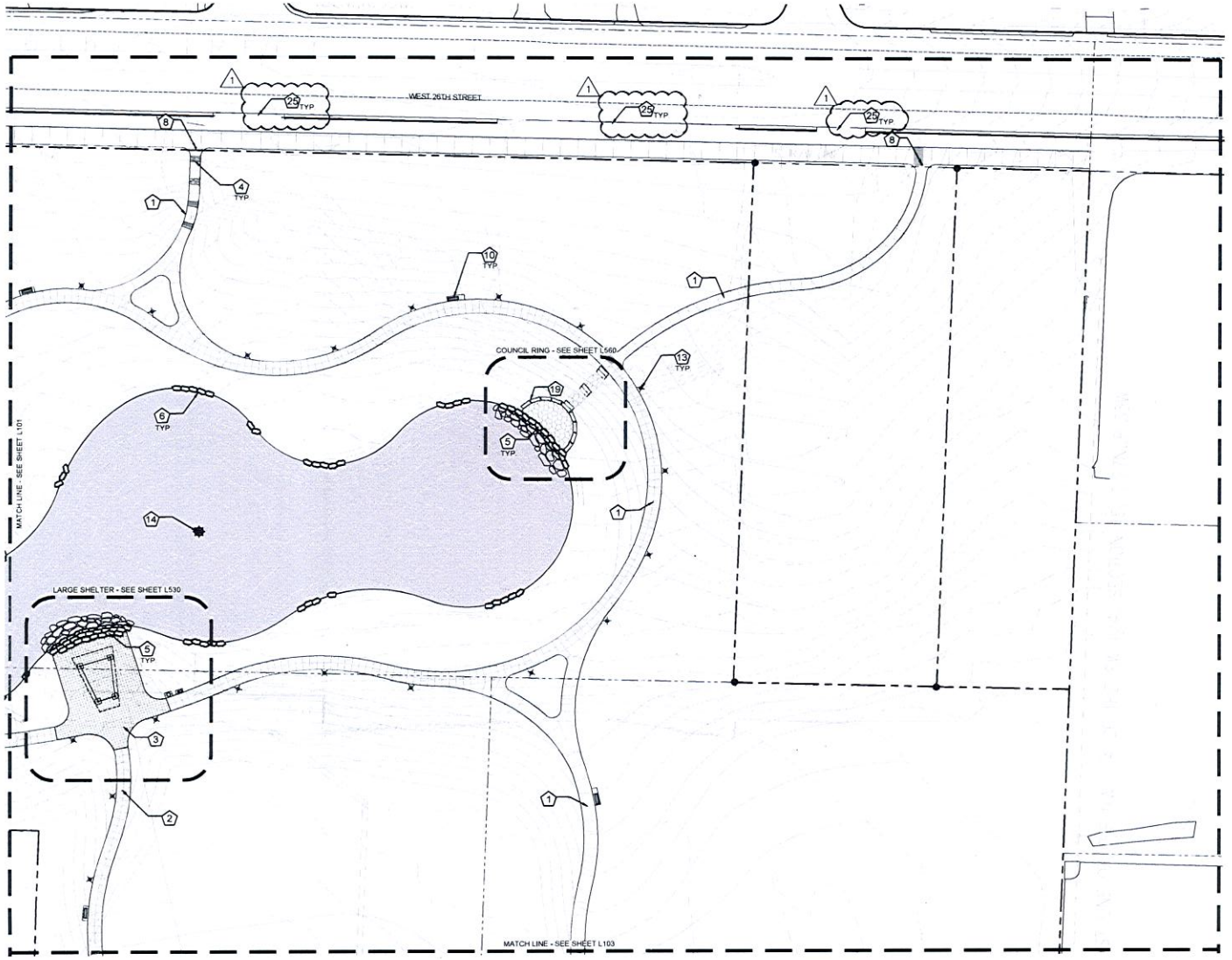

A MATERIAL PLAN - AREA B
SCALE: 1" = 30'

0' 15' 30' 60'

MATERIAL LEGEND

1. STANDARD CONCRETE PAVING
2. HEAVY DUTY CONCRETE PAVING
3. SPECIAL CONCRETE PAVING
4. CONCRETE STAIRS
5. NATURAL LIMESTONE BOULDER WALL
6. LAKE EDGE BOULDER WALL
7. LIMESTONE BOULDER SPILLWAY
8. RETRACTABLE VEHICLE BOLLARD
9. ENTRY SIGNAGE
10. BENCHES
11. BIKE RACK
12. WASTE RECEPTACLE
13. LIGHT POLE
14. FOUNTAIN
15. LARGE SHELTER
16. RESTROOM
17. SMALL SHELTER
18. PEDESTRIAN BRIDGE
19. COUNCIL RING
20. DRY STREAM
21. FOREBAY
22. BOARDWALK
23. DRINKING FOUNTAIN
24. CHIMNEY SWIFT TOWER
25. CONCRETE CURB AND GUTTER
26. 2" ASPHALT MILL AND OVERLAY
27. ASPHALT PAVEMENT
28. CONCRETE WHEELSTOP
29. WHITE PAVEMENT STRIPPING
30. BLUE PAVEMENT STRIPPING

ALL NOTES AND LEGENDS ARE LOCATED ON SHEETS G001 AND G002.

CITY OF JOPLIN MISSOURI

Joplin Public Park

Landscape Architect
SWT DESIGN
7722 Big Bend Blvd.
St. Louis, MO 63119
314.644.5700

Civil Engineer
Horner & Shifrin
401 S. 18th St, STE. 400
St. Louis, MO 63103
314.531.4321

Geotechnical Engineer
Palmerton & Parrish, Inc.
4168 W. Kearney
Springfield, MO 65803
417.864.6004

Irrigation Consultant
Landtech Design
8420 Zionsville Rd.
Indianapolis, IN 46268
314.541.2779

FOR BIDDING PURPOSE ONLY
NOT FOR CONSTRUCTION

Jay Wohlschlaeger
Landscape Architect
MO # LA-2009014766

STATE OF MISSOURI
JOHN WILLIAM WOHLSCHLAEGER
NUMBER LA-2009014766
LANDSCAPE ARCHITECT
06-03-2015

SWT Design, Inc.
Missouri State Certificate of Authority #2006002904

KEY PLAN

Issuances

No.	Description	Date
01	Bid Documents / Permit Set	06/03/15

Revisions

No.	Description	Date
01	Addendum #4	08/21/15

SWT No. 20288.01.000

Drawn FSD | Reviewed JAW

Sheet Title
MATERIALS AND NOTES - AREA B

Number
L102

06-03-2015 - BID DOCUMENTS / PERMIT SET

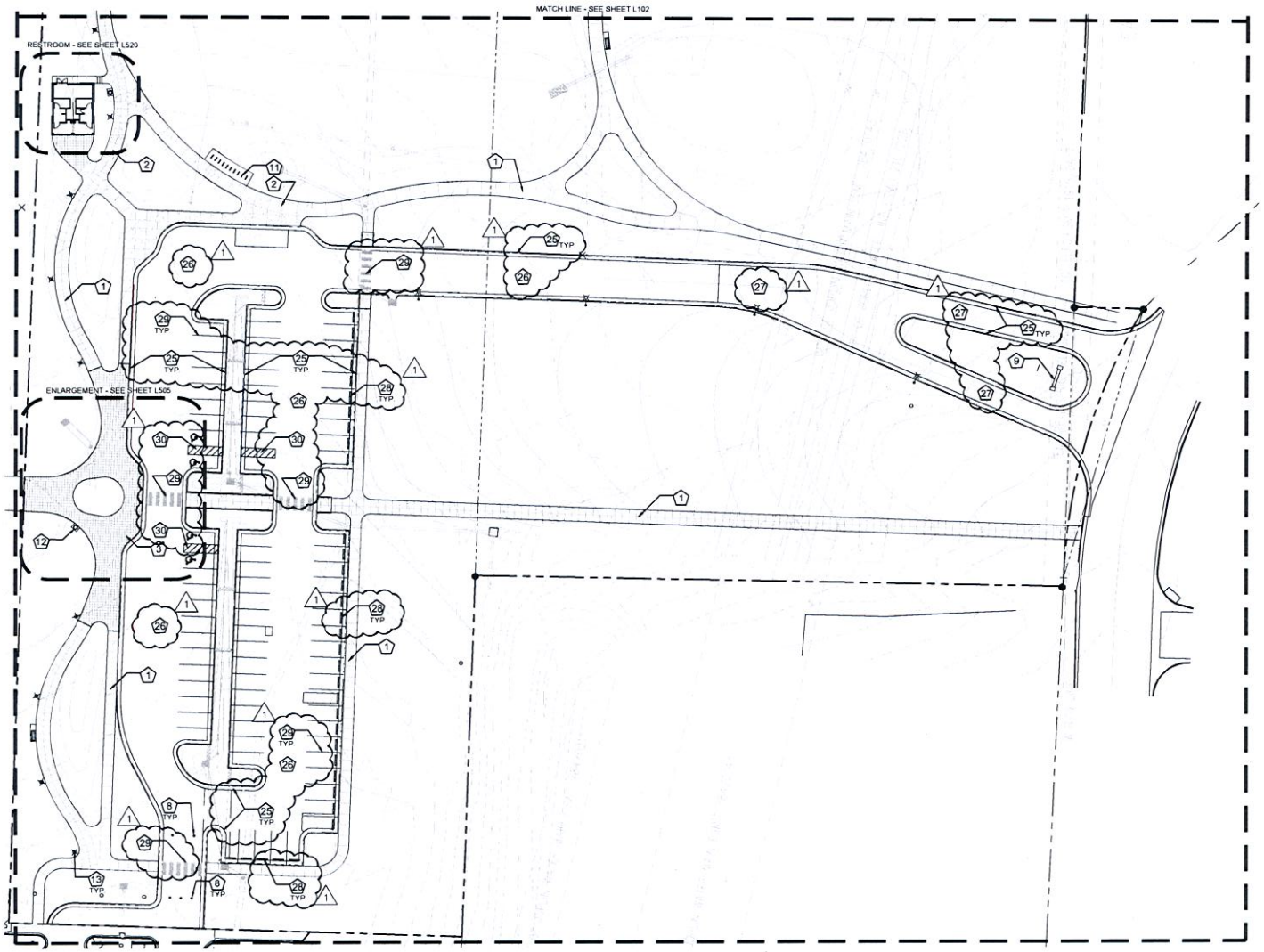

A MATERIAL PLAN - AREA C
SCALE 1" = 30'

0' 15' 30' 60'

MATERIAL LEGEND

1. STANDARD CONCRETE PAVING
2. HEAVY DUTY CONCRETE PAVING
3. SPECIAL CONCRETE PAVING
4. CONCRETE STAIRS
5. NATURAL LIMESTONE BOULDER WALL
6. LAKE EDGE BOULDER WALL
7. LIMESTONE BOULDER SPILLWAY
8. RETRACTABLE VEHICLE BOLLARD
9. ENTRY SIGNAGE
10. BENCHES
11. BIKE RACK
12. WASTE RECEPTACLE
13. LIGHT POLE
14. FOUNTAIN
15. LARGE SHELTER
16. RESTROOM
17. SMALL SHELTER
18. PEDESTRIAN BRIDGE
19. COUNCIL RING
20. DRY STREAM
21. FOREBAY
22. BOARDWALK
23. DRINKING FOUNTAIN
24. CHIMNEY SWIFT TOWER
25. CONCRETE CURB AND GUTTER
26. 2" ASPHALT MILL AND OVERLAY
27. ASPHALT PAVEMENT
28. CONCRETE WHEELSTOP
29. WHITE PAVEMENT STRIPPING
30. BLUE PAVEMENT STRIPPING

ALL NOTES AND LEGENDS ARE LOCATED ON SHEETS G001 AND G002.

CITY OF JOPLIN MISSOURI

Joplin Public Park

Landscape Architect:
SWT DESIGN
7722 Big Bend Blvd.
St. Louis, MO 63119
314.644.5700

Civil Engineer:
Horner & Shifrin
401 S. 18th St. STE. 400
St. Louis, MO 63103
314.531.4321

Geotechnical Engineer:
Palmerton & Parrish, Inc.
4168 W. Kearney
Springfield, MO 65803
417.864.6004

Irrigation Consultant
Landtech Design
8420 Zionsville Rd.
Indianapolis, IN 46268
314.541.2779

FOR BIDDING PURPOSE ONLY
NOT FOR CONSTRUCTION

Jay Wohlschlaeger
Landscape Architect
MO # LA-2009014766

STATE OF MISSOURI
JAY WILLIAM WOHLSCHLAEGER
NUMBER LA-2009014766
LANDSCAPE ARCHITECT
08-03-2015

SWT Design, Inc.
Missouri State Certificate of Authority #2006002904

KEY PLAN

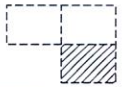

Issuances

No.	Description	Date
01	Bid Documents / Permit Set	08/03/15

Revisions

No.	Description	Date
01	Addendum #4	08/21/15

SWT No. 20288.01.000

Drawn FSD | Reviewed JJW

Sheet Title
MATERIALS AND NOTES - AREA C

Number
L103

08-03-2015 - BID DOCUMENTS / PERMIT SET

EXHIBIT D

REVISED CITY STANDARD DETAILS

USE ½" EXPANSION JOINT MATERIAL BETWEEN SEPARATE CONCRETE POURS

SIDEWALK WIDTHS WILL VARY DEPENDING ON DESIGN WIDTH

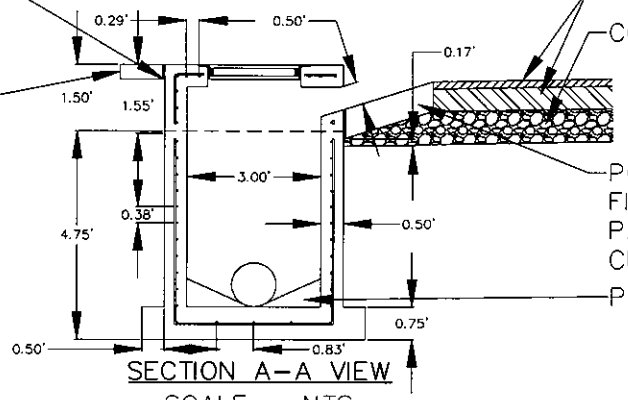

PAVEMENT SECTIONS

COMPACTED SUBBASE

POURED SEPARATELY FROM BOX FINISHED EDGE TO MEET EXISTING PAVEMENT GRADE TO BOTTOM OF CURB INLET OPENING

POURED INVERT

SECTION A–A VIEW

SCALE = NTS

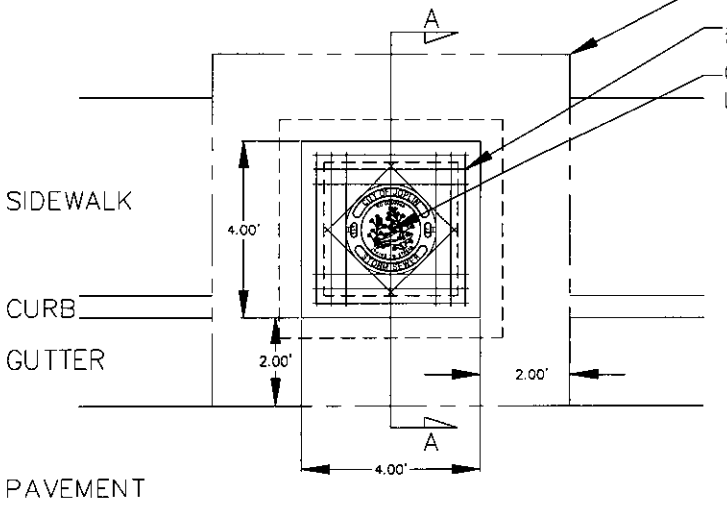

BID ITEM LIMIT

#4 BARS @ 4" O.C.

CITY OF JOPLIN STANDARD LID USE DEETER #2018–A



TYPE 'C' CURB INLET

PLAN VIEW

SCALE = NTS

DEETER #2018–A

PLAN VIEW

SCALE = NTS

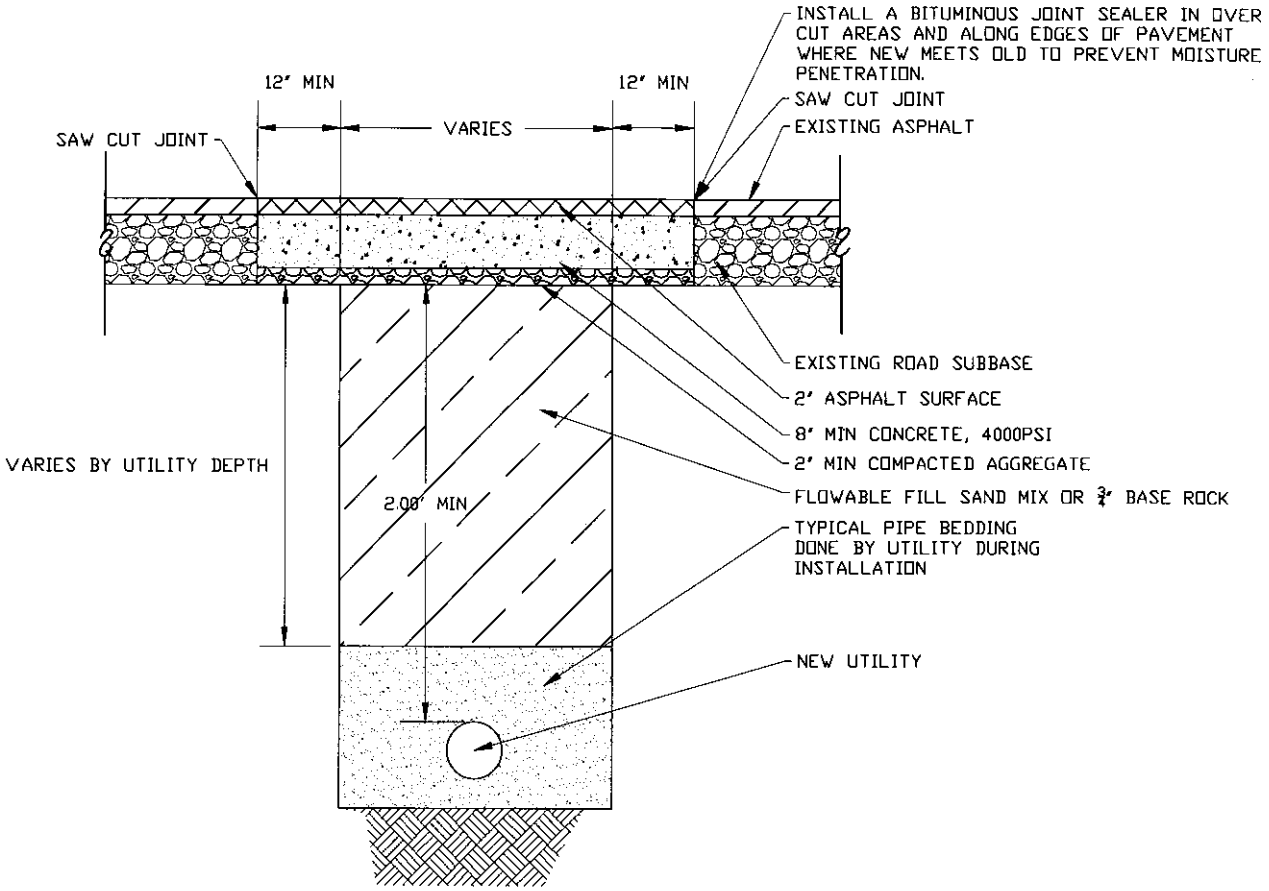

BITUMINOUS PAVEMENT PATCHING

N.T.S.

The City Of Joplin
Department of Public Works
Office of Engineering
602 S. Main St., Joplin, MO 64801
Phone: 417-624-0820 Fax: 417-625-4738

PAVEMENT REPAIR OF CITY STREETS

TYPICAL DETAIL

Detail Number:	TBD
Designed By: STAFF	Approved By: HEATHERLY
Drafted By: BL	Date: 2014
Scale:	NTS
	SHEET 1

concrete subcontractor. Notes on sheets L530, L540, and Specification Section 012300 – Alternates define base bid versus alternates.

D. **[Q:]** Why is division 9000 "Traffic Signals" included in Appendix A? **[A:]** Appendix A references the entire set of City Standard Specifications. Some sections are not relevant to the project.

E. Sealed bids will be accepted at Joplin City Hall, 602 S. Main Street, 4th Floor; Joplin, MO 64801 until 2pm, CST, August 27, 2015 and read aloud. All required documentation included with bid manual is due at this time.

END OF SECTION 009113

SECTION 009113 - **ADDENDA #5**

PART 1 - Addenda

1.1 PROJECT INFORMATION

A. Project Name: Joplin Public Park.

B. Owner: City of Joplin, MO.

C. Owner Project Number: 2015-011.

D. Architect: SWT Design.

E. Architect Project Number: 220288.01.

F. Date of Addendum: August 25, 2015.

1.2 NOTICE TO BIDDERS

A. This Addendum is issued to all registered plan holders pursuant to the Instructions to Bidders and Conditions of the Contract. This Addendum serves to clarify, revise, and supersede information in the Project Manual, Drawings, and previously issued Addenda. Portions of the Addendum affecting the Contract Documents will be incorporated into the Contract by enumeration of the Addendum in the Owner/Contractor Agreement.

B. The Bidder shall acknowledge receipt of this Addendum in the appropriate space on the Bid Form.

C. The date for receipt of bids is unchanged by this Addendum, at same time and location.

1. Bid Date: August 27, 2015.

1.3 ATTACHMENTS

A. This Addendum includes no attachments.

1.4 REVISIONS TO DIVISIONS 02 - 49 SPECIFICATION SECTIONS

A. Specification Section 321316 Decorative Concrete Paving, (not reissued).

1. Paragraph 2.3, A1: grey portland cement is allowed in lieu of white portland cement.

2. Paragraph 2.3, B: Bussen Quary is baseline for design, aggregate can be from others.

END OF SECTION 009113

EXHIBIT C

ILLUSTRATIVE SITE PLAN | FULL OPTION



COUNCIL BILL NO. 2015-371 ORDINANCE NO.

AN ORDINANCE the City of Joplin to enter into an Acquisition of Real Estate Agreement with Dr. Gary L. Selby and Teresa L. Selby for property associated with the development of the new City of Joplin public park at 26th Street; authorizing the City Manager to execute said Agreement in substantially similar form; and containing an emergency clause.

BE IT ORDAINED BY THE COUNCIL OF THE CITY OF JOPLIN, MISSOURI, as follows:

Section 1. That the City of Joplin to enter into an Acquisition of Real Estate Agreement with Dr. Gary L. Selby and Teresa L. Selby for property associated with the development of the new City of Joplin public park at 26th Street in the amount not to exceed Ninety-Six Thousand and 00/100 Dollars ($96,000.00), along with associated closing costs, attached hereto as Exhibit A,

Section 2. That the City Manager is hereby authorized to execute said Agreement, or in substantially similar form, for and on behalf of the City of Joplin.

Section 3. That this Ordinance dealing with a public improvement, is an emergency within the meaning of Section 2.12(6) of the Home Rule Charter of the City of Joplin, Missouri, and, the same shall be in full force and effect immediately from and after its adoption and approval. Specifically, this Ordinance requires the City of Joplin to initiate public improvement planning and construction of the park.

PASSED BY THE COUNCIL OF THE CITY OF JOPLIN, MISSOURI, this _____ day of _____, 2015, by a vote of _____.

_____
Michael L. Seibert, Mayor

ATTEST:

_____
Barbara L. Hogelin, City Clerk

APPROVED AS TO FORM:

_____
Peter C. Edwards, City Attorney

City of **JOPLIN** City Council Agenda Item

Requested Council Meeting Date: October 5, 2015

Item: Council Bill No. 2015-371 authorizing and approving an Agreement between the City of Joplin and Gary Selby and Teresa Selby.

ORIGINATING DEPARTMENT: Planning & Community Development
ATTACHMENTS: Exhibit A – Real Estate Agreement;
Exhibit B - Property Location Map.
Council Bill No. 2015- 371

PLANNING & CD DIRECTOR: Troy Bolander
FINANCE DIRECTOR: Leslie Haase
CITY ATTORNEY: Peter C. Edwards
CITY MANAGER: Sam L. Anselm

INTRODUCTION:

This Council Bill authorizes the City of Joplin to enter into an Acquisition of Real Estate Agreement with Dr. Gary L. Selby and Teresa L. Selby for property at 1300 W. 26th Street, Joplin, Missouri in Jasper County (Census tract 27900-0107.00) in association with the City of Joplin public park on 26th Street and McClelland.

DISCUSSION:

This Council Bill authorizes the City of Joplin to enter into an Acquisition of Real Estate Agreement with Dr. Gary L. Selby and Teresa L. Selby for property associated with the development of the new City of Joplin public park at 26th Street; authorizing the City Manager to execute said Agreement in substantially similar form; and containing an emergency clause.

The property will utilize City Council approved CDBG-DR2 funding in the amount of $96,000, with the price being determined by a completed fair market appraisal. As part of the agreement funding will also cover associated costs and fees to close.

RECOMMENDATION:

Staff recommends this Council Bill be approved on an emergency basis. That this Ordinance dealing with a public improvement, is an emergency within the meaning of Section 2.12(6) of the Home Rule Charter of the City of Joplin, Missouri, and, the same shall be in full force and effect immediately from and after its adoption and approval. Specifically, this Ordinance requires the City of Joplin to initiate public improvement planning and construction of the park.

EXHIBIT A

AGREEMENT

THIS AGREEMENT, made and entered into this _____ day of_____, 20____ , by the parties identified above.

WITNESSETH: That whereas, the Contractor has become the lowest responsible bidder for furnishing the supervision, labor, tools, equipment, materials and supplies and for constructing the following City improvements:

JOPLIN PUBLIC PARK & 2015-011

The City and Contractor agree to the following:

1. Manner and Time for Completion. The Contractor will furnish all supervision, labor, tools, equipment, materials and supplies necessary to perform, and to perform said work at Contractor's own expense in accordance with the contract documents and any applicable City ordinances and state and federal laws within **196** calendar days from the date Contractor is ordered to proceed, which order shall be issued by the Director of Public Works within 30 days after the date of this contract.

2. Prevailing Wages. All labor utilized in the construction of the aforementioned improvements shall be paid a wage of no less than the "prevailing hourly rate of wages" for work of a similar character in this locality, as established and amended at any time by the Department of Labor and Industrial Relations of the State of Missouri or by the U.S. Secretary of Labor in accordance with the Federal Davis-Bacon Act (Title 40 U.S.C. Chapter 31, subchapter IV), whichever is higher. At any time the contractor is found to not have paid prevailing wages, the contractor shall forfeit as a penalty to the city one hundred dollars for each underpaid worker employed, for each calendar day, or portion thereof such worker is paid less than the said stipulated rates for any work done under this contract.

3. Insurance Requirements. Without limiting any of the other obligations or liabilities of the Contractor, the Contractor shall secure and maintain at its own cost and expense, throughout the duration of this Contract and until the work is completed and accepted by the City of Joplin, insurance of such types and in such amounts as may be necessary to protect it and the interests of the City of Joplin against all hazards or risks of loss as hereunder specified or which may arise out of the performance of the Contract Documents. The form and limits of such insurance, together with the underwriter thereof in each case, are subject to approval by the City of Joplin. Regardless of such approval, it shall be the responsibility of the contractor to maintain adequate insurance coverage at all times during the term of the Contract. Failure of the Contractor to maintain coverage shall not relieve it of any contractual responsibility or obligation or liability in general or under the Contract Documents.

The certificates of insurance, including evidence of the required endorsements hereunder or the policies, shall be filed with the City within ten (10) days after the date of the receipt of Notice of Award of the Contract to the Contractor and prior to the start of work. All insurance policies shall require that the

insurance company in question provide thirty (30) days written notice prior to modification or cancellation of such insurance. Such notices shall be mailed, certified mail, return receipt requested, to:

City of Joplin - Public Works, 602 S. Main Street, Joplin, MO 64801

Such policies shall name the City as an additional insured, with limits of liability not less than the sovereign immunity limits for Missouri public entities calculated by the Missouri Department of Insurance as of January 1 each calendar year and published annually in the Missouri Register pursuant to Section 537.610, RSMo. (See, http://insurance.mo.gov/industry/sovimmunity.php)

As of January 1, 2015, the minimum coverage for the insurance referred to herein shall be as set out below:

a. **Workers' Compensation….**Statutory coverage per RSMo 287.010 et seq.

Employer's Liability……. $1,000,000.00

b. **Commercial General Liability Insurance**, including coverage for Premises, Operations, Products and Completed Operations, Contractual Liability, Broad Form Property Damage, Independent Contractors, Explosion, Collapse, and Underground Property Damage and endorsed for blasting if blasting required. Such coverage shall apply to bodily injury and property damage on an "Occurrence Form Basis" with limits of at least Two Million Seven Hundred Twenty-Seven Thousand Four Hundred Eighty-Nine and no/100 Dollars ($2,727,489.00) for all claims arising out of a single accident or occurrence and at least Four Hundred Nine Thousand One Hundred Twenty-Three and no/100 Dollars ($409,123.00) with respect to injuries and/or death of any one person in a single occurrence and an amount not less than at least $1,000,000 for all claims to property arising out of a single occurrence and at least $100,000 to any one owner with respect to damages to property. Contractor agrees that the proceeds of such insurance policy shall first be used to pay any award, damages, costs, and/or attorneys' fees incurred by or assessed against City, its employees, officers and agents, before payment of any award, damages, costs or attorneys' fees of Contractor, its employees, officers or agents. Contractor agrees to cause its insurer to name City as an additional insured on such insurance policy, including the City as an additional insured for coverage under its products-completed operations hazard, and said policy shall be primary and noncontributory.

c. **Automobile Liability Insurance** covering bodily injury and property damage for owned, non-owned and hired vehicles, with limits of at least Two Million Seven Hundred Twenty-Seven Thousand Four Hundred Eighty-Nine and no/100 Dollars ($2,727,489.00) for all claims arising out of a single accident or occurrence and at least Four Hundred Nine Thousand One Hundred Twenty-Three and no/100 Dollars ($409,123.00) with respect to injuries and/or death of any one person in a single accident or occurrence.

d. **Owner's and Contractor's Protective Liability Insurance** to protect the City, its agents, servants and employees from claims which may arise from the performance of this Contract, with limits of at least Two Million Seven Hundred Twenty-Seven Thousand Four Hundred Eighty-Nine and no/100 Dollars ($2,727,489.00) for all claims arising out of a single accident or occurrence and at least Four Hundred Nine Thousand One Hundred Twenty-Three and no/100 Dollars ($409,123.00) with respect to injuries and/or death of any one person in a single accident or occurrence.

The Owner's and Contractor's Protective Liability Insurance must:

(1) Be a separate policy with the named insured being: The City of Joplin, and
(2) Contain an endorsement that disclaims coverage for any claim barred by the doctrines of sovereign immunity or official immunity, except attorney's fees and other litigation costs incurred in defending a claim. Nothing contained in this policy (or this endorsement thereto) shall constitute any waiver of whatever kind of these defenses or sovereign immunity or official immunity for any monetary amount whatsoever.

e. **Builders Risk Insurance** for contracts involving unoccupied structures. The Contractor shall secure All Risk Builder's Risk Insurance. Unless specifically authorized by the City, the amount of such insurance shall not be less than the total contract price.

f. **Subcontracts**. In case any or all of this work is sublet, the Contractor shall require the subcontractor to procure and maintain all insurance required in subparagraphs (a), (b) and (c) hereof and in like amounts. Contractor shall require any and all subcontractors with whom it enters into a contract to perform work on this project to protect the City of Joplin through insurance against applicable hazards or risks and shall, upon request of the City, provide evidence of such insurance.

g. **Notice**. The Contractor and/or subcontractor shall furnish the City prior to beginning the work, the policy as specified in subparagraph (d), and satisfactory proof of carriage of all the insurance required by this contract, with the provision that policies shall not be canceled, modified or non-renewed without thirty (30) days written notice to the City of Joplin.

h. **Legislative or Judicial Changes.** In the event the scope or extent of the City's tort liability as a governmental entity as described in Section 537.600 through 537.650 RSMo is broadened or increased during the term of this agreement by legislative or judicial action, the City may require Contractor, upon 10 days written notice, to execute a contract addendum whereby the Contractor agrees to provide, at a price not exceeding Contractor's actual increased premium cost, additional liability insurance coverage as the City may require to protect the City from increased tort liability exposure as the result of such legislative or judicial action. Any such additional insurance coverage shall be evidenced by an appropriate certificate of insurance and shall take effect within the time set forth in the addendum.

4. Performance, Labor, and Materials Payment Bond: The Contractor shall furnish a Performance Bond and a Labor and Materials Payment Bond with surety approved by the City and on the forms approved by the City, each bond shall be in the amount of $**4,031,000.00** (full amount of contract) conditioned upon the full and faithful performance of all major terms and conditions of this contract and payment of all labor and material suppliers. It is further mutually agreed between the parties hereto that if at any time after the execution of this agreement and the surety bond(s) hereto attached for its faithful performance and payment of labor and material suppliers, the City shall deem the surety or sureties upon such bond(s) to be unsatisfactory, or if, for any reason, such bond(s) ceases to be adequate to cover the performance of the work, the Contractor shall, at its expense, within five (5) days after the receipt of notice from the City to do so, furnish an additional bond or bonds, in such form and amount, and with such surety or sureties as shall be satisfactory to the City. In such event no further payment to the Contractor shall be deemed to be due under this contract until such new or additional security for the faithful performance of the work and the payment of labor and material suppliers shall be furnished in a manner and form satisfactory to the City. The corporate surety on any performance or payment bond must be licensed by the State of Missouri and if the required bond exceeds $25,000.00 must be listed in United States Treasury Circular 570.

5. Contractor's responsibility for subcontractors. The Contractor shall be as fully responsible to the City for the acts and omissions of its subcontractors, and of persons either directly or indirectly employed by them, as Contractor is for the acts and omissions of persons it directly employs. Contractor shall cause appropriate provisions to be inserted in all subcontracts relating to this work, to bind all subcontractors to Contractor by all the terms herein set forth, and insofar as applicable to the work of subcontractors and to give Contractor the same power regarding termination of any subcontract as the City may exercise over Contractor under any provisions of this contract. Nothing contained in this contract shall create any contractual relation between the subcontractor and the City or between any subcontractors.

6. General Independent Contractor Clause. This agreement does not create an employee/employer relationship between the parties. It is the parties' intention that the Contractor will be an independent contractor and not the City's employee for all purposes, including, but not limited to, the application of the Fair Labor Standards Act minimum wage and overtime payments, Federal Insurance Contribution Act, the Social Security Act, the Federal Unemployment Tax Act, the provisions of the

Internal Revenue Code, Missouri Revenue and Taxation laws, Missouri Workers' Compensation and Unemployment Insurance laws. The Contractor will retain sole and absolute discretion in the judgment of the manner and means of carrying out the Contractor's activities and responsibilities hereunder. The Contractor agrees that it is a separate and independent enterprise from the public employer, that it has a full opportunity to find other business, that it has made its own investment in its business, and that it will utilize a high level of skill necessary to perform the work. This agreement shall not be construed as creating any joint employment relationship between the Contractor and the City, and the City will not be liable for any obligation incurred by the Contractor, including but not limited to unpaid minimum wages and/or overtime premiums.

7. Liquidated Damages. Time of completion of work by the Contractor is of the essence. Should Contractor, or in the case of default, the surety, fail to complete the work within the time specified in the contract, or within such extra time as may be allowed in accordance with City of Joplin Standard Specifications, Division 0000, General Requirements and Provisions, Section 0400.19, Contractor (or surety) shall be liable to the City in the amount of $**500.00** per day for each and every calendar day that the work does not achieve Substantial Completion, and be liable to the City in the amount of $**1,000.00** per day for each and every calendar day the work does not achieve Final Completion after the time allowed for completion, as liquidated damages, and not as a penalty, it being stipulated that actual damages to the City and the public arising from Contractor's failure to timely complete the work would be difficult, if not impossible, to ascertain. The amount assessed as liquidated damages may be withheld from any moneys otherwise due to Contractor from the City.

8. Termination. The City reserves the right to terminate this contract by giving at least five (5) days prior written notice to the Contractor, without prejudice to any other rights or remedies of the City should the Contractor be adjudged a bankrupt, or if Contractor should make a general assignment for the benefit of its creditors, or if a receiver should be appointed for Contractor or for any of its property, or if Contractor should persistently or repeatedly refuse or fail to supply enough properly skilled workmen or proper material, or if Contractor should refuse or fail to make prompt payment to any person supplying labor or materials for the work under the contract, or persistently disregard instructions of the City or fail to observe or perform any provisions of the contract.

9. City's Right to Proceed. In the event this contract is terminated pursuant to Paragraph 8, then the City may take over the work and prosecute the same to completion, by contract or otherwise, and Contractor and its sureties shall be liable to the City for any costs over the amount of this contract thereby occasioned by the City. In any such case, the City may take possession of, and utilize in completing the work, such materials, appliances and structures as may be on the work site and are necessary for completion of the work. The foregoing provisions are in addition to, and not in limitation of, the rights of the City under any other provisions of the contract, city ordinances, and state and federal laws.

10. Termination for Convenience of City. The City shall have the right at any time by written notice to Contractor to terminate and cancel this contract, without cause, for the convenience of the City, and Contractor shall immediately stop work. In such event City shall not be liable to Contractor except for payment for actual work performed prior to such notice in an amount proportionate to the completed contract price. Anticipatory profits and consequential damages shall not be recoverable by Contractor.

11. Guards and Lights. The Contractor agrees that during the performance of said work, adequate barricades, guards and warning signs, lights or devices consistent with the requirements contained in the Manual on Uniform Traffic Control Devices shall be provided by Contractor during construction.

12. Liability and Indemnity.

a. In no event shall the City be liable to the Contractor for special, indirect, or consequential damages, except those caused by the City's gross negligence or willful or wanton misconduct arising out of or in any way connected with a breach of this contract. The maximum liability of the City shall be limited to the amount of money to be paid or received by the City under this contract. The Contractor shall defend, indemnify and save harmless the City, its elected or appointed officials, agents and employees from and

against any and all liability, suits, damages, costs (including attorney fees), losses, outlays and expenses from claims in any manner caused by, or allegedly caused by, or arising out of, or connected with, this contract, or the work or any subcontract thereunder (the Contractor hereby assuming full responsibility for relations with subcontractors), including, but not limited to, claims for personal injuries, death, property damage, or for damages from the award of this contract to Contractor, notwithstanding any possible negligence, whether sole or concurrent, on the part of the City, its officials, agents and employees.

b. The Contractor shall indemnify and hold the City harmless from all wages or overtime compensation due any employees in rendering services pursuant to this agreement or any subcontract, including payment of reasonable attorneys' fees and costs in the defense of any claim made under the Fair Labor Standards Act, the Missouri Prevailing Wage Law or any other federal or state law.

c. The indemnification obligations of Contractor hereunder shall not be limited by any limitations as to the amount or type of damages, compensation or benefits payable by or for the Contractor, under any federal or state law, to any person asserting the claim against City, its elected or appointed officials, agents and employees, for which indemnification is sought.

d. The indemnification obligations herein shall not negate, abridge or reduce in any way any additional indemnification rights of the City, its elected or appointed officials, agents and employees, which are otherwise available under statute, or in law or equity.

e. Contractor affirms that it has had the opportunity to recover the costs of the liability insurance required in this agreement in its contract price. Contractor's obligation under this agreement to defend, indemnify, and hold harmless any person from that person's own negligence or wrongdoing is limited to the coverage and limits of the applicable insurance required of the Contractor under this agreement.

f. The Contractor shall indemnify and hold the City harmless for any penalties, fines, fees or costs, including costs of defense, which are charged or assessed by any Federal, state or local agency including, but not limited to, Environmental Protection Agency or Department of Natural Resources.

13. Payment for Labor and Materials. The Contractor agrees and binds itself to pay for all labor done, and for all the materials used in the construction of the work to be completed pursuant to this contract.

14. Payment. The City will pay the Contractor in accordance with the rate set forth in the contract documents on file in the Public Works Department and by this reference made a part hereof, which shall constitute full and complete compensation for the Contractor's work provided hereunder. The total costs for Contractor's services under this Agreement shall not exceed Four Million Thirty One Thousand Dollars ($4,031,000.00). Such compensation will be paid in progress payments (less five (5) percent retainage), as established by the City, subject to receipt of a requisition for payment and a statement of work provided by the Contractor and agreement by both the City, its Project Architect and the Contractor that the Contractor has fully performed the work to be paid for in such progress payments in conformance with the contract. If the City or the architect or engineer determines that a higher rate of retainage is required to ensure performance of the contract, the City may withhold up to ten (10) percent retainage until the work is fully completed and accepted by the City.

15. Contract Documents. The contract documents shall consist of the following:

a. This Contract
b. RFP #2015-011
c. All Change Orders
d. Bid Plans and Specifications
e. City of Joplin Standard Specifications (11-11-2014 Revised Edition)
f. Special Conditions & Provisions

g. Proposal
h. Statement of Bidder's Qualifications
i. Acknowledgment
j. Performance Bond
k. Payment and Material Bond
l. Instructions to Bidders
m. Non-collusion Affidavit
n. Notice to Proceed

Notice to Contractors: This contract, together with the other documents enumerated in this paragraph, forms the contract between the parties. These documents are as fully a part of the contract as if attached hereto or repeated herein. The Contractor agrees to perform all of the work described in the contract documents and to comply with the terms and conditions defined therein for a total sum of Four Million Thirty One Thousand & 00/100 dollars ($4,031,000.00), said amount being subject to any approved addenda or change order.

16. Subsurface Conditions. Contractor agrees that information contained in the published reports and public actions of the Missouri Division of Geology and Land Survey shall be conclusive and binding upon the Contractor as to what subsurface conditions at the job site are reasonably anticipated or reasonably foreseeable. Contractor acknowledges and agrees that it shall not be entitled to any adjustment in the Contract Sum or Contract Times for any concealed condition of any nature, including but not limited to unknown physical conditions of an unusual nature which differ materially from those ordinarily found to exist and generally recognized as inherent in construction activities of the character provided for in the Contract Documents, in addition to the information contained in the published reports and public actions of the Missouri Division of Geology and Land Survey. Contractor recognizes that it has assumed the risks of concealed conditions and is being compensated for assuming these risks.

17. Flood Disaster Protection: This contract is subject to the requirements of the Flood Disaster Protection Act of 1973 (P.L.93-234). Nothing included as a part of this contract is approved for acquisition or construction purposes as defined under Section 3(a) of said Act, for use in an area identified by the Secretary of HUD as having special flood hazards which is located in a community not then in compliance with the requirements for participation in the National Flood Insurance Program pursuant to Section 201(d) of said Act; and the use of any assistance provided under this contract for such acquisition for construction in such identified areas in communities then participating in the National Flood Insurance Program shall be subject to the mandatory purchase of flood insurance requirements or Section 102(a) of said Act. Any contract or agreement for the sale, lease, or other transfer of land acquired, cleared or improved with assistance provided under this Contract shall contain, if such land is located in an area identified by the Secretary as having special flood hazards and in which the sale of flood insurance has been made available under the National Flood Insurance Act of 1968, as amended, 42 U.S.C. 4001 et seq., provisions obligating the transferee and its successors or assigns to obtain and maintain, during the ownership of such land, such flood insurance as required with respect to financial assistance for acquisition or construction purposes under Section 102(a) of Flood Disaster Protection Act of 1973.

18. Environmental Compliance (24 CFR 85.36(i)(12)): The Contractor must comply with all applicable standards, orders, or requirements issued under Section 306 of the Clean Air Act (42 USC 1857 (H)), Section 508 of the Clean Water Act (33 USC 1368), Executive Order 11738, and Environmental Protection Agency regulations (40 CFR, Part 15) prohibiting the use of facilities included on the EPA List of Violating Facilities.

19. Conflict of Interest. In accepting this contract, Contractor certifies that no member or officer of its firm or corporation is an officer or employee of the City of Joplin, Missouri, or any of its boards or agencies, and further that no officer or employee of the City has any financial interest, direct or indirect, in this contract. All applicable federal regulations and provisions of R.S.Mo. Section 105.450 et seq. shall not be violated.

20. Assignment. The Contractor shall not assign any interest in this contract, and shall not transfer any interest in the same (whether by assignment or novation), without prior written consent of the City thereto, provided, however, that claims for money due or to become due to the Contractor from the City under this Contract may be assigned to a bank, trust company, or other financial institution without such approval. Notice of such assignment or transfer shall be furnished in writing promptly to the City and the bond surety. Any such assignment is expressly subject to all rights and remedies of the City under this agreement, including the right to change or delete activities from the Contract or to terminate the same as provided herein, and no such assignment shall require the City to give any notice to any such assignee of any actions which the City may take under this agreement.

21. Anti-Lobbying: The Contractor shall ensure that no federal appropriated funds have been paid or will be paid, by or on behalf of the undersigned, to any person for influencing or attempting to influence an officer or employee of any agency, a Member of Congress, an officer or employee of Congress, or an employee of a Member of Congress in connection with the awarding of any federal contract, the making of any federal grant, the making of any federal loan, the entering into of any cooperative agreement, and the extension, continuation, renewal, amendment, or modification of any federal contract, grant, loan, or cooperative agreement.

22. Nondiscrimination. The Contractor agrees in the performance of this contract not to discriminate on the ground or because of race, creed, color, national origin or ancestry, sex, religion, handicap, age, status as a protected veteran or status as a qualified individual with a disability, or political opinion or affiliation, against any employee of Contractor or applicant for employment and shall include a similar provision in all subcontracts let or awarded hereunder. The parties hereby incorporate the requirements of 41 C.F.R. §§ 60-1.4(a)(7), 29 C.F.R. Part 471, Appendix A to Subpart A, 41 C.F.R. § 60- 300.5(a)ii and 41 C.F.R. § 60-741.5(a), if applicable.

a. This contractor and subcontractor shall abide by the requirements of 41 C.F.R. § 60-300.5(a). This regulation prohibits discriminations against qualified protected veterans, and requires affirmative action by covered prime contractors and subcontractors to employ and advance in employment qualified protected veterans.

b. This contractor and subcontractor shall abide by the requirements of 41 C.F.R. § 60-741.5(a). This regulation prohibits discrimination against qualified individuals on the basis of disability, and requires affirmative action by covered prime contractors and subcontractors to employ and advance in employment qualified individuals with disabilities.

23. Nonresident/Foreign Contractors. The Contractor shall procure and maintain during the life of this contract:

a. If the Contractor is a foreign corporation, a certificate of authority to transact business in the State of Missouri from the Secretary of State, unless exempt pursuant to the provisions of Section 351.570 R.S.Mo.

b. A certificate from the Missouri Director of Revenue evidencing compliance with the transient employer financial assurance law, unless exempt pursuant to the provisions of Section 285.230 RSMo.

24. Notices. All notices required or permitted hereinunder and required to be in writing may be given by FAX or by first class mail addressed to City and Contractor at the addresses shown above. The date of delivery of any notice given by mail shall be the date falling on the second full day after the day of its mailing. The date of delivery of notice by FAX transmission shall be deemed to be the date transmission occurs, except where the transmission is not completed by 5:00 p.m. on a regular business day at the terminal of the receiving party, in which case the date of delivery shall be deemed to fall on the next regular business day for the receiving party.

25. Statement that Project Federally Funded: It is understood that this contract is funded in whole or in part with CDBG-DR funds through the City of Joplin Community Development Block Grant Program

as administered by COMMERCE and is subject to those regulations and restrictions normally associated with federally-funded programs and any other requirements that the state may prescribe.

26. Records and Audits. The Contractor shall maintain accounts and records, including personnel, property, and financial records, adequate to identify and account for all costs pertaining to the Contract and such other records as may be deemed necessary by the City to assure proper accounting for all project funds. These records will be made available for audit purposes to the City or any authorized representative, and will be retained for three years after the expiration of this Contract.

27. General Independent Contractor Clause. This agreement does not create an employee/employer relationship between the parties. It is the parties' intention that CONTRACTOR will be an independent contractor and not the City's employee for all purposes, including, but not limited to, the application of the Fair Labor Standards Act minimum wage and overtime payments, Federal Insurance Contribution Act, the Social Security Act, the Federal Unemployment Tax Act, the provisions of the Internal Revenue Code, Missouri revenue and taxation laws, Missouri workers' compensation and unemployment insurance laws. CONTRACTOR will retain sole and absolute discretion in the judgment of the manner and means of carrying out CONTRACTOR's activities and responsibilities hereunder. CONTRACTOR agrees that it is a separate and independent enterprise from the public employer, that it has a full opportunity to find other business, that it has made its own investment in its business, and that it will utilize the skill necessary to perform the work. This agreement shall not be construed as creating any joint employment relationship between CONTRACTOR and the City, and the City will not be liable for any obligation incurred by CONTRACTOR, including but not limited to unpaid minimum wages and/or overtime premiums.

28. Equal Employment Opportunity. During the performance of this Contract, the Contractor agrees as follows:

a. The Contractor will not discriminate against any employee or applicant for employment because of race, creed, color, national origin, religion, or sex. The Contractor will take affirmative action to ensure that applicants are employed, and that employees are treated during employment, without regard to their race, creed, color, national origin, religion, or sex. Such action shall include, but not be limited to, employment, upgrading, demotion, or transfer; recruitment or recruitment advertising; layoff or termination; rates of pay or other forms of compensation; and selection for training, including apprenticeship. The Contractor agrees to post in conspicuous places, available to employees and applicants for employment, notices to be provided by the City setting forth the provisions of this non-discrimination clause.

b. The Contractor will, in all solicitation or advertisements for employees placed by or on behalf of the Contractor, state that all qualified applicants will receive consideration for employment without regard to race, creed, color, national origin, religion, or sex.

c. The Contractor will cause the foregoing provisions to be inserted in all subcontracts for any work covered by this Contract so that provisions will be binding upon each subcontractor, provided that the foregoing provisions shall not apply to contracts or subcontracts for standard commercial supplies or raw materials.

d. The Contractor will comply with all provisions of Executive Order 11246 of September 24, 1965, and of the rules, regulations, and relevant orders of the Secretary of Labor.

e. The Contractor will furnish all information and reports required by Executive Order 11246 of September 24, 1965, and by the rules, regulations, and orders of the Secretary of Labor, or pursuant thereto, and will permit access to his books, records, and accounts by the City and the Secretary of Labor for purposes of investigation to ascertain compliance with such rules, regulations, and orders.

f. The Contractor shall ensure that the hours of minority and female employment and training must be substantially uniform throughout the length of the contract and throughout each trade. The Contractor shall make a good faith effort to employ minorities and women evenly on each of its projects. The transfer of minority or female employees or trainees from contractor to contractor or from

project to project for the sole purpose of meeting the Contractor's goals shall be a violation of the contract, the Executive Order and the regulations in 41 CFR 60-4. Compliance with the goals will be measured against the total work hour performed.

g. In the event of the Contractor's noncompliance with the non-discrimination clauses of this Agreement or with any of such rules, regulations, or orders, this Agreement may be canceled, terminated, or suspended in whole or in part, and the Contractor may be declared ineligible for further Government contracts in accordance with procedures authorized in Executive Order 11246 of September 24, 1965, and such other sanctions may be imposed and remedies invoked as provided in Executive Order 11246 of September 24, 1965, or by rule, regulation, or order of the Secretary of Labor, or as otherwise provided by law.

h. The Contractor will include the provisions of paragraphs (a) through (g) in every subcontract or purchase order unless exempted by rules, regulations, or orders of the Secretary of Labor issued pursuant to Section 204 Executive Order 11246 of September 24, 1965, so that such provisions will be binding upon each subcontractor or vendor. The Contractor will take such action with respect to any subcontract or purchase order as the City may direct as a means of enforcing such provisions including sanctions for noncompliance. Provided, however, that in the event the Contractor becomes involved in, or is threatened with, litigation with a subcontractor or vendor as a result of such direction by the City, the Contractor may request the United States Government to enter into such litigation to protect the interests of the United States.

28. Women and Minority Business: The Contractor will use its best efforts to afford small businesses, minority business enterprises, women's business enterprises (including Section 3 businesses) and veteran –owned businesses the maximum practicable opportunity to participate in the performance of this contract. As used in this contract, the terms "small business" means a business that meets the criteria set forth in section 3(a) of the Small Business Act, as amended (15 U.S.C. 632), and "minority and women's business enterprise" means a business at least fifty-one (51) percent owned and controlled by minority group members or women. For the purpose of this definition, "minority group members" are Afro-Americans, Spanish-speaking, Spanish surnamed or Spanish-heritage Americans, Asian-Americans and American Indians. The Sub recipient and/or borrower may rely on written representations by businesses regarding their status as minority and female business enterprises in lieu of an independent investigation. The contractor must demonstrate to the City of Joplin's satisfaction that a good faith effort was made to ensure that minorities and women have been afforded equal opportunity to gain employment under the City of Joplin contract with the contractor. Payment may be withheld from a contractor's contract for failure to comply with these provisions.

a. Evidence of a "good faith effort" includes, but is not limited to:

b. The Contractor shall recruit prospective employees through the State Job bank website, managed by the Department of Labor and Workforce Development,

c. The Contractor shall keep specific records of its efforts, including records of all individuals interviewed and hired, including the specific numbers of minorities and women;

d. The Contractor shall actively solicit and shall provide the City of Joplin with proof of solicitations for employment, including but not limited to advertisements in general circulation media, professional service publications and electronic media.

29. Civil Rights Act of 1964. Under Title VI of the Civil Rights Act of 1964, no person shall, on the grounds of race, color, or national origin, be excluded from participation in, be denied the benefits of, or be subjected to discrimination under any program or activity receiving Federal financial assistance.

30. Section 3 of the Housing and Urban Development Act of 1968

a. The work to be performed under this contract is subject to the requirements of Section 3 of the Housing and Urban Development Act of 1968, as amended, 12 U.S.C. 1701u. Section 3 requires that to the greatest extent feasible, opportunities for training and employment be given to lower income residents of the project area and contracts for work, in connection with the project, be awarded to business concerns which are located in, or owned in substantial part by, persons residing in the area of

the project.

b. The parties to this contract will comply with the provision of said Section 3 and the regulations issued pursuant thereto by the Secretary of Housing and Urban Development set forth in 24 CFR 135, and all applicable rules and orders of the Department issued thereunder prior to the execution of this contract. The parties to this contract certify and agree that they are under no contractual or other disability that would prevent them from complying with these requirements.

c. The consultant will send to each labor organization or representative of workers, if applicable, with which he has a collective bargaining agreement or other contract or understanding, if any, a notice advising the said labor organization or workers' representative of his commitments under this Section 3 clause, and shall post copies of the notice in conspicuous place available to employees and applicants for employment or training.

d. The consultant will include this Section 3 clause in every subcontract for work, if applicable, in connection with the project and will, at the direction of the applicant for or recipient of Federal financial assistance, take appropriate action pursuant to the subcontract upon a finding that the subcontractor is in violation of regulations issued by the Secretary of Housing and Urban Development, 24 CFR Part 135. The contractor will not subcontract with any subcontractor where it has notice or knowledge that the latter has been found in violation of regulations under 24 CFR Part 135 and will not let any subcontract unless the subcontractor has first provided it with a preliminary statement of ability to comply with the requirements of these regulations.

e. Compliance with the provisions of Section 3, the regulations set forth in 24 CFR Part 135, and all applicable rules and orders of the Department issued hereunder prior to the execution of the contract, shall be a condition of the Federal financial assistance provided to the project, binding upon the applicant or recipient for such assistance, its successors and assigns. Failure to fulfill these requirements shall subject the applicant or recipient, its contractors and subcontractors, and its successors and assigns to those sanctions specified by the grant or loan agreement or contract through which Federal assistance is provided, and to such sanctions as are specified by 24 CFR Part 135.

31. Section 109(a) of the Housing and Community Development Act of 1974. No person in the United States shall on the grounds of race, color, national origin, religion, or sex be excluded from participation in, be denied the benefits of, or be subjected to discrimination under any program or activity funded in whole or in part with funds made available under this title. Any prohibition against discrimination on the basis of age under the Age Discrimination Act of 1975, or with respect to an otherwise qualified handicapped individual as provided in Section 504 of the Rehabilitation Act of 1973, shall also apply to any such program or activity.

32. Affirmative Action for Handicapped Workers

a. The Contractor will not discriminate against any employee or applicant for employment because of physical or mental handicap in regard to any position for which the employee or applicant for employment is qualified. The Contractor agrees to take affirmative action to employ, advance in employment, and to otherwise treat qualified handicapped individuals without discrimination based upon their physical or mental handicap in all employment practices, such as employment upgrading, demotion or transfer, recruitment, advertising, layoff or termination, rates of pay or other forms of compensation, and selection for training including apprenticeship.

b. The Contractor agrees to comply with the rules, regulations, and relevant orders of the Secretary of Labor issued pursuant to the Act.

c. In the event of the Contractor's noncompliance with the requirements of this clause, actions for noncompliance may be taken in accordance with the rules, regulations, and relevant orders of the Secretary of Labor issued pursuant to the Act.

d. The Contractor agrees to post in conspicuous places, available to employees and applicants for employment, notices in a form to be prescribed by the Director, provided by or through the contracting officer. Such notices shall state the contractor's obligation under the law to take affirmative action to employ and advance in employment qualified handicapped employees and applicants for employment, and the rights of the applicants and employees.

e The Contractor will notify each labor union or representative of workers with which it has a collective bargaining agreement or other contract understanding, that the contractor is bound by terms of Section 503 of the Rehabilitation Act of 1973 and is committed to take affirmative action to

employ and advance in employment physically and mentally handicapped individuals.

f. The Contractor will include the provisions of this clause in every subcontract or purchase order of $2,500 or more unless exempted by rules, regulations, or orders of the Secretary issued pursuant to Section 503 of the Act, so that such provisions will be binding upon each subcontractor or vendor. The Contractor will take such action with respect to any subcontractor or purchase order as the Director of the Office of Federal Contract Compliance Programs may direct to enforce such provisions, including action for noncompliance.

33. Section 504 of the Rehabilitation Act of 1973, as amended, provides for nondiscrimination of an otherwise qualified individual solely on the basis of his handicap in benefiting from any program or activity receiving Federal financial assistance. All recipients must certify to compliance with all provisions of this Section.

34. Age Discrimination Act of 1975. No person in the United States, on the basis of age, be excluded from participation in, be denied benefits of, or be subjected to discrimination under, any program or activity receiving Federal financial assistance.

35. Authorized Employees. Contractor acknowledges that Section285.530, RSMo, prohibits any business entity or employer from knowingly employing, hiring for employment, or continuing to employ an unauthorized alien to perform work within the State of Missouri. Contractor therefore covenants that is not knowingly in violation of subsection 1 or Section 285.530, RSMo, and that it will not knowingly employ, hire for employment, or continue to employ any unauthorized aliens to perform work on the Project, and that its employees are lawfully to work in the United States.

36. Interest of Contractor and Employees. The Contractor covenants that he/she presently has no interest and shall not acquire interest, direct or indirect, in the study area or any parcels therein or any other interest which would conflict in any manner or degree with the performance of his services hereunder. The Contractor further covenants that in the performance of this Contract, no person having any such interest shall be employed.

37. Interest of Members of a City. No member of the governing body of the City and no other officer, employee, or agent of the City who exercises any functions or responsibilities in connection with the planning and carrying out of the program, shall have any personal financial interest, direct or indirect, in this Contract, and the Contractor shall take appropriate steps to assure compliance.

38. Interest of Other Local Public Officials. No member of the governing body of the locality and no other public official of such locality, who exercises any functions or responsibilities in connection with the planning and carrying out of the program, shall have any personal financial interest, direct or indirect, in this Contract, and the Contractor shall take appropriate steps to assure compliance.

39. Affidavit for Contracts Over $5,000.00. That pursuant to Missouri Revised Statute Sections 285.525 through 285.550, if this contract exceeds the amount of $5,000.00 and Contractor is associated with a business entity, Contractor shall provide an acceptable notarized affidavit stating that the associated business entity is enrolled in and participates in a federal work authorization program with respect to the employees working in connection with the contracted services, and that said business entity does not knowingly employ any person who is an unauthorized alien in connection with the contracted services. Additionally, Contractor must provide documentation for said business entity evidencing current enrollment in a federal work authorization program.

40. Nonresident/Foreign Contractors. The Contractor shall procure and maintain during the life of this contract:

a. If the Contractor is a foreign corporation, a certificate of authority to transact business in the State of Missouri from the Secretary of State, unless exempt pursuant to the provisions of Section 351.572 RSMo.

b. A certificate from the Missouri Director of Revenue evidencing compliance with the transient employer financial assurance law, unless exempt pursuant to the provisions of Section 285.230 RSMo.

41. General Independent Contractor Clause. This agreement does not create an employee/employer relationship between the parties. It is the parties' intention that the Contractor will be an independent contractor and not the City's employee for all purposes, including, but not limited to, the application of the Fair Labor Standards Act minimum wage and overtime payments, Federal Insurance Contribution Act, the Social Security Act, the Federal Unemployment Tax Act, the provisions of the Internal Revenue Code, Missouri revenue and taxation laws, Missouri workers' compensation and unemployment insurance laws. The Contractor will retain sole and absolute discretion in the judgment of the manner and means of carrying out the Contractor's activities and responsibilities hereunder. The Contractor agrees that it is a separate and independent enterprise from the public employer, that it has a full opportunity to find other business, that it has made its own investment in its business, and that it will utilize a high level of skill necessary to perform the work. This agreement shall not be construed as creating any joint employment relationship between the Contractor and the City, and the City will not be liable for any obligation incurred by the Contractor, including but not limited to unpaid minimum wages and/or overtime premiums.

42. City Benefits. The Contractor shall not be entitled to any of the benefits established for the employees of the City nor be covered by the Worker's Compensation Program of the City.

43. Occupational License: The Contractor shall obtain and maintain an occupational license with the City of Joplin, Missouri, if required by city code and any required state or federal license. The cost for this occupational license shall be borne by the Contractor. No contract will be executed by the City until this occupational license has been obtained and that the Contractor is current on any City taxes is verified.

44. Safety Training. Pursuant to Missouri Revised Statute Section 292.675, Contractors and subcontractors who sign a contract to work on public works projects must provide a 10-hour OSHA construction safety program, or similar program approved by the Department of Labor and Industrial Relations, to be completed by their on-site employees within sixty (60) days of beginning work on the construction project. Contractors and subcontractors in violation of this provision will forfeit to the public body $2,500 plus $100 a day for each employee who is employed without training. Public bodies and contractors may withhold/assess these penalties from the payment due to those contractors and subcontractors if found to be in non-compliance.

45. Affidavit for Contracts Over $5,000.00. That pursuant to Missouri Revised Statute Sections 285.525 through 285.550, if this contract exceeds the amount of $5,000.00 and Contractor is associated with a business entity, Contractor shall provide an acceptable notarized affidavit stating that the associated business entity is enrolled in and participates in a federal work authorization program with respect to the employees working in connection with the contracted services, and that said business entity does not knowingly employ any person who is an unauthorized alien in connection with the contracted services. Additionally, Contractor must provide documentation for said business entity evidencing current enrollment in a federal work authorization program.

46. Compliance with Laws. Contractor agrees to comply with all applicable federal, state and local laws or rules and regulations applicable to the provision of services and products hereunder. Contractor affirmatively states that payment of all local, state, and federal taxes and assessments owed by Contractor is current.

47. Entire Agreement. This agreement contains the entire agreement of the parties. No modification, amendment, or waiver of any of the provisions of this agreement shall be effective unless in writing specifically referring hereto, and signed by both parties.

48. Remedies. Except as may be otherwise found in the contract documents, all claims, disputes, counter-claims, and other matters in question between the Owner and Contractor arising out of or related to this agreement or the breech thereof, will be decided by arbitration if the parties hereto mutually agree, or in a court of competent jurisdiction within the state in which the Owner is located.

49. Jurisdiction. This agreement and every question arising hereunder shall be construed or determined according to the laws of the State of Missouri. Should any part of this agreement be adjudicated, venue shall be proper only in the Circuit Court of Jasper County, Missouri.

IN WITNESS WHEREOF, the parties hereto have set their hands and seals on the day and year herein stated.

CERTIFICATE OF DIRECTOR OF FINANCE

I certify that the expenditure contemplated by this document is within the purpose of the appropriation to which it is to be charged and that there is an unencumbered balance of appropriated and available funds to pay therefor.

_____
Leslie Haase, Director of Finance

APPROVED AS TO FORM

_____
Peter Edwards, City Attorney

CONTRACTOR: R.E. Smith Construction Co.

By:_____

Printed Name:_____

Title:_____

CITY OF JOPLIN, MISSOURI

By:_____
Nicholas A. Heatherly, Public Works Director

END OF SECTION 004113.08

SECTION 004113.09 – PERFORMANCE BOND

PERFORMANCE BOND

KNOW ALL MEN BY THESE PRESENTS that_____as principal and_____, as surety are held and firmly bound to the City of Joplin, Missouri, in the sum of_____Dollars (_____) to be paid to the City of Joplin, Missouri, and for the lawful payment of said sum we, and each of us, hereby bind ourselves, our heirs, our executors, administrators, successors and assigns firmly by these presents,

The condition of this bond is such that:

WHEREAS the above-named principal did on the _____ day of_____, 20 ,enter into a contract with the City of Joplin, Missouri, for:

Selective demolition of existing site features, parking and loop trail development with lighting, earthmoving, landscape enhancements, site utilities, creation of a lake and onsite storm water management, and support features including restrooms, shelters, and site furnishings at Joplin Public Park.

NOW, THEREFORE, if the above-named principal shall well and truly:

Keep and perform all of the contract on his, it's or their part to be kept and performed, and faithfully comply with all of the laws of the State of Missouri and all the ordinances of the City of Joplin, Missouri, applicable to the aforesaid contract and this bond and the conditions of said contract, and at the time stipulated in said contract or within a reasonable time if not time as stipulated;

Then this obligation shall be void, otherwise it shall remain in full force and effect.

It is understood and agreed that this bond shall not be avoided because of changes in the plans or specifications for the work, or because of extensions of time for the performance of work, and the surety above-named does hereby waive notice of and does hereby consent to any such changes or extensions of time.

The principal and surety specifically hereby grant authority to the City of Joplin, Missouri, to date this bond consistent with the date of the contract upon signature of the contract by the City.

In addition to any other remedies which may be had by the City of Joplin, Missouri, under this bond, the City may in case of default or abandonment of the contract hereinbefore referred to notify the surety hereto by registered or certified mail directed to the surety or to its attorney-in-fact for it authorized at the time of the execution of this bond that such default or abandonment has occurred, which such notice need not be detailed but may be in generalities, and the surety shall have the obligation to inquire into the nature of such default or abandonment and to thereafter within sixty (60) days from the date of such notice proceed toward completion without undue delay of the improvement in accordance with the contract aforesaid; and in the event of default on the part of the surety to proceed to complete as aforesaid the City of Joplin, Missouri, shall have the right to itself complete the work, and upon completion to be reimbursed by the principal, the surety or both of them for the cost of said completion including cost of re-advertisements, preparation of new plans, contracts, and all other ordinary and reasonable expenses in connection with completion of the work.

This bond shall be governed by the laws of the State of Missouri. The parties hereto agree that should any litigation arise out of this bond, the venue for such litigation shall be in the Circuit Court of Greene

SECTION 004113.10 – PAYMENT BOND

PAYMENT BOND FOR LABOR AND MATERIALS

KNOW ALL MEN BY THESE PRESENTS that _____ as principal and _____, as surety are held and firmly bound to the City of Joplin, Missouri, in the sum of _____ Dollars ($_____) to be paid to the City of Joplin, Missouri, and for the lawful payment of said sum we, and each of us, hereby bind ourselves, our heirs, our executors, administrators, successors and assigns firmly by these presents,

The condition of this bond is such that:

WHEREAS the above-named principal did on the _____ day of _____, 20___, enter into a contract with the City of Joplin, Missouri, for:

Selective demolition of existing site features, parking and loop trail development with lighting, earthmoving, landscape enhancements, site utilities, creation of a lake and onsite storm water management, and support features including restrooms, shelters, and site furnishings at Joplin Public Park.

NOW, THEREFORE, if the above-named principal shall well and truly:

Pay for any and all materials, lubricants, oil, gasoline, grain, hay, feed, coal and coke, repairs on machinery, groceries and foodstuffs, equipment and tools consumed or used in connection with the construction of the work aforedescribed, and all insurance premiums both for compensation and for all other kinds of insurance on said work above described, and for all labor performed in the work whether by the principal or by subcontractor or otherwise and at the prevailing hourly rate of wages made applicable to the work as specified by the contract (if a prevailing hourly rate of wages shall have been so specified).

Then this obligation shall be void, otherwise it shall remain in full force and effect.

It is understood and agreed that this bond shall not be avoided because of changes in the plans or specifications for the work, or because of extensions of time for the performance of work, and the surety above-named does hereby waive notice of and does hereby consent to any such changes or extensions of time.

The principal and surety specifically hereby grant authority to the City of Joplin, Missouri, to date this bond consistent with the date of the contract upon signature of the contract by the City.

It is understood and agreed that any person entitled to payment for any of the matters upon which this bond is conditioned shall have the right in his name or in the name of the City of Joplin, Missouri, to bring suit upon this bond for the recovery of such payment. It is further agreed that no such suit shall be instituted after the expiration of ninety (90) days from the completion of the contract hereinbefore referred to unless otherwise provided.

This bond shall be governed by the laws of the State of Missouri. The parties hereto agree that should any litigation arise out of this bond, the venue for such litigation shall be in the Circuit Court of Greene County, Missouri, and the parties hereto expressly waive all rights to venue inconsistent therewith.

IN WITNESS WHEREOF, we have hereunto set our hands and seals this _____ day of _____, 20___, or have caused these presents to be executed by our authorized agent on the same day and year.

Company: _____

By: _____

_____

Surety: _____

By: _____

Approved as to Form:

_____
Peter Edwards, City Attorney

END OF SECTION 004113.10

CDBG COMPLIANCE PROVISIONS
FOR
PROFESSIONAL SERVICES CONTRACTS

CONTENTS

1. EQUAL EMPLOYMENT OPPORTUNITY (Equal Opportunity Clause)

2. CERTIFICATION OF NONSEGREGATED FACILITIES

3. CIVIL RIGHTS

4. SECTION 109 OF THE HOUSING AND COMMUNITY DEVELOPMENT ACT OF 1974

5. SECTION 3 OF THE HOUSING AND URBAN DEVELOPMENT ACT OF 1968 - COMPLIANCE IN THE PROVISION OF TRAINING, EMPLOYMENT AND BUSINESS OPPORTUNITIES

6. SECTION 503 OF THE REHABILITATION ACT OF 1973 (29 USC 793)

7. SECTION 504 OF THE REHABILITATION ACT OF 1973, AS AMENDED

8. AGE DISCRIMINATION ACT OF 1975

9. CERTIFICATION OF COMPLIANCE WITH AIR AND WATER ACTS

10. FLOOD DISASTER PROTECTION

11. ACCESS TO RECORDS - MAINTENANCE OF RECORDS

12. INSPECTION

13. REPORTING REQUIREMENTS

14. CONFLICT OF INTEREST

15. ACTIVITIES AND CONTRACTS NOT SUBJECT TO EXECUTIVE ORDER 11246, AS AMENDED

16. PATENTS

17. COPYRIGHT

18. TERMINATION FOR CAUSE

19. TERMINATION FOR CONVENIENCE

20. ENERGY EFFICIENCY

21. SUBCONTRACTS

22. DEBARMENT, SUSPENSION, AND INELIGIBILITY

23. BREACH OF CONTRACT TERMS

24. PROVISIONS REQUIRED BY LAW DEEMED INSERTED

25. CHANGES

26. PERSONNEL

27. ANTI-KICKBACK RULES

28. ASSIGNABILITY

29. INTEREST OF CONTRACTOR

30. POLITICAL ACTIVITY

31. COMPLIANCE WITH THE OFFICE OF MANAGEMENT AND BUDGET

32. DISCRIMINATION DUE TO BELIEF

33. CONFIDENTIAL FINDINGS

34. LOBBYING

1. EQUAL EMPLOYMENT OPPORTUNITY (Equal Opportunity Clause)
(applicable to contracts and subcontracts above $10,000)

During the performance of this contract, the Contractor agrees as follows:

A. The Contractor will not discriminate against any employee or applicant for employment because of race, color, religion, sex, or national origin. The Contractor will take affirmative action to ensure that applicants are employed, and that employees are treated during employment, without regard to their race, color, religion, sex, or national origin. Such

action shall include, but not be limited to, the following: employment, upgrading, demotion, or transfer; recruitment or recruitment advertising; layoff or termination; rates of pay or other forms of compensation; and selection for training, including apprenticeship. The Contractor agrees to post in conspicuous places, available to employees and applicants for employment, notices to be provided setting forth the provisions of this nondiscrimination clause.

B. The Contractor will, in all solicitations or advertisements for employees placed by or on behalf of the Contractor, state that all qualified applicants will receive consideration without regard to race, color, religion, sex, or national origin.

C. The Contractor will send to each labor union or representative of workers with which he has a collective bargaining agreement or other contract or understanding, a notice to be provided by the Contract Compliance Officer advising the said labor union or workers' representatives of the Contractor's commitment under this section, and shall post copies of the notice in conspicuous places available to employees and applicants for employment.

D. The Contractor will comply with all provisions of Executive Order 11246 of September 24, 1965, as amended, and the rules, regulations, and relevant orders of the Secretary of Labor.

E. The Contractor will furnish all information and reports required by Executive Order 11246 of September 24, 1965, as amended, and by rules, regulations, and orders of the Secretary of Labor, or pursuant thereto, and will permit access to his books, records, and accounts by the Department and the Secretary of Labor for purposes of investigation to ascertain compliance with such rules, regulations, and others.

F. In the event of the Contractor's noncompliance with the non-discrimination clauses of this contract or with any of the said rules, regulations, or orders, this contract may be cancelled, terminated, or suspended in whole or in part and the Contractor may be declared ineligible for further Government contracts in accordance with procedures authorized in Executive Order 11246 of September 24, 1965, as amended, or by rule, regulation, or order of the Secretary of Labor, or as otherwise provided by law.

G. The Contractor will include the provisions of the sentence immediately preceding paragraph A and the provisions of paragraphs A through G in every subcontract or purchase order unless exempted by rules, regulations, or orders of the Secretary of Labor issued pursuant to Section 204 of Executive Order 11246 of September 24, 1965, as amended, so that such provisions will be binding upon each subcontractor or vendor. The Contractor will take such action with respect to any subcontract or purchase order as the Department may direct as a means of enforcing such provisions, including sanctions for noncompliance. Provided, however, that in the event a contractor becomes involved in, or is threatened with, litigation with a subcontractor or vendor as a result of such direction by the Department, the Contractor may request the United States to enter into such litigation to protect the interest of the United States.

2. <u>CERTIFICATION OF NONSEGREGATED FACILITIES</u>
(applicable to contracts and subcontracts over $10,000)

By the submission of this bid, the bidder, offeror, applicant or subcontractor certifies that he/she does not maintain or provide for his/her establishments, and that he/she does not permit employees to perform their services at any location, under his/her control, where segregated

facilities are maintained. He/she certifies further that he/she will not maintain or provide for employees any segregated facilities at any of his/her establishments, and he/she will not permit employees to perform their services at any location under his/her control where segregated facilities are maintained. The bidder, offeror, applicant or subcontractor agrees that a breach of this certification is a violation of the equal opportunity clause of this contract.

As used in this certification, the term "segregated facilities" means any waiting rooms, work areas, rest rooms and wash rooms, restaurants and other eating areas, time clocks, locker rooms, and other storage or dressing areas, parking lots, drinking fountains, recreation or entertainment areas, transportation and housing facilities provided for employees which are segregated by explicit directive or are, in fact, segregated on the basis of race, color, religion, or national origin because of habit, local custom, or any other reason.

He/she further agrees that (except where he/she has obtained for specific time periods) he/she will obtain identical certification from proposed subcontractors prior to the award of subcontracts exceeding $10,000 which are not exempt from the provisions of the equal opportunity clause; that he/she will retain such certifications in his/her files; and that he/she will forward the following notice to such proposed subcontractors (except where proposed subcontractors have submitted identical certifications for specific time periods).

3. CIVIL RIGHTS

The Contractor shall comply with the provisions of Title VI of the Civil Rights Act of 1964. No person shall, on the grounds of race, color, or national origin, be excluded from participation in, be denied the benefits of, or be subjected to discrimination under any program or activity receiving federal financial assistance.

4. SECTION 109 OF THE HOUSING AND COMMUNITY DEVELOPMENT ACT OF 1974

The Contractor shall comply with the provisions of Section 109 of the Housing and Community Development Act of 1974. No person in the United States shall on the grounds of race, color, national origin, or sex be excluded from participation in, be denied the benefits of, or be subjected to discrimination under any program or activity funded in whole or in part with funds made available under this title. Section 109 further provides that discrimination on the basis of age under the Age Discrimination Act of 1975 or with respect to an otherwise qualified handicapped individual as provided in Section 504 of the Rehabilitation Act of 1973, as amended, is prohibited.

5. SECTION 3 OF THE HOUSING AND URBAN DEVELOPMENT ACT OF 1968 - COMPLIANCE IN THE PROVISION OF TRAINING, EMPLOYMENT AND BUSINESS OPPORTUNITIES

A. The work to be performed under this contract is subject to the requirements of Section 3 of the Housing and Urban Development Act of 1968, as amended, 12 U.S.C. 1701u (section 3). The purpose of section 3 is to ensure that employment and other economic opportunities generated by HUD assistance or HUD-assisted projects covered by Section 3, shall, to the

greatest extent feasible, be directed to low- and very low-income persons, particularly persons who are recipients of HUD assistance for housing.

B. The parties to this contract agree to comply with HUD's regulations in 24 CFR part 135, which implement Section 3. As evidenced by their execution of this contract, the parties to this contract certify that they are under no contractual or other impediment that would prevent them from complying with the part 135 regulations.

C. The contractor agrees to send to each labor organization or representative of workers with which the contractor has a collective bargaining agreement or other understanding, if any, a notice advising the labor organization or workers' representative of the contractor's commitments under this Section 3 clause, and will post copies of the notice in conspicuous places at the work site where both employees and applicants for training and employment positions can see the notice. The notice shall describe the Section 3 preference, shall set forth minimum number and job titles subject to hire, availability of apprenticeship and training positions, the qualifications for each, and the name and location of the person(s) taking applications for each of the positions, and the anticipated date the work shall begin.

D. The contractor agrees to include this Section 3 clause in every subcontract subject to compliance with regulations in 24 CFR part 135, and agrees to take appropriate action, as provided in an applicable provision of the subcontract or in this Section 3 clause, upon a finding that the subcontractor is in violation of the regulations in 24 CFR part 135. The contractor will not subcontract with any subcontractor where the contractor has notice or knowledge that the subcontractor has been found in violation of the regulations in 24 CFR part 135.

E. The contractor will certify that any vacant employment positions, including training positions, that are filled (1) after the contractor is selected but before the contract is executed, and (2) with persons other than those to whom the regulations of 24 CFR part 135 require employment opportunities to be directed, were not filled to circumvent the contractor's obligations under 24 CFR part 135.

F. Noncompliance with HUD's regulations in 24 CFR part 135 may result in sanctions, termination of this contract for default, and debarment or suspension from future HUD assisted contracts.

~~G. With respect to work performed in connection with Section 3 covered Indian housing assistance, Section 7(b) of the Indian Self-Determination and Education Assistance Act (25 U.S.C. 450e) also applies to the work to be performed under this contract. Section 7(b) requires that to the greatest extent feasible (i) preference and opportunities for training and employment shall be given to Indians, and (ii) preference in the award of contracts and subcontracts shall be given to Indian organizations and Indian-owned Economic Enterprises. Parties to this contract that are subject to the provisions of Section 3 and section 7(b) agree to comply with Section 3 to the maximum extent feasible, but not in derogation of compliance with Section 7(b).~~

6. <u>SECTION 503 OF THE REHABILITATION ACT OF 1973 (29 USC 793)</u>
(applicable to contracts and subcontracts over $10,000)

A. The contractor will not discriminate against any employee or applicant for employment because of physical or mental handicap in regard to any position for which the employee or applicant for employment is otherwise qualified. The contractor agrees to take affirmative action to employ, advance in employment and otherwise treat qualified handicapped individuals without discrimination based upon their physical or mental handicap in all employment practices such as the following: employment upgrading, demotion or transfer, recruitment, advertising, layoff or termination, rates of pay or other forms of compensation, and selection for training, including apprenticeship.

B. The Contractor agrees to comply with the rules, regulations, and relevant orders of the Secretary of Labor issued pursuant to the Act.

C. In the event of the Contractor's noncompliance with the requirements of this clause, actions for noncompliance may be taken in accordance with the rules, regulations, and relevant orders of the Secretary of Labor issued pursuant to the Act.

D. The Contractor agrees to post in conspicuous places, available to employees and applicants for employment, notices in a form to be prescribed by the Director, provided by or through the contracting officer. Such notices shall state the Contractor's obligation under the law to take affirmative action to employ and advance in employment qualified handicapped employees and applicants for employment, and the rights of applicants and employees.

E. The Contractor will notify each labor union or representative of workers with which it has a collective bargaining agreement or other contract understanding, that the Contractor is bound by the terms of Section 503 of the Rehabilitation Act of 1973, and is committed to take affirmative action to employ and advance in employment physically and mentally handicapped individuals.

F. The Contractor will include the provisions of this clause in every subcontract or purchase order of $10,000 or more unless exempted by rules, regulations, or orders of the Secretary issued pursuant to Section 503 of the Act, so that such provisions will be binding upon each subcontractor or vendor. The Contractor will take such action with respect to any subcontract or purchase order as the Director of the Office of Federal Contract Compliance Programs may direct to enforce such provisions, including action for noncompliance.

7. SECTION 504 OF THE REHABILITATION ACT OF 1973, AS AMENDED

The Contractor agrees that no otherwise qualified individual with disabilities shall, solely by reason of his disability, be denied the benefits, or be subjected to discrimination including discrimination in employment, any program or activity that receives the benefits from the federal financial assistance.

8. AGE DISCRIMINATION ACT OF 1975

The Contractor shall comply with the provisions of the Age Discrimination Act of 1975. No person in the United States shall, on the basis of age, be excluded from participation in, be denied the benefits of, or be subjected to discrimination under, any program or activity receiving federal financial assistance.

9. CERTIFICATION OF COMPLIANCE WITH AIR AND WATER ACTS

(applicable to contracts and subcontracts exceeding $100,000)

The Contractor and all subcontractors shall comply with the requirements of the Clean Air Act, as amended, 42 USC 1857 et seq., the Federal Water Pollution Control Act, as amended, 33 USC 1251 et seq., and the regulations of the Environmental Protection Agency with respect thereto, at 40 CFR Part 15, as amended.

In addition to the foregoing requirements, all nonexempt contractors and subcontractors shall furnish to the owner, the following:

~~A. A stipulation by the Contractor or subcontractors, that any facility to be utilized in the performance of any nonexempt contract or subcontract, is not listed on the List of Violating Facilities issued by the Environmental Protection Agency (EPA) pursuant to 40 CFR Part 15, as amended.~~

~~B. Agreement by the Contractor to comply with all the requirements of Section 114 of the Clean Air Act, as amended, (42 USC 1857 c-8) and Section 308 of the Federal Water Pollution Control Act, as amended, (33 USC 1318) relating to inspection, monitoring, entry, reports and information, as well as all other requirements specified in said Section 114 and Section 308, and all regulations and guidelines issued thereunder.~~

~~C. A stipulation that as a condition for the award of the contract, prompt notice will be given of any notification received from the Director, Office of Federal Activities, EPA, indicating that a facility utilized, or to be utilized for the contract, is under consideration to be listed on the EPA List of Violating Facilities.~~

~~D. Agreement by the Contractor that he will include, or cause to be included, the criteria and requirements in paragraph (1) through (4) of this section in every nonexempt subcontract and requiring that the Contractor will take such action as the government may direct as a means of enforcing such provisions.~~

10. FLOOD DISASTER PROTECTION

This contract is subject to the requirements of the Flood Disaster Protection Act of 1973 (P.L. 93-234). Nothing included as a part of this contract is approved for acquisition or construction purposes as defined under Section 3(a) of said Act, for use in an area identified by the Secretary of HUD as having special flood hazards which is located in a community not then in compliance with the requirements for participation in the National Flood Insurance Program pursuant to Section 201(d) of said Act; and the use of any assistance provided under this contract for such acquisition for construction in such identified areas in communities then participating in the National Flood Insurance Program shall be subject to the mandatory purchase of flood insurance requirements or Section 102(a) of said Act.

Any contract or agreement for the sale, lease, or other transfer of land acquired, cleared or improved with assistance provided under this Contract shall contain, if such land is located in an

area identified by the Secretary as having special flood hazards and in which the sale of flood insurance has been made available under the National Flood Insurance Act of 1968, as amended, 42 U.S.C. 4001 et seq., provisions obligating the transferee and its successors or assigns to obtain and maintain, during the ownership of such land, such flood insurance as required with respect to financial assistance for acquisition or construction purposes under Section 102(a) of Flood Disaster Protection Act of 1973.

11. ACCESS TO RECORDS - MAINTENANCE OF RECORDS

The City of Joplin, the Department of Housing and Urban Development, the Comptroller General of the United States, or any of their duly authorized representatives, shall have access to any books, documents, papers and records of the Contractor which are directly pertinent to this specific contract, for the purpose of audits, examinations, and making excerpts and transcriptions. All records connected with this contract will be maintained in a central location by the unit of local government and will be maintained for a period of five (5) years from the official date of the State's final closeout of the grant.

12. INSPECTION

The authorized representative and agents of the City of Joplin and the Department of Housing and Urban Development shall be permitted to inspect all work, materials, payrolls, records of personnel, invoices of materials, and other relevant data and records.

13. REPORTING REQUIREMENTS

The Contractor shall complete and submit all reports, in such form and according to such schedule, as may be required by the Owner.

14. CONFLICT OF INTEREST

A. No officer or employee of the local jurisdiction or its designees or agents, no member of the governing body, and no other public official of the locality who his/her tenure or for one year thereafter, shall have any interest, direct or indirect, in any contract or subcontract, or the proceeds thereof, for work to be performed. Further, the Contractor shall cause to be incorporated in all subcontracts the language set forth in this paragraph prohibiting conflict of interest.

B. No member of or delegate to Congress, or Resident Commissioner, shall be admitted to any share or part of this contract or to any benefit that may arise therefrom, but this provision shall not be construed to extend to this contract if made with a corporation for its general benefit.

15. ACTIVITIES AND CONTRACTS NOT SUBJECT TO EXECUTIVE ORDER 11246, AS AMENDED

(applicable to contracts and subcontracts of $10,000 and under)

During the performance of this contract, the Contractor agrees as follows:

A. The Contractor shall not discriminate against any employee or applicant for employment because of race, color, religion, sex, or national origin. The Contractor shall take affirmative action to ensure that applicants for employment are employed, and that employees are treated during employment, without regard to their race, color, religion, sex, or national origin. Such action shall include, but not be limited to, the following: employment, upgrading, demotion, or transfer; recruitment or recruitment advertising; layoff or termination; rates of pay or other forms of compensation; and selection for training, including apprenticeship.

B. The Contractor shall post in conspicuous places, available to employees and applicants for employment, notices to be provided by Contracting Officer setting forth the provisions of this non-discrimination clause. The Contractor shall state that all qualified applicants will receive consideration for employment without regard to race, color, religion, sex, or national origin.

C. Contractors shall incorporate foregoing requirements in all subcontracts.

16. PATENTS

A. The Contractor shall hold and save the Owner and its officers, agents, servants, and employees harmless from liability of any nature or kind, including cost and expenses for, or on account of any patented or unpatented invention, process, article, or appliance manufactured or used in the performance of the contract including its use by the Owner, unless otherwise specifically stipulated in the Contract Document.

B. License or Royalty Fees: License and/or Royalty Fees for the use of a process which is authorized by the Owner of the project must be reasonable, and paid to the holder of the patent, or his authorized license, direct by the Owner and not by or through the Contractor.

C. If the Contractor uses any design device or materials covered by letters, patent or copyright, he shall provide for such use by suitable agreement with the owner of such patented or copy-righted design device or material. It is mutually agreed and understood, that without exception the contract prices shall include all royalties or costs arising from the use of such design, device or materials, in any way involved in the work. The Contractor and/or his Sureties shall indemnify and save harmless the Owner of the project from any and all claims for infringement by reason of the use of such patented or copy-righted design, device or materials or any trademark or copy-right in connection with work agreed to be performed under this contract, and shall indemnify the Owner for any cost, expense, or damage which it may be obliged to pay by reason of such infringement at any time during the prosecution of the work or after completion of the work.

17. COPYRIGHT

No materials, to include but not limited to reports, maps, or documents produced as a result of this contract, in whole or in part, shall be available to the Contractor for copyright purposes. Any such materials produced as a result of this contract that might be subject to copyright shall be the property of the Owner and all such rights shall belong to the Owner.

18. TERMINATION FOR CAUSE

If, through any cause, the Contractor shall fail to fulfill in a timely and proper manner his obligations under this contract, or if the Contractor shall violate any of the covenants, agreements, or stipulations of this contract, the Owner shall thereupon have the right to terminate this contract by giving written notice to the Contractor of such termination and specifying the effective date thereof, at least five (5) days before the effective date of such termination. In such event, all finished or unfinished documents, data, studies, surveys, drawings, maps, models, photographs, and reports prepared by the Contractor under this contract shall, at the option of the Owner, become the Owner's property and the Contractor shall be entitled to receive just and equitable compensation for any work satisfactorily completed hereunder. Notwithstanding the above, the Contractor shall not be relieved of liability to the Owner for damages sustained by the Owner by virtue of any breach of the contract by the Contractor, and the Owner may withhold any payments to the Contractor for the purpose of set-off until such time as the exact amount of damages due the Owner from the Contractor is determined.

19. TERMINATION FOR CONVENIENCE

The Owner may terminate this contract at any time by giving at least ten (10) days notice in writing to the Contractor. If the contract is terminated by the Owner as provided herein, the Contractor will be paid for the time provided and expenses incurred up to the termination date.

~~20. ENERGY EFFICIENCY~~

~~The Contractor shall comply with mandatory standards and policies relating to energy efficiency which are contained in the state energy conservation plan issued in compliance with the Energy Policy and Conservation Act (Public Law 94-163).~~

21. SUBCONTRACTS

A. The Contractor shall not enter into any subcontract with any subcontractor who has been debarred, suspended, declared ineligible, or voluntarily excluded from participating in contacting programs by any agency of the United States Government or the City of Joplin.
.

B. The Contractor shall be as fully responsible to the Owner for the acts and omissions of the Contractor's subcontractors, and of persons either directly or indirectly employed by them, as he is for the acts and omissions of persons directly employed by the Contractor.

C. The Contractor shall cause appropriate provisions to be inserted in all subcontracts relative to the work to bind subcontractor to the Contractor by the terms of the contract documents insofar as applicable to the work of subcontractors and to give the Contractor the same power as regards terminating any subcontract that the Owner may exercise over the Contractor under any provision of the contract documents.

D. Nothing contained in this contract shall create any contractual relation between any subcontractor and the Owner.

22. DEBARMENT, SUSPENSION, AND INELIGIBILITY

The Contractor represents and warrants that it and its subcontractors are not debarred, suspended, or placed in ineligibility status under the provisions of 24 CFR 24 (government debarment and suspension regulations).

23. BREACH OF CONTRACT TERMS

Any violation or breach of terms of this contract on the part of the Contractor or the Contractor's subcontractors may result in the suspension or termination of this contract or such other action that may be necessary to enforce the rights of the parties of this contract. The duties and obligations imposed by the contract documents and the rights and remedies available thereunder shall be in addition to and not a limitation of any duties, obligations, rights and remedies otherwise imposed or available by law.

24. PROVISIONS REQUIRED BY LAW DEEMED INSERTED

Each and every provision of law and clause required by law to be inserted in this contract shall be deemed to be inserted herein and the contract shall be read and enforced as though it were included herein, and if through mistake or otherwise any such provision is not inserted, or is not correctly inserted, then upon the application of either party the contract shall forthwith be physically amended to make such insertion or correction.

25. CHANGES

The Owner may, from time to time, request changes in the scope of the services of the Contractor to be performed hereunder. Such changes, including any increase or decrease in the amount of the Contractor's compensation which are mutually agreed upon by and between the Owner and the Contractor, shall be incorporated in written and executed amendments to this Contract.

26. PERSONNEL

The Contractor represents that it has, or will secure at its own expense, all personnel required in performing the services under this Contract. Such personnel shall not be employees of or have any contractual relationship with the Owner.
All the services required hereunder will be performed by the Contractor or under its supervision, and all personnel engaged in the work shall be fully qualified and shall be authorized or permitted under State and local law to perform such services.

No person who is serving sentence in a penal or correctional institution shall be employed on work under this Contract.

27. ANTI-KICKBACK RULES

Salaries of personnel performing work under this Contract shall be paid unconditionally and not less often than once a month without payroll deduction or rebate on any account except only such payroll deductions as are mandatory by law or permitted by the applicable regulations issued by the Secretary of Labor pursuant to the "Anti-Kickback Act" of June 13, 1934 (48 Stat. 948; 62 Stat. 740; 63 Stat. 108; Title 18 U.S.C. 874; and Title 40 U.S.C. 276c). The Contractor shall comply with all applicable "Anti-Kickback" regulations and shall insert appropriate provisions in all subcontracts covering work under this contract to insure compliance by the subcontractors with such regulations, and shall be responsible for the submission of affidavits required of subcontractors thereunder except as the Secretary of Labor may specifically provide for variations of or exemptions from the requirements thereof.

28. ASSIGNABILITY

The Contractor shall not assign any interest in this Contract, and shall not transfer any interest in the same (whether by assignment or novation) without prior written approval of the Owner provided that claims for money due or to become due the Contractor from the Owner under this Contract may be assigned to a bank, trust company, or other financial institution, or to a Trustee in Bankruptcy, without such approval. Notice of any such assignment or transfer shall be furnished promptly to the Owner.

29. INTEREST OF CONTRACTOR

The Contractor covenants that he presently has no interest and shall not acquire any interest direct or indirect in the above described project or any parcels therein or any other interest which would conflict in any manner or degree with the performance of his services hereunder. The Contractor further covenants that in the performance of this Contract no person having any such interest shall be employed.

30. POLITICAL ACTIVITY

The Contractor will comply with the provisions of the Hatch Act (5 U.S.C. 1501 et seq.), which limits the political activity of employees.

31. COMPLIANCE WITH THE OFFICE OF MANAGEMENT AND BUDGET

The parties agree to comply with the regulations, policies, guidelines, and requirements of the Office of Management and Budget, Circulars A-95, A-102, A-133, and A-54, as they relate to the use of Federal funds under this contract.

32. DISCRIMINATION DUE TO BELIEFS

No person with responsibilities in operation of the project to which this grant relates will discriminate with respect to any program participant or any applicant for participation in such program because of political affiliation or beliefs.

33. CONFIDENTIAL FINDINGS

All of the reports, information, data, etc., prepared or assembled by the Contractor under this Contract are confidential, and the Contractor agrees that they shall not be made available to any individual or organization without prior written approval of the Owner.

34. LOBBYING

The Contractor certifies, to the best of his or her knowledge and belief that:

1. No federally appropriated funds have been paid or will be paid, by or on behalf of the contractor, to any person for influencing or attempting to influence an officer or employee of any agency, a member of Congress, an officer or employee of Congress, or an employee of a member of Congress in connection with the awarding of any federal contract, the making of any federal grant, the making of any federal loan, the entering into of any cooperative agreement, and the extension, continuation, renewal, amendment, or modification of any federal contract, grant, loan, or cooperative agreement.

2. If any funds other than federally appropriated funds have been paid or will be paid to any person for influencing or attempting to influence an officer or employee of any agency, a member of Congress, an officer or employee of Congress, or an employee of a member of Congress in connection with this federal contract, grant, loan, or cooperative agreement, the contractor shall complete and submit Standard Form-LLL, "Disclosure Form to Report Lobbying," in accordance with its instructions.

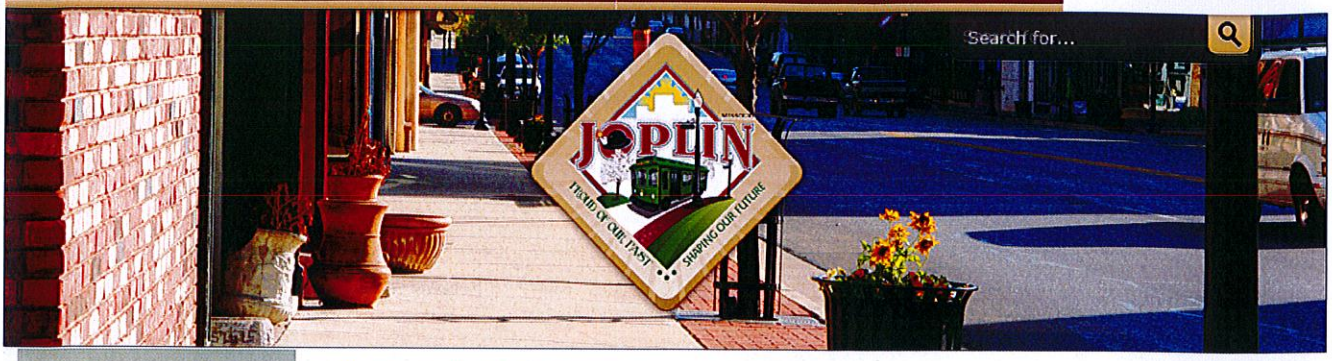

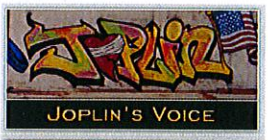

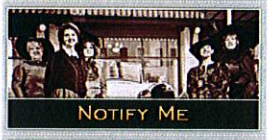

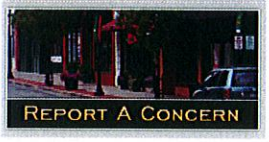

Sign up to receive a text message or email when new bids are added!

Format for Printing

Bid Number:	2015-011
Bid Title:	Joplin Public Park - 2015-011
Category:	Public Works
Status:	Closed
Additional Status Information:	Mandatory PreBid Meeting/Site Visit 8/11/15, 10:00 AM

Description:

CITY OF JOPLIN, MISSOURI

MUNICIPAL FACILITIES

602 S. Main Street, Joplin, MO 64801

INVITATION FOR BID NO.: 2015-011

OPEN DATE: August 2, 2015

NOTICE TO CONTRACTORS

The City of Joplin, ("the City"), Missouri has received funds from the Department of Housing and Urban Development (HUD) through the Community Development Block Grant – Disaster Recovery Program (CDBG-DR). Sealed bids will be accepted for the following project on the bid date shown below, and then publicly opened and read aloud:

JOPLIN PUBLIC PARK.

The Project consists primarily of all work described on the drawings and specifications, including but not limited to, selective demolition of existing site features, parking and loop trail development with lighting, earthmoving, landscape enhancements, site utilities, creation of a lake and onsite storm water management, and support features including restrooms, shelters, and site furnishings.

Sealed bids will be accepted at Joplin City Hall, 602 S. Main Street, 4th Floor; Joplin, MO 64801 until 2pm, CST, August 27, 2015 and read aloud.

Pre-bid Conference/Site Investigation; A mandatory pre-bid conference and site investigation will be held at 10 am, CST August 11, 2015 located at Joplin City Hall, 602 S. Main St., 5th Floor. Staff and Design Team members will be available at the project site at 11:15 am until 12:30 for any questions following the prebid meeting. All bidders are strongly encouraged to review the work site.

Plans and Specifications for the project are available by contacting Derek Don (derekd@swtdesign.com).

In the subject line, please indicate "Joplin Public Park – Request for Drawings and Specifications."

All questions shall be submitted in writing by 2pm, CST on August 19, 2015 to CDBG-RFP@joplinmo.org and derekd@swtdesign.com. In the subject line include "Joplin Public Park." Phone calls will not be answered or returned.

Contact for Contract or Bidding Issues: Tony Robyn at trobyn@joplinmo.org or alternate Patty Heagel at pheagel@joplinmo.org.

Contact for Design Issues: Tony Robyn at trobyn@joplinmo.org and CDBG-RFP@joplinmo.org.

Bid Security: A bid security equivalent to five (5%) percent of the bid price will be required from each Bidder. The "bid security" shall consist of a firm commitment such as a bid bond, certified check, or other negotiable instrument accompanying a bid as assurance that the Bidder will, upon acceptance of this bid, execute such contractual documents as may be required within the time specified; said Bidder's bond or check to be paid unconditionally to the City of Joplin, Missouri.

Subcontractors: The Bidder shall submit a list of subcontractors with their bid.

Performance Bond and Labor and Materials Payment Bond: A Performance Bond and a Labor and Materials Payment Bond on the City's standard forms for the full amount of the contract will be required of the successful Bidder.

Prevailing Wage: All labor utilized in the construction of above public improvements shall be paid a wage of no less than the

My Favorites Pages Modules Live Edit Tony Help

prevailing hourly rate of wages of work of a similar character in this locality as established by the Missouri Department of Labor and Industrial Relations in accordance with the Federal Davis-Bacon Act, whichever is higher. This project is classified in the Heavy Construction category and if a classification is not found in this category, the contractor shall refer to the Building category and use the higher rate.

Non-Discrimination Policy: The City of Joplin hereby notifies all bidders that it will affirmatively ensure that in any contract entered into pursuant to this advertisement, disadvantaged business enterprises will be afforded full opportunity to submit bids in response to this invitation and will not be discriminated against on the grounds of race, color, or national origin in consideration for an award.

Insurance: The successful Bidder shall comply with certain insurance requirements as specified in the Joplin Public Park INVITATION FOR BID documents.

Statement of Qualifications: The Bidder must have a current Statement of Qualifications on file with the City otherwise such statement must be submitted with the Bidder's proposal.

Withdrawal of Bids: The city reserves the right to reject any and all bids and to waive informalities in bids.

No bid may be withdrawn for a period of sixty (60) days after the time set for receipt and opening of bids.

The City of Joplin is and Equal Opportunity Employer. We encourage all small and minority owned firms and women's business enterprises to apply.

Any person with disabilities requiring special accommodations must contact the City of Joplin – Department of Public Works no later than 7 days prior to the bid opening.

PLEASE CHECK THIS BID REQUEST REGULARLY TO CHECK FOR ADDENDUMS OR OTHER UPDATES.

Publication Date/Time:
7/30/2015 6:00 PM
Publication Information:
Joplin Globe and City Website
Closing Date/Time:
8/27/2015 2:00 PM
Submittal Information:
602 S. Main, Joplin, MO 64801 4th Flr. Attn: Tony Robyn
Bid Opening Information:
8/27/2015, 2:00 PM
Related Documents:
Joplin Public Park Addendum - 1
Joplin Public Park Addendum-2
Joplin Public Park Addendum 3
Joplin Public Park Addendum - 4
Joplin Public Park Addendum - 5

Return To Main Bid Postings Page



THE JOPLIN GLOBE
PO BOX 7
JOPLIN MO 64802-0007
(417)623-3480

ORDER CONFIRMATION

Salesperson: SHARON FITZJOHN — Printed at 07/31/15 11:56 by sfitz

---

Acct #: 4186 — Ad #: 814541 — Status: N

CITY OF JOPLIN
FINANCE DEPARTMENT
602 S MAIN STREET
JOPLIN MO 64801

Start: 08/02/2015 — Stop: 08/02/2015
Times Ord: 1 — Times Run: ***
STD 1.00 X 7.10 — Words: 381
Total STD 7.25
Class: 147 LEGALS
Rate: LD — Cost: 346.19
Affidavits: 1

Contact: ROCHELLE FORSYTHE
Phone: (417)624-0820
Fax#: (417)624-4620
Email: LDunn@Joplinmo.org
Agency:

Ad Descrpt: LEGAL 017/PARK BID
Given by: *
Created: sfitz 07/31/15 09:06
Last Changed: sfitz 07/31/15 11:55

PUB	ZONE	EDT	TP	START	INS	STOP	SMTWTFS
JG	A	97	S	08/02			
INET	A	10	S	08/02			

AUTHORIZATION

Thank you for advertising in The Joplin Globe, our related publications and online properties. If you are advertising in The Joplin Globe classifieds, your ad will begin running on the start date noted above.

Please be sure to check your ad proof for any corrections. Although we are happy to make corrections during our regular business hours, you are responsible for checking your ad proof prior to the publish date. Also, we reserve the right to edit or reclassify your ad to better serve buyers and sellers.

We appreciate your business.

_____ _____

Name (print or type) — Name (signature)

(CONTINUED ON NEXT PAGE)

THE JOPLIN GLOBE
PO BOX 7
JOPLIN MO 64802-0007
(417)623-3480

ORDER CONFIRMATION (CONTINUED)

Salesperson: SHARON FITZJOHN Printed at 07/31/15 11:56 by sfitz

---

Acct #: 4186 Ad #: 814541 Status: N

(First Published August 2, 2015)
ADVERTISEMENT FOR BID

Bids will be accepted by the City of Joplin- Department of Planning, Development and Neighborhood Services, at 602 S. Main Street, 4th Floor, Joplin, MO 64801 until 2 pm, CST, on August 27, 2015, for the "JOPLIN PUBLIC PARK" #2015-011, Attn; Tony Robyn.

Notice to Contractors #2015-011.

The City of Joplin ("the City"), Missouri has received funds from the Department of Housing and Urban Development (HUD) through the Community Development Block GrantDisaster Recovery Program (CDBG-DR). Joplin Public Park, a passive recreational 17+ acre park will consist of demolition of existing site features, parking, loop trail development, lighting, earthmoving, landscape enhancements, site utilities, creation of a lake and onsite storm water management, and support features including restrooms, shelters, and various site furnishings.

Plans and Specifications may be obtained by directing your inquiry to Derek Don (derekd@swtdesign.com). In the subject line indicate "Joplin Public Park Request for Drawings and Specifications." The requester will be granted a link to an FTP site to download the drawings and specifications.

A mandatory pre-bid meeting and walk-through for all prime bidders will be held at Joplin City Hall, 5th Floor at 10 am, CST, on August 11, 2015.

The City of Joplin hereby notifies all bidders that it will affirmatively ensure that in any contract entered into pursuant to this advertisement, disadvantaged business enterprises will be afforded full opportunity to submit bids in response to this invitation and will not be discriminated against on the grounds of race, color, or national origin in consideration for an award.

For questions contact Derek Don with SWT Design via email at derekd@swtdesign.com and copy CDBG-RFP@joplinmo.org.

Note: All labor shall be paid no less than Missouri Prevailing Wage in accordance with the Federal Davis-Bacon Act (Title 40 U.S.C. Chapter 31, subchapter IV), for heavy construction projects or whichever is higher.

The City of Joplin is an Equal Opportunity Employer. We encourage all small and minority owned firms and women's business enterprises to apply.

Any persons with disabilities requiring special accommodations must contact the City of Joplin Department of Public Works no later than 7 days prior to the bid opening.

The City of Joplin reserves the right to reject any or all bids.

Tony Robyn
Assistant Director
Planning, Development
& Neighborhood Services

(017)

SECTION 009113 – **ADDENDA #1**

PART 1 - Addenda

1.1 PROJECT INFORMATION

A. Project Name: Joplin Public Park.

B. Owner: City of Joplin, MO.

C. Owner Project Number: 2015-011.

D. Landscape Architect: SWT Design.

E. Architect Project Number: 220288.01.

F. Date of Addendum: August, 6, 2015.

1.2 NOTICE TO BIDDERS

A. This Addendum is issued to all registered plan holders pursuant to the Instructions to Bidders and Conditions of the Contract. This Addendum serves to clarify, revise, and supersede information in the Project Manual, Drawings, and previously issued Addenda. Portions of the Addendum affecting the Contract Documents will be incorporated into the Contract by enumeration of the Addendum in the Owner/Contractor Agreement.

B. The Bidder shall acknowledge receipt of this Addendum in the appropriate space on the Bid Form.

C. The date for receipt of bids is unchanged by this Addendum, at same time and location.

1. Bid Date: August 27, 2015.

1.3 ATTACHMENTS

A. This Addendum includes no attachments.

1.1 CLARIFICATIONS

A. There are a total of five (5) interpretive signs, detail E / L502. Locations to be field located and coordinated with owner during construction. Size, material, and finish noted on detail.

B. The chimney swift tower, detail H / L502 is 8'-0" tall from grade.

C. **[Q:]** Alternate #1&2 states that base bid will include concrete walks and paving, sheet S103 indicates that concrete slab is by others. **[A:]** By others indicates by general contractor or

SECTION 012300 - ALTERNATES

PART 1 - GENERAL

1.1 RELATED DOCUMENTS

A. Drawings and general provisions of the Contract, including General and Supplementary Conditions and other Division 01 Specification Sections, apply to this Section.

1.2 SUMMARY

A. Section includes administrative and procedural requirements for alternates.

1.3 DEFINITIONS

A. Alternate: An amount proposed by bidders and stated on the Bid Form for certain work defined in the bidding requirements that may be added to or deducted from the base bid amount if Owner decides to accept a corresponding change either in the amount of construction to be completed or in the products, materials, equipment, systems, or installation methods described in the Contract Documents.

1. Alternates described in this Section are part of the Work only if enumerated in the Agreement.
2. The cost or credit for each alternate is the net addition to or deduction from the Contract Sum to incorporate alternate into the Work. No other adjustments are made to the Contract Sum.

1.4 PROCEDURES

A. Coordination: Revise or adjust affected adjacent work as necessary to completely integrate work of the alternate into Project.

1. Include as part of each alternate, miscellaneous devices, accessory objects, and similar items incidental to or required for a complete installation whether or not indicated as part of alternate.

B. Notification: Immediately following award of the Contract, notify each party involved, in writing, of the status of each alternate. Indicate if alternates have been accepted, rejected, or deferred for later consideration. Include a complete description of negotiated revisions to alternates.

C. Execute accepted alternates under the same conditions as other work of the Contract.

D. Schedule: A schedule of alternates is included at the end of this Section. Specification Sections referenced in schedule contain requirements for materials necessary to achieve the work described under each alternate.

PART 2 - PRODUCTS (Not Used)

PART 3 - EXECUTION

3.1 SCHEDULE OF ALTERNATES

A. Alternate No. 1: 10' Sidewalk along 26th St.

1. Base Bid: Connection to corner of 26th St. and McClelland."
2. 4" thick concrete, 10' wide walk along remainder of 26th St. as indicated on the drawings.

B. Alternate No. 2: Large Shelter

1. Base Bid: Install concrete walk and paving, drinking fountain, flagstones in the water, and boulder work along lake edge as indicated on Sheet L102 – Materials and Notes Area B.
2. Alternate: Add shelter, footings, and electrical/lighting as indicated on Sheet L530, L531 – Large Shelter (Alternate 1) and as specified in Section 033000 "Cast-In-Place Concrete" and "Division 26 – Electrical Specifications."

C. Alternate No. 3: Pedestrian Lighting

1. Base Bid: Install conduit for all pedestrian light poles as indicated on Sheet E101 – E103 Electrical Site Plan Area A-C.
2. Alternate: Add light poles, fixtures, and foundations as indicated on Sheet E101-E103 and as specified in Section "260526 Grounding and Bonding for Electrical Systems," "260529 Hangers and Supports for Electrical Systems," and "265600 Exterior Lighting."

D. Alternate No. 4: Small Shelter.

1. Base Bid: Install concrete walk and drinking fountain as indicated on Sheet L101 – Materials and Notes Area A.
2. Alternate: Add shelter, footings, and electrical lighting as indicated on Sheet and as specified in Section 033000 "Cast-In-Place Concrete" and "Division 26 – Electrical Specifications."

E. Alternate No. 5: Boardwalk.

1. Alternate: Add PermaTrak Boardwalk, associated footings, and boulders as indicated on Sheet L550 and as specified in Section 033000 "Cast-In-Place Concrete" and Appendix D specifications and Appendix B (Geotechnical Report).

F. Alternate No. 6: Council Ring.

1. Base Bid: Install sod as specified in Section 329200 "Turf & Grasses."
2. Alternate: Deduct sod, add boulder steps, flagstone, boulder seat walls, boulder wall at edge of lake and flagstone in water as indicated on Sheet L560 "Council Ring Alternate 4" and as specified in Section 321400 "Unit Paving" and 323223 "Segmental Retaining Walls."

G. Alternate No. 7: Pine Savanna Seed Mix

1. Base Bid: Install turf seed in all areas indicated on Sheet L153 "Seed/Sod Planting Plan Area C and as specified in Section 329200 "Turf & Grasses."

2. Add Pine Savanna Seed Mix in areas indicated on L153 "Seed/Sod Planting Plan Area C and as specified in Section 329200 "Turf & Grasses."

H. Alternate No. 8: Short Grass Prairie Seed Mix

1. Base Bid: Install turf seed in all areas indicated on Sheets L151-153 "Seed/Sod Planting Plan Area A-C and as specified in Section 329200 "Turf & Grasses."
2. Alternate: Add Short Grass Prairie Seed Mix in areas indicated on L151-L153 "Seed/Sod Planting Plan Area A-C and as specified in Section 329200 "Turf & Grasses."

I. Alternate No. 9: Base Bid Native Landscape Establishment and Maintenance

1. Base Bid: Establishment and maintenance services until issuance of Substantial Completion and as specified in Section 329200 "Turf & Grasses."
2. Alternate: Provide cost for three year period to maintain and establish Meadow and Short Grass Prairie in areas indicated on L151-L153 "Seed/Sod Planting Plan Area A-C" and as specified in Section 329200 "Turf & Grasses."

J. Alternate No. 10: Pine Savanna Establishment and Maintenance

1. Base Bid: none.
2. Alternate: Provide cost for three year period to maintain and establish Pine Savanna mix in areas indicated o L153 "Seed/Sod Planting Plan Area C" and as specified in Section 329200 "Turf & Grasses."

K. Alternate No. 11: Short Grass Prairie Establishment and Maintenance

1. Base Bid: none.
2. Alternate: Provide cost for three year period to maintain and establish Short Grass Prairie in areas indicated on L151-L153 "Seed/Sod Planting Area A-C" and as specified in Section 329200 "Turf & Grasses."

END OF SECTION 012300

SECTION 009113 - **ADDENDA #3**

PART 1 - Addenda

1.1 PROJECT INFORMATION

A. Project Name: Joplin Public Park.

B. Owner: City of Joplin, MO.

C. Owner Project Number: 2015-011.

D. Architect: SWT Design.

E. Architect Project Number: 220288.01.

F. Date of Addendum: August 18, 2015.

1.2 NOTICE TO BIDDERS

A. This Addendum is issued to all registered plan holders pursuant to the Instructions to Bidders and Conditions of the Contract. This Addendum serves to clarify, revise, and supersede information in the Project Manual, Drawings, and previously issued Addenda. Portions of the Addendum affecting the Contract Documents will be incorporated into the Contract by enumeration of the Addendum in the Owner/Contractor Agreement.

B. The Bidder shall acknowledge receipt of this Addendum in the appropriate space on the Bid Form.

C. The date for receipt of bids is unchanged by this Addendum, at same time and location.

1. Bid Date: August 27, 2015.

1.3 ATTACHMENTS

A. This Addendum includes the following attached Documents:
1. Exhibit A: Questions and answers received since Addendum #2 was issued.
2. Exhibit B: Questions and answers that were not answered as part of Addendum #2.

B. This Addendum includes the following attached Specification Sections:
1. Exhibit C: Section 004323 Alternate Form, dated August 18, 2015, (reissued).
2. Exhibit D: Section 012300 Alternates, dated August 18, 2015, (reissued).

C. This Addendum includes the following attached Drawing Sheets, Exhibit E:
1. Civil Sheets; D100, D102, D103, dated August 18, 2015 (reissued).
2. Electrical Sheets; E100, E102, E103, E500, E600, dated August 18, 2015 (reissued).

1.4 REVISIONS TO DIVISION 00 PROCUREMENT REQUIREMENTS AND CONTRACTING REQUIREMENTS

A. Document 004323 Alternates Form.

1. Paragraph 1.3, Items C, D, E, and F.

2. Paragraph1.4, Alternates were renumbered to reflect Alternates 0012300.

1.5 REVISIONS TO DIVISION 01 GENERAL REQUIREMENTS

A. Specification Section 012300 Alternates.

1. Paragraph 3.1, Alternates were renumbered to reflect prioritized order of acceptance.

1.6 CLARIFICATIONS

A. Soils Remediation:

1. Appendix C – Soils Investigation by Kent and Associates, Section 4.1.
   a. Contaminated soils do not need to be excavated and transported to the EPA designated soils repository.
   b. Per Jasper County Environmental Contamination Ordinance Appendix A Soils allows for remediation with 12" of clean soils in place only if disturbed.
   c. Proposed grading plan reflects the 12" of soil in these areas.
   d. No excavation and hauling of contaminated soils to the EPA designated repository is anticipated in the project scope of services.

B. Unit Prices:

1. Per Specification Section 012200 Unit Prices, Paragraph 1.4, unit prices include all necessary material, plus cost for delivery, installation, insurance, applicable taxes, overhead, and profit.
2. Specification Sections 004322.00 and 004322.01 require unit prices to be provided.

END OF SECTION 009113

EXHIBIT A

QUESTIONS AND ANSWERS SINCE ADDENDUM #2

JOPLIN PUBLIC PARK

QUESTIONS / ANSWERS

1. **Q:** In regards to the Pedestrian Lighting Alternate (now #3, see 012300 Alternates), are the light pole bases part of the base bid? If pedestrian lighting pole bases are not part of the base bid, are we to put junction boxes near every type A pole base?
   A: Section 012300 defines the pedestrian lighting alternate as the installation of the light poles, foundations, and wiring. Junction boxes are not to be installed at each pole location in base bid, only conduit stubbed to each location.

2. **Q:** Is there a preference on seed vendors for the native live seed?
   A: No preference on vendor, but seed should be sourced from within the ecoregion, approximately 180 mile radius.

EXHIBIT B

PRE-BID MEETING QUESTIONS AND ANSWERS NOT ANSWERED AS PART OF ADDENDUM #2

JOPLIN PUBLIC PARK

PRE-BID MEETING

QUESTIONS / ANSWERS / CLARIFICATIONS NOT ADDRESSED IN ADDENDUM #2
August 11, 2015
10:00am @ Joplin City Hall, 5th Floor

6. **Q:** Is there an alternate approach from what is referenced in the geotechnical report?
A: See geotechnical report for details.

8: **Q:** Can we use PEB's in lieu of PGA's for the irrigation system?
A: PEB's would be acceptable in lieu of PGA's, but base scope still includes PGA's.

12: **Q:** Who will be responsible for paying the utility tap fee?
A: General Contractor will be responsible.

15: **Q:** Is it anticipated for there to excavation of bedrock?
A: Results of subsurface conditions are in the geotechnical report.

EXHIBIT C

004323 ALTERNATE FORM

SECTION 004323 - ALTERNATES FORM

PART 1 - Alternates Form

1.1 BID INFORMATION

A. Bidder: _____.

B. Project Name: Joplin Public Park.

C. Project Location: Southeast corner of 26th St. and McClelland Blvd., Joplin, MO.

D. Owner: City of Joplin, MO.

E. Owner Project Number: 2015-011.

F. Landscape Architect: SWT Design.

G. Landscape Architect Project Number: 20288.01.

1.2 BID FORM SUPPLEMENT

A. This form is required to be attached to the Bid Form.

1.3 DESCRIPTION

A. The undersigned Bidder proposes the amount below be added to or deducted from the Base Bid if particular alternates are accepted by Owner. Amounts listed for each alternate include costs of related coordination, modification, or adjustment.

B. If the alternate does not affect the Contract Sum, the Bidder shall indicate "NO CHANGE."

~~C. If the alternate does not affect the Work of this Contract, the Bidder shall indicate "NOT APPLICABLE."~~

D. The Bidder shall be responsible for determining from the Contract Documents the effects of each alternate on the ~~Contract Time and the~~ Contract Sum.

E. Owner will accept alternates in the order indicated, and reserves the right to award or amend the Contract accordingly within [**90**] days of the Notice of Award unless otherwise indicated in the Contract Documents.

F. Acceptance or non-acceptance of any alternates by the Owner shall have no effect on the Contract Time ~~unless the "Schedule of Alternates" Article below provides a formatted space for the adjustment of the Contract Time~~.

1.4 SCHEDULE OF ALTERNATES

A. Alternate No. 1: 10' Sidewalk along 26th St:

1. ADD____ DEDUCT____ NO CHANGE____ NOT APPLICABLE____.

2. _____ Dollars ($_____).

B. Alternate No. 2: Large Shelter:

1. ADD____ DEDUCT____ NO CHANGE____ NOT APPLICABLE____.

2. _____ Dollars ($_____).

C. Alternate No. 3: Pedestrian Lighting:

1. ADD____ DEDUCT____ NO CHANGE____ NOT APPLICABLE____.

2. _____ Dollars ($_____).

D. Alternate No. 4: Boardwalk:

1. ADD____ DEDUCT____ NO CHANGE____ NOT APPLICABLE____.

2. _____ Dollars ($_____).

E. Alternate No. 5: Small Shelter:

1. ADD____ DEDUCT____ NO CHANGE____ NOT APPLICABLE____.

2. _____ Dollars ($_____).

F. Alternate No. 6: Council Ring:

1. ADD____ DEDUCT____ NO CHANGE____ NOT APPLICABLE____.

2. _____ Dollars ($_____).

G. Alternate No. 7: Pine Savanna Seed Mix:

1. ADD____ DEDUCT____ NO CHANGE____ NOT APPLICABLE____.

2. _____ Dollars ($_____).

H. Alternate No. 8: Short Grass Prairie Seed Mix:

1. ADD____ DEDUCT____ NO CHANGE____ NOT APPLICABLE____.

2. _____ Dollars ($_____).

I. Alternate No. 9: Base Bid Native Landscape Establishment and Maintenance:

1. ADD____ DEDUCT____ NO CHANGE____ NOT APPLICABLE____.

2. _____ Dollars ($_____).

J. Alternate No. 10: Pine Savanna Establishment and Maintenance:

1. ADD____ DEDUCT____ NO CHANGE____ NOT APPLICABLE____.

2. _____ Dollars ($_____).

K. Alternate No. 11: Short Grass Prairie Establishment and Maintenance:

1. ADD____ DEDUCT____ NO CHANGE____ NOT APPLICABLE____.

2. _____ Dollars ($_____).

1.5 SUBMISSION OF BID SUPPLEMENT

A. Respectfully submitted this ____ day of _____, 2015.

B. Submitted By:_____(Insert name of bidding firm or corporation).

C. Authorized Signature:_____(Handwritten signature).

D. Signed By:_____(Type or print name).

E. Title:_____(Owner/Partner/President/Vice President).

END OF SECTION 004323

EXHIBIT D

012300 ALTERNATES

SECTION 012300 - ALTERNATES

PART 1 - GENERAL

1.1 RELATED DOCUMENTS

A. Drawings and general provisions of the Contract, including General and Supplementary Conditions and other Division 01 Specification Sections, apply to this Section.

1.2 SUMMARY

A. Section includes administrative and procedural requirements for alternates.

1.3 DEFINITIONS

A. Alternate: An amount proposed by bidders and stated on the Bid Form for certain work defined in the bidding requirements that may be added to or deducted from the base bid amount if Owner decides to accept a corresponding change either in the amount of construction to be completed or in the products, materials, equipment, systems, or installation methods described in the Contract Documents.

1. Alternates described in this Section are part of the Work only if enumerated in the Agreement.
2. The cost or credit for each alternate is the net addition to or deduction from the Contract Sum to incorporate alternate into the Work. No other adjustments are made to the Contract Sum.

1.4 PROCEDURES

A. Coordination: Revise or adjust affected adjacent work as necessary to completely integrate work of the alternate into Project.

1. Include as part of each alternate, miscellaneous devices, accessory objects, and similar items incidental to or required for a complete installation whether or not indicated as part of alternate.

B. Notification: Immediately following award of the Contract, notify each party involved, in writing, of the status of each alternate. Indicate if alternates have been accepted, rejected, or deferred for later consideration. Include a complete description of negotiated revisions to alternates.

C. Execute accepted alternates under the same conditions as other work of the Contract.

D. Schedule: A schedule of alternates is included at the end of this Section. Specification Sections referenced in schedule contain requirements for materials necessary to achieve the work described under each alternate.

PART 2 - PRODUCTS (Not Used)

PART 3 - EXECUTION

3.1 SCHEDULE OF ALTERNATES

A. Alternate No. 1: 10' Sidewalk along 26th St.

1. Base Bid: Connection to corner of 26th St. and McClelland."
2. 4" thick concrete, 10' wide walk along remainder of 26th St. as indicated on the drawings.

B. Alternate No. 2: Large Shelter

1. Base Bid: Install concrete walk and paving, drinking fountain, flagstones in the water, and boulder work along lake edge as indicated on Sheet L102 – Materials and Notes Area B.
2. Alternate: Add shelter, footings, and electrical/lighting as indicated on Sheet L530, L531 – Large Shelter (Alternate 1) and as specified in Section 033000 "Cast-In-Place Concrete" and "Division 26 – Electrical Specifications."

C. Alternate No. 3: Pedestrian Lighting

1. Base Bid: Install conduit for all pedestrian light poles as indicated on Sheet E101 – E103 Electrical Site Plan Area A-C.
2. Alternate: Add light poles, fixtures, and foundations as indicated on Sheet E101-E103 and as specified in Section "260526 Grounding and Bonding for Electrical Systems," "260529 Hangers and Supports for Electrical Systems," and "265600 Exterior Lighting."

D. Alternate No. 4: Boardwalk.

1. Alternate: Add PermaTrak Boardwalk, associated footings, and boulders as indicated on Sheet L550 and as specified in Section 033000 "Cast-In-Place Concrete" and Appendix D specifications and Appendix B (Geotechnical Report).

E. Alternate No. 5: Small Shelter.

1. Base Bid: Install concrete walk and drinking fountain as indicated on Sheet L101 – Materials and Notes Area A.
2. Alternate: Add shelter, footings, and electrical lighting as indicated on Sheet and as specified in Section 033000 "Cast-In-Place Concrete" and "Division 26 – Electrical Specifications."

F. Alternate No. 6: Council Ring.

1. Base Bid: Install sod as specified in Section 329200 "Turf & Grasses."
2. Alternate: Deduct sod, add boulder steps, flagstone, boulder seat walls, boulder wall at edge of lake and flagstone in water as indicated on Sheet L560 "Council Ring Alternate 4" and as specified in Section 321400 "Unit Paving" and 323223 "Segmental Retaining Walls."

G. Alternate No. 7: Pine Savanna Seed Mix

1. Base Bid: Install turf seed in all areas indicated on Sheet L153 "Seed/Sod Planting Plan Area C and as specified in Section 329200 "Turf & Grasses."

2. Add Pine Savanna Seed Mix in areas indicated on L153 "Seed/Sod Planting Plan Area C and as specified in Section 329200 "Turf & Grasses."

H. Alternate No. 8: Short Grass Prairie Seed Mix

1. Base Bid: Install turf seed in all areas indicated on Sheets L151-153 "Seed/Sod Planting Plan Area A-C and as specified in Section 329200 "Turf & Grasses."
2. Alternate: Add Short Grass Prairie Seed Mix in areas indicated on L151-L153 "Seed/Sod Planting Plan Area A-C and as specified in Section 329200 "Turf & Grasses."

I. Alternate No. 9: Base Bid Native Landscape Establishment and Maintenance

1. Base Bid: Establishment and maintenance services until issuance of Substantial Completion and as specified in Section 329200 "Turf & Grasses."
2. Alternate: Provide cost for three year period to maintain and establish Meadow and Short Grass Prairie in areas indicated on L151-L153 "Seed/Sod Planting Plan Area A-C" and as specified in Section 329200 "Turf & Grasses."

J. Alternate No. 10: Pine Savanna Establishment and Maintenance

1. Base Bid: none.
2. Alternate: Provide cost for three year period to maintain and establish Pine Savanna mix in areas indicated o L153 "Seed/Sod Planting Plan Area C" and as specified in Section 329200 "Turf & Grasses."

K. Alternate No. 11: Short Grass Prairie Establishment and Maintenance

1. Base Bid: none.
2. Alternate: Provide cost for three year period to maintain and establish Short Grass Prairie in areas indicated on L151-L153 "Seed/Sod Planting Area A-C" and as specified in Section 329200 "Turf & Grasses."

END OF SECTION 012300

EXHIBIT E

DRAWING SHEETS

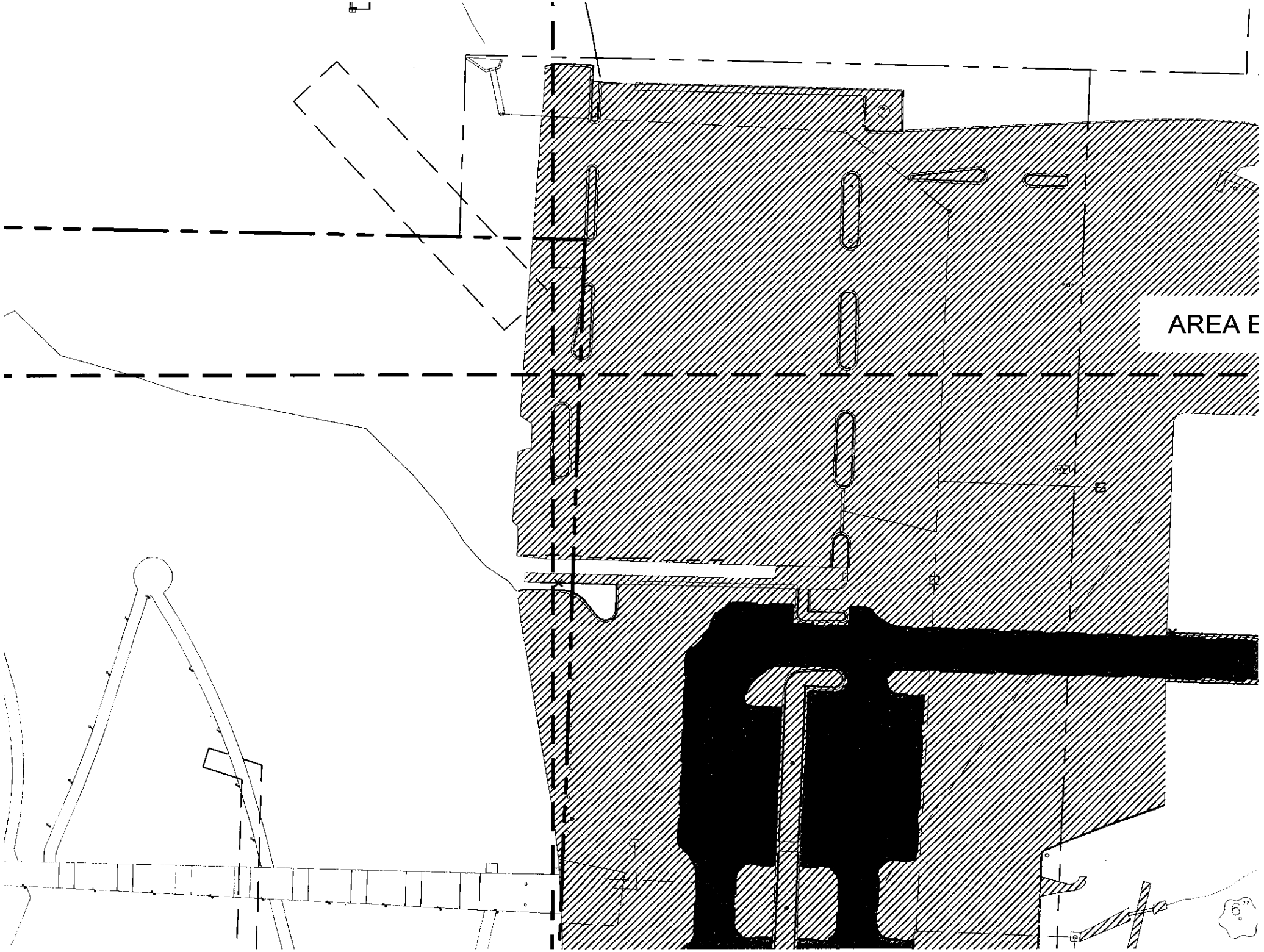
AREA E

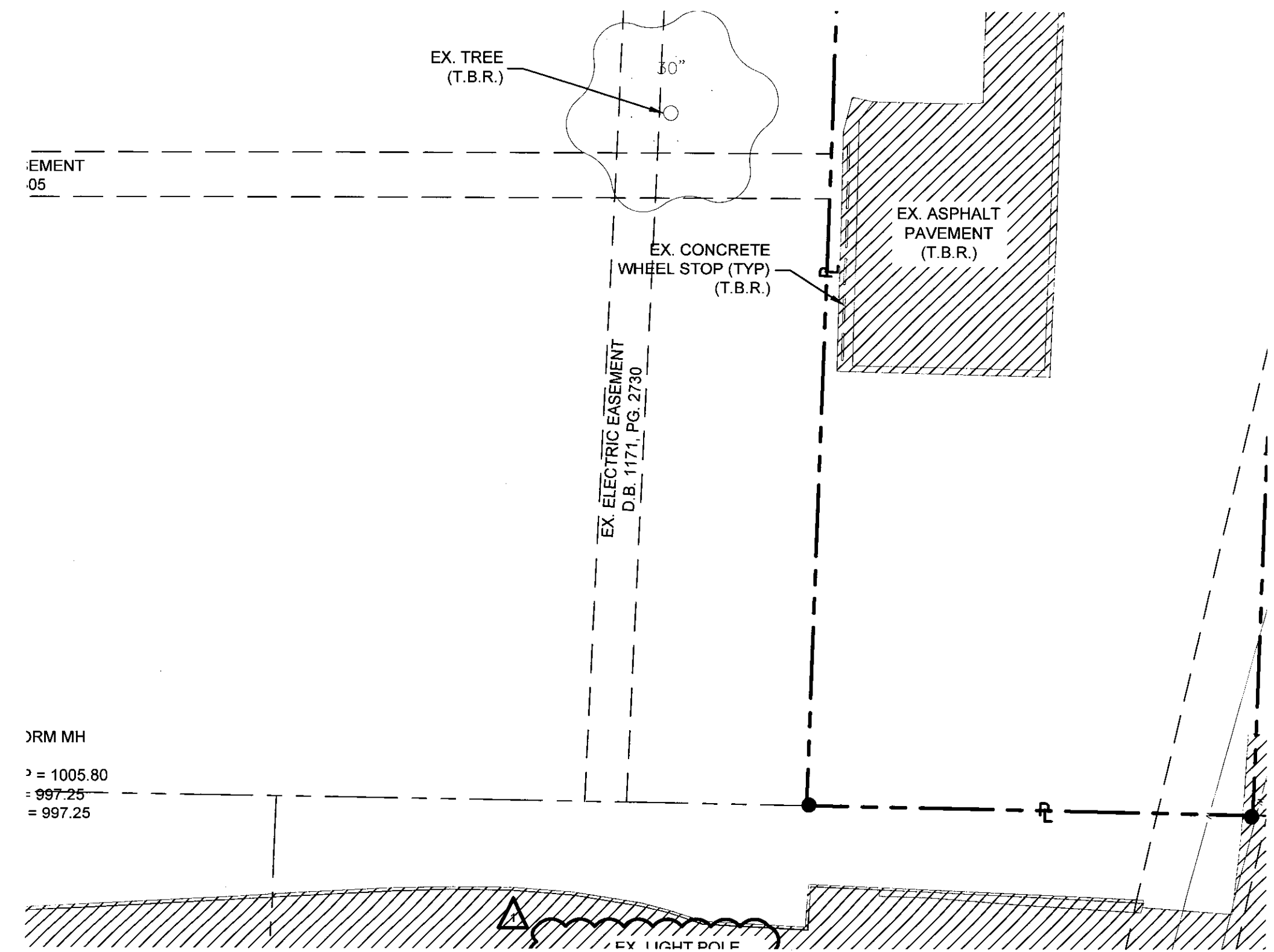
EX. TREE
(T.B.R.)
30"
EMENT
05
EX. CONCRETE
WHEEL STOP (TYP)
(T.B.R.)
EX. ASPHALT
PAVEMENT
(T.B.R.)
EX. ELECTRIC EASEMENT
D.B. 1171, PG. 2730
ORM MH
= 1005.80
= 997.25
= 997.25
EX. LIGHT POLE

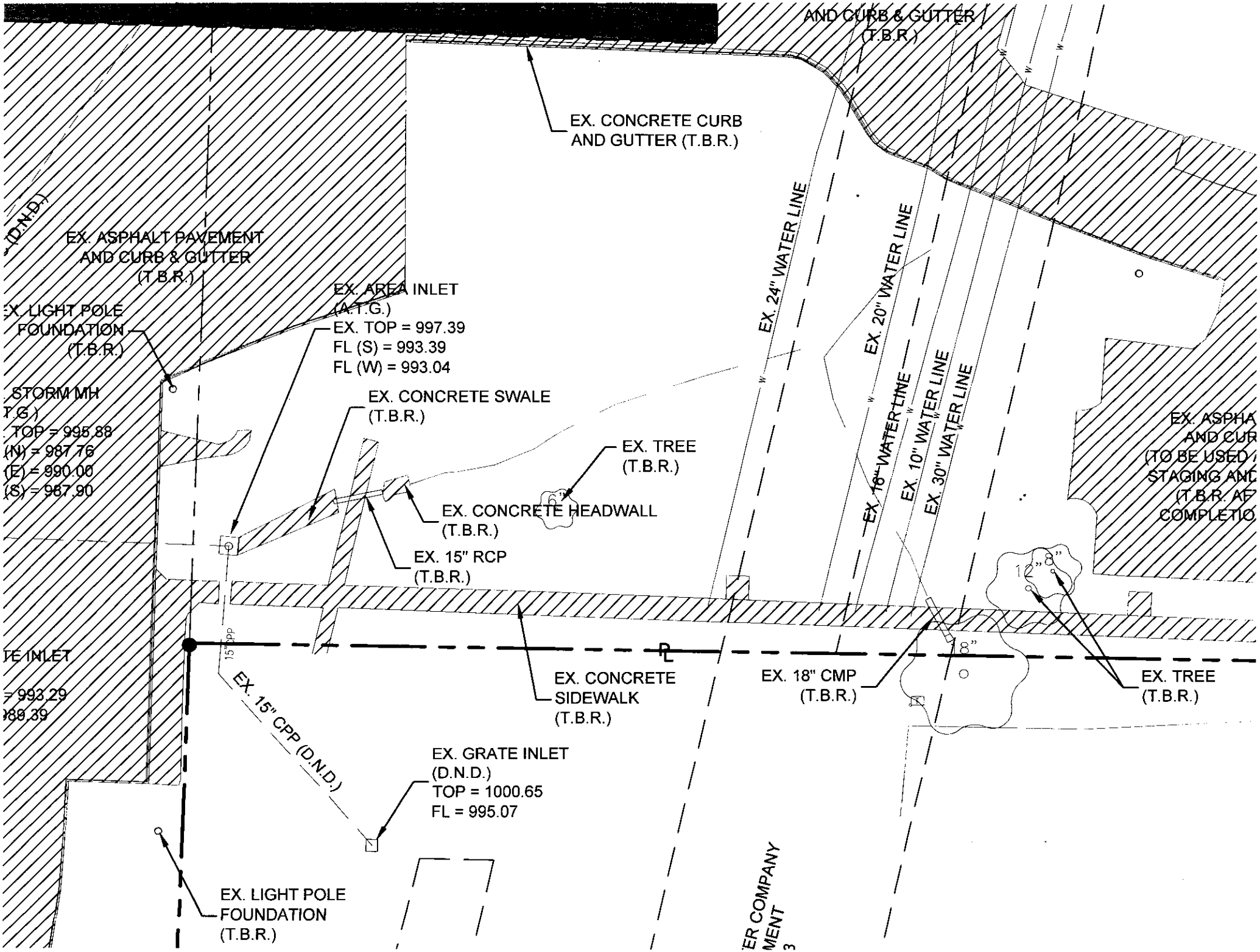
AND CURB & GUTTER
(T.B.R.)
EX. CONCRETE CURB
AND GUTTER (T.B.R.)
EX. ASPHALT PAVEMENT
AND CURB & GUTTER
(T.B.R.)
EX. AREA INLET
(A.T.G.)
EX. TOP = 997.39
FL (S) = 993.39
FL (W) = 993.04
EX. LIGHT POLE
FOUNDATION
(T.B.R.)
EX. CONCRETE SWALE
(T.B.R.)
EX. TREE
(T.B.R.)
EX. CONCRETE HEADWALL
(T.B.R.)
EX. 15" RCP
(T.B.R.)
EX. 24" WATER LINE
EX. 20" WATER LINE
EX. 16" WATER LINE
EX. 10" WATER LINE
EX. 30" WATER LINE
EX. 15" CPP (D.N.D.)
EX. CONCRETE
SIDEWALK
(T.B.R.)
EX. 18" CMP
(T.B.R.)
EX. TREE
(T.B.R.)
EX. GRATE INLET
(D.N.D.)
TOP = 1000.65
FL = 995.07
EX. LIGHT POLE
FOUNDATION
(T.B.R.)

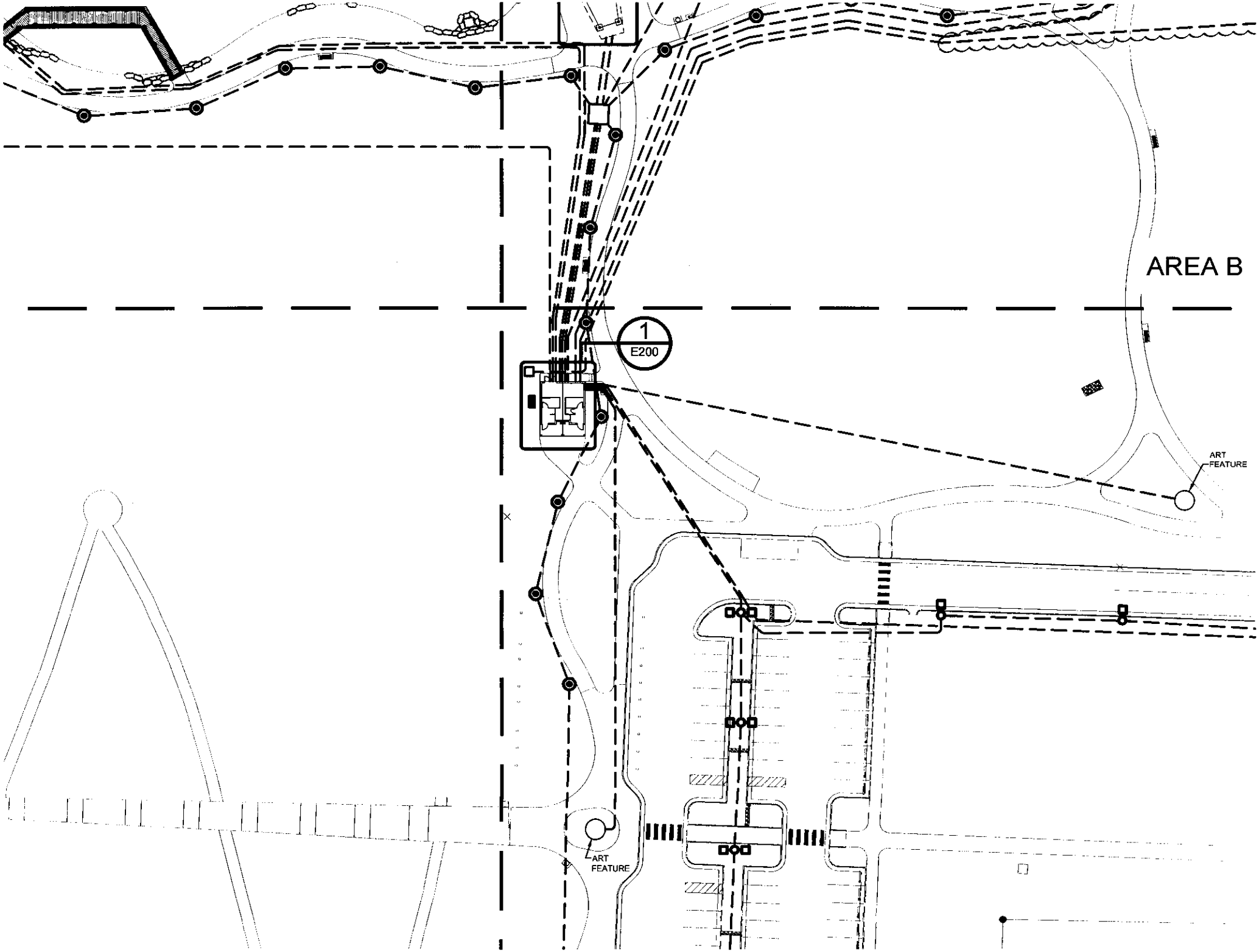
AREA B
1
E200
ART
FEATURE
ART
FEATURE

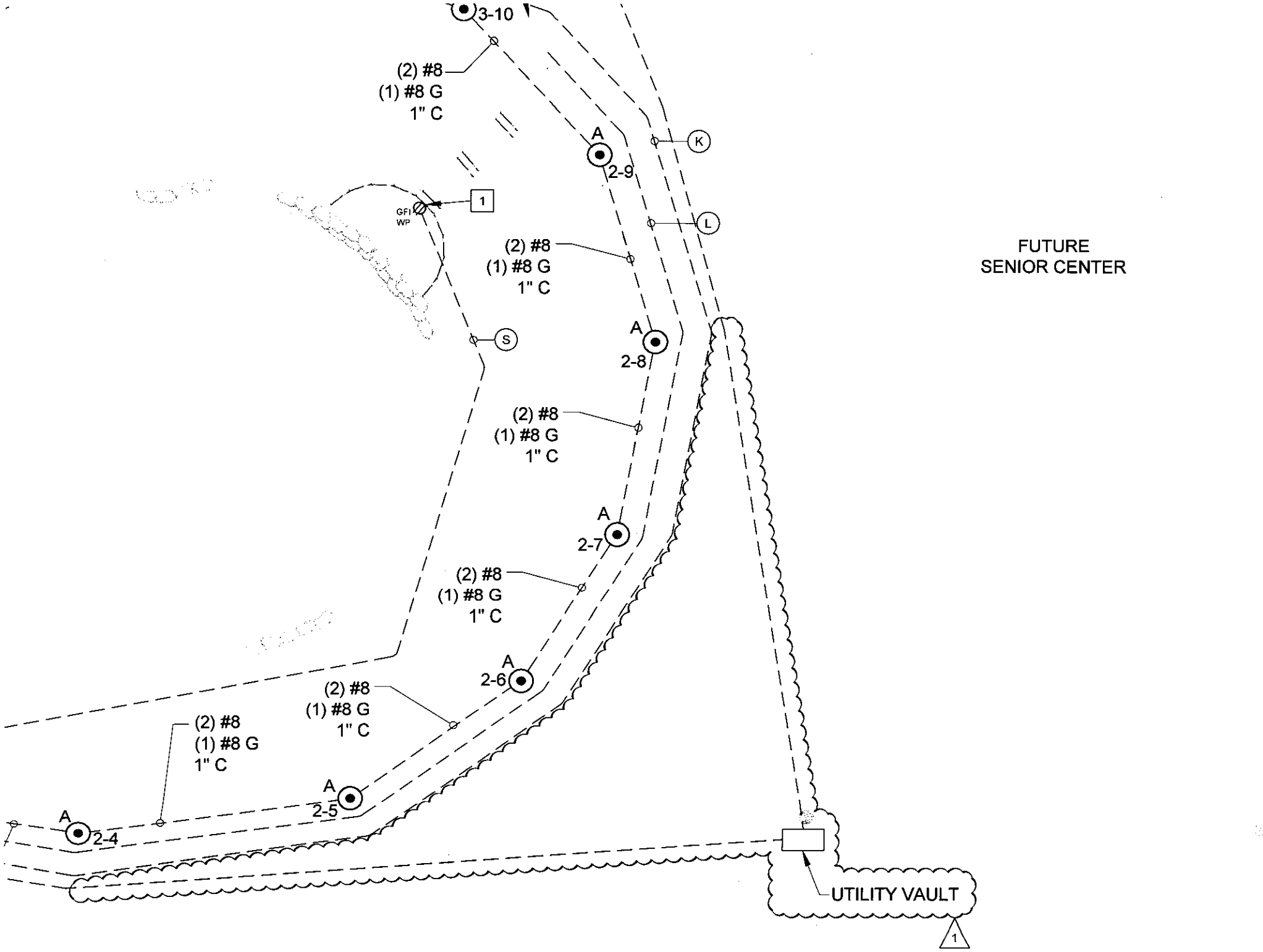
3-10
(2) #8
(1) #8 G
1" C
A
2-9
K
L
1
GFI
WP
(2) #8
(1) #8 G
1" C
FUTURE
SENIOR CENTER
S
A
2-8
(2) #8
(1) #8 G
1" C
A
2-7
(2) #8
(1) #8 G
1" C
A
2-6
(2) #8
(1) #8 G
1" C
(2) #8
(1) #8 G
1" C
A
2-5
A
2-4
UTILITY VAULT
1

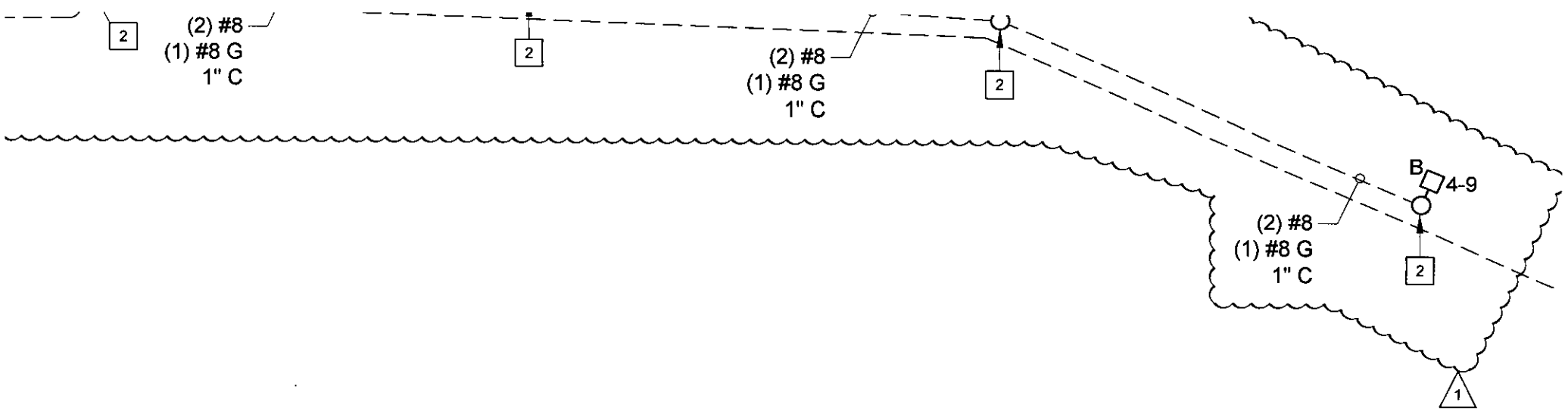
2
(2) #8
(1) #8 G
1" C
2
(2) #8
(1) #8 G
1" C
2
B
4-9
(2) #8
(1) #8 G
1" C
2
1

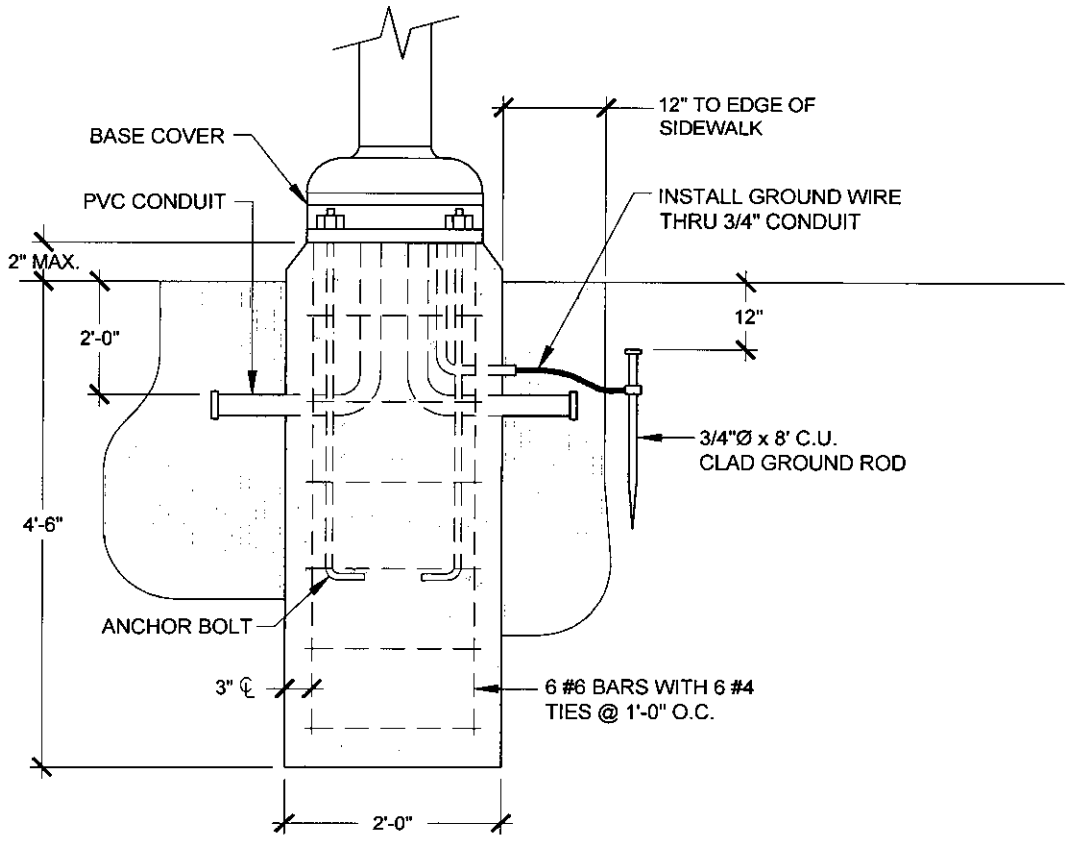

FIXTURE TYPE "A" MOUNTING DETAIL

NO SCALE

GF

NO S

RED PI

D UTILITY
ER
' - 3Ø - 4W

DISCONNECT AND [8] (1)
ENCLOSURE

(1)
' COPPER CAD
JND ROD
LECT. CONTRACTOR)

G. 2" C.

ER 'T-1'

' - 3Ø - 4W.

AM

LIGHTIN

	MARK	FIXTURE		VOLT.	INPUT	LAMP		MOUNTING	
		TYPE	DIFFUSER		WATTS	# & WATTS	TYPE	TYPE	HT.
[6]	A	PEDESTRIAN	ACRYLIC	277	24	1-24	LED	POLE	12'-0"
	B	PARKING LOT		480	486	1-400	MH	POLE	
	C	WALL PACK	ACRYLIC	277	185	1-150	MH	WALL	
	D	INDUSTRIAL	ACRYLIC	277	58	2-F32	T8	SURFACE	
[5]	E	COLUMN UPLIGHT	ACRYLIC	277	18	1-18	LED	PENDANT	
[5]	F	DOWNLIGHT	ACRYLIC	277	29	1-29	LED	PENDANT	

**ELECTRICAL CONTRACTOR IS RESPONSIBLE F

MARK	
A	
B	
C	
D	
E	
F	
G	
H	
[7] I	
[7] J	
[7] K	
[7] L	

SECTION 009113 - **ADDENDA #4**

PART 1 - Addenda

1.1 PROJECT INFORMATION

A. Project Name: Joplin Public Park.

B. Owner: City of Joplin, MO.

C. Owner Project Number: 2015-011.

D. Architect: SWT Design.

E. Architect Project Number: 220288.01.

F. Date of Addendum: August 21, 2015.

1.2 NOTICE TO BIDDERS

A. This Addendum is issued to all registered plan holders pursuant to the Instructions to Bidders and Conditions of the Contract. This Addendum serves to clarify, revise, and supersede information in the Project Manual, Drawings, and previously issued Addenda. Portions of the Addendum affecting the Contract Documents will be incorporated into the Contract by enumeration of the Addendum in the Owner/Contractor Agreement.

B. The Bidder shall acknowledge receipt of this Addendum in the appropriate space on the Bid Form.

C. The date for receipt of bids is unchanged by this Addendum, at same time and location.

1. Bid Date: August 27, 2015.

1.3 ATTACHMENTS

A. This Addendum includes the following attached Documents:
1. Exhibit A: Plan Holder List.
2. Exhibit B: Questions and Answers received since Addendum #3 was issued.

B. This Addendum includes the following attached Sheets, Exhibit C:

1. General Sheet G002, dated August 21, 2015 (reissued).
2. Landscape Sheets L101, L102, L103, dated August 21, 2015 (reissued).

C. This Addendum includes the attached Addendum Drawings, Exhibit D:

1. City Standard Detail, Type C Inlet, to supercede detail on sheet C500.
2. City Standard Detail, Pavement Repair, to supercede detail on sheet C500.

1.4 REVISIONS TO DRAWING SHEETS

A. Sheet G002- Additional Notes and Legends.

1. Revision to Material Legend.

B. Sheet L101- Materials and Notes, Area A.

1. Callout for concrete curb and gutter.

C. Sheet L102- Materials and Notes, Area B.

1. Callout for concrete curb and gutter.

D. Sheet L103- Materials and Notes, Area C.

1. Callouts for concrete curb and gutter, asphalt, wheelstop, and striping.

1.5 CLARIFICATIONS

A. SWPPP, Sheet C600:

1. The contractor, not the City, will be responsible for all documentation required by the City's SWPPP

2. The contractor will be responsible for any and all fees associated with non-compliance of those requirements.

B. Third Party Testing:

1. There will be third party testing as it relates to the construction of the lake and associated compaction.

2. Contractor to provide concrete testing.

C. Substitution Request:

1. Please note, Cameron Bridge Works, LLC is an "approved equal" for the pedestrian bridge.
   a. Design from either approved provider must match design intent provided on sheets L504 and S001.
   b. Contractor must provide signed and sealed shop drawings from either provider during the submittal process for Owner and Landscape Architect approval.

END OF SECTION 009113

EXHIBIT A

PLAN HOLDER LIST

CITY OF JOPLIN MISSOURI

SWT DESIGN

JOPLIN PUBLIC PARK

PLAN HOLDER LIST

August 21, 2015

Responses	Company	Location	Contact Name	Email	Phone Number
1	Play By Design	Tulsa, OK	Kelli Collins	playbydesigninc@gmail.com	918-851-9518
2	Audio Input, LLC	Joplin, MO	Perry Workman	pworkman@audioinput.com	417-782-2569
3	Hunter Knepshield Co.	La Grange, KY	Tom Knepshield	knepsr@gmail.com	502-225-9121
4	Blevins Asphalt Construction Co.	Mt. Vernon, MO	Jeran Cordova	jcordova@blevinsasphalt.com	417-466-3758
5	Bill's Electric, Inc.	Webb City, MO	Misty Youngblood	myoungblood@beijoplin.com	417-624-6660 ext. 239
6	Koppel Fabrication, Inc.	Sweet Springs, MO	Larry Winfrey	larry@koppelfab.com	660-335-4601
7	Crossland Construction Company	Columbus, KS	Tamara Mann	tmann@crosslandconstruction.com	620-429-1414
8	iSqFt*		Matt Knochelman	mknochelman@ISQFT.com	800-364-2059 ext. 7029
9	Tri-State Area Contractors Association	Joplin, MO	Heather Griffith	heather@tristatecontractors.net	417-627-9392
10	Jeff Asbell Excavating and Trucking, Inc.	Carl Junction, MO	Donna Blackmon	dblackmon@jeffasbell.com	
11	Big John's Heavy Equipment	Diamond, MO	Maggie Anderson	manderson@swmotm.com	417-437-0285
12	McCann Concrete Products, Inc.	Dorsey, IL	Debbie Christopher	dchristopher@mccannprecast.com	618-377-3888
13	Joplin Electrical Co., Inc.	Duenweg, MO	Jeff Cartright	jeff@joplinelectric.com	417-623-3425
14	Simply Bright Ideas	St. Charles, MO	Brian Brader	brian@simplybrightideas.com	314-718-1688
15	Wickman Gardens	Springfield, MO	Brian Bennett	brianbennett950@gmail.com	417-880-5236
16	DeWitt and Associates	Springfield, MO	Heath Dawson	hdawson@dewitt-associates.com	417-881-4820
17	Dalton-Killinger Construction Company	Joplin, MO	Mary Lou Halama	marylouhalama@daltonkillinger.com	417-624-0651
18	B&D Yardbuilders, Inc.	Joplin, MO	Lisa Keele	bndboston@cableone.net	417-623-8754
19	APAC Missouri, Inc.	Joplin, MO	David Andrews	david.andrews@apac.com	417-849-0821
20	RE Smith Construction	Joplin, MO	Dave Smith	dave@resmithconst.com	417-623-4545
21	ePlan*	Columbia, MO	Raven Webster	ravenw@eplanbidding.com	573-447-7130
22	Dodge *	IL, IN, KS, MO	Darlene Morman	darlene.morman@construction.com	847-221-2141
23	Branco Enterprises, Inc.	Neosho / Springfield, MO	Patrick Capron	PCAPRON@branco.com	417-451-5250
24	Athco, LLC	Lenexa, KS	Jason Cates	JCates@athcollc.com	913-469-5600
25	Layne Electric	Joplin, MO	Mark Layne	mark@layneelectric.com	417-782-5800
26	Construction Market Data*	Norcross, GA	Robert Canetta	robert.canetta@cmdgroup.com	630-288-7973
27	CorWorth / Restroom Facilities Ldt.	Marble Falls, TX	Shanda Miller	shanda@corworth.com	800-447-6570
28	Mid America Sports Construction	Lees Summit, MO	Nick Roth	nroth@mid-americagolf.com	816-524-0010
29	Emery Sapp & Sons, Inc.	Springfield, MO	Janet Caudillo	Janet.Caudillo@Emerysapp.com	417-833-9915
30	Baxter Farms and Nurseries	St. Louis, MO	Chistopher Ake	Chris@BaxterFarms.com	314-542-9400
31	SFP Landscaping / Native Landscape	St. Louis, MO	Charles Caverly	chuckc@sfplandscapinginc.com	314-544-7918
32	Shade-Guard	St. Louis, MO	Jerre Parsons	jerre@shade-guard.com	314-363-7637
33	Solartonic	Ann Arbor, MI	Brian Tell	brian@solartonic.com	734-418-0696
34	AB Creative	St. Louis, MO	Tony May	tony@abcreative.net	314-478-9160
35	Central Turf and Irrigation	Springfield, MO	Kent Brobst	kbrobst@centraltis.com	417-924-9696
36	Kenney Outdoor Solutions	Lenexa, KS	Korey Your	korey.york@kmcturf.com	913-449-8683
37	Branco Enterprises, Inc.	Neosho / Springfield, MO	Bruce Johnson	bjohnson@branco.com	417-451-5250
38	Wickman Gardens	Springfield, MO	Brian Bennett	brianbennett950@gmail.com	417-880-5236
39	Rooter Local 20	Kansas City			417-413-6600
40	Ashell Excavating and Trucking	Carl Junction, MO	Duane Inartick	dwartick@jeffasbell.com	417-437-0526
41	A-Y-I	Carl Junction, MO	Dan Yates	duates@a-yi.com	417-437-0206
42	RE Smith Construction		Chris Bookstaver	chris@resmithconst.com	417-439-3394
43	Carson-Mitchell		Jason Carson	jason@carson-mitchell.com	417-859-5653
44	Vaughn Dirtwork	Molett, MO	Jacob Vaughn	joulo@sbcglobal.net	417-737-1427
45	Layne Electric		Adam Layne	adam@layneelectric.com	417-782-5800
46	Dalton-Killinger Construction Company		Shane McDaniel	bidfile@daltonkillinger.com	417-624-0651
47	Emery Sapp and So.	Springfield, MO	Chris Orf	chris.orf@emerysapp.com	417-833-9915
48	Atnip Enterprise	Jasper, MO	Michael Ehrson	mikeehrsam@yahoo.com	417-525-4280

49	Paragon	Tulsa, OK	Mike Thedford	miket@paragontulsa.com	918-497-0627
50	Crossland Construction Company		Steve Houser	shouser@crosslandconstruction.com	620-429-1414
51	Southwest Traffic MO	Joplin, MO	Sid Davis	sdavis@joplin.com	417-437-0285
52	Dalton-Killinger Construction Company		Justin Underwood	bidfile@daltonkillinger.com	417-624-0651
53	GOINS Enterprises	Joplin, MO	Jim Thomason	contact@goinsent.com	417-659-6082
54	Fagan Electric	Joplin, MO	David Webb	dwebb@faganelectric.com	417-623-4848
55	Double S Dirt Works		Zac Short	zac.ssdirtworks@windstream.net	417-843-2185
56	JIE	Joplin, MO	Mike Kinmer	mike@joplinelectric.com	414-623-3425
57	Jeff Asbell Excavating and Trucking, Inc.		Rusty Snyder	rsnyder@jeffasbell.com	417-437-1195
58	BEI	Joplin, MO	Dwight Harvey	dharvey@beijoplin.com	417-621-8031
59	All Seasons	Joplin, MO	Bo Jones	jeff@joplinrockyard.com	417-206-0534
60	All Seasons	Joplin, MO	Jeff Coffey	jeff@joplinrockyard.com	417-206-0534
61	Estate Management Services	Willard, MO	Jimmy Rogers	jimmy@lakeexperts.com	417-838-8040
62	RE Smith Construction	Joplin, MO	Dave Smith	dave@resmithconst.com	417-439-4545
63	Houska, Inc.	Foristell, MO	Kevin Hoelscher	kevin@houskainc.com	636-463-2153

EXHIBIT B

QUESTIONS AND ANSWERS RECEIVED SINCE ADDENDUM #3

CITY OF JOPLIN MISSOURI

SWTDESIGN

JOPLIN PUBLIC PARK

ADDENDUM #4

QUESTIONS RECEIVED

1. **Q:** Do we need to give a proposal for a year of maintenance during the warranty period?

   A: No, upon receipt of substantial completion the maintenance is the city's requirement. Contractor is responsible for replacement during the warranty period.

2. **Q:** Do you have a Rock clause for this project? Rock spec says to see the City of Joplin Standards Spec. City Spec talks about both Unclassified, and Rock excavation. So my question is will you pay unit price as on 1.3 B Rock excavation $____ per CY?

   A: Yes

3. **Q:** At the Walk thru on site you said this was a balance site, and the concrete, and the asphalt is to be hauled off site. The dirt can stay on site. I had an outside firm do a dirt take off for this project and his report show a lot of extra dirt. Just checking that you will change the dirt finish grade to make room for this material. This makes a lot of different of the price to stay on site versus to haul it off site.

   A: There is excess cut of approximately 20,000 – 30,000 cubic yards. Placement of rubble-ized fill will not be allowed due to planned site grades. Any material hauled off-site must be disposed of or re-used in accordance with applicable local, state, and federal laws based on the material classification and volume.

4. **Q:** Section 003126 talk's about Hazzard materials. You say it can stay on site. Do we have to have our 40 hour Hazz-Mat training? The current EPA jobs we are bidding say's even the truck drivers now have to be trained. This would make the cost go up.

   A: Hazmat training is not a requirement for all the workers. The contractor should follow instructions listed in section 8.15.1 of 004113.15 General Conditions should they encounter any materials that they believe to be hazardous. Refer to Addendum #3, 1.6, A for additional information regarding soil remediation.

5. **Q:** The Bid plans say not for Construction. Do you anticipate any changes?

   A: No, documents are for bidding purposes and prior to construction a conformance set / construction set of drawings will be issued.

6. **Q:** Does the Wood fence remove on the west side of the parking lot?

   A: Yes, the wood fence is to be removed.

7. **Q:** Are handholes required where empty conduits are traveling long distances for future feeds (eg: art feature)? If so, at what distances are they required?

   A: Provide 12 x 12 hand hole in general vicinity of each future art location.

8. **Q:** Plan sheet E500, street light wiring detail reflects ¾" LFNC inserted into 1" HDPE at the pole base locations?? Is "HDPE, Cable in Duct" required between poles? The mounting details reflect PVC being installed. Need clarification.

   A: As part of the base bid, 1" PVC conduit is to be installed between the poles. Light fixtures, poles, pole bases and cable for the light fixtures shall be installed as an alternate.

9. **Q:** Plan sheet E600 keyed notes are different then the new Alternate schedule.

   A: Refer to addendum #3 for correct alternate bid item numbers.

10. **Q:** 26th street has several areas where existing drives are removed. Can't find anyplace indicating that new curb & gutter will be installed at these voids. Shts D101, D102,L101 & L102

    A: Please see Sheets G002, L101, L102, L103 that were reissued as part of this addendum.

11. **Q:** It calls on the bid form for Unit Price number 25 to have the excess soil moved to the repository. Where is the repository located?

    A: Refer to Jasper County Health Department for additional information.

12. **Q:** Can excess asphalt and concrete also be hauled off to the repository?

    A: Refer to Jasper County Health Department for additional information.

13. **Q:** On the irrigation plans, there is landscaping in all the islands, yet there isn't irrigation at the entrance island or in the bioswale island in the parking lot. Is that intentional? Should irrigation be accounted for in those two areas?

    A: Entry island to have irrigation and island in middle of parking lot will not have irrigation per drawings. Clarification will be provided.

14. **Q:** Please clarify whether the lake fountain should be a 7.5hp or 10hp model.

    A: The Aqua Master fountain should be a 7.5hp model, Crown and Geyser nozzle, with LED lighting. Each fountain should include 200' of cable, reference electrical drawings.

EXHIBIT C

DRAWING SHEETS

MATERIAL LEGEND

1. **STANDARD CONCRETE PAVING**
   4" THICK CONCRETE PAVING, LIGHT BROOM FINISH. EDGES TO BE ¾" TOOLED RADIUS. SAW CUT JOINTS. CONTRACTOR TO COORDINATE LOCATION OF ALL JOINTS WITH LANDSCAPE ARCHITECT. SEE DETAIL 'A'/L500
2. **HEAVY DUTY CONCRETE PAVING**
   6" THICK STANDARD CONCRETE. LIGHT BROOM FINISH. EDGES TO BE ½" TOOLED RADIUS. SAW CUT JOINTS. SEE DETAIL 'D'/L500
3. **SPECIAL CONCRETE PAVING**
   4" THICK COLOR CONDITIONED CONCRETE PAVING W/ EXPOSED AGGREGATE FINISH. SEE SPECIFICATIONS. SEE DETAIL 'A'/L500
4. **CONCRETE STAIRS**
   SEE DETAIL 'E'/L500
5. **NATURAL LIMESTONE LEDGEROCK WALL**
   WEATHERED NATURAL MISSOURI LIMESTONE LEDGEROCK
   SIZE: SEE SPECIFICATIONS
6. **LAKE EDGE BOULDER WALL**
   WEATHERED NATURAL MISSOURI LIMESTONE BOULDERS WITH MOSS AND LICHEN
   SIZE: SEE SPECIFICATIONS
7. **LIMESTONE LEDGEROCK SPILLWAY**
   WEATHERED NATURAL MISSOURI LIMESTONE LEDGEROCK. SEE SHEET L503 AND SPECIFICATIONS FOR ADDITIONAL INFORMATION
8. **RETRACTABLE VEHICLE BOLLARD**
   BY RELIANCE FOUNDARY
   SEE DETAILS ON SHEET L502
9. **ENTRY SIGNAGE**
   SEE DETAILS ON SHEET 'D'/L506
10. **BENCHES**
    BY LANDSCAPE FORMS
    SEE DETAILS ON SHEET 'A'/L502 AND 'A'/L507 FOR LAYOUT
11. **BIKE RACK**
    BY LANDSCAPE FORMS
    SEE DETAILS ON SHEET 'B'/L502
12. **WASTE RECEPTACLE**
    BY LANDSCAPE FORMS
    SEE DETAILS ON SHEET 'D'/L502 AND 'A'/L507
13. **LIGHT POLE**
    SEE DETAILS ON SHEET 'E'/L502
14. **FOUNTAIN**
    AQUA MASTER - MASTER SERIES
    7.5 - 10 HP, LED LIGHTING
    SEE DETAILS ON SHEET 'G'/L502
15. **LARGE SHELTER**
    BY POLYGON
    SEE SHEET L530
16. **RESTROOM**
    BY PUBLIC RESTROOM COMPANY
    SEE SHEET L520
17. **SMALL SHELTER**
    BY POLYGON
    SEE SHEET L540
18. **PEDESTRIAN BRIDGE**
    BY CONTECH
    SEE SHEET L503
19. **COUNCIL RING**
    SEE SHEET L560
20. **DRY STREAM**
    SEE SHEET L503
21. **FOREBAY**
    SEE SHEET L503
22. **BOARDWALK**
    BY PERMATRAK
    SEE SHEET L550
23. **DRINKING FOUNTAIN**
    BY MOST DEPENDABLE FOUNTAINS
    SEE SHEET 'D'/L502
24. **CHIMNEY SWIFT TOWER**
    SEE SHEET L502

SEE SHEET L600 FOR REFERENCE IMAGERY OF SITE ELEMENTS

PLANTING LEGEND

- CANOPY TREE
- EVERGREEN TREE
- FLOWERING TREE
- SHRUBS
- PERENNIALS

LEGEND

- PROJECT BOUNDARY
- EXISTING UTILITY
- PROPOSED UTILITY
- + TC 600.75 / + BC 600.25 — TOP OF CURB ELEVATION / BOTTOM OF CURB ELEVATION
- + TW 600.75 / + BW 595.25 — TOP OF WALL ELEVATION / BOTTOM OF WALL ELEVATION
- + 600.75 — SPOT ELEVATION
- 600 — CONTOURS
- NORTHING / EASTING COORDINATE POINT
- EJ — EXPANSION JOINTS
- PA — PLANTING AREA

SOILS LEGEND

- PLANTING SOIL A (ORNAMENTAL PLANTING AREAS)
- PLANTING SOIL B (MEADOW AREAS)
- PLANTING SOIL C (BIOFILTRATION AREAS) SEE SHEET C402

SEE DETAIL 'B' ON SHEET L501 AND SPECIFICATIONS FOR ADDITIONAL SOIL PREPARATION INFORMATION

1

25. **CONCRETE CURB AND GUTTER**
    SEE DETAIL ON SHEET C500
26. **2" ASPHALT MILL AND OVERLAY**
    SEE DETAIL ON SHEET C500
27. **ASPHALT PAVEMENT**
    SEE DETAIL ON SHEET C500
28. **CONCRETE WHEELSTOP**
    SEE DETAIL ON SHEET C500
29. **WHITE PAVEMENT STRIPE**
    4" WIDTH FOR PARKING STALLS
    CROSSWALKS PER CITY STANDARDS
30. **BLUE PAVEMENT STRIPE**
    4" WIDTH FOR HANDICAP PARKING STALLS

Call Before you DIG
TOLL FREE
1-800-344-7483
MISSOURI ONE-CALL SYSTEM INC
MODOT (314) 340-4100

NOTIFY LANDSCAPE ARCHITECT IMMEDIATELY IN EVENTS OF DISCREPANCIES, OMISSIONS, AND/OR CONFLICTS IN THE DRAWINGS OR SPECIFICATIONS. THE CONTRACTOR IS NOT AUTHORIZED TO SCALE THE DRAWINGS. ALL QUESTIONS IN REFERENCE TO CONTRACT DOCUMENTS SHALL BE IMMEDIATELY DIRECTED TO THE LANDSCAPE ARCHITECT

08-03-2015 - BID DOCUMENTS / PERMIT SET

CITY OF JOPLIN MISSOURI

Joplin Public Park

Landscape Architect
SWT DESIGN
7722 Big Bend Blvd
St. Louis, MO 63119
314.644.5700

Civil Engineer
Horner & Shifrin
401 S. 18th St. STE. 400
St. Louis, MO 63103
314.531.4321

Geotechnical Engineer
Palmerton & Parrish, Inc.
4168 W. Kearney
Springfield, MO 65803
417.864.6004

Irrigation Consultant
Landtech Design
8420 Zionsville Rd.
Indianapolis, IN 46268
314.541.2779

FOR BIDDING PURPOSE ONLY
NOT FOR CONSTRUCTION

Jay Wohlschlaeger
Landscape Architect
MO # LA-2009014766

STATE OF MISSOURI · JOHN WILLIAM WOHLSCHLAEGER · NUMBER LA-2009014766 · LANDSCAPE ARCHITECT · 08-03-2015

SWT Design, Inc.
Missouri State Certificate of Authority #2006002904

KEY PLAN

Issuances

No	Description	Date
01	Bid Documents / Permit Set	08/03/15

Revisions

No	Description	Date
01	Addendum #4	09/21/15

SWT No. 20288.01.000

Drawn: FSD
Reviewed: JJW

Sheet Title
ADDITIONAL NOTES AND LEGENDS

Number
G002

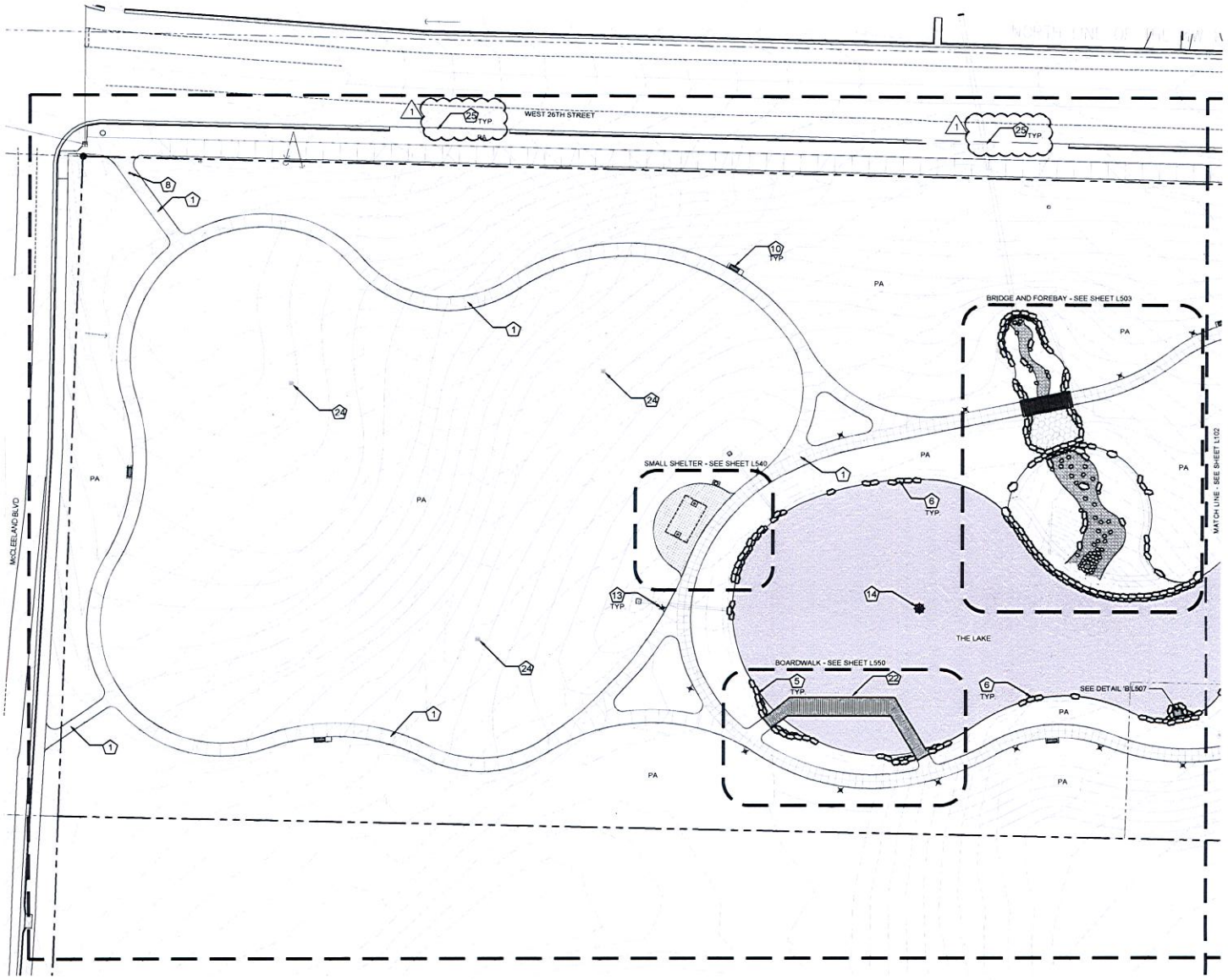

A MATERIAL PLAN - AREA A
SCALE: 1" = 30'

0' 15' 30' 60'

MATERIAL LEGEND

1. STANDARD CONCRETE PAVING
2. HEAVY DUTY CONCRETE PAVING
3. SPECIAL CONCRETE PAVING
4. CONCRETE STAIRS
5. NATURAL LIMESTONE BOULDER WALL
6. LAKE EDGE BOULDER WALL
7. LIMESTONE BOULDER SPILLWAY
8. RETRACTABLE VEHICLE BOLLARD
9. ENTRY SIGNAGE
10. BENCHES
11. BIKE RACK
12. WASTE RECEPTACLE
13. LIGHT POLE
14. FOUNTAIN
15. LARGE SHELTER
16. RESTROOM
17. SMALL SHELTER
18. PEDESTRIAN BRIDGE
19. COUNCIL RING
20. DRY STREAM
21. FOREBAY
22. BOARDWALK
23. DRINKING FOUNTAIN
24. CHIMNEY SWIFT TOWER
25. CONCRETE CURB AND GUTTER
26. 2" ASPHALT MILL AND OVERLAY
27. ASPHALT PAVEMENT
28. CONCRETE WHEELSTOP
29. WHITE PAVEMENT STRIPPING
30. BLUE PAVEMENT STRIPPING

ALL NOTES AND LEGENDS ARE LOCATED ON SHEETS G001 AND G002.

CITY OF JOPLIN MISSOURI

Joplin Public Park

Landscape Architect
SWT DESIGN
7722 Big Bend Blvd.
St. Louis, MO 63119
314.644.5700

Civil Engineer
Horner & Shifrin
401 S. 18th St. STE. 400
St. Louis, MO 63103
314.531.4321

Geotechnical Engineer
Palmerton & Parrish, Inc.
4168 W. Kearney
Springfield, MO 65803
417.864.6004

Irrigation Consultant
Landtech Design
8420 Zionsville Rd.
Indianapolis, IN 46268
314.541.2779

FOR BIDDING PURPOSE ONLY
NOT FOR CONSTRUCTION

Jay Wohlschlaeger
Landscape Architect
MO # LA-2009014766

STATE OF MISSOURI
JOHN WILLIAM WOHLSCHLAEGER
NUMBER LA-2009014766
LANDSCAPE ARCHITECT
08-03-2015

SWT Design, Inc.
Missouri State Certificate of Authority #2006002904

KEY PLAN

Issuances

No.	Description	Date
01	Bid Documents / Permit Set	08/03/15

Revisions

No.	Description	Date
01	Addendum #4	08/21/15

SWT No. 20288.01.000

Drawn FSD | Reviewed JWW

Sheet Title
MATERIALS AND NOTES - AREA A

Number
L101

08.03.2015 - BID DOCUMENTS / PERMIT SET

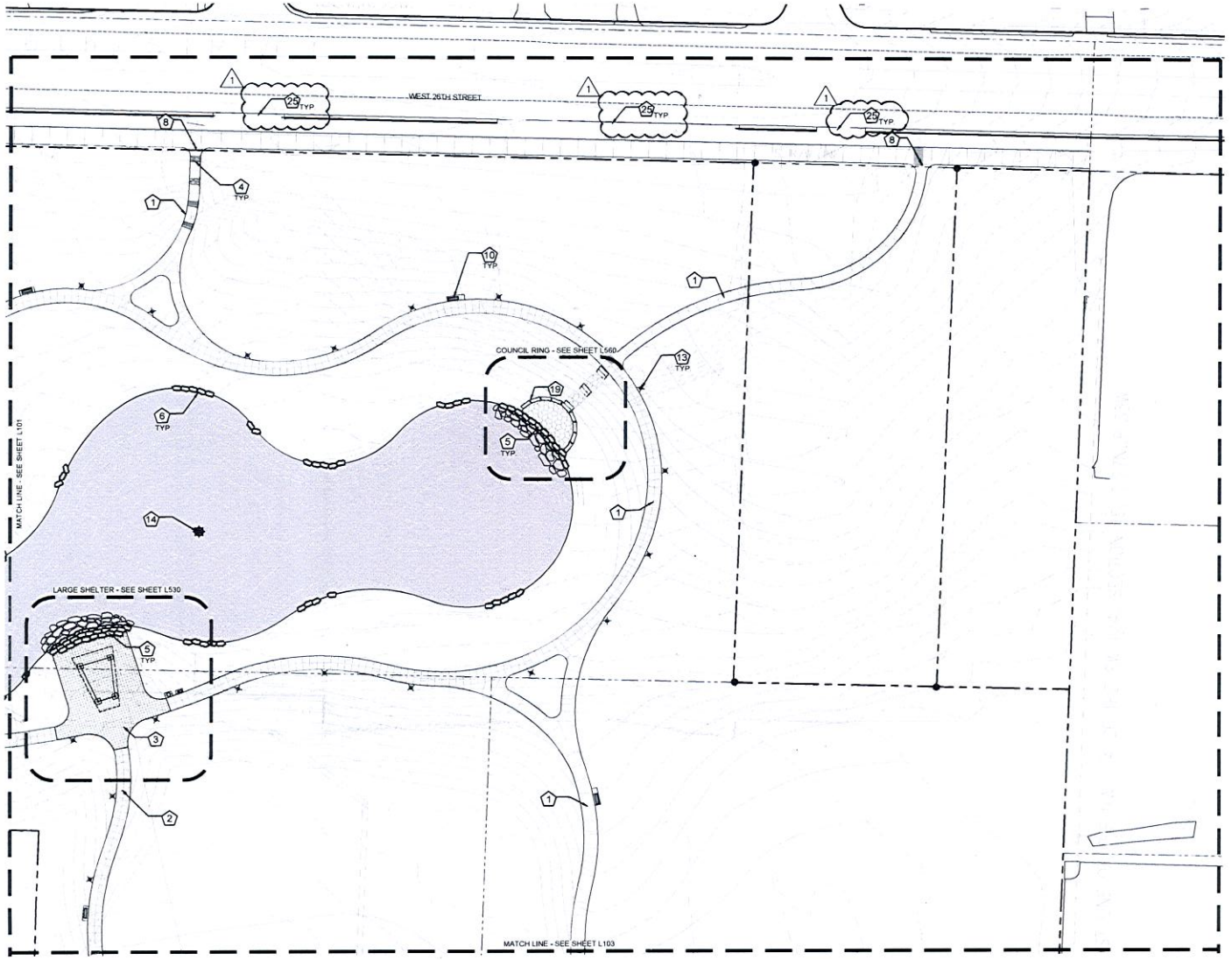

A MATERIAL PLAN - AREA B
SCALE: 1" = 30'

0' 15' 30' 60'

MATERIAL LEGEND

1. STANDARD CONCRETE PAVING
2. HEAVY DUTY CONCRETE PAVING
3. SPECIAL CONCRETE PAVING
4. CONCRETE STAIRS
5. NATURAL LIMESTONE BOULDER WALL
6. LAKE EDGE BOULDER WALL
7. LIMESTONE BOULDER SPILLWAY
8. RETRACTABLE VEHICLE BOLLARD
9. ENTRY SIGNAGE
10. BENCHES
11. BIKE RACK
12. WASTE RECEPTACLE
13. LIGHT POLE
14. FOUNTAIN
15. LARGE SHELTER
16. RESTROOM
17. SMALL SHELTER
18. PEDESTRIAN BRIDGE
19. COUNCIL RING
20. DRY STREAM
21. FOREBAY
22. BOARDWALK
23. DRINKING FOUNTAIN
24. CHIMNEY SWIFT TOWER
25. CONCRETE CURB AND GUTTER
26. 2" ASPHALT MILL AND OVERLAY
27. ASPHALT PAVEMENT
28. CONCRETE WHEELSTOP
29. WHITE PAVEMENT STRIPPING
30. BLUE PAVEMENT STRIPPING

ALL NOTES AND LEGENDS ARE LOCATED ON SHEETS G001 AND G002.

CITY OF JOPLIN MISSOURI

Joplin Public Park

Landscape Architect
SWT DESIGN
7722 Big Bend Blvd.
St. Louis, MO 63119
314.644.5700

Civil Engineer
Horner & Shifrin
401 S. 18th St, STE. 400
St. Louis, MO 63103
314.531.4321

Geotechnical Engineer
Palmerton & Parrish, Inc.
4168 W. Kearney
Springfield, MO 65803
417.864.6004

Irrigation Consultant
Landtech Design
8420 Zionsville Rd.
Indianapolis, IN 46268
314.541.2779

FOR BIDDING PURPOSE ONLY
NOT FOR CONSTRUCTION

Jay Wohlschlaeger
Landscape Architect
MO # LA-2009014766

STATE OF MISSOURI
JOHN WILLIAM WOHLSCHLAEGER
NUMBER LA-2009014766
LANDSCAPE ARCHITECT
06-03-2015

SWT Design, Inc.
Missouri State Certificate of Authority #2006002904

KEY PLAN

Issuances

No.	Description	Date
01	Bid Documents / Permit Set	06/03/15

Revisions

No.	Description	Date
01	Addendum #4	08/21/15

SWT No. 20288.01.000

Drawn FSD | Reviewed JAW

Sheet Title
MATERIALS AND NOTES - AREA B

Number
L102

06-03-2015 - BID DOCUMENTS / PERMIT SET

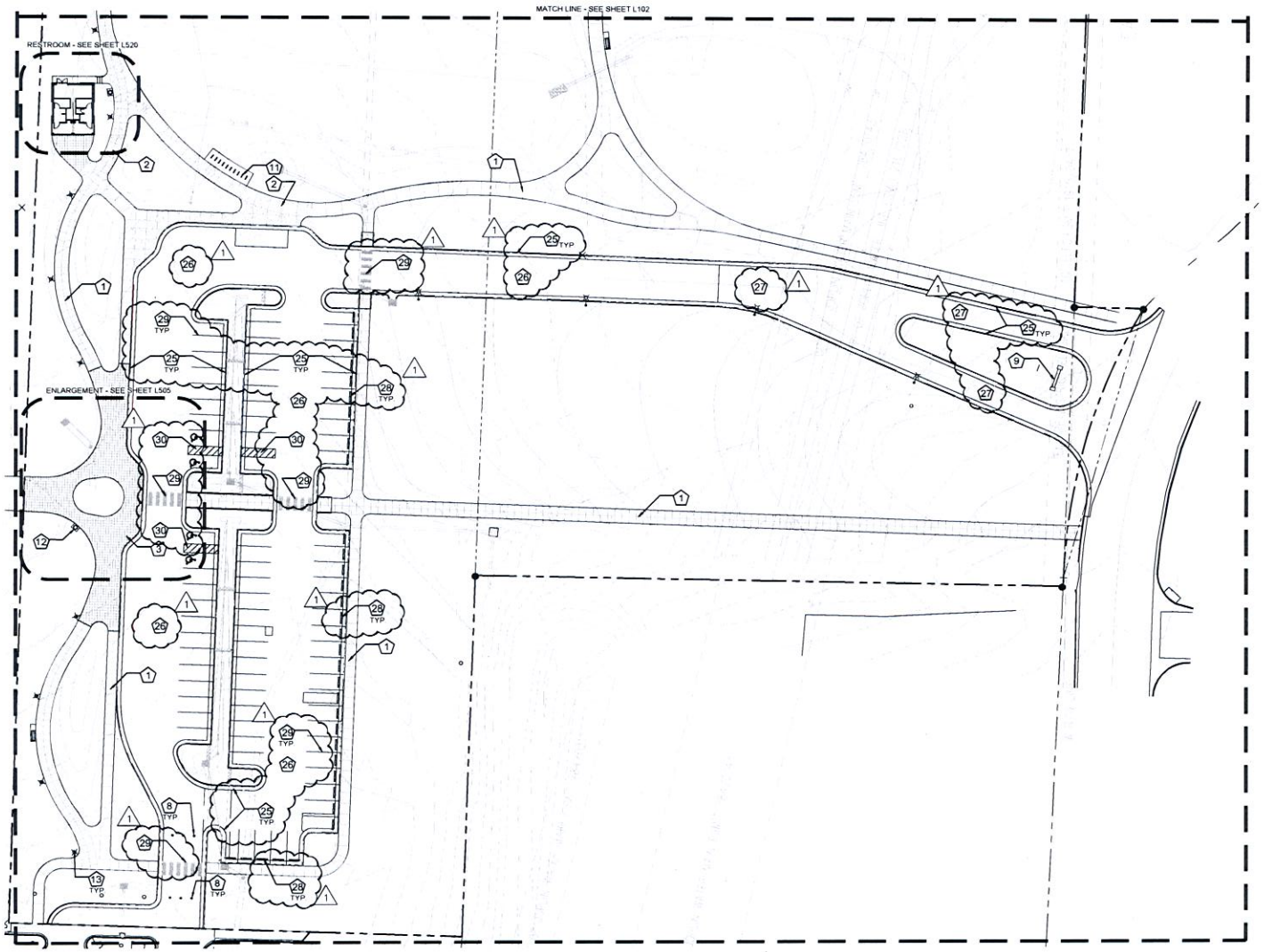

A MATERIAL PLAN - AREA C
SCALE 1" = 30'

0' 15' 30' 60'

MATERIAL LEGEND

1. STANDARD CONCRETE PAVING
2. HEAVY DUTY CONCRETE PAVING
3. SPECIAL CONCRETE PAVING
4. CONCRETE STAIRS
5. NATURAL LIMESTONE BOULDER WALL
6. LAKE EDGE BOULDER WALL
7. LIMESTONE BOULDER SPILLWAY
8. RETRACTABLE VEHICLE BOLLARD
9. ENTRY SIGNAGE
10. BENCHES
11. BIKE RACK
12. WASTE RECEPTACLE
13. LIGHT POLE
14. FOUNTAIN
15. LARGE SHELTER
16. RESTROOM
17. SMALL SHELTER
18. PEDESTRIAN BRIDGE
19. COUNCIL RING
20. DRY STREAM
21. FOREBAY
22. BOARDWALK
23. DRINKING FOUNTAIN
24. CHIMNEY SWIFT TOWER
25. CONCRETE CURB AND GUTTER
26. 2" ASPHALT MILL AND OVERLAY
27. ASPHALT PAVEMENT
28. CONCRETE WHEELSTOP
29. WHITE PAVEMENT STRIPPING
30. BLUE PAVEMENT STRIPPING

ALL NOTES AND LEGENDS ARE LOCATED ON SHEETS G001 AND G002.

CITY OF JOPLIN MISSOURI

Joplin Public Park

Landscape Architect:
SWT DESIGN
7722 Big Bend Blvd.
St. Louis, MO 63119
314.644.5700

Civil Engineer:
Horner & Shifrin
401 S. 18th St. STE. 400
St. Louis, MO 63103
314.531.4321

Geotechnical Engineer:
Palmerton & Parrish, Inc.
4168 W. Kearney
Springfield, MO 65803
417.864.6004

Irrigation Consultant
Landtech Design
8420 Zionsville Rd.
Indianapolis, IN 46268
314.541.2779

FOR BIDDING PURPOSE ONLY
NOT FOR CONSTRUCTION

Jay Wohlschlaeger
Landscape Architect
MO # LA-2009014766

STATE OF MISSOURI
JAY WILLIAM WOHLSCHLAEGER
NUMBER LA-2009014766
LANDSCAPE ARCHITECT
08-03-2015

SWT Design, Inc.
Missouri State Certificate of Authority #2006002904

KEY PLAN

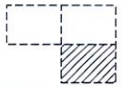

Issuances

No.	Description	Date
01	Bid Documents / Permit Set	08/03/15

Revisions

No.	Description	Date
01	Addendum #4	08/21/15

SWT No. 20288.01.000

Drawn FSD | Reviewed JJW

Sheet Title
MATERIALS AND NOTES - AREA C

Number
L103

08-03-2015 - BID DOCUMENTS / PERMIT SET

EXHIBIT D

REVISED CITY STANDARD DETAILS

USE ½" EXPANSION JOINT MATERIAL BETWEEN SEPARATE CONCRETE POURS

SIDEWALK WIDTHS WILL VARY DEPENDING ON DESIGN WIDTH

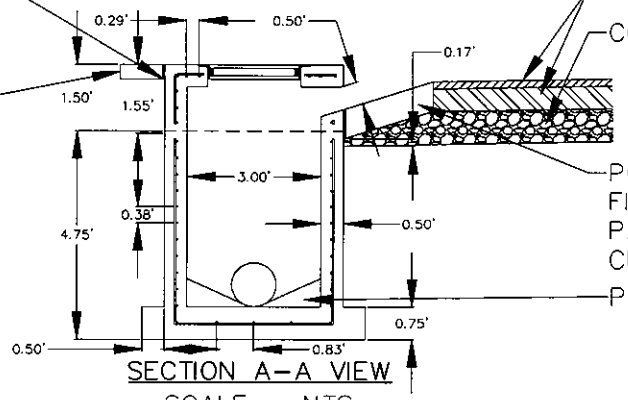

PAVEMENT SECTIONS

COMPACTED SUBBASE

POURED SEPARATELY FROM BOX FINISHED EDGE TO MEET EXISTING PAVEMENT GRADE TO BOTTOM OF CURB INLET OPENING

POURED INVERT

SECTION A–A VIEW

SCALE = NTS

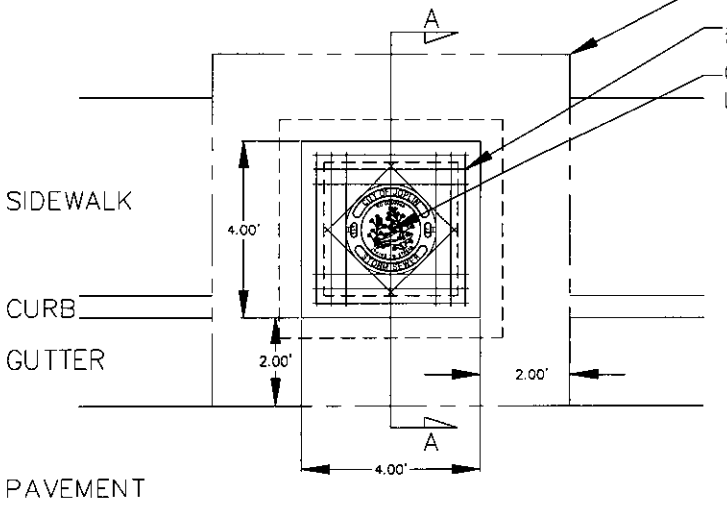

BID ITEM LIMIT

#4 BARS @ 4" O.C.

CITY OF JOPLIN STANDARD LID USE DEETER #2018–A



TYPE 'C' CURB INLET

PLAN VIEW

SCALE = NTS

DEETER #2018–A

PLAN VIEW

SCALE = NTS

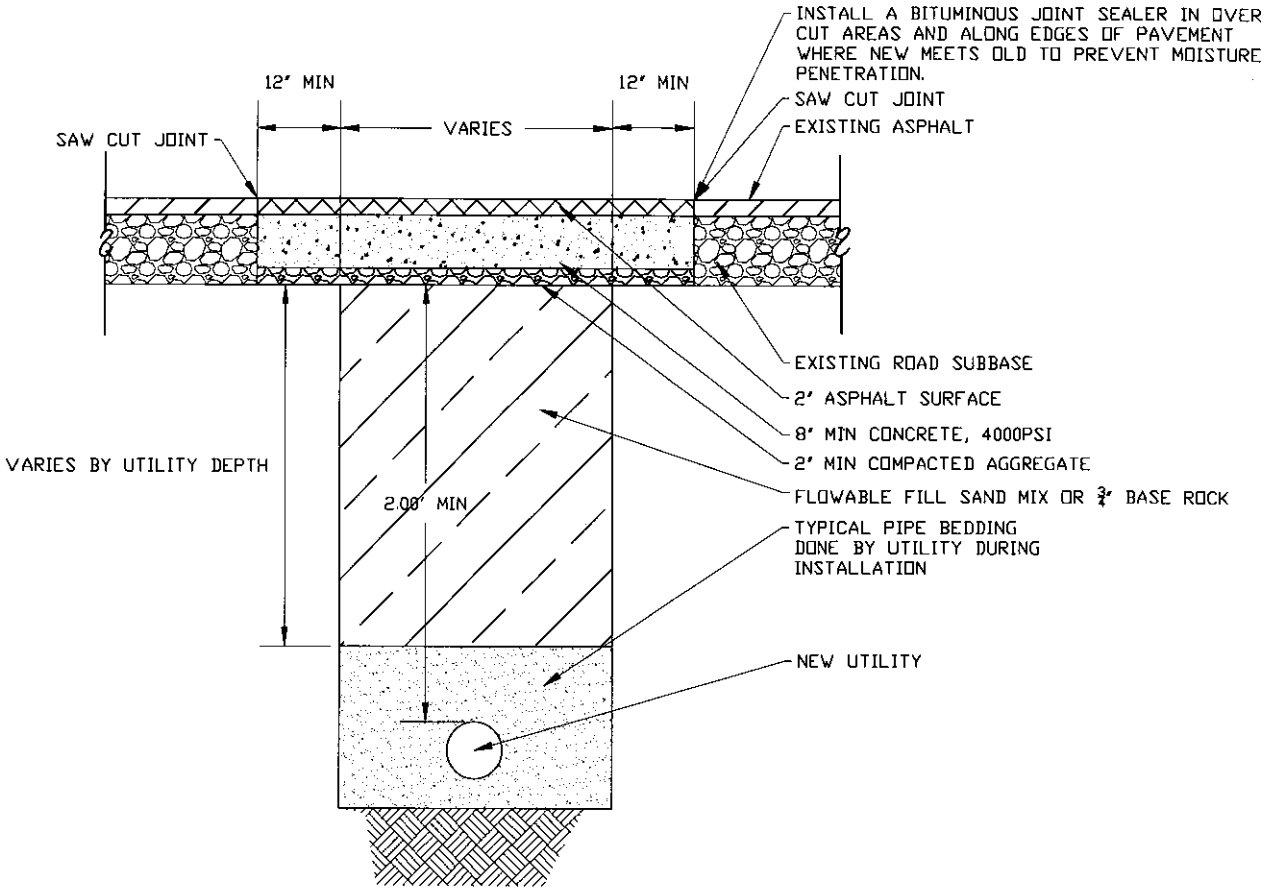

BITUMINOUS PAVEMENT PATCHING

N.T.S.

The City Of Joplin
Department of Public Works
Office of Engineering
602 S. Main St., Joplin, MO 64801
Phone: 417-624-0820 Fax: 417-625-4738

PAVEMENT REPAIR OF CITY STREETS

TYPICAL DETAIL

Detail Number:	TBD
Designed By: STAFF	Approved By: HEATHERLY
Drafted By: BL	Date: 2014
Scale:	NTS
	SHEET 1

concrete subcontractor. Notes on sheets L530, L540, and Specification Section 012300 – Alternates define base bid versus alternates.

D. **[Q:]** Why is division 9000 "Traffic Signals" included in Appendix A? **[A:]** Appendix A references the entire set of City Standard Specifications. Some sections are not relevant to the project.

E. Sealed bids will be accepted at Joplin City Hall, 602 S. Main Street, 4th Floor; Joplin, MO 64801 until 2pm, CST, August 27, 2015 and read aloud. All required documentation included with bid manual is due at this time.

END OF SECTION 009113

SECTION 009113 - **ADDENDA #5**

PART 1 - Addenda

1.1 PROJECT INFORMATION

A. Project Name: Joplin Public Park.

B. Owner: City of Joplin, MO.

C. Owner Project Number: 2015-011.

D. Architect: SWT Design.

E. Architect Project Number: 220288.01.

F. Date of Addendum: August 25, 2015.

1.2 NOTICE TO BIDDERS

A. This Addendum is issued to all registered plan holders pursuant to the Instructions to Bidders and Conditions of the Contract. This Addendum serves to clarify, revise, and supersede information in the Project Manual, Drawings, and previously issued Addenda. Portions of the Addendum affecting the Contract Documents will be incorporated into the Contract by enumeration of the Addendum in the Owner/Contractor Agreement.

B. The Bidder shall acknowledge receipt of this Addendum in the appropriate space on the Bid Form.

C. The date for receipt of bids is unchanged by this Addendum, at same time and location.

1. Bid Date: August 27, 2015.

1.3 ATTACHMENTS

A. This Addendum includes no attachments.

1.4 REVISIONS TO DIVISIONS 02 - 49 SPECIFICATION SECTIONS

A. Specification Section 321316 Decorative Concrete Paving, (not reissued).

1. Paragraph 2.3, A1: grey portland cement is allowed in lieu of white portland cement.

2. Paragraph 2.3, B: Bussen Quary is baseline for design, aggregate can be from others.

END OF SECTION 009113

EXHIBIT C

ILLUSTRATIVE SITE PLAN | FULL OPTION



EXHIBIT D

CITY OF JOPLIN MISSOURI

JOPLIN PUBLIC PARK

BID REVIEW

August 27, 2015

BID NUMBER	1	2	3
COMPANY NAME	Branco	Jeff Asbell Excavating & Trucking, Inc.	RE Smith Construction Company
CITY & STATE	Neosho, MO		Joplin, MO
CONTACT	Justin Branham	Jacob L Asbell	Richard D. Smith
PHONE	417-451-5250	417-649-1269	417-623-4545
EMAIL			

Base Bid	$4,325,000.00	-$69,966.00	$2,949,805.00	$1,305,229.00	$3,470,000.00	$785,034.00
Add Alternate #1 - 26th Street Trail	$66,000.00		$58,200.00	$1,247,029.00	$91,000.00	$694,034.00
Alternate #2 - Large Shelter	$123,000.00		$151,666.00	$1,095,363.00	$123,000.00	$571,034.00
Alternate #3 - Pedestrian Lighting	$155,000.00		$129,371.00	$965,992.00	$171,000.00	$400,034.00
Alternate #4 - Boardwalk	$108,000.00		$126,741.00	$839,251.00	$111,000.00	$289,034.00
Alternate #5 - Small Shelter	$73,000.00		$87,118.00	$752,133.00	$65,000.00	$224,034.00
Alternate #6 - Council Ring	$107,000.00		$19,795.00	$732,338.00	$66,000.00	$158,034.00
Alternate #7 - Pine Savanna Seed Mix	$9,000.00		$963.00	$731,375.00	$6,000.00	$152,034.00
Alternate #8 - Short Grass Prairie Mix	$46,000.00		$481.50	$730,893.50	$3,500.00	$148,534.00
	$5,012,000.00		$3,524,140.50		$4,106,500.00	

Total Project Budget	$4,976,728.00
Soft Costs (not including Mobilization & Contingency)	$721,694.00
**Available Construction Funds	$4,255,034.00

JOPLIN PUBLIC PARK

Pre-Bid Meeting
10:00am @ Joplin City Hall, 5th Floor
August 11, 2015

Name David Webb	Address: 313 W. 5th Joplin	Phone Number: 623-4848
Company Fagan Electric	Email: dwebb@faganelectric.com	
Name Zac Short	Address:	Phone Number:
Company Double S Dirt Works	Email: zac.ssdirtworks@windstream.net	417-943-2185
Name Mike Kinnear	Address: 2202 S. Prigmore	Phone Number: (+417)-623-3425
Company JIF	Email: mike@joplinelectric.com	
Name Rusty Snyder	Address:	Phone Number: 417.437-1195
Company Jeff Arbell Exc.	Email: rsnyder@jeffarbell.com	
Name Dwight Harvey	Address: 1776 Falcon Dr Joplin	Phone Number: 417-621-8031
Company BEI	Email: ~~dharvey@beijoplin.com~~	dharvey@beijoplin.com
Name Bo Jones / Jeff Coffey	Address: 815 S Schiffendecker	Phone Number: 417-206-0534
Company All Seasons	Email: jeff@joplinrockyard.com	
Name Jimmy Rogers Estate Management / Seeding	Address: 4657 W FR 60 Willard MO 65781	Phone Number: 417 838 8040
Company RE Smith	Email: dave@RESmithconst.com	417 439 4545
Name Dave Smith	Address: to Joplin	Phone Number:
Company	Email:	

JOPLIN PUBLIC PARK

Pre-Bid Meeting
10:00am @ Joplin City Hall, 5th Floor
August 11, 2015

Name Jacob Vaughn	Address: PO Box 438 Monett, MO 65708	Phone Number: 417-737-1427
Company Vaughn Dirtworks	Email: JDVLO@sbcglobal.net	
Name ADAM LAYNE	Address: 104 Byers	Phone Number: 417-782-5800
Company LAYNE Elect	Email: adam@laynelectric.com	
Name Shane McDaniel	Address:	Phone Number: 417-624-0651
Company Dalton-Killinger	Email: bidfile@daltonkillinger.com	
Name Chris Orf	Address: 5350 E HWY AA Springfield, MO	Phone Number: 417-833-9915
Company Emery Sapp & Sons	Email: chris.orf@emerysapp.com	
Name Atnip Enterprises	Address: Jasper MO	Phone Number: 417 525-3280 434-3783
Company Michael Ehrsam	Email: mikeehrsam@yahoo.com	
Name Rachel Baker	Address: rachelgaker@ppimail.com	Phone Number:
Company Paragon	Email: mikeb@paragontulsa.com	
Name Mike Thedford	Address: Tulsa, OK	Phone Number: 918-497-0627
Company	Email:	
Name	Address:	Phone Number:
Company	Email:	

JOPLIN PUBLIC PARK

Pre-Bid Meeting
10:00am @ Joplin City Hall, 5th Floor
August 11, 2015

Name: Duane McCarrick	Address: 9400 State Hwy 171, C.S., Mo	Phone Number: 417 437 0520
Company: Abel Excavating & Trucking	Email: DMcarrick@jeffabell.com	
Name: Bruce Johnson	Address: Neosho, MO	Phone Number: 417-451-5250 451-2851
Company: Branco Ent.	Email: bjohnson@branco.co	
Name: Brian Bennett	Address: 1346 S Fort Spfd MO	Phone Number: 417 880 5236
Company: Wickman	Email: brianbennett1950@gmail.com	
Name: Roofers Local 20	Address: KANSAS CITY	Phone Number: 417 413 6600
Company:	Email:	
Name:	Address:	Phone Number:
Company	Email:	
Name: Dan Yates	Address: 9585 County Line 274 Carl Junc.	Phone Number: 417-437-0206
Company: A-Y-1	Email: DYates@A-Y-1.com	
Name: Chris Beckstaver	Address: 1036 W. 2nd St.	Phone Number: 417-439-3394
Company: RE Smith	Email: Chris@resmithconst.com	
Name: Jason Carson	Address:	Phone Number: 417-869-5653
Company: Carson-Mitchell	Email: jason@carson-mitchell.com	

JOPLIN PUBLIC PARK

Pre-Bid Meeting
10:00am @ Joplin City Hall, 5th Floor
August 11, 2015

Name STEVE HOUSER	Address:	Phone Number: 620.429.1414
Company CROSSLAND CONST.	Email: shouser@crosslandconstruction.com	
Name SID DAVIS	Address:	Phone Number:
Company Traffic Southwest MO	Email: sdavis@joplin.com	417 437 0285
Name JUSTIN UNDERWOOD	Address:	Phone Number: 417-624-0651
Company DALTON-KILLINGER CONST	Email: bidfile @daltonkillinger	
Name LEN THOMASSY	Address:	Phone Number: 417-659-6008
Company GOONS ENT	Email: CONTACT@GOONSEATS.COM	
Name	Address:	Phone Number:
Company	Email:	
Name	Address:	Phone Number:
Company	Email:	
Name	Address:	Phone Number:
Company	Email:	
Name	Address:	Phone Number:
Company	Email:	

EXHIBIT E

Robyn, Tony

From: CDBGDR
Sent: Monday, September 14, 2015 11:43 PM
To: CDBG-RFP; dwartick@jeffasbell.com
Cc: dblackmon@jeffasbell.com; amoore@jeffasbell.com; Robyn, Tony; derekd@swtdesign.com; mcastrogiovanni@deloitte.com; dkehinde@deloitte.com
Subject: Re: Joplin Public Park Bid Documents

Evening,

Please be advised that due to your firm not being able to respond to the requested information within the requested timeframe your bid package for the Joplin Public Park project has been rejected.

If you have any questions please contact Mr. Tony Robyn at 417- 624-0820 ext 541or via email at trobyn@joplinmo.org

Sincerely,

City of Joplin

CDBG-DR Administration-dk

From: Kehinde, Dami (US - McLean)
Sent: Wednesday, September 9, 2015 1:46 PM
To: 'dwartick@jeffasbell.com' <dwartick@jeffasbell.com>
Cc: 'dblackmon@jeffasbell.com' <dblackmon@jeffasbell.com>; 'amoore@jeffasbell.com' <amoore@jeffasbell.com>; 'Robyn, Tony' <TRobyn@Joplinmo.org>; 'Derek Don' <derekd@swtdesign.com>; Castrogiovanni, Michael (US - Arlington) <mcastrogiovanni@deloitte.com>
Subject: Joplin Public Park Bid Documents

Thank you for your recent bid submittal for the Joplin Public Park- project number 2015-011. Please provide the following items by COB Friday, September 11th in order for your bid to remain valid:

1. Confirm that the firm is listed on SAM.GOV- please provide listing name and DUNS #
2. Schedule of Values form
3. Completed unit prices form

In lieu of interviews please see some additional questions we would like your firm to also respond to by COB Friday, September 11th

1. Does your bid number reflect all product and manufacturers identified in the bid documents? Did you include any approved equals?
2. Describe your overall schedule sequence for the project.
3. Are there any issues with the schedule and the completion date?
4. Do you anticipate any issues with the existing site conditions that would impact the construction schedule?

5. Do you have sufficient crews and manpower to complete the project in the timeframe stipulated in the specifications?
6. Do you have any questions regarding necessary submittals, field reviews, mock ups, etc.?
7. Do you understand that all work not performed to a satisfactory level per specifications will be redone at the contractor's expense?
8. Does you bid number include items such as: construction layout, traffic control and fencing?
9. Who will your plant suppliers or sources be?
10. Which method for the lake liner was included in your bid?
11. Do you have any concerns with procuring plant material to meet the construction schedule?
12. What/Who is your source for boulders?
13. Are you proposing any substitutions of plant material?
14. Provide examples of native landscape installations and establishment.
15. Describe your experience with lake, forebay, and stormwater BMP construction.
16. Describe your methodology for all construction and site layout.
17. Do you have experience working on projects for the City of Joplin?
18. Provide a breakout of your irrigation cost from the overall cost provided in item #10.
19. Describe your plan and sequencing for temporary stormwater management during construction of the lake, forebay and site improvements.

Please let Tony Robyn know if you have any questions and he can be reached at 417-624-0820 Ext 541 or via email at trobyn@joplinmo.org

Thanks,

Dami Kehinde
Deloitte Advisory
1919 North Lynn Street, Arlington, VA 22209-1742
Tel: +1 571-814-6875 | Mobile: +1 571-217-8399
dkehinde@deloitte.com | www.deloitte.com

Please consider the environment before printing.

This message (including any attachments) contains confidential information intended for a specific individual and purpose, and is protected by law. If you are not the intended recipient, you should delete this message and any disclosure, copying, or distribution of this message, or the taking of any action based on it, by you is strictly prohibited.
v.E.1

COUNCIL BILL NO. 2015-372 ORDINANCE NO.

AN ORDINANCE authorizing the City of Joplin to enter into an Agreement with R.E. Smith Construction in the amount not to exceed $4,031,000 to provide construction and associated development of the City of Joplin public park at 26th & McClelland, along with 26th Street sidewalk and trail improvements, to be funded with the CDBG-DR2, authorizing the City Manager to execute said Agreement for the City, and containing an emergency clause.

WHEREAS, on May 22nd, 2011, an EF-5 tornado caused catastrophic damage to a significant portion of the City of Joplin; and

WHEREAS**,** the Housing and Urban Development CDBG DR program provides assistance to communities requiring disaster recovery assistance; and

WHEREAS, the City of Joplin was awarded HUD CDBG-DR grant assistance in response to the loss of housing, infrastructure, and economic impacts caused by the tornado on May 22nd, 2011; and

WHEREAS**,** the City of Joplin is utilizing granted funds for the development of a new public park and facilities and associated site development needs.

BE IT ORDAINED BY THE COUNCIL OF THE CITY OF JOPLIN, MISSOURI**,** as follows:

Section 1. That the City enter into contract agreement with R.E. Smith Construction (Exhibit 1) in the amount not to exceed $4,031,000 (Four Million and Thirty-One Thousand Dollars) to provide park construction and associated development with the CDBG-DR funds.

Section 2. That the City Manager of the City of Joplin, Missouri, is hereby authorized to execute said agreement, or in substantially similar form for and on behalf of the City of Joplin.

Section 3. This Ordinance is an emergency within the meaning of Section 2.12 (6) in that said ordinance provides for public health and welfare and is considered an emergency by the Council and as such shall become effective immediately upon this passage as provided by the Home Rule Charter for the City of Joplin. This allows the project to be completed by the mandated completion date of May 22, 2017.

PASSED BY THE COUNCIL OF THE CITY OF JOPLIN, MISSOURI, this ____ Day of _____, 2015.

_____

Michael L. Seibert, Mayor

ATTEST:

_____

Barbara L. Hogelin, City Clerk

APPROVED AS TO FORM:

_____

Peter C. Edwards, City Attorney

City of **JOPLIN** City Council Agenda Item

Requested Council Meeting Date: October 5, 2015

Item: Council Bill No. 2015-372 authorizing and approving an Agreement between the City of Joplin and R.E. Smith Construction.

ORIGINATING DEPARTMENT: Planning, Development & Neighborhood Services
ATTACHMENTS: Council Bill No. 2015-372
Exhibit A – Agreement and Bid Response
Exhibit B – RFP and Addendum
Exhibit C – Council Approved Park Design
Exhibit D – Bid Tabulation and Mandatory Pre-bid Attendees
Exhibit E – Low Bid Incomplete Packet Rejection

PLANNING, DEV. & NS DIRECTOR: Troy Bolander
FINANCE DIRECTOR: Leslie Haase
CITY ATTORNEY: Peter C. Edwards
CITY MANAGER: Sam L. Anselm

INTRODUCTION:

This Council Bill authorizes the City of Joplin to enter into Agreement with the R.E. Smith Construction for Construction Services relating to the CDBG-DR2 funded public park at 26th & McClelland on land previously owned and donated by Mercy Hospital and accepted by the City of Joplin for public passive use.

DISCUSSION:

This Council Bill authorizes the City of Joplin to enter into an Agreement with R.E. Smith Construction for Construction Services to advance the construction of the new City of Joplin public park and associated infrastructure, including a sidewalk along 26th; authorizing the City Manager to execute said Agreement in substantially similar form; and containing an emergency clause.

Three bids were received. The lowest bid packet was rejected for incompleteness, therefore R.E Smith was selected as the next lowest.

The construction firm will work closely with City staff and leadership, and the City procured consulting firm Deloitte, to advance site and park development and associated infrastructure improvements.

RECOMMENDATION:

Staff recommends this Council Bill be approved on an emergency basis, that this Ordinance dealing with a public improvement, is an emergency within the meaning of Section 2.12(6) of the

Home Rule Charter of the City of Joplin, Missouri, and, the same shall be in full force and effect immediately from and after its adoption and approval. Specifically, this Ordinance requires the City of Joplin to initiate public improvement planning and construction of the park.

City of Joplin City Council Agenda Item

REQUESTED COUNCIL MEETING DATE: October 5, 2015
ITEM: Council Bill No. 2015-622

ORIGINATING DEPARTMENT: Joplin Police Department
ATTACHMENTS: Council Bill No. 2015-622; copy of attachments

DEPARTMENT HEAD:	Jason Burns	**DATE:**
CITY MANAGER:	Sam Anselm	**DATE:**
CITY ATTORNEY:	Peter Edwards	**DATE:**
FINANCE DIRECTOR:	Leslie Haase	**DATE:**

INTRODUCTION:

The Joplin Police Department requests consideration of this Council Bill. This request, if approved, would authorize a contract between the City of Joplin and the Missouri Department of Transportation for the acceptance and expenditure of grant funds. There is a total of three grants totaling $124,900. The first grant is for the funding of the Joplin Police Department's Full Time DWI Unit in the amount of $102,000. This grant pays for 50% of salaries, benefits, and overtime for two officers that are currently assigned to this unit. It will also cover equipment to include the replacement of one of our DWI vehicles. The second grant is in the amount of $10,000 and will be used to cover overtime costs and fringe benefit costs for Hazardous Moving Violation enforcement. The third grant is in the amount of $12,700 and will be used to cover overtime costs and fringe benefit costs for DWI Enforcement details and Youth Alcohol Enforcement details. Part of this grant will also cover for one officer to attend training at the annual LETSAC conference.

SUMMARY/DISCUSSION:

The Joplin Police Department has received these grants for several years. We first received the grant to fund the full-time DWI unit in 2010. At that time, the grant was for 100% of funding of the DWI positions. The grant was reduced to 75% the following year and to 50% the next year. The original plan for this grant was to eliminate funding for the DWI positions after three years. Our DWI unit has been very successful and because of that, the positions have continued to be funded at 50%. Each year the Joplin Police Department's DWI Unit has led the State in DWI arrests when compared to other DWI units that are funded under the

same grant. The second grant will be utilized to cover overtime costs and fringe benefits for Hazardous Moving Violation details. These details are used to focus enforcement efforts on Hazardous Moving Violations that occur within the city limits of Joplin. The efforts are focused in high crash areas and they have been instrumental in keeping our crash numbers down each year. We are currently on pace to have a 3% reduction in crashes from the previous year. The third grant will be utilized to cover overtime costs and fringe benefits for DWI enforcement details. The focus of these details will be to make for a safer community by detecting and arresting drivers who are intoxicated.

RECOMMENDATION:

Staff recommends approval of this proposal on an emergency basis.

MLS
attachment

COUNCIL BILL NO. 2015-622 ORDINANCE NO.

AN ORDINANCE approving a Contract for grant money by and between the City of Joplin, Missouri and the Missouri Department of Transportation dealing generally with the Full Time DWI Unit, Hazardous Moving Violations Enforcement, and DWI Enforcement in the amount of One Hundred Twenty-Four Thousand, Nine Hundred Dollars ($124,900.00); authorizing the City Manager to execute the same by and on behalf of the City of Joplin, Missouri; and containing an emergency clause.

WHEREAS, The City of Joplin has received three grants in the amount of $124,900 from the Missouri Department of Transportation;

WHEREAS, This agreement allows for the acceptance of the award and for the expenditure of the grant money;

WHEREAS, This allows for the enforcement of DWI laws as well as training and equipment to further our effort in reducing DWI crashes as well as reducing crashes involving Hazardous Moving Violations.

NOW, THEREFORE, BE IT ORDAINED BY THE COUNCIL OF THE CITY OF JOPLIN, MISSOURI, as follows:

Section 1. That the Contract for Grant Funding by and between the City of Joplin and the Missouri Department of Transportation, in a total amount of One Hundred Twenty-Four Thousand, Nine Hundred Dollars ($124,900.00), providing for the funding of 50% of the salary and fringe, and the overtime and fringe of two police officer postions, HMV Overtime to include fringe benefits, and DWI Enforcement Patrols and Checkpoints Overtime to include fringe benefits, a true and accurate copy of the same being attached hereto as in Exhibit, be and the same is, hereby approved.

Section 2. That the City Manager is hereby authorized and directed to execute said Agreement by and on behalf of the City of Joplin, Missouri.

Section 3. That this Ordinance is an emergency within the meaning of Section 2.12 (1) of the Home Rule Charter of the City of Joplin, Missouri, in that said ordinance is for the preservation of public property and safety, and as such, is considered an emergency and shall take effect immediately upon passage. Specifically, DWI training and enforcement enhances public safety.

PASSED BY THE COUNCIL OF THE CITY OF JOPLIN, MISSOURI, this _____ day of _____, 2015, by a _____ vote.

Michael Siebert, Mayor

Council Bill No. 2015-622 (Continued)

ATTEST:

Barbara L. Hogelin, City Clerk

APPROVED AS TO FORM:

Peter Edwards, City Attorney

I hereby certify that a sufficient amount is available in the Police Department Budget, Account Nos. 510-5590-510-1010, 1020, 1605-1650, 2050, 6005-6010, and 8210 to pay the contract amount.

Leslie Haase, Director of Finance

Traffic and Highway Safety Division
TRAFFIC ENFORCEMENT APPLICATION
October 01, 2015 through September 30, 2016

(Application due by March 02, 2015)

Traffic and Highway Safety Division
P.O. Box 270
830 MoDOT Drive
Jefferson City, MO 65102
1-800-800-2358 or 573-751-4161

Agency:	Joplin Police Dept.	**Agency ORI#:**	MO0490700
Address:	303 E. 3rd St.	**Federal Tax ID#:**	446000196
		State Tax ID#:	

City:	Joplin	**State:**	MO	**Zip:**	64801-2316	**County:**	Jasper
Phone:	417-623-3131	**Fax:**	417-623-4604				
Contact:	Sgt. Ryan West	**Email:**	rwest@joplinmo.org				
Jurisdiction:	Rural	**Jurisdiction Population:**	54,000				
Targeted Population:	All Drivers						

Project activity for which your agency is requesting funding:

DWI Enforcement

Project Title:	DWI Enforcement and Youth Alcohol	**Requested Amount:**	$12,700.00
Brief Description:	DWI Saturation Patrols/Checkpoints		

Darren Gallup
Authorizing Official

Authorizing Official Signature

Captain
Authorizing Official Title

Traffic and Highway Safety Division
P.O. Box 270
Jefferson City, MO 65102
1-800-800-2358 or 573-751-4161

CITY COUNCIL AUTHORIZATION

On _____, 20___ the Council of _____

_____ held a meeting and discussed the City's participation in Missouri's Highway Safety Program.

It is agreed by the Council that the City of _____ will participate in Missouri's Highway Safety Program.

It is further agreed by the Council that the Chief of Police will investigate the financial assistance available under the Missouri Highway Safety Program for Traffic Enforcement and report back to the Council his/her recommendations. When funding through the Highway Safety Division is no longer available, the local government entity agrees to make a dedicated attempt to continue support for this traffic safety effort.

_____	_____
Council Member	Council Member
_____	_____
Council Member	Council Member
_____	_____
Council Member	Council Member
_____	_____
Council Member	Council Member

_____

Mayor

PROBLEM IDENTIFICATION

Alcohol and other drugs contribute substantially to traffic crashes on Missouri's roads, particularly those resulting in death or serious injury. In the 2011-2013 period, 419,658 traffic crashes occurred in the state. Of those, 0.5% resulted in a fatality and 3.0% involved someone being seriously injured. During the same time period, there were 20,061 traffic crashes where one or more drivers and/or pedestrians were under the influence of intoxicants and in the opinion of the investigating officer their intoxicated condition was a contributing factor to the crash. In these crashes where drivers or pedestrians were impaired by alcohol or other drugs, 717 people were killed and another 2,644 were seriously injured. It also is important to note that substance-impaired driving is under-reported as a contributing factor in traffic crashes. This under-reporting is due to drivers undergoing injuries sustained from crashes without being tested for blood alcohol content. Also, some forms of drug impairment may not be apparent to officers on the scene. As a result, it is an even greater problem than these statistics would indicate. In addition, 87.7% of substance-impaired drivers killed also failed to wear a safety belt further compounding the problem of substance-impaired driving.

A common misconception is that substance-impaired drivers are primarily injuring and killing themselves. While that is often true, a substantial number of people killed and seriously injured in these crashes were not intoxicated by alcohol or other drugs. Their actions in these incidents probably did not contribute to the cause of the collision. Of the 717 people killed in alcohol and other drug-related traffic crashes, 69.2% were the substance-impaired driver/pedestrian and 30.8% were some other involved party. Of the 2,644 seriously injured, 61.7% were the substance-impaired drivers/pedestrians while 38.3% were other persons in the incidents.

The Joplin Police Department investigated 5,285 traffic crashes from 2012-2014. This number includes crashes on city streets, state highways, and IS 44. Of the 5,285 crashes, 924 resulted in a serious physical injury, and another 18 resulted in fatalities.

Of the 942 crashes that resulted in serious physical injury or death, 57 had alcohol as a contributing factor. Additionally, alcohol was a contributing factor in 225 total crashes from 2012-2014. The Joplin Police Department also issued 690 DWI citations in 2014 alone.

The City of Joplin is incorporated in two separate counties, Jasper and Newton. According to statistics provided by the MSHP, from 2011-2013 Jasper County ranked 8th in the state with 49 youth alcohol related crashes. Newton County ranked 11th, with 35. Among Missouri cities, Joplin ranked 13th with 19 youth alcohol related crashes.

The City of Joplin serves as the nighttime entertainment hub for the region. We have a large concentration of bars and restaurants, and a large casino just outside of town.

GOALS/OBJECTIVES

Goal: To decrease fatalities involving drivers with .08 BAC or greater to:
- 267 by 2013
- 255 by 2014
- 243 by 2015
- 230 by 2016

Performance Measure:
Number of fatalities involving drivers with .08 BAC or greater

Benchmark:
2012 fatalities involving drivers with .08 BAC or greater = 280

Objectives:
1. Participate in the National Impaired Driving Crackdown campaign
2. Participate in the quarterly impaired driving enforcement campaigns
3. Develop and implement a high visibility DWI enforcement plan involving saturation patrols and/or sobriety checkpoints

PROJECT DESCRIPTION

Project Description information will be captured in the supplemental section.

20 Total number of alcohol-related traffic crashes resulting in a fatality. 4

21 Total number of alcohol-related traffic crashes resulting in a serious injury. 53

22 Total number of unbuckled fatalities. 4

23 Total number of unbuckled serious injuries. 131

Enter your agency's information below.

24 Total number of commissioned law enforcement officers. 112

25 Total number of commissioned patrol and traffic officers. 69

26 Total number of commissioned law enforcement officers available for overtime enforcement. 105

27 Total number of vehicles available for enforcement. 48

28 Total number of radars/lasers. 46

29 Total number of in-car video cameras. 26

30 Total number of PBT's. 21

31 Total number of Breathalyzers. 5

The following information explains the strategies your agency will use to address the traffic crash problem. This information is considered to be the Project Description and should be specific to the crash problem.

32 Identify the primary enforcement locations.

Primary enforcement locations will be Joplin city streets, around areas that historically have high DWI crash and arrest rates. This will also include state roadways within the Joplin city limits. These funds are also used to pay Joplin officers working with other agencies through the DWI task force.

33 Enter the months in which enforcement will be conducted.

Enforcement will be conducted throughout the grant cycle. Enforcement efforts will increase during warmer months and holiday campaigns.

34 Enter the number of enforcement periods your agency will conduct each month. 2

35 Enter the days of the week in which enforcement will be conducted.

Enforcement will primarily be conducted on Thursday, Friday, and Saturday.

36 Enter the time of day in which enforcement will be conducted.

These details will be conducted during peak DWI times, primarily 2100-0300 hours.

37 Enter the number of officers assigned during the enforcement period. 6

38 If equipment, promotional items, or supplies are requested to conduct this project, explain below why it is needed and how it will be used.

n/a

PROJECT EVALUATION

The MHTC will administratively evaluate this project. Evaluation will be based, at a minimum, upon the following:

1. Law enforcement compliance with state UCR, Racial Profiling, and STARS reporting requirements (law enforcement contracts only)
2. Timely submission of monthly reimbursement vouchers and appropriate documentation to support reimbursement for expenditures (i.e., personal services, equipment, materials)
3. Timely submission of periodic reports (i.e., monthly, quarterly, semi-annual) as required
4. Timely submission of the Year End Report of activity (due within 30 days after contract completion date)
5. Attaining the Goals set forth in this contract*
6. Accomplishing the Objectives* established to meet the project Goals, such as:
   - Enforcement activities (planned activities compared with actual activities)
   - Programs (number and success of programs held compared to planned programs, evaluations if available)
   - Training (actual vs. anticipated enrollment, student evaluations of the class, student test scores on course examinations, location of classes, class cancellation information)
   - Equipment purchases (timely purchase of equipment utilized to support and enhance the traffic safety effort; documentation of equipment use and frequency of use)
   - Public awareness activities (media releases, promotion events, incentive items or education materials produced or purchased)
   - Other (any other information or material that supports the Objectives)
7. The project will be evaluated by the Traffic and Highway Safety Division through annual crash analysis.

Evaluation results will be used to determine:
- The success of this type of activity in general and this particular project specifically;
- Whether similar activities should be supported in the future; and
- Whether grantee will receive funding for future projects.

*Evaluation and requests to fund future projects will not be based solely on attaining Goals and/or Objectives if satisfactory justification is provided.

BUDGET

Category	Item	Description	Quantity	Unit Cost	Total	Match	Total Requested
Personnel							
	Overtime and Fringe	Funding of overtime and benefits.	1	$12,000.00	$12,000.00	$0.00	**$12,000.00**
					$12,000.00	**$0.00**	**$12,000.00**
Training							
	Professional Development	1 officer to LETSAC	1	$700.00	$700.00	$0.00	**$700.00**
					$700.00	**$0.00**	**$700.00**
				Total Contract	**$12,700.00**	**$0.00**	**$12,700.00**

ATTACHMENTS

Document Type	Description	Original File Name	Date Added

Traffic and Highway Safety Division
TRAFFIC ENFORCEMENT APPLICATION
October 01, 2015 through September 30, 2016

(Application due by March 02, 2015)

Traffic and Highway Safety Division
P.O. Box 270
830 MoDOT Drive
Jefferson City, MO 65102
1-800-800-2358 or 573-751-4161

Agency:	Joplin Police Dept.	**Agency ORI#:**	MO0490700
Address:	303 E. 3rd St.	**Federal Tax ID#:**	446000196
		State Tax ID#:	

City:	Joplin	**State:**	MO	**Zip:**	64801-2316	**County:**	Jasper
Phone:	417-623-3131	**Fax:**	417-623-4604				
Contact:	Sgt. Ryan West	**Email:**	rwest@joplinmo.org				
Jurisdiction:	Rural	**Jurisdiction Population:**	54,000				
Targeted Population:	All Drivers						

Project activity for which your agency is requesting funding:

DWI Enforcement

Project Title:	Full Time DWI Unit	**Requested Amount:**	$102,200.00
Brief Description:	Full Time DWI Unit		

Darren Gallup
Authorizing Official

Authorizing Official Signature

Captain
Authorizing Official Title

Traffic and Highway Safety Division
P.O. Box 270
Jefferson City, MO 65102
1-800-800-2358 or 573-751-4161

CITY COUNCIL AUTHORIZATION

On _____, 20___ the Council of _____

_____ held a meeting and discussed the City's participation in Missouri's Highway Safety Program.

It is agreed by the Council that the City of _____ will participate in Missouri's Highway Safety Program.

It is further agreed by the Council that the Chief of Police will investigate the financial assistance available under the Missouri Highway Safety Program for Traffic Enforcement and report back to the Council his/her recommendations. When funding through the Highway Safety Division is no longer available, the local government entity agrees to make a dedicated attempt to continue support for this traffic safety effort.

_____ Council Member	_____ Council Member
_____ Council Member	_____ Council Member
_____ Council Member	_____ Council Member
_____ Council Member	_____ Council Member

_____
Mayor

PROBLEM IDENTIFICATION

Alcohol and other drugs contribute substantially to traffic crashes on Missouri's roads, particularly those resulting in death or serious injury. In the 2011-2013 period, 419,658 traffic crashes occurred in the state. Of those, 0.5% resulted in a fatality and 3.0% involved someone being seriously injured. During the same time period, there were 20,061 traffic crashes where one or more drivers and/or pedestrians were under the influence of intoxicants and in the opinion of the investigating officer their intoxicated condition was a contributing factor to the crash. In these crashes where drivers or pedestrians were impaired by alcohol or other drugs, 717 people were killed and another 2,644 were seriously injured. It also is important to note that substance-impaired driving is under-reported as a contributing factor in traffic crashes. This under-reporting is due to drivers undergoing injuries sustained from crashes without being tested for blood alcohol content. Also, some forms of drug impairment may not be apparent to officers on the scene. As a result, it is an even greater problem than these statistics would indicate. In addition, 87.7% of substance-impaired drivers killed also failed to wear a safety belt further compounding the problem of substance-impaired driving.

A common misconception is that substance-impaired drivers are primarily injuring and killing themselves. While that is often true, a substantial number of people killed and seriously injured in these crashes were not intoxicated by alcohol or other drugs. Their actions in these incidents probably did not contribute to the cause of the collision. Of the 717 people killed in alcohol and other drug-related traffic crashes, 69.2% were the substance-impaired driver/pedestrian and 30.8% were some other involved party. Of the 2,644 seriously injured, 61.7% were the substance-impaired drivers/pedestrians while 38.3% were other persons in the incidents.

The Joplin Police Department investigated 5,285 traffic crashes from 2012-2014. This included crashes on city streets, several state highways, and IS 44. Of those crashes, 924 resulted in a serious physical injury, and another 18 resulted in a fatality.

Of the 942 crashes resulting in serious injury or death, 57, or slightly over 6%, had alcohol as a contributing factor. Alcohol was a contributing factor in 225 total traffic crashes in the City of Joplin between 2012-2014. Additionally, the Joplin Police Department issued 690 DWI violations in 2014 alone.

The City of Joplin also serves as a nighttime entertainment hub for the region, with a large concentration of bars, restaurants, and a large casino just outside of town.

The City of Joplin is incorporated in 3 different counties, Jasper and Newton. According to the MSHP, between 2011 and 2013, there were 333 alcohol involved crashes in Jasper County, ranking 11th in the state. There were 225 alcohol related crashes in Newton County, ranking 13th in the state. For the same period, the City of Joplin recorded 153 alcohol related crashes, ranking 10th in the state. Between 2011-2013, the City of Joplin recorded 52 alcohol related crashes that resulted in a serious injury, and 7 that resulted in fatalities.

GOALS/OBJECTIVES

Goal: To decrease fatalities involving drivers with .08 BAC or greater to:
- 267 by 2013
- 255 by 2014
- 243 by 2015
- 230 by 2016

Performance Measure:
Number of fatalities involving drivers with .08 BAC or greater

Benchmark:
2012 fatalities involving drivers with .08 BAC or greater = 280

Objectives:
1. Participate in the National Impaired Driving Crackdown campaign
2. Participate in the quarterly impaired driving enforcement campaigns
3. Develop and implement a high visibility DWI enforcement plan involving saturation patrols and/or sobriety checkpoints

PROJECT DESCRIPTION

Project Description information will be captured in the supplemental section.

SUPPLEMENTAL INFORMATION

Question	Answer
You must answer the following questions.	
1 Does your agency have an internal safety belt policy for all personnel?	Yes
2 Does your agency report racial profiling data annually?	Yes
3 Does your agency report to STARS?	Yes
4 Does your agency report UCR information annually?	Yes
5 Has any of your officers/personnel been debarred and are therefore not eligible to receive federal funds for reimbursement of salary, fringe benefits, or overtime?	No
6 Please explain any NO answer(s) to questions 1-4:	
Please use the most current 12-months of data available for answering questions 7-12.	
7 Total number of DWI violations written.	690
8 Total number of speeding violations written.	1806
9 Total number of HMV violations written.	10,183
10 Total number of child safety/booster seat violations written.	109
11 Total number of safety belt violations written.	3381
12 Total number of sobriety checkpoints hosted.	5
Use the most current three years crash data for questions 13-23.	
13 Total number of traffic crashes.	5285
14 Total number of traffic crashes resulting in a fatality.	18
15 Total number of traffic crashes resulting in a serious injury.	924
16 Total number of speed-related traffic crashes.	257
17 Total number of speed-related traffic crashes resulting in a fatality.	5
18 Total number of speed-related traffic crashes resulting in a serious injury.	72
19 Total number of alcohol-related traffic crashes.	168

20 Total number of alcohol-related traffic crashes resulting in a fatality. 4

21 Total number of alcohol-related traffic crashes resulting in a serious injury. 53

22 Total number of unbuckled fatalities. 4

23 Total number of unbuckled serious injuries. 131

Enter your agency's information below.

24 Total number of commissioned law enforcement officers. 112

25 Total number of commissioned patrol and traffic officers. 69

26 Total number of commissioned law enforcement officers available for overtime enforcement. 103

27 Total number of vehicles available for enforcement. 48

28 Total number of radars/lasers. 46

29 Total number of in-car video cameras. 26

30 Total number of PBT's. 21

31 Total number of Breathalyzers. 5

The following information explains the strategies your agency will use to address the traffic crash problem. This information is considered to be the Project Description and should be specific to the crash problem.

32 Identify the primary enforcement locations.

This grant will be utilized throughout the Joplin city limits, state highways, and the Interstate System. Additionally, the full time DWI Officers will travel to other parts of the region to assist with the DWI Task Force and training.

33 Enter the months in which enforcement will be conducted.

This grant will be drawn from throughout the year, the heavier months of enforcement will coincide with the weather and checkpoints.

34 Enter the number of enforcement periods your agency will conduct each month. 32

35 Enter the days of the week in which enforcement will be conducted.

These officers will provide coverage Monday-Saturday, with additional emphasis on Thursday, Friday, and Saturday

36 Enter the time of day in which enforcement will be conducted.

Primarily these officers focus their efforts during the evening and early morning hours, 1700-0300 hours.

37 Enter the number of officers assigned during the enforcement period. 2

38 If equipment, promotional items, or supplies are requested to conduct this project, explain below why it is needed and how it will be used.

Equipment will be asked for to replace aging equipment.

PROJECT EVALUATION

The MHTC will administratively evaluate this project. Evaluation will be based, at a minimum, upon the following:

1. Law enforcement compliance with state UCR, Racial Profiling, and STARS reporting requirements (law enforcement contracts only)
2. Timely submission of monthly reimbursement vouchers and appropriate documentation to support reimbursement for expenditures (i.e., personal services, equipment, materials)
3. Timely submission of periodic reports (i.e., monthly, quarterly, semi-annual) as required
4. Timely submission of the Year End Report of activity (due within 30 days after contract completion date)
5. Attaining the Goals set forth in this contract*
6. Accomplishing the Objectives* established to meet the project Goals, such as:
   - Enforcement activities (planned activities compared with actual activities)
   - Programs (number and success of programs held compared to planned programs, evaluations if available)
   - Training (actual vs. anticipated enrollment, student evaluations of the class, student test scores on course examinations, location of classes, class cancellation information)
   - Equipment purchases (timely purchase of equipment utilized to support and enhance the traffic safety effort; documentation of equipment use and frequency of use)
   - Public awareness activities (media releases, promotion events, incentive items or education materials produced or purchased)
   - Other (any other information or material that supports the Objectives)
7. The project will be evaluated by the Traffic and Highway Safety Division through annual crash analysis.

Evaluation results will be used to determine:
- The success of this type of activity in general and this particular project specifically;
- Whether similar activities should be supported in the future; and
- Whether grantee will receive funding for future projects.

*Evaluation and requests to fund future projects will not be based solely on attaining Goals and/or Objectives if satisfactory justification is provided.

BUDGET

Category	Item	Description	Quantity	Unit Cost	Total	Match	Total Requested
Equipment							
	BA Simulators	Solution	1	$150.00	$150.00	$0.00	**$150.00**
	Breath Instrument	Mouthpieces	1	$500.00	$500.00	$0.00	**$500.00**
	Vehicle	Replace one of our two aging grant vehicles	1	$40,000.00	$40,000.00	$0.00	**$40,000.00**
					$40,650.00	**$0.00**	**$40,650.00**
Personnel							
	Salary and Fringe	Officer salary and benefits	1	$107,000.00	$107,000.00	$53,500.00	**$53,500.00**
	Overtime and Fringe	Officer overtime and benefits	1	$13,000.00	$13,000.00	$6,500.00	**$6,500.00**
					$120,000.00	**$60,000.00**	**$60,000.00**
Training							
	Professional Development	LETSAC	2	$700.00	$1,400.00	$0.00	**$1,400.00**
	Professional Development	DWI Conference	1	$150.00	$150.00	$0.00	**$150.00**
					$1,550.00	**$0.00**	**$1,550.00**
				Total Contract	**$162,200.00**	**$60,000.00**	**$102,200.00**

ATTACHMENTS

Document Type	Description	Original File Name	Date Added

Traffic and Highway Safety Division
TRAFFIC ENFORCEMENT APPLICATION
October 01, 2015 through September 30, 2016

(Application due by March 02, 2015)

Traffic and Highway Safety Division
P.O. Box 270
830 MoDOT Drive
Jefferson City, MO 65102
1-800-800-2358 or 573-751-4161

Agency:	Joplin Police Dept.	**Agency ORI#:**	MO0490700
Address:	303 E. 3rd St.	**Federal Tax ID#:**	446000196
		State Tax ID#:	

City:	Joplin	**State:**	MO	**Zip:**	64801-2316	**County:**	Jasper
Phone:	417-623-3131	**Fax:**	417-623-4604				
Contact:	Sgt. Ryan West	**Email:**	rwest@joplinmo.org				
Jurisdiction:	Rural	**Jurisdiction Population:**		54,000			

Targeted Population: All Drivers

Project activity for which your agency is requesting funding:

Hazardous Moving Violation

Project Title: HMV Overtime **Requested Amount:** $10,000.00

Brief Description: Fund officer overtime

Darren Gallup
Authorizing Official

Authorizing Official Signature

Captain
Authorizing Official Title

Traffic and Highway Safety Division
P.O. Box 270
Jefferson City, MO 65102
1-800-800-2358 or 573-751-4161

CITY COUNCIL AUTHORIZATION

On _____, 20___ the Council of _____

_____ held a meeting and discussed the City's participation in Missouri's Highway Safety Program.

It is agreed by the Council that the City of _____ will participate in Missouri's Highway Safety Program.

It is further agreed by the Council that the Chief of Police will investigate the financial assistance available under the Missouri Highway Safety Program for Traffic Enforcement and report back to the Council his/her recommendations. When funding through the Highway Safety Division is no longer available, the local government entity agrees to make a dedicated attempt to continue support for this traffic safety effort.

_____	_____
Council Member	Council Member
_____	_____
Council Member	Council Member
_____	_____
Council Member	Council Member
_____	_____
Council Member	Council Member

_____

Mayor

PROBLEM IDENTIFICATION

Hazardous Moving Violations (HMV) also known as aggressive driving is a serious problem on Missouri's roadways and has contributed substantially to traffic crashes, especially crashes resulting in death. Aggressive drivers are defined within Missouri's Blueprint to SAVE MORE LIVES as, "drivers of motorized vehicles who committed one or more of the following violations which contributed to the cause of a traffic crash: speeding; driving too fast for conditions; and/or following too close."

Aggressive drivers not only put their own lives at risk, but the lives of others as well. Of the 959 people killed, 67.4% were the aggressive driver and the other 32.6% were some other party in the incident. Of the 5,617 seriously injured, slightly more than one-half (53.2%) were the aggressive drivers and nearly one-half (46.8%) being some other person involved.

The Joplin Police Department investigated 5,285 traffic crashes in the city limits from 2012-2014. The City of Joplin includes city streets, several State Highways, and IS 44. Of the 5,285 crashes, 924 resulted in a serious physical injury, and another 18 resulted in a fatality.

Of the 942 crashes that resulted in a serious injury or a fatality, 257, or over 27%, had excessive speed as a contributing factor. Additionally, in 2014 the Joplin Police Department issued 10,183 citations for hazardous moving violations. Citizen Surveys indicate that the number one concern of our populace are hazardous moving violations, including speed, improper lane use, and traffic signal violations.

The City of Joplin is incorporated in two separate counties, Jasper and Newton. According to the MSHP for the time period 2011-2013, Jasper County ranked 13th in the state with 880 speed involved crashes. Newton County ranked 23rd with 559. Among Missouri cities, Joplin ranked 25th, with 302 speed involved crashes.

With the assistance of programs such as the HMV Overtime grant, we have reduced the number of crashes in Joplin to their lowest level since 1990. However, there is still work to be done.

GOALS/OBJECTIVES

In 2011-2013, there were 419,658 traffic crashes in Missouri - 15.4% involved speeding. Correlating with the national data, Missouri's problem is also more significant when examining fatal crashes—of the 2,161 fatal crashes, 38.3% involved drivers who were speeding.

Goal #1:
To decrease HMV/aggressive driving related fatalities to:
- 314 by 2013
- 299 by 2014
- 288 by 2015
- 270 by 2016

Performance Measure:
- Number of HMV/aggressive driving-related fatalities

Benchmark:
- 2013 aggressive driving-related fatalities = 308

Goal #2:
To decrease speed-related fatalities to:
- 299 by 2013
- 285 by 2014
- 272 by 2015
- 258 by 2016

Performance Measure:
- Number of speed-related fatalities

Benchmark:
- 2013 speed-related fatalities = 302

Objective:
Develop and implement a plan that focuses on hazardous moving violations (such as speeding, following too closely, driving too fast for conditions, red-light running, improper lane changes, and failure to yield) at high crash locations and corridors.

PROJECT DESCRIPTION

Project Description information will be captured in the supplemental section.

SUPPLEMENTAL INFORMATION

Question	Answer
You must answer the following questions.	
1 Does your agency have an internal safety belt policy for all personnel?	Yes
2 Does your agency report racial profiling data annually?	Yes
3 Does your agency report to STARS?	Yes
4 Does your agency report UCR information annually?	Yes
5 Has any of your officers/personnel been debarred and are therefore not eligible to receive federal funds for reimbursement of salary, fringe benefits, or overtime?	No
6 Please explain any NO answer(s) to questions 1-4:	
Please use the most current 12-months of data available for answering questions 7-12.	
7 Total number of DWI violations written.	690
8 Total number of speeding violations written.	1806
9 Total number of HMV violations written.	10,183
10 Total number of child safety/booster seat violations written.	109
11 Total number of safety belt violations written.	3381
12 Total number of sobriety checkpoints hosted.	5
Use the most current three years crash data for questions 13-23.	
13 Total number of traffic crashes.	5285
14 Total number of traffic crashes resulting in a fatality.	18
15 Total number of traffic crashes resulting in a serious injury.	924
16 Total number of speed-related traffic crashes.	257
17 Total number of speed-related traffic crashes resulting in a fatality.	5
18 Total number of speed-related traffic crashes resulting in a serious injury.	72
19 Total number of alcohol-related traffic crashes.	168

20 Total number of alcohol-related traffic crashes resulting in a fatality. 4

21 Total number of alcohol-related traffic crashes resulting in a serious injury. 53

22 Total number of unbuckled fatalities. 4

23 Total number of unbuckled serious injuries. 131

Enter your agency's information below.

24 Total number of commissioned law enforcement officers. 112

25 Total number of commissioned patrol and traffic officers. 69

26 Total number of commissioned law enforcement officers available for overtime enforcement. 105

27 Total number of vehicles available for enforcement. 48

28 Total number of radars/lasers. 46

29 Total number of in-car video cameras. 26

30 Total number of PBT's. 21

31 Total number of Breathalyzers. 5

The following information explains the strategies your agency will use to address the traffic crash problem. This information is considered to be the Project Description and should be specific to the crash problem.

32 Identify the primary enforcement locations.

Enforcement locations will focus on high-crash streets (Range Line, 7th Street, 32nd Street, and IS 44) but may shift to other areas or city-wide as needs arise. Vehicle safety checkpoints may be conducted periodically; their placement will be dependent upon traffic volume and the relative convenience and safety that the location offers drivers and officers.

33 Enter the months in which enforcement will be conducted.

HMV grant enforcement is conducted March through December. Joplin crashes decrease by 19% from Feb to March when looking at 3 year averages. For this reason, enforcement efforts will focus on the warmer months, and December due to holiday traffic.

34 Enter the number of enforcement periods your agency will conduct each month. 2

35 Enter the days of the week in which enforcement will be conducted.

By far, the highest crash day in Joplin is Friday. The second highest day of the week for crashes is Thursday. Therefore, most details will be conducted on Thursdays and Fridays. As needed, Saturdays will also be worked, such as during state-wide campaigns.

36 Enter the time of day in which enforcement will be conducted.

Joplin's highest crash times are from noon to 6:00pm. Enforcement efforts will focus on this time range.

37 Enter the number of officers assigned during the enforcement period. 4

38 If equipment, promotional items, or supplies are requested to conduct this project, explain below why it is needed and how it will be used.

n/a

PROJECT EVALUATION

The MHTC will administratively evaluate this project. Evaluation will be based, at a minimum, upon the following:

1. Law enforcement compliance with state UCR, Racial Profiling, and STARS reporting requirements (law enforcement contracts only)
2. Timely submission of monthly reimbursement vouchers and appropriate documentation to support reimbursement for expenditures (i.e., personal services, equipment, materials)
3. Timely submission of periodic reports (i.e., monthly, quarterly, semi-annual) as required
4. Timely submission of the Year End Report of activity (due within 30 days after contract completion date)
5. Attaining the Goals set forth in this contract*
6. Accomplishing the Objectives* established to meet the project Goals, such as:
   - Enforcement activities (planned activities compared with actual activities)
   - Programs (number and success of programs held compared to planned programs, evaluations if available)
   - Training (actual vs. anticipated enrollment, student evaluations of the class, student test scores on course examinations, location of classes, class cancellation information)
   - Equipment purchases (timely purchase of equipment utilized to support and enhance the traffic safety effort; documentation of equipment use and frequency of use)
   - Public awareness activities (media releases, promotion events, incentive items or education materials produced or purchased)
   - Other (any other information or material that supports the Objectives)
7. The project will be evaluated by the Traffic and Highway Safety Division through annual crash analysis.

Evaluation results will be used to determine:
- The success of this type of activity in general and this particular project specifically;
- Whether similar activities should be supported in the future; and
- Whether grantee will receive funding for future projects.

*Evaluation and requests to fund future projects will not be based solely on attaining Goals and/or Objectives if satisfactory justification is provided.

BUDGET

Category	Item	Description	Quantity	Unit Cost	Total	Match	Total Requested
Personnel							
	Overtime and Fringe	Officer overtime and fringe benefits.	1	$10,000.00	$10,000.00	$0.00	**$10,000.00**
					$10,000.00	**$0.00**	**$10,000.00**
				Total Contract	**$10,000.00**	**$0.00**	**$10,000.00**

ATTACHMENTS

Document Type	Description	Original File Name	Date Added

Attachment A

2012 International Building Code Changes of Interest

- Backwater Valves – Will now be required to be installed in all new or replaced sewer lines.
- Identification of Fire and Smoke Separation Walls – Fire wall, fire barriers and other walls required to have protected openings/penetrations must be identified above ceiling where concealed space is created. Size and location of identifying markings are specified.
- Furniture Storage and Display in Groups F-1, M, and S-1 Occupancies – Automatic sprinkler systems are now required in occupancies where upholstered furniture or mattresses are manufactured, stored, or displayed regardless of size.
- Group E Fire Alarm Systems – An emergency voice / alarm communications system is now required in Group E occupancies with an occupant load of 30 or more.
- Carbon Monoxide Alarms – In new and existing buildings, carbon monoxide alarms are now required in Group R and I occupancies with fuel-burning appliances or attached garages.
- Exception 9 Manually Operated Horizontal Sliding Doors – Now permitted as a means of egress element in occupancies other than Group H, provided the occupant load is limited.
- Electromagnetically Locked Egress Doors – Electromagnetically locked egress doors may be used on panic hardware doors, as long as operation of hardware interrupts power to electromagnet.
- Stair Handrails in Group R-2 and R-3 – Within dwelling and sleeping units of Groups R-2 & R-3, handrails required on four or more risers.
- Curbs Used as Edge Protection at Ramps – Minimum required height of 4 inches for curbs used as edge protection at the side of ramps.
- Single Means of Egress from Group R-2 Units – Occupant load threshold at which second means of egress is required from R-2 has been increased from 11 to 21 in buildings in which an automatic sprinkler system is provided.
- Minimum Kitchen Floor Area – Required minimum of 50 SF has been deleted.

- Live Loads for Decks and Balconies – Decks and balconies now have the same live load as the occupancy they serve.

2012 International Residential Code Changes of Interest

- Backwater Valves – Will now be required to be installed in all new or replaced sewer lines.
- Braced wall panel design options next to garage doors – There are now three specified methods of constructing a narrow braced wall panel next to a large opening or portal such as a garage door opening. The minimum width of panel allowed with any of these methods is 16" and gets greater depending on the number of stories, ceiling height etc.
- Carbon monoxide alarms – Carbon monoxide alarms will now be required outside each sleeping area in the immediate vicinity of the bedroom in dwelling units with fuel-fired appliances installed and/or dwellings with attached garages.
- Fire protection of floors – Floor assemblies shall be provided with a ½ inch gypsum wall board membrane, or equivalent on the underside of the flooring framing member. This is required in unfinished basements or crawl spaces where fuel fired appliances are installed. This requirement is exempt as long as the floor framing members are dimension or structural composite lumber 2x10's or greater.
- Any balcony, deck, or porch accessible from the inside of the dwelling unit shall have at least one receptacle outlet installed within the perimeter of the balcony, deck, or porch.
- Habitable Attic Defined – Attic spaces with a floor system installed that meet the minimum size requirements will now be required to have an emergency egress and may require a smoke detector.
- Design Required on Retaining Walls – Retaining walls supporting more than 48" of unbalanced fill without permanent lateral support at top and bottom may require engineered drawings.
- Flashing – Pan flashing will now be required on all window and door openings when not provided by the manufacturer.
- Above Ground Duct Systems – Return air plenums will no longer be allowed to be placed in the stud cavities of outside walls.
- Independent garage HVAC system – Furnaces and air-handling systems that supply air to living spaces shall not supply air to or return air from garage.
- Doors between garage and dwelling unit will now require self-closing devices.

COUNCIL BILL NO. 2015-362 ORDINANCE NO.

AN ORDINANCE amending Chapter 26 Buildings and Building Regulations by repealing and enacting a new Article III, Building Code, and setting a date when this ordinance shall become effective.

NOW, THEREFORE, BE IT ORDAINED BY THE COUNCIL OF THE CITY OF JOPLIN, MISSOURI, as follows:

Section 1. That Chapter 26, Buildings and Building Regulations, Article III Building Code, be repealed, and a new Chapter 26, Buildings and Building Regulations, Article III, Building Code, be enacted to read as follows:

"ARTICLE III BUILDING CODE*

Sec. 26-61. - Building code adopted.

The **2012** ~~**2006**~~ Edition of the International Building Code **including Appendix Chapters C, F, G, I, J**, as supplemented or amended, is hereby adopted and made a part hereof by reference as the basic building code of the city. Not less than three copies of said code as supplemented or amended, duly certified, have been and now are filed in the office of the city clerk.

Sec. 26-62. - Amendments to the International Building Code.

The building code adopted by **section 26-61** of this article is hereby amended, changed, and altered, as follows:

Section 101.1 is amended by inserting ***[City of Joplin, Missouri]***

Section 105.2 - "Building Item 2" ***replace 120 square feet with 200 square feet.***

Chapter 13 Energy Efficiency is deleted in its entirety.

Section 1405.10 is amended by adding the following paragraph:
Material commonly known as "corrugated sheet iron"; "corrugated sheet steel", "strong barn", etc., will not be permitted to be used as an exterior ~~***(or interior)***~~ finish on any commercial or residential building. It shall also not be permitted or allowed as roofing material on any type building or structure.

Section ***1608*** ~~***Section 1608.3***~~ of the building code is hereby amended to provide that 30 pounds per square foot, non-reduced snow load be utilized in determining the design snow loads for roofs, in no case, shall the design ***roof*** snow load be less than 30 pounds per square foot.

Section 1612.3 is amended by inserting: **[City of Joplin].**

Section 1612.3 is amended by inserting: [***November 2, 2012***].

Section ***1809.5*** ~~***1805.2.1***~~ is amended by adding the following paragraphs to the existing section.
The depth of footings for frost protection shall be 30 inches from finish grade to bottom of footing.

Accessory - residential or commercial storage type buildings with approved treated skids or the "portable" type for moving from one location to another, are exempt from the footing requirements if under 200 square feet, but shall be required to be anchored or tied down in an approved manner to prevent possible overturning from ***a minimum 90 mph*** wind.

Section 3109.4 is amended by adding the following paragraph:
Locations. Private swimming pools shall not encroach on any front or side yard required by the basic code, abridged code or the governing zoning law, except by specific rules of the community in which it may be located. No wall of a swimming pool shall be located less than three feet from any rear or side property line, ***12 feet from any primary or accessory structure,*** or ten feet from any street property line, except by specific rules of the community in which it may be located.

Section 3410.2 is amended by inserting: **[January 17, 1955].**
Chapter 35 – Referenced Standards NFPA reference number ~~***72-10***~~ *is amended to* ***72-13****.*

Sec. 26-63. - Penalties.

Notwithstanding any other provision of this article, a person violating any provisions of this article or obstructing its enforcement shall be deemed guilty of a misdemeanor, and upon conviction thereof in municipal court, shall be subject to punishment as provided in section 1-5 of the Joplin City Code.

Sec. 26-66. - Residential code adopted.

The ***~~2006~~* 2012** Edition of the International Residential Code for One and Two Family Dwellings including Appendix Chapters A, B, C, D, G, H, I, J, M, N, ***O, P,*** Q, as supplemented or amended, is hereby adopted and made a part hereof by reference as the basic residential building code of the city. Not less than three copies of said code as supplemented or amended, duly certified, have been and now are filed in the office of the city clerk and the same is incorporated as if fully set out at length in this article.

Sec. 26-67. - Amendments to the International Residential Code.

The [residential] building code adopted by section 26-66 of this article is hereby amended, changed, and altered, as follows:

Section R101.1 is amended by inserting: [**City of Joplin, *Missouri.***].

Section R104.11 is amended by adding the following paragraph to the existing section:
The alternative method commonly known as "pole barn" or "laminated pole" type structures shall be limited to commercial buildings and accessory buildings only and not for residential dwelling units.

Section R105.2 is amended by deleting item 2 in its entirety.

Section R105.2 is amended by deleting item 5 in its entirety.

Table R301.2 (1) is amended by inserting:

GROUND SNOW LOAD	***30 psf***
WIND SPEED	***90 mph***
TOPOGROPHIC EFFECTS	***NO***
SEISMIC DESIGN CATEGORY	***A***
WEATHERING	***Severe***
FROST LINE DEPTH	***30 inches***
TERMITE	***Moderate to heavy***
WINTER DESIGN TEMP	***9 degrees***
ICE BARRIER UNDERLAYMENT REQUIRED	***No***
FLOOD HAZARDS	***December 8, 1976***
	November 2, 2012 ***FIRM panels, 29097CINDOC0C, 29097C0142E, 29097C0144E, 29097C0161E, 29097C0163E, 29097C0255E, 29097C0256E, 29097C0257E, 29097C0258E, 29097C0259E, 29097C0266E, , 29097C0267E, 29097C0268E, 29097C0269E, 29097C0276E, 29097C0277E, 29097C0278E, 29097C0279E, 29097C0283E, 29097C0284E, 29097C0285E, 29097C0286E, 29097C0287E, 29097C0288E, 29097C0295E***
AIR FREEZING INDEX	***500***
MEAN ANNUAL TEMP	***55 degrees F***

Section R403.1.1 is amended by adding wording: "All footings for residential construction are to be at least 16 inches in width and eight inches in thickness."

R403.1.6 Foundation anchorage. Replace "…anchor bolts spaced a maximum of 6 feet on center" with ***"anchor bolts spaced a maximum of four (4) feet on center".***

Section ***R 404.1.1.1 ~~R404.1.1~~*** Masonry foundation walls is amended to read as follows:
"*R 404.1.1.1 ~~R404.1.1~~* Masonry foundation walls. Concrete masonry and clay masonry foundation walls shall be constructed as set forth in Table R404.1.1(1), R404.1.1(2), R404.1.1(3) or R404.1.1(4) and shall also comply with the provisions of Section R404 and the applicable provisions of Sections R606, R607 and R608. In Seismic Design Categories D0, D1 and D2,

concrete masonry and clay masonry foundation walls shall also comply with Section R404.1.4. Rubble stone masonry foundation walls shall be constructed in accordance with Sections R404.1.8 and R607.2.2. Rubble stone masonry walls shall not be used in Seismic Design Categories D0, D1 and D2.

Regardless of the height of unbalanced backfill referenced in the tables, every masonry foundation shall have a minimum of one #4 reinforcing bar a maximum of every 4′ on center that is securely anchored in the supporting footing under the wall. The block cells that contain the reinforcing steel and the anchor bolts shall be filled with concrete. If the tables require more than this minimum, then the requirements of the tables shall apply."

Section R802.11 Roof tie-down. is amended to read by adding the following paragraph:
"All trusses and rafters shall be fastened to the supporting wall assembly by mechanical connections capable of providing the resistance required in Table R802.11. In no case shall the connections be made by solely toe-nailing."

Chapter 11 Energy Efficiency is deleted in its entirety and replaced with the Chapter 11 provisions of the 2006 International Residential Code.
Exception: The insulation requirement for floors shall not be required.

Section R3008 Backwater Valves is amended to read as follows:
"All plumbing fixtures shall be protected by a backwater valve installed in the building drain."

Section ***E3406.11.1*** ~~***E3306.10.1***~~*, Exception* is amended to read:
"Splices shall be permitted within surface-mounted raceways that have removable covers, subject to fill requirements."

Section ***E3608*** ~~***E3508***~~ shall be amended by adding the following paragraph at the beginning:
"The primary grounding electrode for all new construction shall be a concrete-encased electrode as defined by section ***E 3608.1.2*** ~~**E3508.1.2**~~."

Sec. 26-68. - Mechanical code adopted.

The ***2012*** ~~**2006**~~ Edition of the International Mechanical Code including Appendix Chapters A, as supplemented or amended, is hereby adopted and made a part hereof by reference for the purpose of regulating and controlling the installation of mechanical systems, including alterations, repairs, replacement, equipment, appliances, fixtures, fittings, and/or appurtenances thereto, including ventilating, heating, cooling, air conditioning and refrigeration systems, incinerators and other energy related systems. Not less than three copies of said code as supplemented or amended have been and now are filed in the office of the city clerk and the same is incorporated as if fully set out at length in this division.

Sec. 26-69. - Amendments to the International Mechanical Code.

The mechanical code adopted by section 26-68 of this article is hereby amended, altered, and changed as follows:

Section 101.1 is amended by inserting the name of this jurisdiction, "City of Joplin, Missouri."

Section 106.5.2 is amended to read as follows:
106.5.2 Fee Schedule: The permit fees for all mechanical work shall be as indicated in section Article IV of Chapter 26 of the Joplin City Code.

Section 106.5.3, Fee Refunds, is deleted.

Section 108.4 is amended to read as follows:
108.4 Violation Penalties: Any person who shall violate a provision of this code or who shall fail to comply with any of the requirements thereof, or who shall install mechanical work in violation of an approved plan or directive of the Building Official or his designee or of a permit or certificate issued under the provisions of this code, shall be guilty of a misdemeanor, punishable as provided in section 1-5 of the Joplin City Code.

Section 108.5 is amended to read as follows:

108.5 Stop Work Orders: Any person who shall continue any mechanical work in or about the structure after having been served with a stop work order, except such work as he/she is directed to perform to remove a violation or unsafe conditions, shall be subject to punishment as provided in section 1-5 of the Joplin City Code.

Sec. 26-70. – Fuel and Gas Code adopted.

The ***2012*** ~~**2006**~~ Edition of the International Fuel Gas Code including Appendix Chapters A, B, C, as supplemented or amended, is hereby adopted and made a part hereof by reference for the purpose of regulating and governing fuel gas systems and gas fired appliances in the city. Not less than three copies of said code as supplemented or amended, duly certified, have been and now are filed in the office of the city clerk and the same is incorporated as if fully set out at length in this chapter.

Sec. 26-71. - Amendments to the International Fuel and GasCode.

The Fuel Gas Code adopted by section 26-70 of this article is hereby amended, changed, and altered, as follows:

Section-101.1. Insert: [City of Joplin].

Section ***106.6.2*** ~~***106.5.2***~~. Insert: [Fee schedule from Article IV of Chapter 26 of the Joplin City Code].

Section ***106.6.3*** ~~***106.5.3.***~~ Delete provision number 2 and number 3.

Section 108.4 is hereby amended to read as follows:

108.4 Violations and Penalties: Any person who shall violate a provision of this code, fail to comply with any of the requirements thereof or erect, install, alter or repair work in violation of the approved construction documents or directive of the code official, or of a permit or certificate issued under the provisions of this code, shall be guilty of a misdemeanor, punishable as provided in Section 1-5 of the Joplin City Code.

Section 108.5 is hereby amended to read as follows:

108.5 Stop work orders: Any person who shall continue any fuel gas work in or about the structure after having been served with a stop work order, except such work as he/she is directed to perform to remove a violation or unsafe conditions, shall be subject to punishment as provided in section 1-5 of the Joplin City Code.

Sec. 26-72. - Plumbing code adopted.

The ***2012*** ~~**2006**~~ Edition of the International Plumbing Code including Appendix Chapters B, ***C,*** D, E, F, ~~***G,***~~ as supplemented or amended, is hereby adopted and made a part hereof by reference for the purpose of prescribing regulations governing plumbing. Not less than three copies of said code as supplemented or amended have been and now are filed in the office of the city clerk and the same is incorporated as if fully set out at length in this division.

Sec. 26-73. - Amendments to the International Plumbing Code.

The plumbing code adopted by section 26-72 of this article is hereby amended, altered, and changed in the following respects:

Section 101.1 is amended by inserting: [City of Joplin, ***Missouri***].

Section 106.6.2 is amended to read as follows:

106.6.2 Fee Schedule. The permit fees for all plumbing work shall be as indicated in Article IV of Chapter 26 and 118-235 of the Joplin City Code.

Section 106.6.3, Fee Refunds, ***is deleted***. ~~Paragraphs numbered 2 and 3 are deleted.~~

Section 108.4 is amended to read as follows:

108.4 Violation Penalties: Any person who shall violate a provision of this code or who shall fail to comply with any of the requirements thereof or who shall install plumbing work in violation of an approved plan or directive of the plumbing official, or of a permit or certificate issued under the provisions of this code, shall be guilty of a misdemeanor punishable as provided in Section 1-5 of the Joplin City Code.

Section 108.5 is amended to read as follows:

108.5 Stop Work Orders: Any person who shall continue any plumbing work in or about the structure after having been served with a stop work order, except such work as he is directed to perform to remove a violation or unsafe conditions, shall be subject to punishment as provided in Section 1-5 of the Joplin City Code.

Section 701.2 is added to read as follows:

701.2.1 ~~701.2~~ **Sewer** Required: See **Section *118-83* ~~118-81~~,** et seq., of the Joplin City Code pertaining to availability of sanitary sewer.

Section 715 is amended to read as follows:

715.1 Sewage backflow: All plumbing fixtures shall be protected by a backwater valve installed in the building drain.

*Section **903.1 ~~904.1~~*** is amended by inserting: [12 inches].

Sec. 26-74. - Electrical code adopted.

The **2011 ~~2008~~** Edition of the National Electrical Code for electrical wiring and apparatus as recommended by the National Fire Protection Association, as supplemented or amended, is hereby adopted and made a part hereof by reference. Not less than three copies of said code as supplemented or amended have been and now are filed in the office of the city clerk and the same is incorporated as if fully set out at length in this division.

Sec 26-79- Existing Building Code Adopted

The 2012 Edition of the International Existing Building Code including appendix B as supplemented or amended, is hereby adopted and made a part hereof by reference for the purpose of prescribing regulations governing energy conservation requirements. Not less than three copies of said code as supplemented or amended have been and now are filed in the office of the city clerk and the same is incorporated as if fully set out at length in this division.

Sec. 28-80. – Amendments to the Existing Building Code

The Existing building code adopted by section 26-79 of this article is hereby amended, changed, and altered, as follows:

Section 101.1 is amended by inserting [City of Joplin, Missouri]

Section 113.4 is hereby amended to read as follows:

113.4 Violations and Penalties: Any person who shall violate a provision of this code, fail to comply with any of the requirements thereof or erect, install, alter or repair work in violation of the approved construction documents or directive of the code official, or of a permit or certificate issued under the provisions of this code, shall be guilty of a misdemeanor, punishable as provided in Section 1-5 of the Joplin City Code.

Section 106.4 is hereby amended to read as follows:

106.4 Violations and Penalties: Any person who shall violate a provision of this code, fail to comply with any of the requirements thereof or erect, install, alter or repair work in violation of the approved construction documents or directive of the code official, or of a permit or certificate issued under the provisions of this code, shall be guilty of a misdemeanor, punishable as provided in Section 1-5 of the Joplin City Code."

Section 2. This ordinance shall become effective on November 10, 2015.

PASSED BY THE COUNCIL OF THE CITY OF JOPLIN, MISSOURI, this _____ day of _____, 2015.

_____
Michael L. Seibert – Mayor

ATTEST:

_____
Barbara Hogelin – City Clerk

APPROVED AS TO FORM

_____
Peter C. Edwards, City Attorney

City of **JOPLIN** City Council Agenda Item

Requested Council Meeting Date: October 5, 2015

Item: COUNCIL BILL NO. 2015-362
Originating Department: BUILDING REGULATIONS

Attachments: 1) Council Bill No. 2015-362
2) Attachment A

Building Regulations: Brian Wicklund
Planning and Community Development Manager: Troy Bolander
Finance Department: Leslie Haase
City Attorney: Peter C. Edwards
City Manager: Samuel L. Anselm

Recommended Action: Approval of the adoption of the 2012 ICC Building Codes and the 2011 National Electrical Code along with appendix sections and amendments with an effective date of November 1, 2015.

Summary: The City of Joplin updates its Building Codes approximately every six (6) years. Our last update of the codes took place in 2008, at which time the 2006 editions of the International Codes was adopted. At this time we are proposing to adopt the 2012 editions of the International Codes, and the 2011 edition of the National Electrical Code.

By keeping our building codes current we receive a higher rating for that particular item from the I.S.O, as well as staying current with new life safety standards. Today we use and enforce modern Building Codes that address structural, fire, electrical, and mechanical safety as well as health and security issues. Our job is to make sure homes, schools, businesses, and other structures are safe places to live, work, and play. We provide inspection of construction projects at several stages to ensure that happens. This Council Bill adopts the following Codes:

1. **2012 International Building Code** addresses design and installation of building systems with requirements that emphasize performance.

2. **2012 International Residential Code** brings uniformity to construction of one and two-family dwellings and townhouses up to three stories.

3. **2012 International Plumbing Code** sets minimum standards for fixtures, piping, fittings, and devices, as well as design and installation methods for water supply, sanitary drainage, and storm drainage.

4. **2012 International Mechanical Code** comprehensively regulates mechanical systems and equipment including heating, ventilation, air-conditioning, exhaust systems, chimneys and vents, ducts, appliances, boilers, water heaters, refrigeration, hydronic piping, and solar systems.

5. **2012 International Fuel and Gas Code** sets standards for fuel gas systems and gas fired appliances using prescriptive and performance related provisions.

6. **2011 Edition of the National Electrical Code** regulates the installation of fixtures, wiring, panels, etc., and the distribution of electrical power within all structures.

7. **2012 International Existing Building Code** is intended to provide alternative approaches to remodeling, repair or alteration of existing buildings. This code allows for options for controlled departure from full compliance with the International Codes dealing with new construction, while maintaining basic levels for fire prevention, structural and life safety features of the rehabilitated building. The City has not adopted this code in the past. However, we have adopted the International Building Code Chapter 34, which is excerpted from this code. By adopting the full code, we can take advantage of all of the referenced materials in the code and continue to look at our existing and historic buildings to lessen the financial burden of restoration without a reduction in the life safety aspects of those buildings.

A summary of changes that may be of interest is attached hereto as Attachment A.

Recommendation: Staff recommends approval of this Council Bill.

COUNCIL BILL NO. 2015-364 ORDINANCE NO.

AN ORDINANCE amending Chapter 58, Fire Prevention and Protection, by repealing and enacting a new Section 58-1, Bonfires and outdoor rubbish fires, and by repealing and enacting a new Article II, Fire Prevention Code, and setting a date when this ordinance shall become effective.

NOW, THEREFORE, BE IT ORDAINED BY THE COUNCIL OF THE CITY OF JOPLIN, MISSOURI, as follows:

Section 1. That Chapter 58, Fire Prevention and Protection, Article I, In General, Section 58-1, be repealed, and a new Chapter 58, Fire Prevention and Protection, Article I, In General, Section 58-1, be enacted to read as follows:

"Sec. 58-1. - Bonfires and outdoor rubbish fires.

No person shall light, kindle or maintain any residential vegetative waste fire or a recreational bonfire, or authorize any open burning, without a permit from the fire chief or his designee.

(1) Such permitted fires shall be limited to piles in size as follows:

a. On any residential lot less than ¾ acre in size, the size of any pile shall be less than three feet in diameter by two feet high.

b. On any lot of ¾ acre or more in size but less than five acres, the size of any piles shall be less than 12 feet in diameter by six feet high and must have clearance of at least 200 feet from any structure.

c. Burning is allowed during daylight hours only.

(2) Burning relating to land clearing may be allowed at the discretion of the fire chief or his designee only upon the following conditions:

a. Any person wishing to conduct a burn related to land clearing must submit a detailed plan for the burn site with 24-hour contact information for the supervisor of the burn site.

b. Such a person must also obtain a permit from the Missouri Department of Natural Resources prior to receiving any permit from the City of Joplin.

c. Such a person must obtain an operation permit from the City of Joplin for each three days which the burn will be operating. The permit fee shall be fifty $50.00 per each three-day period.

d. Only burns using air curtain destructors shall be allowed.

e. Such a person must insure that the burn is supervised by at least one person continuously when the burn is active.

f. Such person must insure that a method of completely extinguishing the burn is present on-site at all times the burn is active.

g. No such permit shall issue unless proper clearance is present. For purposes of this article proper clearance shall be at least 300 yards from any structure or paved roadway.

(3) Burning of vegetative waste material or rubbish for disposal or warming during construction, demolition of buildings or structures is strictly prohibited. Exceptions will be made for contained outdoor cooking fires, barbeque or smoking fires within approved grills, smokers, spits, fire pans, chimneys or outdoor fireplaces.

(4) The fee for a burn permit is set out in section 58-68 of this Code."

Section 2. That Chapter 58, Fire Prevention and Protection, Article II, Fire Prevention Code, Division 2, International Fire Code, be repealed, and a new Chapter 58, Fire Prevention and Protection, Article II, Fire Prevention Code, Division 2, International Fire Code, be enacted to read as follows:

"Division 2. International Fire Code

Sec. 58-51. - Adopted.

The ~~**2006**~~ **2012** Edition of the International Fire Code and appendices B, C, D, F, G, **& I**, as supplemented or amended, is hereby adopted and made a part hereof by reference for the purpose of prescribing regulations governing conditions hazardous to life and property from fire or explosion. Not less than three copies of said code as supplemented or amended have been and now are filed in the office of the city clerk and the same is incorporated as if fully set out at length in this division.

Sec. 58-52. - Definitions.

(a) Whenever the word "municipality" is used in the fire prevention code adopted by this division, it shall be held to mean the city.

(b) Wherever the term "corporation counsel" is used in the fire prevention code adopted by this division, it shall be held to mean the city attorney.

Sec. 58-53. - Amendments.

The fire prevention code adopted by the provisions of this division is hereby amended, altered, and changed in the following respects:

Section 101.1 is amended by inserting the name of this jurisdiction, "City of Joplin, Missouri."

Section 104.6.2 is amended by adding "The fire code official or his designees shall perform annual fire safety inspections of each A, B, M, F, I, E, H, S, R3 daycare occupancies in the City limits of Joplin & R1, R2, R4 occupancies.

Section ~~***109.3***~~ **109.4** is amended by inserting: [Misdemeanor, $500.00, 100 days].

Section 111.4 is amended by inserting: [$25.00, $500.00].

Section 307.1 is amended to read "307.1 General. See Ordinance Section 58-1 of the City of Joplin, Code of Ordinances.

Section 505.1 is amended to read "505.1 Address Numbers. See Ordinance Section 106-137 of the City of Joplin, Code of Ordinances."

Section ~~***3301.1***~~ **5601.1** is amended to read as follows: "The provisions of this chapter and Ordinances 58-62 and 58-63 of the City of Joplin, Code of Ordinances, shall govern the possession, manufacture, storage, handling, sale and use of explosives, explosive materials, fireworks, and small arms ammunition."

Chapter 80 Referenced Standards

Section NFPA ~~**72-10**~~ is amended to **72-13**

Sec. 58-54. - Enforcement.

The fire prevention code shall be enforced by the bureau of fire prevention.

Sec. 58-55. - Violations; penalty.

(a) Any person who shall violate any of the provisions of the fire prevention code adopted by this division or fail to comply therewith, or who shall violate or fail to comply with any order duly made thereunder, or who shall build in violation of any detailed statement of specifications or plans submitted and approved thereunder, or any certificate or permit issued thereunder, and from which no appeal has been taken within the time fixed in this division, shall severally, for each and every such violation and noncompliance respectively, be guilty of a misdemeanor, punishable as provided in section 1-5 of the Joplin City Code. The imposition of one penalty for any violation shall not excuse the violation or permit it to continue, and all such persons shall be required to correct or remedy such violations or defects within a reasonable time. When not otherwise specified, each ten days that prohibited conditions are maintained shall constitute a separate offense.

(b) The application of the penalty set out in subsection (a) of this section shall not be held to prevent the enforced removal of prohibited conditions.

Sec. 58-56. - Modifications.

The fire chief or his designee shall have power to modify or grant variance to any of the provisions of the current adopted fire code upon application in writing of the owner or lessee, or his duly authorized agent, when there are practical difficulties in carrying out the strict letter of the fire prevention code; provided that the spirit of such code shall be observed, public safety secured with equal or greater protection, and substantial justice done. The particulars of such modification or variance, when granted or allowed, and the decision of the fire chief or his designee thereon, shall be entered upon the records of the fire department, and a signed copy shall be furnished to the applicant.

Sec. 58-57. - New materials, processes or occupancies requiring permits.

The building board of appeals, with the fire chief or his designee and the chief building official, shall act as a committee to determine and specify, after giving affected persons an opportunity to be heard, any new materials, processes or occupancies which shall require permits, in addition to those enumerated in the fire prevention code.

Sec. 58-58. - Appeals.

Whenever the fire chief or his designee shall disapprove an application or refuse to grant a permit applied for, or when it is claimed that the provisions of the fire prevention code do not apply or that the true intent and meaning of the code have been misconstrued or wrongly interpreted, the applicant may appeal in writing the decision of the fire chief or his designee to the building board of appeals within 30 days from the date of the decision appealed. The applicant may appeal in writing the decision of the building board of appeals to the Joplin City Council within 30 days from the date of the building board decision.

Sec. 58-59. - Reserved.

Sec. 58-60. - Geographic Limits.

That the geographic limits referred to in certain sections of the ~~**2006**~~ **2012** International Fire Code are hereby established as follows:

Section ~~***3404.2.9.5.1***~~ ***5704.2.9.6.1*** The storage of Class I and Class II liquids in above-ground tanks (exceeding 660 gallons) outside of buildings is prohibited in the City limits of Joplin, Missouri.

Section ~~***3804.2***~~ **6104.2** The storage of liquefied petroleum is restricted for protection of heavily populated or congested areas in the City limits of Joplin, Missouri.

Section ~~***3301***~~ **5601**The storage of explosives shall be restricted and comply with provisions set forth in Chapter ~~**33**~~ **56** of the International Fire Code.

Section ~~*3301.1.3*~~ **5601.3** Possession, manufacture, storage, sale, handling, and use of fireworks shall be in accordance with Chapter ~~**33**~~ **56** of the International Fire Code and all Joplin City ordinances pertaining to fireworks.

Sec. 58-61. - Reserved.

Sec. 58-62. - Routes for vehicles transporting explosives and blasting agents.

The routes for vehicles transporting explosives and blasting agents are hereby established as designated by the traffic engineer.

Sec. 58-63. - Routes for vehicles transporting hazardous chemicals or other hazardous materials.

Vehicles transporting hazardous materials and chemicals shall be routed to avoid congested traffic in densely populated areas. The routes referred to in this section are to be established as designated by the traffic engineer.

Sec. 58-64. - Compliance with fireworks regulations.

Notwithstanding the provisions of the ~~**2006**~~ **2012** International Fire Code adopted by this division, all persons shall comply in all respects with the provisions of sections 58-65 through 58-67 relative to fireworks and devices of like character.

Sec. 58-65. - Possession and use of fireworks generally.

(a) No person shall set off, ignite, discharge, use, or possess for such purpose, 1.4G (formerly known as Class C) or 1.3 G (formerly known as Class B) fireworks which include: any toy cannon, blank cartridge, firecracker, torpedo, pinwheel, pyrotechnic materials, or any explosive material used in fireworks displays or material with substance consisting of chlorate of potash and sulphur, or device for discharging or exploding such objects or substances by concussion or ignition, within the city or any of the city parks, except on July 1, 2, 3 and 4 of each year, and on July 5 when July 4 occurs on Sunday and July 5 is celebrated as the official holiday, between the hours of 12:00 noon and 11:00 p.m. Exceptions: 1.4G party favor devices, such as champagne bottles, poppers, snaps, and confetti pistols.

(b) The exceptions set out in subsection (a) of this section shall not be construed to permit the discharge, use or possession of bottle rockets. No person, at any time, shall set off, ignite, discharge or use, or possess for such purpose, bottle rockets within the city or any of the city parks, except as provided in section 58-67. For the purposes of this section, bottle rockets shall be defined as any device that contains less than one-eighth ounce of chlorate of potash and sulphur with a total body weight of less than one-half ounce and with a body length of less than two inches, including any modifications to such device, with a launching stick attached to the body.

(c) In addition, no person at any time, shall set off, ignite, discharge or use, or possess for such purpose, Chinese lanterns or sky lanterns within the city or any of the city parks. For the purpose of this section, Chinese lanterns shall be defined as any device constructed from oiled rice paper or lightweight paper on a bamboo or wire frame, and contains a small candle or fuel cell composed of a waxy flammable material or any other type of fuel cell where when lit, the flame heats the air inside the lantern, thus lowering its density and causing the lantern to rise into the air.

~~**(c)**~~ **(d)** The fire chief or his designee, in the interest of public safety, may issue an order prohibiting discharge of fireworks as described in this section within the city limits of Joplin or on property owned by the city. During the time set forth in such order, it shall be unlawful for any person to discharge fireworks in the area designated in the fire chief's order.

Sec. 58-66. - Sale of fireworks.

(a) *Permit required; sale near fuel dispensing stations.* No person shall sell, offer for sale or give away any of the articles described in section 58-65 without first having secured from the director of finance a fireworks sales permit, the cost of which shall be $50.00 per calendar year or for any portion thereof. Such permit shall be publicly displayed in a suitable location for inspection at the shop, store or stand in which the articles referred to are for sale. None of such articles shall be sold in any shop, store or stand within 300 feet of any fuel dispensing station. This shall include but is not limited to places of retail or wholesale business engaged in the sale of gasoline, diesel, propane or natural gas.

(b) *Days when sales may be made.* None of the articles described in section 58-65 shall be sold in any calendar year prior to 12:00 midnight on June 30 or after 12:00 midnight on July 4.

(1) Exceptions: 1.4G favor devices such as champagne bottles, poppers, snaps, and confetti pistols.

(c) *Notice of restrictions on possession and use.* Any person who shall sell or offer for sale fireworks in the city shall post a notice in at least one location in a publicly conspicuous place at the shop, store or stand in which the articles referred to in section 58-65 are for sale upon such notice form as provided by the director of finance, to read substantially as follows:

NOTICE

Joplin Code, section 58-65. Prohibitions on possession and use of fireworks:

(a) No person shall set off, ignite, discharge, use, or possess for such purpose, any 1.4G (formerly known as Class C) or 1.3G (formerly known as Class B) fireworks which include: any toy cannon, blank cartridge, firecracker, torpedo, pinwheel, pyrotechnic materials, or any explosive material used in fireworks displays or material with substance consisting of chlorate of potash and sulphur, or device for discharging or exploding such objects or substances by concussion or ignition, within the city or any of the city parks, except on July 1, 2, 3 and 4 of each year, and on July 5 when July 4 occurs on Sunday and July 5 is celebrated as the official holiday, between the hours of 12:00 noon and 11:00 p.m., or without an operational permit issued by the Fire Chief or his designee. Exceptions: 1.4G party favor devices, such as champagne bottles, poppers, snaps, and confetti pistols.

(b) The exceptions set out in subsection (a) of this section shall not be construed to permit the discharge, use or possession of bottle rockets. No person, at any time, shall set off, ignite, discharge or use, or possess for such purpose, bottle rockets **or Chinese lanterns** within the city or any of the city parks, except as provided in section 58-67. For the purposes of this section, bottle rockets shall be defined as any device that contains less than one-eighth ounce of chlorate of potash and sulphur with a total body weight of less than one-half ounce and with a body length of less than two inches, including any modifications to such device, with a launching stick attached to the body.

(c) Chinese lanterns shall be defined as any device constructed from oiled rice paper or lightweight paper on a bamboo or wire frame, and contains a small candle or fuel cell composed of a waxy flammable material or any other type of fuel cell where when lit, the flame heats the air inside the lantern, thus lowering its density and causing the lantern to rise into the air.

~~(c)~~ **(d)** The Fire Chief or his designee, in the interest of public safety, may issue an order prohibiting discharge of fireworks as described in this section within the city limits of Joplin or on property owned by the city. During the time set forth in such order, it shall be unlawful for any person to discharge fireworks in the area designated in the Fire Chief's order.

~~(d)~~ **(e)** *Exceptions.* Notwithstanding anything contained in this section to the contrary, it shall be permissible for items of fireworks as defined in RSMo 320.131 to be sold at wholesale or retail by holders of a jobber's permit to nonlicensed buyers from outside of the state at all times during the calendar year.

~~(e)~~ **(f)** *Sale of bottle rockets.* The provisions of this section shall not be construed to permit the sale, offer for sale or giveaway of bottle rockets. No person, at any time, shall sell, offer for sale or give away bottle rockets within the city limits or any of the city parks, except as provided in section 58-67

Sec. 58-67. - Public displays of fireworks.

Public displays of 1.3G and 1.4G fireworks shall be allowed for outdoor displays and proximate audience displays provided that the promoter desiring to put on such public display shall first receive an operational permit from the fire chief or his designee allowing such display and specifying the nature thereof and the time and the place in which it is to take place, submit copies of Missouri State shooters license, and submit copy of $1,000,000.00 surety bond or insurance. Public displays shall be under the supervision of the fire chief or his designee, and subject to provisions of the ~~2006~~ **2012** International Fire Code Section ~~3308~~ **5608** and applicable sections of Joplin City Ordinances. Displays shall have at least one fire department truck and appropriate personnel standing by on site for the duration of the display plus one hour for safety checks. Cost of fire department stand-by shall be at the promoter's expense.

Sec. 58-68. - Schedule of fees.

The following is a schedule of the fire department permit fees:

(1) *Plan review.* Where a fire plan review is required for any reason, fees shall be collected for such plan review as follows:

a. Fire commercial plan review fee shall be .00025 multiplied by the value of the project, with a maximum cap of $2,000.00 per plan review effective June 1, 2008. The fire plan review fee shall be .0005 multiplied by the value of the project, with a maximum cap of $2,500.00 per plan review effective June 1, 2009. The fire plan review fee shall be .00075 multiplied by the value of the project, with a maximum cap of $2,500.00 per plan review effective June 1, 2010.

1. The value of the project in this section shall be computed by one of the following methods and approved by the fire marshal.

a) Provided by the person applying for the permit and verified by the fire marshal.

b) Calculated using the building valuation data published in the Building Safety Journal each February issue (on file in the city clerk's office) based on square footage of the project, and modified for the City of Joplin, using a multiplier of 0.87.

b. Sprinkler/standpipe plan review fee shall be $200.00 for commercial permits and $50.00 for residential permits.

c. Alarm system plan review fee shall be $200.00 for commercial permits and $50.00 for residential permits.

(2) *Permit fees.* No permit will be issued prior to the plan review process or prior to the beginning of construction.

a. *Operational permit fees.* Operational permits, as referenced in the International Fire Code, shall be issued on a yearly basis and may be revoked by the fire marshal at any time for cause. Operational permits shall be $50.00 for the first permit and $25.00 for each additional permit, but not to exceed $500.00 each calendar year.

b. *Construction permit fees.* Construction permits, as referenced in the International Fire Code, shall be issued at the time of the construction, repair, replacement or extension of all listed systems, processes or occupancies as set out in the International Fire Code. These permits may be revoked by the fire marshal at any time for cause. Construction permits shall be $100.00 each.

(3) *Burn permit fees.*

a. *General burn permit fee.* A general burn permit shall be issued prior to any such burning inside the City of Joplin. A general burn permit for piles less than three feet diameter by two feet high shall cost $5.00. A burn permit shall be valid for up to three consecutive days. Prior to burning, a holder of a valid burn permit must contact the Joplin Fire Department to obtain permission to burn on that given day.

b. Burning relating to land clearing may be allowed at the discretion of the fire chief or his designee. The permit fee shall be fifty $50.00 per each three-day period and must be compliant with all conditions stated in Sec. 58-1 (2)

(4) *Reinspection fees.*

a. There will be a reinspection fee when extra inspections are necessary due to any of the following reasons:

1) When wrong address is provided.

2) When work is not ready for inspection when called.

3) When work is not installed in compliance with city ordinances and/or applicable codes.

4) In any other event that is of no fault of city inspectors.

For each trip, residential: $25.00, commercial/industrial: $50.00.

(5) *Firework stand fees.*

a. $50.00 per calendar year as referenced in section 58-66

(6) *Fee review process.* City council shall review the costs of services with all user fees at least on a bi-annual basis during the budget process to determine the appropriateness of the fees charge."

Section 3. This ordinance shall become effective on November 10, 2015.

PASSED BY THE COUNCIL OF THE CITY OF JOPLIN, MISSOURI, this _____ day of _____, 2015.

_____
Michael L. Seibert – Mayor

ATTEST:

_____
Barbara Hogelin – City Clerk

APPROVED AS TO FORM

_____
Peter C. Edwards, City Attorney

City of **JOPLIN** City Council Agenda Item

Requested Council Meeting Date: October 5, 2015

Item: COUNCIL BILL NO. 2015-364
Originating Department: BUILDING REGULATIONS

Attachments: Council Bill No. 2015-364

Building Regulations: Brian Wicklund
Planning and Community Development Manager: Troy Bolander
Finance Department: Leslie Haase
City Attorney: Peter C. Edwards
City Manager: Samuel L. Anselm
Fire Chief: James Furgerson

Recommended Action: Approval of the adoption of the 2012 International Fire Code.

Summary: The City of Joplin updates our Building Codes approximately every six (6) years. Our last update of the fire code took place in 2008, at which time the 2006 edition of the International Fire Code was adopted. At this time we are proposing to adopt the 2012 edition of the International Fire Code.

By keeping our building codes current we receive a higher rating for that particular item from the I.S.O, as well as staying current with new life safety standards. Today we use and enforce modern Building Codes that address structural, fire, electrical, and mechanical safety as well as health and security issues. Our job is to make sure homes, schools, businesses, and other structures are safe places to live, work, and play. We provide inspection of construction projects at several stages to ensure that happens. This Council Bill adopts the following Code:

1. **2012 International Fire Code**, with coordination with the International Building Code, references national standards to comprehensively address fire safety in new and existing buildings.

Recommendation: Staff recommends approval of this Council Bill.