JOPLIN CITY COUNCIL
REGULAR MEETING AGENDA
MONDAY, NOVEMBER 1, 2021
5th FLOOR COUNCIL CHAMBERS
602 S. MAIN ST. JOPLIN MO
6:00 P.M.

This meeting can be viewed live on KGCS-TV channel 21 and regional cable television systems including Sparklight in Joplin; or livestream at http://www.joplinmo.org/182/Video-Multimedia

Persons wishing to address the City Council regarding an item on the agenda should complete a Request to Address Council and give it to the City Clerk prior to the start of the meeting. When your name is called, approach the podium, and state your name clearly for the record. If your request pertains to a Public Hearing item, you do not need to submit a request. You will have five (5) minutes to speak.

PLEASE NOTE: No outside electronic devices are allowed to be used on City equipment without prior City approval. If you have handouts, you must provide 12 copies of the material to the City Clerk.

AGENDA

1. **Call To Order**
   Invocation
   Pledge of Allegiance of the United States of America
2. **Roll Call**
3. **Presentations**
4. **Finalization Of Consent Agenda**
5. **Reports And Communications**
   1. Downtown Joplin Alliance Update

      Documents:

      NOVEMBER 2021.PDF
   2. Health Department Update
   3. News From The Public Information Office
6. **Citizen Requests And Petitions**
   1. Abbie Covington Requested To Speak On Joplin Police & Fire
7. **Public Hearings**
   1. Public Hearing Procedures

      Documents:

      PUBLIC HEARING PROC.PDF
   2. RESOLUTION NO. 2021-017
      A RESOLUTION granting a Special Use Permit (1st Request) for the operation of a short-term rental located at 416 S. Florida Ave., in the City of Joplin, Jasper County, Missouri.

      Documents:

      RS 2021-017 MINUTES.PDF
      RS 2021-017 STAFF REPORT.PDF
      RS 2021-017 SUMMARY.PDF

RS 2021-017.PDF

3. COUNCIL BILL NO. 2021-287
AN ORDINANCE amending Ordinance No. 2004-256, passed by the Council of the City of Joplin, Missouri, November 15, 2004, by removing from District M-2 (Heavy Industrial) and including in District R-3 (Apartment House) property as described below and located at approximately 550 feet South of the intersection of S. Rex Ave and E. 13th Street, in the City of Joplin, Jasper County, Missouri.

Documents:

CB 2021-287 MINUTES.PDF
CB 2021-287 STAFF REPORT.PDF
CB 2021-287 SUMMARY.PDF
CB 2021-287.PDF

4. COUNCIL BILL NO. 2021-288
AN ORDINANCE amending Ordinance No. 2004-256, passed by the Council of the City of Joplin, Missouri, November 15, 2004, by removing from District R-2 (Two- Family Residential) and including in District R-3 (Apartment House) property as described below and located at 3431 E 10th Street, City of Joplin, Jasper County, Missouri.

Documents:

CB 2021-288.PDF
CB 2021-288 SUMMARY.PDF
CB 2021-288 STAFF REPORT.PDF
CB 2021-288 MINUTES.PDF

5. COUNCIL BILL NO. 2021-289
AN ORDINANCE amending Ordinance No. 2004-256, passed by the Council of the City of Joplin, Missouri, November 15, 2004, by removing from District C-O (Non-retail Commercial) and including in District C-3 (Commercial) property as described below and located at approximately 175 feet of the intersection of S. Connecticut Ave and E. 24th Street.

Documents:

CB 2021-289 MINUTES.PDF
CB 2021-289 STAFF REPORT.PDF
CB 2021-289 SUMMARY.PDF
CB 2021-289.PDF

6. COUNCIL BILL NO. 2021-290
AN ORDINANCE providing to vacate approximately 700 feet East of the intersection of E. 9th Street and S. Rex Ave., City of Joplin, Jasper County, Missouri.

Documents:

CB 2021-290 MINUTES.PDF
CB 2021-290 STAFF REPORT.PDF
CB 2021-290 SUMMARY.PDF
CB 2021-290.PDF

8. **Consent Agenda**

1. Minutes Of The October 18, 2021 City Council Meeting

Documents:

MINS. OCT. 18 2021.PDF

2. Minutes Of The October 26, 2021 Special City Council Meeting

Documents:

SP. MTG.OCT. 26._.PDF

3. COUNCIL BILL NO. 2021-003
AN ORDINANCE amending Chapter 114, "Traffic," by enacting a new Article XII, "Utility Vehicles."

Documents:

CB2021-003.PDF

4. COUNCIL BILL NO. 2021-406
AN ORDINANCE approving an Agreement between the City of Joplin, Missouri, and Owen & Eastlake Ltd.; authorizing the City Manager or his designee, Director of Planning, Development and Neighborhood Services, to execute same on behalf of the City.

Documents:

CB2021-406.PDF

9. Resolutions

1. RESOLUTION NO. 2021-018
A RESOLUTION authorizing the City of Joplin to enter into Memorandum of Understanding with the National Institute of Standards (NIST) Engineering Laboratory and the Center for Risk-Based Community Resilience Planning (CoE) to collaborate on the development and validation of a Community Resilience Planning Guide for buildings and infrastructure and for the development and validation of the Interdependent Networked Community Resilience Modeling Environment (IN-CORE) software program to help communities optimize community resilience planning and post disaster recovery.

Documents:

RS 2021-018 MOU.PDF
RS 2021-018 SUMMARY.PDF
RS 2021-018.PDF

10. Ordinances - Emergency

1. COUNCIL BILL NO. 2021-525
AN ORDINANCE approving a Contract by and between the City of Joplin and Symetra to provide stop loss coverage for the City's health self-insurance coverage on behalf of the employer, the City of Joplin; authorizing the City Manager to execute said Contract by and on behalf of the City of Joplin; and containing an emergency clause.

Documents:

CB 2021-525 SUMMARY HEALTH INSURANCE STOP LOSS CONTRACT.PDF
CB 2021-525 ORDINANCE HEALTH INSURANCE STOP LOSS CONTRACT AGREEMENT.PDF
CB 2021-525 EXHIBIT A SYMETRA STOP LOSS AGREEMENT.PDF

2. COUNCIL BILL NO. 2021-528
AN ORDINANCE adopting and establishing pay rates for certain Unclassified Council Employees; and,

containing an emergency clause.

Documents:

CB 2021-528 SUMMARY COUNCIL EMPLOYEE RAISES.PDF
CB 2021-528 COUNCIL EMPLOYEES PAY ADOPTION ORDINANCE.PDF
CB 2021-528 EXHIBIT A COUNCIL EMPLOYEE PAY EXHIBIT FY 2022.PDF

3. COUNCIL BILL NO. 2021-610
AN ORDINANCE approving a Purchase Order to be issued to Superion to cover the annual support payment for the Public Safety and Financial software and related systems as budgeted in the Annual Budget of the City of Joplin for the Fiscal Year 2021-2022 as adopted by Council Bill 2021-523 on October 18, 2021; and containing an emergency clause.

Documents:

2021-610 SUMMARY SHEET.PDF
CB2021-610 COJ SUPERION LLC AGREEMENT FOR IT SERVICES.PDF
SUPERION_OSSI_2022.PDF
SUPERION_PA_2022.PDF

4. COUNCIL BILL NO. 2021-611
AN ORDINANCE authorizing the City of Joplin to enter into an agreement with MacQueen Equipment LLC; DBA MacQueen Emergency Group., a Missouri Corporation, for the purpose of purchasing one (1) new Pierce Enforcer Aerial 107′ Ascendant with rear-mount aerial for the not to exceed price of One Million One Hundred Twenty-Four Thousand Dollars and No Cents ($1,124,000.00); authorizing the City Manager or his designee to execute the same by and on behalf of the City of Joplin; amending the Annual Budget of the City of Joplin for the Fiscal Year 2021-2022 as adopted by Ordinance 2021-150 on October 18, 2021; and, containing an emergency clause.

Documents:

SUMMARY SHEET CB 2021-611 QUINT REPLACEMENT V3.PDF
COUNCIL BILL 2021-611 QUINT REPLACEMENT NOV 1.PDF
MACQUEEN PROPOSAL PIERCE 107 ASCENDANT 2021.PDF
2021 PIERCE EFORCER ASCENDANT 107 FT AERIAL OPTION LIST.PDF
WARRANTIES.PDF
CERTIFICATIONS.PDF
BLUE PRINT.PDF
CB2-21-611.PHOTOS.PDF

11. Ordinances - First Reading

1. COUNCIL BILL NO. 2021-166
AN ORDINANCE approving an agreement and work authorization with Burns and McDonnell in the not to exceed amount of Ninety-Six Thousand Four Hundred Fifty and 00/100 Dollars ($96,450.00) for professional engineering consulting services for preparing the City of Joplin's Solid Waste Masterplan; authorizing the City Manager or his designee to execute the same by and on behalf of the City of Joplin; amending the Annual Budget of the City of Joplin for the Fiscal Year 2021-2022 as adopted by Ordinance 2021-149 on October 18, 2021.

Documents:

BURNS AND MCD.PDF
BURNS AND MCDONNEL WA.PDF
CB 2021-166 SUMMARY SHEET.PDF
CB 2021 -166 SOLID WASTE MASTER PLAN.PDF
FINAL JOPLIN BUDGET LETTER - SWMP ENERGY EVALUATIONBH.PDF
SWMP CONTRACTOR SELECTION REPORT.PDF

12. Ordinances - Second Reading And Third Reading

13. Unfinished Business

14. New Business

1. Vote To Go Into Closed Session, Which Shall Pertain To Leasing, Purchasing Or Sale Of Real Estate By A Public Governmental Body Where Public Knowledge Of The Transaction Might Adversely Affect The Legal Consideration Therefore; And Which Shall Pertain To The Hiring, Firing, Disciplining, Or Promotion Of An Employee Or Particular Employees Of A Governmental Body Involving Personal Information; As Set Forth In Section 610.021(2) (3) RSMo, As Amended, 2020. This Meeting, Record, And Vote To Be Closed To The Extent Provided By Law. The City Council Shall Adjourn At The End Of The Session.

Update

Downtown Joplin Alliance



EMPIRE MARKET

The Empire Market continues to grow. Held every Saturday year-round, we love watching our vendors grow their businesses. It's particularly exciting when one of them makes the move to a downtown storefront, which we are seeing right now with Coley's Cookies which is opening in November at 905 S Main. We also have a Workspace tenant who has purchased a building just off Main on 15th street and will be moving his operations there.

The Market building itself has seen some improvements in past months. A long needed new roof was just completed. Two new HVAC units were installed in the second floor workspace and ground floor classroom. The ditch work to the east of the building is recently completed by city contractors and we are in the process of planting it with natives and pollinator plants.

Our community gardens have had a successful season and still have produce, flowers, and recently...zombie scarecrows for Halloween. Plans are in the works for adding an apiary in 2022. Along with the gardens themselves adding color and vibrancy to the facility, we've added several new art features on the building and fences.

The Market just received notification of a $45,000 grant award from the Dept of Agriculture to go towards adding a commercial kitchen to the facility. A commercial kitchen will add potential for vendors to create "value-added" products from their fresh products. It also increases the possibilites for ready to eat foods at the market, especially for our Kids Meal program. We are in the process of seeking additional funds to make the kitchen a reality.

NOVEMBER 2021

Events Overview

Third Thursday-7 events

Clean Team-16 events with 160+ hours

Arts Fest

Bicentennial Ice Cream Social

Cauldrons and Cocktails Night Market

Annual Sidewalk Sale

MSSU Homecoming Parade

Mimosa Crawl

OVER 700 VOLUNTEER HOURS WERE REPORTED IN Q3!

DOWNTOWN JOPLIN ALLIANCE



SMALL BUSINESS

We continue to work with our small downtown businesses in a variety of ways. We introduced a "New Business Welcome" where we visit locations new to downtown and live stream it to social media. On our weekly Walkabout Wednesday, we visit areas throughout the district. These visits are always a good way to hear about needs of businesses or questions they might have. We've also hosted two Business to Business networking sessions and host and manage a Facebook group specifically for downtown businesses.

We are looking forward to new businesses on the 900 block including The Florist and the Merchant, Coley's Cookies, and Creative Learning Alliance.

ENDANGERED PROPERTIES PROGRAM

Our Endangered Properties Program has been working on connecting with property owners for buildings which are vacant and/or underutilized as well as building a robust database with building and owner information. In addition, we work on a daily basis with prospective developers and businesses to locate a property that fits their needs as well as help with technical aspects of historic tax credits, rehabilitation, city requirements, downtown market, arranging tours and many other issues.

Some key buildings with recent progress:

- Union Depot-named to Missouri Preservation Places in Peril and marketing video created.
- Creamery Building, 614 Kentucky, is currently under contract.
- Masonic Lodge, 102 S Wall, has new owner.
- Conversations are happening with owner of Carnegie Library.

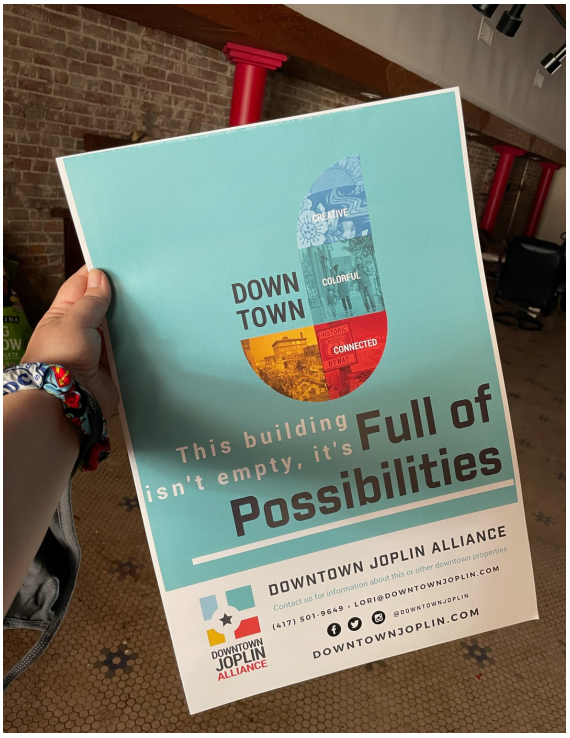

A GROWING ORGANIZATION

Our organization is growing. We added a new position in late summer for a Programming and Marketing Director. Ivy Hagedorn moved into that position and Lindsay Gagnon was hired as Market Director. Since some of the main roles of our organization is to promote and market Downtown and its businesses and to bring people to the district, we are excited to have dedicated staff in this position. This goes hand in had with the new branding established in 2020 as well.

Our board added 4 new board members which takes us to our maximum 13 member board. Cynthia Olmstead, Shawn Hull, Luke Gibson and Jaron Scott have all been great additions. We have a couple of folks timing off at the end of the year, so this growth comes at just the right time.

We are also working within a grant we received from Missouri Main Street for some organizational capacity growth. With this grant, we will be rebuilding our website and refining organizational policies and procedures.

PUBLIC HEARING PROCEDURES

Persons wishing to testify before the City Council are requested to follow these rules:

1. Proponents of the issue will be asked to present their information, then the opponents will be asked to testify and then rebuttal testimony may be allowed by the Council.

2. Approach the podium and state your name clearly for the record.

3. Please give your testimony as briefly and completely as possible. By the rules of the City Council you have five (5) minutes within which to give your testimony. Please follow the clock on the dais in front of you. You must complete your testimony within the 5-minute time limit.

4. Please do not repeat testimony that has been given previously. We want you to state your facts but limit your information to only new information.

5. Everyone is invited to speak, however, if you have a spokesperson please allow them to speak without interrupting for applause or other demonstrations.

6. When the Public Hearing is closed by the Mayor, no additional testimony is allowed except when invited by the Mayor or other members of the Council.

7. Remember that this is a Public Hearing and all sides have a right to give testimony. Please respect their right to do so.

8. The City Council of the City of Joplin through this introduction, accepts into evidence the 2012 Comprehensive Plan, the Zoning Code of the City of Joplin, the Subdivision Regulations of the City of Joplin, the Telecommunications Ordinance, and the Stormwater Management Regulations of the City of Joplin being Appendices 29-A, 29-B, 29-D, 29-E and 29-F of the Joplin Municipal Code. Report of the Planning and Zoning Commission, recommendations of the City's staff, and other written documentation presented as that information applies to each public hearing.

Thank you for your consideration and understanding.

RS 2021-017

Case 053-21: 416 S. Florida Ave. - A request for a Special Use Permit (1st Request) for the operation of a short-term rental – Lane Clevenger.

Keegan Stanton, 602 S. Main Street, Joplin, MO representing the applicant. This property is by 4th Street and Florida. They are wanting to run this as an Air B&B or short-term rental. He did state on his application that the occupants would be the Executive rentals, 30 to 90 days for business people that are in town. We did place some conditions in the request.

1. This Special Use Permit is issued to Lane Clevenger for the operation of a short-term rental at 416 S. Florida Ave.
2. The permit shall be valid for 1 year upon approval, being eligible for renewal in November 2022.
3. Off street parking for at least two (2) vehicles shall be provided.
4. Occupancy shall be limited to 4 persons total or other limit as set by the City Council.
5. The property owner shall ensure the following information is conspicuously posted within the short-term rental:
    a. Special Use Permit Determination Form.
    b. City of Joplin Noise Ordinance.
    c. Contact info for person(s) responsible for day-to-day operation of the short-term rental.
    d. Trash collection schedule.
    e. That the short-term rental may not be rented solely for weddings, receptions, parties, or other similar event.
6. The compliance with all provisions of the Fire/Safety codes as required by the State Fire Marshal is required.
7. All regulations as stated in Appendix 29-A (Zoning Code) of the Joplin Municipal Code shall be followed at all times.
8. Any other conditions set by the City Council of the City of Joplin.

Mr. Eastman wanted to know if there was an occupancy condition. Mr. Stanton stated it is in the conditions and it is 4 persons each night.

Ms. Phillips stated that on one page it asks, "should this special use for a specific time period?" and it states no, but on page three it says for 1 year.

Mr. Stanton stated that is correct. The applicant is requesting basically a permanent special use permit. We placed the one-year approval specifically because we are working on writing a new ordinance for short-term rentals.

Mr. McCullough asked if they pay city tax or any kind of taxes?

Mr. Stanton stated they do not. It has come up in City Council and any taxation will have to come from them.

Mr. Eastman asked the Commissioners if they had any other questions? They did not. Mr. Eastman asked if there was anyone to speak in favor or against of this case? There was not.

MR. KIMBLE MOVED, SECONDED BY MR. MCCULLOUGH THAT CASE 053-21 BE FORWARDED TO THE CITY COUNCIL WITH THE RECOMMENDATION FOR APPROVAL. MOTION CARRIED, WITH MS. STEELE, MR. EASTMAN, MR. MCCULLOUGH, MR. KIMBLE, MS. PHILLIPS, AND MS. WARREN "AYE", (6 IN FAVOR, 1 ABSENT)

Z&P Meeting: October 11, 2021
City Council Meeting: November 1, 2021

STAFF PLANNING REPORT
Special Use Permit

CASE 053-21 A request for a Special Use Permit for the operation of a short-term rental.

LOCATION 416 S. Florida Ave.

APPLICANT Lane Clevenger

EXISTING CONDITIONS

Zoning	Land Use	Property Size
R-1	Single-family Home	Approximately 0.13 Acres

SITE CONTEXT

	North	East	South	West
Existing Zoning	R-1	C-1	R-1	R-1
Land Use	Single-family Residential	Multi-family Residential	Single-family Residential	Single-family Residential

TRANSPORTATION

Streets with access	Classification	Right-of-way width
S. Florida Ave.	Collector	50'

WILL TURNING MOVEMENTS OF THE PROPOSED USE CREATE AN UNDUE TRAFFIC HAZARD?

No.

UTILITIES Utilities do not need to be extended to the property.

FLOOD PLAIN N/A

STAFF ANALYSIS

IS DEEMED NECESSARY FOR THE PUBLIC CONVENIENCE AT THAT LOCATION.

Short-term rentals are generally offered in residential areas as an alternative form of short-term stay compared to typical hotels and motels. Its location within a residential area is consistent with the majority of short-term rentals found across the country. This property is also located on a collector level street giving potential occupants quick access to various parts of Joplin.

IS SO DESIGNED, LOCATED, AND PROPOSED TO BE OPERATED THAT THE PUBLIC HEALTH, SAFETY, AND WELFARE WILL BE PROTECTED.

The residential character of the structure and property will remain unaltered with this proposed use. Conditions set forth below limit the number of individuals that may occupy the rental at any one time based on the number of bedrooms, further securing the residential nature.

IS FOUND TO BE GENERALLY COMPATIBLE WITH THE NEIGHBORHOOD IN WHICH IT IS PROPOSED.

This short-term rental has been in operation prior to the application for this special use permit. It has operated without complaint. Conditions set forth below will secure the compatibility of the use within the neighborhood.

WILL COMPLY WITH THE HEIGHT AND AREA REGULATIONS OF THE DISTRICT IN WHICH IT IS LOCATED UNLESS SPECIFICALLY GRANTED.

The existing building is in compliance with height and area regulations as specified in the R-1 zoning district. No additional structure, or addition to the existing structure, is planned.

OFF-STREET PARKING AND LOADING AREAS WILL BE PROVIDED IN ACCORDANCE WITH THE STANDARDS SET FORTH IN THE ZONING REGULATIONS AND SUCH AREAS WILL BE SCREENED FROM ADJOINING RESIDENTIAL USES AND LOCATED SO AS TO PROTECT SUCH RESIDENTIAL USE FROM ANY INJUIOUS EFFECT.

Approximately 2 vehicles would be able to park off-street off of the alley. No parking is available in the front of the property off-street.

ADEQUATE UTILITY, DRAINAGE, AND OTHER SUCH NECESSARY FACILITIES HAVE BEEN OR WILL BE PROVIDED.

Utilities are presently in place. Drainage is handled via curb and gutter running parallel to the street. No alterations to the site are planned that would increase impervious area or stormwater runoff.

DISCUSSION

The applicant is requesting a Special Use Permit for the first time with this application for the operation of short-term rental, colloquially referred to as an Airbnb. The facility provides up to 2 off-street parking spaces and employs 0 assistants or employees other than the homeowner.

The applicant has expressed that the rental will be geared toward executive rentals who tend to lease for longer terms than is typical with short-term rentals. However, the property will still be available for shorter stays. The applicant has also mentioned that due to the size of the property, there will be a self-imposed limit of 4 guests.

As of 6 October 2021, staff has received no complaints regarding this property.

CONDITIONS

1. This Special Use Permit is issued to Lane Clevenger for the operation of a short-term rental at 416 S. Florida Ave.
2. The permit shall be valid for 1 year upon approval, being eligible for renewal in November 2022.
3. Off street parking for at least two (2) vehicles shall be provided.
4. Occupancy shall be limited to 4 persons total or other limit as set by the City Council.
5. The property owner shall ensure the following information is conspicuously posted within the short-term rental:
    a. Special Use Permit Determination Form.
    b. City of Joplin Noise Ordinance.
    c. Contact info for person(s) responsible for day-to-day operation of the short-term rental.
    d. Trash collection schedule.
    e. That the short-term rental may not be rented solely for weddings, receptions, parties, or other similar event.
6. The compliance with all provisions of the Fire/Safety codes as required by the State Fire Marshal is required.
7. All regulations as stated in Appendix 29-A (Zoning Code) of the Joplin Municipal Code shall be followed at all times.
8. Any other conditions set by the City Council of the City of Joplin.

RECEIVED 8-19-21

SPECIAL USE PERMIT APPLICATION

Return Form to:
Planning / Community Development Specialist.
Joplin City Hall
602 South Main Street
Joplin, Missouri 64801
417-624-0820 Ext. 511
FAX 417-625-4738

For Office Use Only

Case No.: 053-21
Filing Fee: ~~$500.00~~ 550.00
Date Advertised:
Date Notices Sent 10-4-21
Public Hearing Date: 10-11-21

APPLICANT: Lane Clevenger PHONE: 417-396-1334

ADDRESS: 2920 S Main St. EMAIL: laneclevenger@gmail.com

OWNER: LITHA Holdings LLC PHONE: 417-396-1334

ADDRESS: 416 Florida EMAIL: laneclevenger@gmail.com

LOCATION OF PROPERTY: 416 Florida

LEGAL DESCRIPTION: All of lot four (4) in Morningside sub-division in the City of Joplin, Jasper County, Missouri, According to the recorded plat thereof. A.P.N. 19-1.0-01-30-032-012.000

PRESENT ZONING CLASSIFICATION: R1 ACREAGE: 0.1297

PRESENT USE OF PROPERTY: Short Term Rental Property

PROPOSED LAND USE ACTIVITY: N/A

ADJACENT ZONING AND LAND USE:

	Land Use	Zoning
North	Residence	R1
South	Residence	R1
East	Apartments	R3 - C1
West	Residence	R1

Does the proposed special use meet the following standards? If yes, attach a separate sheet explaining why.

	YES	NO
1. Is deemed necessary for the public convenience at that location.	✓	

2. Is so designed, located, and proposed to be operated that the public health, safety, and welfare will be protected. ✓ ____

3. Is found to be generally compatible with the neighborhood in which it is proposed. ✓ ____

4. Will comply with the height and area regulations of the district in which it is located unless specifically granted. ✓ ____

5. Off-street parking and loading areas will be provided in accordance with the standards set forth in the zoning regulations and such areas will be screened from adjoining residential uses and located so as to protect such residential use from any injurious effect. ✓ ____

6. Adequate utility, drainage, and other such necessary facilities have been or will be provided. ✓ ____

Should this special use be valid only for a specific time period? Yes _____ No ✓
If Yes, what length of time? _____

Attachments Required:
1. One copy of a legal description of the property on which the use is to be located.
2. One copy of the necessary descriptive material related to the intensity and extent of the proposed use, including any traffic conditions that may result; any danger from fire hazards; how the proposed use may impact the character of the surrounding properties; and how the proposed use will benefit the City of Joplin.
3. Site plans and landscape plans must be submitted for the site before a Special Use Permit can be advertised for public hearing.

The Special Use Permit that will be issued will have set of conditions that will require information regarding the following: (Additional conditions may be imposed by the Commission and Council)

1. Hours of Operation. Residence
2. Days of Operation. All
3. Number of Off-street Parking Spaces. 2
4. Signs (Generally signs are limited to one sign not larger that one (1) foot by two (2) feet set no more than six (6) feet off the ground and at least ten (10) feet inside the property line.) NO Signage
5. Number of Assistants or employees. 1
6. Nature of the Business. Short term Rental
7. Location of the Business. 416 Florida

Violation of any condition will cause a complaint to be filed with the Municipal Court and the Permit will be suspended immediately requiring reapplication.

SIGNATURE: [signature] - LITHA Holdings DATE: 8/19/21

BY: Lane Clevenger - Managing Member TITLE: Member

Case 053-21: 416 S. Florida Ave. - Rezoning

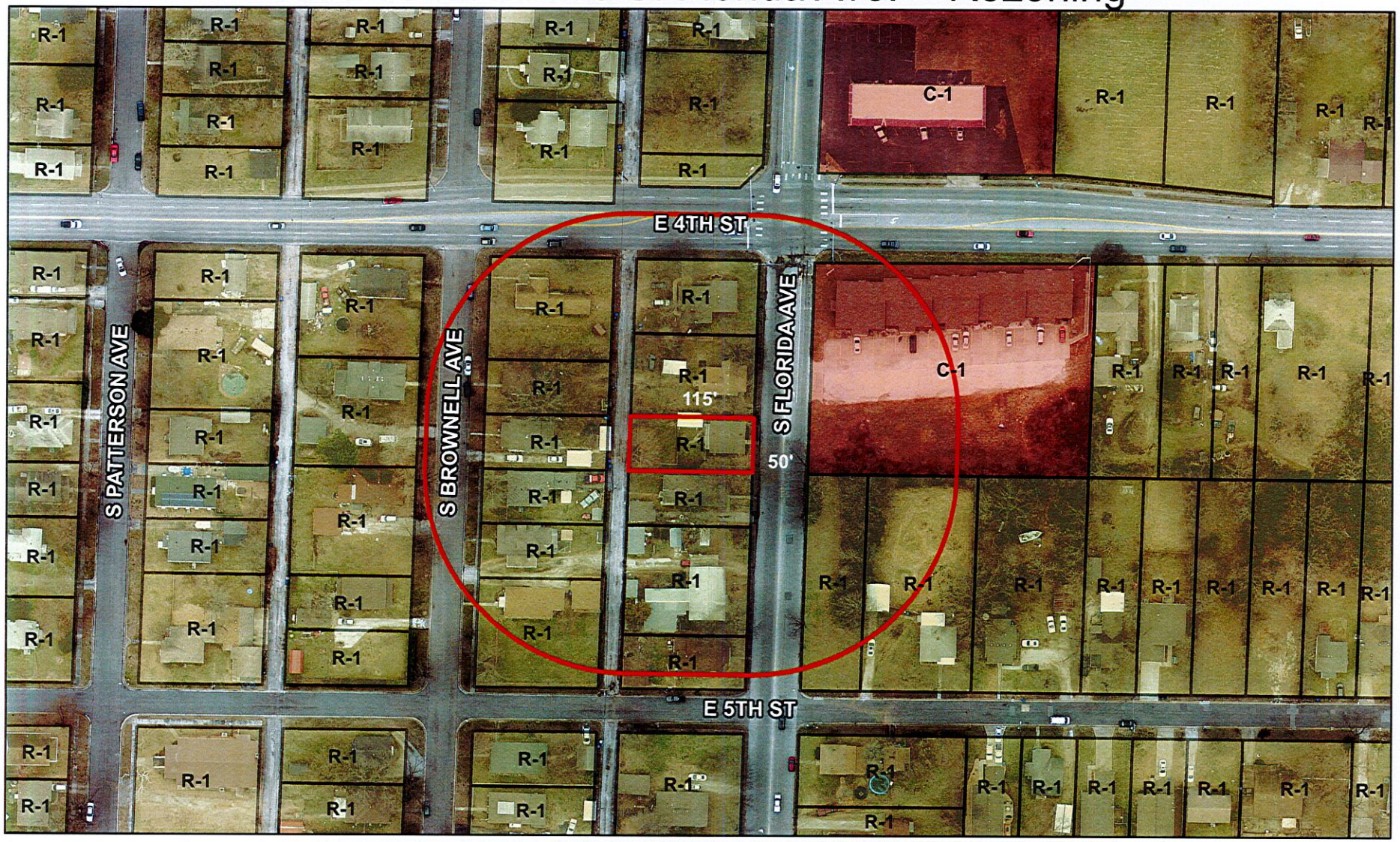

Case 053-21: 416 S. Florida Ave. - A request for a Special Use Permit (1st Request) for the operation of a short-term rental – Lane Clevenger

N

0 50 100 200 300 400 Feet

CITY OF JOPLIN
COUNCIL AGENDA ITEM

ITEM:
Resolution No. 2021-017 – Special Use Permit (1st Request)

MEETING DATE:
November 1, 2021

ORIGINATING DEPARTMENT:
Planning, Development and Neighborhood Services

REVIEWED BY:
Director of Planning, Development & Neighborhood Services-Troy Bolander, Director of Finance-Leslie Haase, City Attorney- Peter Edwards, City Manager Nicholas Edwards.

SUMMARY REQUEST:
Case 053-21: 416 S. Florida Ave. - A request for a Special Use Permit (1st Request) for the operation of a short-term rental – Lane Clevenger

BACKGROUND:
Short-term rentals are generally offered in residential areas as an alternative form of short-term stay compared to typical hotels and motels. Its location within a residential area is consistent with the majority of short-term rentals found across the country. This property is also located on a collector level street giving potential occupants quick access to various parts of Joplin.
The residential character of the structure and property will remain unaltered with this proposed use. Conditions set forth below limit the number of individuals that may occupy the rental at any one time based on the number of bedrooms, further securing the residential nature.

This short-term rental has been in operation prior to the application for this special use permit. It has operated without complaint. Conditions set forth below will secure the compatibility of the use within the neighborhood.

The facility provides up to 2 off-street parking spaces and employs 0 assistants or employees other than the homeowner.

The applicant has expressed that the rental will be geared toward executive rentals who tend to lease for longer terms than is typical with short-term rentals. However, the property will still be available for shorter stays. The applicant has also mentioned that due to the size of the property, there will be a self-imposed limit of 4 guests.

PLANNING & ZONING COMMISSION TESTIMONY:
Keegan Stanton, 602 S. Main Street, Joplin, MO representing the applicant. This property is by 4th Street and Florida. They are wanting to run this as an Air B&B or short-term rental. He did state on his application that the occupants would be the Executive rentals, 30 to 90 days for business people that are in town. We did place some conditions in the request.

PUBLIC COMMENT; None

FUNDING SOURCE:
These payments are included in the FY 2020-21 budget of the Community Planning Fund.

RECOMMENDATIONS:
Planning & Zoning Commission recommends Approval (6 Favor, 1 Absent)

ATTACHMENTS
RS 2021-017, Staff Planning Report, P&Z Commission Minutes.

P & Z Case 053-21
Lane Clevenger
(P & Z Recommended for Approval)

RESOLUTION NO. 2021-017.

A RESOLUTION granting a Special Use Permit (1st Request) for the operation of a short-term rental located at 416 S. Florida Ave., in the City of Joplin, Jasper County, Missouri.

WHEREAS, A public hearing was held before the City Council on October 11, 2021, in compliance with said request.

NOW, THEREFORE, BE IT RESOLVED by the City Council of the City of Joplin, as follows:

That a Special Use Permit be granted to Lane Clevenger for the operation of a short-term rental located in the City of Joplin, Missouri, on the following described real estate, to-wit:

> All of lot numbered four (4) in Morningside Sub-division in the City of Joplin, Jasper County, Missouri, according to the recorded plat thereof.

And the said Sprical Use Permit is hereby issued with the following conditions and made a part thereof:

1. . This Special Use Permit is issued to Lane Clevenger for the operation of a short-term rental at 416 S. Florida Ave.
2. The permit shall be valid for 1 year upon approval, being eligible for renewal in November 2022.
3. Off street parking for at least two (2) vehicles shall be provided.
4. Occupancy shall be limited to 4 persons total or other limit as set by the City Council.
5. The property owner shall ensure the following information is conspicuously posted within the short-term rental:
    a. Special Use Permit Determination Form.
    b. City of Joplin Noise Ordinance.
    c. Contact info for person(s) responsible for day-to-day operation of the short-term rental.
    d. Trash collection schedule.
    e. That the short-term rental may not be rented solely for weddings, receptions, parties, or other similar event.
6. The compliance with all provisions of the Fire/Safety codes as required by the State Fire Marshal is required.
7. All regulations as stated in Appendix 29-A (Zoning Code) of the Joplin Municipal Code shall be followed at all times.
8. Any other conditions set by the City Council of the City of Joplin.

The violation of any condition set forth in this Resolution shall be interpreted as a violation of Appendix 29-A (Zoning Code) of the Municipal Codes of the City of Joplin and shall be

administered in accordance with the provisions of Section 34 (Violation and Penalty) of Appendix 29-A of that Code. Conviction in Municipal Court for violation of any condition as set forth in this Resolution shall cause the immediate termination of this Special Use Permit and require the applicant as named in Item No. 1 above to reapply for renewal.

That the City Clerk is hereby ordered to file this Resolution with the Zoning District Map maintained in her office and to note the changes herein provided thereon.

PASSED BY THE COUNCIL OF THE CITY OF JOPLIN, MISSOURI, this the _____ day of _____, 2021, by a vote of _____.

_____
Ryan D. Stanley, Mayor

ATTEST:

_____
Barbara J. Gollhofer, City Clerk

APPROVED AS TO FORM:

_____
Peter C. Edwards, City Attorney

CB 2021-287

Case 054-21: Approximately 550 feet South of the intersection of S. Rex Ave. and E. 13th St. – A request to remove from District M-2 (Heavy Industrial) and include in District R-3 (Apartment House) for future residential development – Hung Nguyen.

Hung Nguyen, 3411 E 11th Street, Joplin, MO. We own a piece of property behind 15th Street Wal-Mart by the water tower. We were wanting to build some duplexes. Right now, just rezone the property. We will start building next year.

Mr. Eastman asked the Commissioners if they had any other questions? They did not. Mr. Eastman asked if there was anyone to speak in favor or against of this case? There was not.

MR. KIMBLE MOVED, SECONDED BY MR. MCCULLOUGH THAT CASE 054-21 BE FORWARDED TO THE CITY COUNCIL WITH THE RECOMMENDATION FOR APPROVAL. MOTION CARRIED, WITH MS. STEELE, MR. EASTMAN, MR. MCCULLOUGH, MR. KIMBLE, MS. PHILLIPS, AND MS. WARREN "AYE", (6 IN FAVOR, 1 ABSENT)

Z&P Meeting: October 11, 2021
City Council Meeting: November 1, 2021

STAFF PLANNING REPORT
Rezoning

CASE 054-21 A request to remove from District M-2 (Heavy Industrial) and include in District R-3 (Apartment House) for future residential development.

LOCATION Approximately 550 feet South of the intersection of S. Rex Ave. and E. 13th St.

APPLICANT Hung Nguyen

EXISTING CONDITIONS

Zoning	Land Use	Property Size
M-2	Vacant	Approx. 2 acres

SITE CONTEXT

	North	East	South	West
Existing Zoning	Out of City Limits	M-1	M-2	C-3
Land Use	Single-family Residential	Single-family Residential	Retail/Water Tower	Retail

FUTURE LAND USE

Joplin's Future Land Use Map shows this property as future Retail Commercial.

TRANSPORTATION

Streets with access	Classification	Right-of-way width
S. Rex Ave.	Local	35'

UTILITIES

Utilities in place.

FLOOD PLAIN

This property is not in a flood plain.

STAFF ANALYSIS

CONSISTENT WITH DEVELOPMENT POLICIES OF THE COMPREHENSIVE PLAN?

This request is consistent with the Comprehensive Plan. The future land use map does indicate future Retail Commercial. However, this request is consistent with the infill development goals in that plan. It is also consistent with nearby property along the Rex Ave. corridor.

THE SUITABILITY OF THE SUBJECT PROPERTY FOR THE USES TO WHICH IT HAS BEEN RESTRICTED

The current zoning of M-2 is unsuitable at this property. This portion of Joplin has almost completely transitioned from industrial uses to commercial and residential. The property is also ill-shaped to host most industrial uses today.

THE EXTENT THAT THE ZONING CHANGE WILL DETRIMENTALLY AFFECT NEARBY PROPERTY

The change in zoning will not be detrimental to nearby property. The uses permitted in R-3 are significantly less intense than those permitted in the current M-2 district. Furthermore, the majority of uses within the Joplin city limits along Rex Ave. are high-density residential or commercial.

DISCUSSION

This request to rezone to R-3 is for future duplex or multi-family development on the site. No buffer is required in this case. Stormwater management would be required with any development due to the size. Proper fire access will also be required, and an extension of fire hydrants may be required per the fire marshal.

The request is found to be consistent with the comprehensive plan and future land use map.

Staff recommends approval of Case 054-21.

ATTACHMENTS

- Application
- Map

REZONING APPLICATION FORM

Return Form to:
Planning / Community Development Specialist.
Joplin City Hall
602 South Main Street
Joplin, Missouri 64801
417-624-0820 Ext. 511
FAX 417-625-4738

For Office Use Only
Case No.: 054-21
Filing Fee: ~~$500.00~~ $50.00
Date Advertised:
Date Notices Sent: 10-4-21
P&Z Date: 10-11-21
City Council Date: 11-1-21

APPLICANT: Hung Nguyen PHONE: (417) 529-0384 & Lam
ADDRESS: 3411 E. 11th St. Joplin MO ZIP: 64801
EMAIL: N/A
OWNER: Hung Nguyen PHONE (417) 529-0384
ADDRESS: 3411 E 11th St Joplin MO ZIP: 64801 & Kha & 417-434-3725
EMAIL: N/A
LOCATION OF PROPERTY: 15th St Joplin
LEGAL DESCRIPTION: Land located right behind Wal-Mart on 15th St. Missouri Water Tower is located right next to this property

Present Zoning: No current Requested Zoning: Commercial Acreage: 3 acres
Present Use of Property: Vacant Lot
Proposed Use of Property: Building a 12 unit Complex Building

SURROUNDING LAND USE AND ZONING:

	Land Use	Zoning
North		
South	~~Non commercial~~	~~Commercial~~
East		
West		

CHARACTER OF THE NEIGHBORHOOD: Neighborhood is surrounded by a few Houses and Missouri Water Tower is right next to it also.

RELATIONSHIP TO EXISTING ZONING PATTERN:

1. Would proposed change create a small, isolated district unrelated to surrounding districts? NO
2. Are there substantial reasons why the property cannot be used in accord with existing zoning? NO
   If yes, explain:

CONFORMANCE WITH COMPREHENSIVE PLAN:

1. Consistent with Development Policies? NO
2. Consistent with Future Land Use Map? NO

THE FOLLOWING MUST ACCOMPANY YOUR APPLICATION:

1. One copy of a legal description of the property proposed to be rezoned.
2. One copy of a statement describing the reasoning for the rezoning, the impact of the proposed change, including any traffic conditions that may result; any danger from fire hazards; how the proposed change may effect the character of the surrounding properties; and how the proposed change will benefit the City of Joplin.

X Owner Affidavit, if applicant applying for the rezoning is not the owner of the property be rezoned

X For Planned Developments the following must be submitted and reviewed before the rezoning can be advertised for public hearing:

___ Site Plan ___ Landscape Plan ___ Building Elevations

TRAFFIC CONDITIONS:

1. Street(s) with Access to Property: 15th St Rangeline Road
2. Classification of Street(s):
   Arterial_____ Collector_____ Local Joplin
3. Right-of-Way Width: _____
4. Will turning movements caused by the proposed use create an undue traffic hazard?
   NO

IS PLATTING OR REPLATTING REQUIRED TO PROVIDE FOR:

1. Appropriately Sized Lots?_____
2. Properly Sized Street Right-of-Way?_____
3. Drainage Easements?_____
4. Utility Easements:
   - Electricity?_____
   - Gas?_____
   - Sewers?_____
   - Water?_____
5. Additional Comments:_____

UNIQUE CHARACTERISTIC OF PROPERTY AND ADDITIONAL COMMENT:

SIGNATURE: X Hany Nagy DATE: 8-24-21

BY: _____

TITLE: ~~12 Duplex~~ 12 Unit Duplex Building

Case 054-21: Approximately 550 feet South of the intersection of S. Rex Ave. and E. 13th St. - Rezoning



Case 054-21: Approximately 550 feet South of the intersection of S. Rex Ave. and E. 13th St. – A request to remove from District M-2 (Heavy Industrial) and include in District R-3 (Apartment House) for future residential development – Hung Nguyen

N

0 100 200 400 600 800 Feet

CITY OF JOPLIN
COUNCIL AGENDA ITEM

ITEM:
CB 2021-287 – Rezone M-2 to R-3.

MEETING DATE:
November 1, 2021

ORIGINATING DEPARTMENT:
Planning, Development and Neighborhood Services

REVIEWED BY:
Director of Planning, Development & Neighborhood Services-Troy Bolander, Director of Finance-Leslie Haase, City Attorney- Peter Edwards, City Manager-Nicholas Edwards.

SUMMARY REQUEST:
Case 054-21: Approximately 550 feet South of the intersection of S. Rex Ave. and E. 13th St. – A request to remove from District M-2 (Heavy Industrial) and include in District R-3 (Apartment House) for future residential development – Hung Nguyen

BACKGROUND:
The change in zoning will not be detrimental to nearby property. The uses permitted in R-3 are significantly less intense than those permitted in the current M-2 district. Furthermore, the majority of uses within the Joplin city limits along Rex Ave. are high-density residential or commercial.

This request to rezone to R-3 is for future duplex or multi-family development on the site. No buffer is required in this case. Stormwater management would be required with any development due to the size. Proper fire access will also be required, and an extension of fire hydrants may be required per the fire marshal.

PLANNING & ZONING COMMISSION TESTIMONY:
Hung Nguyen, 3411 E 11th Street, Joplin, MO. We own a piece of property behind 15th Street Wal-Mart by the water tower. We were wanting to build some duplexes. Right now, just rezone the property. We will start building next year.

PUBLIC COMMENT;
None.

RECOMMENDATIONS:
Staff recommends approval for Case 054-21.
Planning & Zoning Commission recommends approval for Case 054-21 (6 Favor, 0 Nays, 1 Absent)

ATTACHMENTS
CB 2021-287, Staff Planning Report, P&Z Commission Minutes

P & Z Case 054-21
Hung Nguyen
(P & Z Recommended Approval)

COUNCIL BILL NO. 2021-287 ORDINANCE NO.

AN ORDINANCE amending Ordinance No. 2004-256, passed by the Council of the City of Joplin, Missouri, November 15, 2004, by removing from District M-2 (Heavy Industrial) and including in District R-3 (Apartment House) property as described below and located at approximately 550 feet South of the intersection of S. Rex Ave and E. 13th Street, in the City of Joplin, Jasper County, Missouri.

NOW, THEREFORE, BE IT ORDAINED BY THE COUNCIL OF THE CITY OF JOPLIN, MISSOURI, as follows:

Section 1. Having referred the subject matter of this ordinance to the City Planning and Zoning Commission and having given at least fifteen days' notice of time and place of hearing on same by publication in the Joplin Globe, Ordinance No. 2004-256 is hereby amended by the following described property and including in District R-3:

Tract 1: A survey of a parcel of land in the Southwest Quarter of Section 7, Township 27 North, Range 32 West, in the City of Joplin, Jasper County, Missouri, being a portion of the property described as tract two, in the Jasper County, Missouri, Recorder's Office in Book 1561 at Page 1647, being more particularly described as follows: Commencing at the center of Section 7, Township 27 North, Range 32 West, Jasper County, Missouri, thence along the North line of the Southwest Quarter of Section 7, North 88 degrees 28 minutes 56 seconds West, 900.80 feet, thence leaving said North line, South 01 degrees 36 minutes 39 seconds West 882.20 feet to a point on the West right-of-way ling of Rex Avenue, thence leaving said West line, North 88 degrees 28 minutes 58 seconds West 490.78 feet to the Point of Beginning, thence continuing North 88 degrees 28 minutes 58 seconds West 100.00 feet to the Southwest corner of aforementioned tract two, thence along the West line of tract two, North 01 degrees 44 minutes 18 seconds East 208.00 feet to the Northeast corner of tract two, thence along the North line thereof, South 88 degrees 28 minutes 58 seconds East 100.00 feet, thence leaving said North line South 01 degrees 44 minutes 18 seconds West 208.00 feet to the Point of beginning, All lying in the Southwest Quarter of Section 7, Township 27 North, Range 32 West, in the City of Joplin, Jasper County, Missouri. Tract 2: a survey of a parcel of land in the Southwest Quarter of Section 7, Township 27 North, Range 32 West, in the City of Joplin, Jasper County, Missouri, being a portion of the property described as tract two, in the Jasper County, Missouri, Recorder's Office in Book 1561 at Page 1647, being more particularly described as follows: Commencing at the center of Section 7, Township 27 North, Range 32 West, Jasper County, Missouri, thence along the North line of the Southwest Quarter of Section 7, North 88 degrees 28 minutes 56 seconds West 900.80 feet, thence leaving said North line, South 01 degrees 36 minutes 39 seconds West 674.20 feet to a point on the West right-of-way line of Rex Avenue and the Point of Beginning, thence along said West right-of-way line South 01 degrees 36 minutes 39 seconds West 168.00 feet, thence leaving said West line, North 88 degrees 28 minutes 58 seconds West 100.28 feet, thence North 01 degrees 36 minutes 39 seconds East 100.00 feet, thence North 88 degrees 28 minutes 58 seconds West 150.00 feet, thence South 01 degrees 36 minutes 39 seconds West 140.00 feet, thence North 88 degrees 28 minutes 58 seconds West 240.50 feet, thence North 01 degrees 44 minutes 18

seconds East 208.00 feet, thence South 88 degrees 28 minutes 58 seconds East 490.32 feet to the Point of Beginning, All lying in the Southwest Quarter of Section 7, Township 27 North, Range 32 West, in the City of Joplin, Jasper County, Missouri.

Section 2. That the City Clerk is hereby ordered to file this ordinance with the Zoning District Map maintained in her office and to note the changes herein provided thereon.

PASSED BY THE COUNCIL OF THE CITY OF JOPLIN, MISSOURI, this the _____ day of_____, 2021, by a vote of _____.

_____
Ryan D. Stanley, Mayor

ATTEST:

_____
Barbara J. Gollhofer, City Clerk

APPROVED AS TO FORM:

_____
Peter C. Edwards, City Attorney

P & Z Case 055-21
Jim Satlak
(P & Z Recommended Approval)

COUNCIL BILL NO. 2021-288 ORDINANCE NO.

AN ORDINANCE amending Ordinance No. 2004-256, passed by the Council of the City of Joplin, Missouri, November 15, 2004, by removing from District R-2 (Two- Family Residential) and including in District R-3 (Apartment House) property as described below and located at 3431 E 10th Street, City of Joplin, Jasper County, Missouri.

NOW, THEREFORE, BE IT ORDAINED BY THE COUNCIL OF THE CITY OF JOPLIN, MISSOURI, as follows:

Section 1. Having referred the subject matter of this ordinance to the City Planning and Zoning Commission and having given at least fifteen days' notice of time and place of hearing on same by publication in the Joplin Globe, Ordinance No. 2004-256 is hereby amended by the following described property and including in District R-3:

All of Lots Numbered Sixty-one (61), Sixty-two (62), Sixty-three (63), and Sixty-four (64) in Oak Ridge Sub-division in the City of Joplin, Jasper County, Missouri.

Section 2. That the City Clerk is hereby ordered to file this ordinance with the Zoning District Map maintained in her office and to note the changes herein provided thereon.

PASSED BY THE COUNCIL OF THE CITY OF JOPLIN, MISSOURI, this the _____ day of_____, 2021, by a vote of _____.

_____
Ryan D. Stanley, Mayor

ATTEST:

_____
Barbara J. Gollhofer, City Clerk

APPROVED AS TO FORM:

_____
Peter C. Edwards, City Attorney

CITY OF JOPLIN
COUNCIL AGENDA ITEM

ITEM:
CB 2021-288 – Rezone R-2 to R-3.

MEETING DATE:
November 1, 2021

ORIGINATING DEPARTMENT:
Planning, Development and Neighborhood Services

REVIEWED BY:
Director of Planning, Development & Neighborhood Services-Troy Bolander, Director of Finance-Leslie Haase, City Attorney- Peter Edwards, City Manager-Nicholas Edwards.

SUMMARY REQUEST:
Case 055-21: 3431 E. 10th St. – A request to remove from District R-2 (Two-family Residential) and include in District R-3 (Apartment House) for future residential development – Jim Satlak

BACKGROUND:
The change in zoning will not be detrimental to nearby property. The uses permitted in R-3 still of residential nature. In addition, a buffer yard will be required where the property directly abuts R-2 districts.

This request to rezone to R-3 is for a future multi-family development within the existing structure, with a possible small addition. The property will exhibit a unit density below that of the property directly to the West despite having a multi-family use.

PLANNING & ZONING COMMISSION TESTIMONY:
Keegan Stanton, 602 S. Main Street, Joplin, MO. This is a rezoning case, and this piece of property does have an existing structure. Historically this building was used for a hospice care and assisted living. There are quite a few bedrooms and bathrooms in this building. Mr. Satlak is requesting this zoning for 4 to 7 units for multi-family housing and a small addition to the structure as well

PUBLIC COMMENT;
None.

RECOMMENDATIONS:
Staff recommends approval for Case 055-21.
Planning & Zoning Commission recommends approval for Case 055-21 (6 Favor, 0 Nays, 1 Absent)

ATTACHMENTS
CB 2021-288, Staff Planning Report, P&Z Commission Minutes

Z&P Meeting: October 11, 2021
City Council Meeting: November 1, 2021

STAFF PLANNING REPORT
Rezoning

CASE 055-21 A request to remove from District R-2 (Two-family Residential) and include in District R-3 (Apartment House) for future residential development.

LOCATION 3431 E. 10th St.

APPLICANT Jim Satlak

EXISTING CONDITIONS

Zoning	Land Use	Property Size
R-2	Vacant structure	Approx. 2 acres

SITE CONTEXT

	North	East	South	West
Existing Zoning	R-2	Out of City Limits	R-2	R-2
Land Use	Vacant	Single-family Residential	Single-family Residential	Two-family Residential

FUTURE LAND USE

Joplin's Future Land Use Map shows this property as future Low-density Residential.

TRANSPORTATION

Streets with access	Classification	Right-of-way width
E. 10th Ave.	Local	50'

UTILITIES

Utilities in place.

FLOOD PLAIN

This property is not in a flood plain.

STAFF ANALYSIS

CONSISTENT WITH DEVELOPMENT POLICIES OF THE COMPREHENSIVE PLAN?

This request is consistent with the Comprehensive Plan. The future land use map does indicate future low-density residential. However, this request is consistent with the infill development goals in that plan.

THE SUITABILITY OF THE SUBJECT PROPERTY FOR THE USES TO WHICH IT HAS BEEN RESTRICTED

The current zoning of R-2 is suitable for this property.

THE EXTENT THAT THE ZONING CHANGE WILL DETRIMENTALLY AFFECT NEARBY PROPERTY

The change in zoning will not be detrimental to nearby property. The uses permitted in R-3 still of residential nature. In addition, a buffer yard will be required where the property directly abuts R-2 districts.

DISCUSSION

This request to rezone to R-3 is for a future multi-family development within the existing structure, with a possible small addition. The property will exhibit a unit density below that of the property directly to the West despite having a multi-family use. Even so, a buffer yard will be required along the West property line.

The request is found to be consistent with the comprehensive plan and future land use map.

Staff recommends approval of Case 055-21.

ATTACHMENTS

- Application
- Map

REZONING APPLICATION FORM

Return Form to:
Planner
Joplin City Hall
602 S. Main Street
Joplin, Missouri 64801
417-624-0820 Ext. 1511
FAX 417-625-4738

For Office Use Only

Case No.: 055-21
Filing Fee: $550.00
Date Advertised:
Date Notices Sent 10-4-21
Public Hearing Date: 10-11-21

APPLICANT: JIM SATLAK JMJ RENTALS PHONE: 417 540596
ADDRESS: 3431 E TENTH EMAIL:

OWNER: JIM SATLAK PHONE: 417 540596
ADDRESS: P.O. Box 597 JOPLIN MO 64802-0597 EMAIL:

LOCATION/ADDRESS OF PROPERTY: 3431 E TENTH

Present Zoning R-2 Requested Zoning: R-3 Acreage: ~ 2ac.
Present Use of Property: Vacant multi-unit house

SURROUNDING LAND USE AND ZONING:

	Land Use	Zoning
North	Vacant	R-2
South	Single-family	R-2
East	Single-family	out of Joplin
West	Duplexes	R-2

Character of the Neighborhood: Mixed housing types

RELATIONSHIP TO EXISTING ZONING PATTERN:

1. Would proposed change create a small, isolated district unrelated to surrounding districts?
   YES
2. Are there substantial reasons why the property cannot be used in accord with existing zoning?
   If yes, explain: NO

CONFORMANCE WITH COMPREHENSIVE PLAN:

1. Consistent with Development Policies? YES
2. Consistent with Future Land Use Map? YES

TRAFFIC CONDITIONS:

1. Street(s) with Access to Property: 10TH ST
2. Classification of Street(s):
   Arterial_____ Collector_____ Local _____
3. Right-of-Way Width: _____
4. Will turning movements caused by the proposed use create an undue traffic hazard?
   NO

IS PLATTING OR REPLATTING REQUIRED IN ORDER TO PROVIDE FOR:

1. Appropriately Sized Lots?_____
2. Properly Sized Street Right-of-Way?_____
3. Drainage Easements?_____
4. Utility Easements:
   - Electricity?_____
   - Gas?_____
   - Sewers?_____
   - Water?_____
5. Additional Comments:_____

UNIQUE CHARACTERISTIC OF PROPERTY AND/OR ADDITIONAL COMMENT:

THE FOLLOWING **MUST** ACCOMPANY YOUR APPLICATION:

1. One copy of a legal description of the property proposed to be rezoned from a deed or certified survey. Must be legible.
2. One copy of a statement describing the reasoning for the rezoning, the impact of the proposed change, including any traffic conditions that may result; any danger from fire hazards; how the proposed change may affect the character of the surrounding properties; and how the proposed change will benefit the City of Joplin.
3. Owner Affidavit and Agent Affidavit, if applicant applying for the rezoning is not the owner of the property be rezoned

SIGNATURE: James Sattler DATE: AUG 27 2021

TITLE: OWNER

Case 055-21: 3431 E. 10th St. - Rezoning

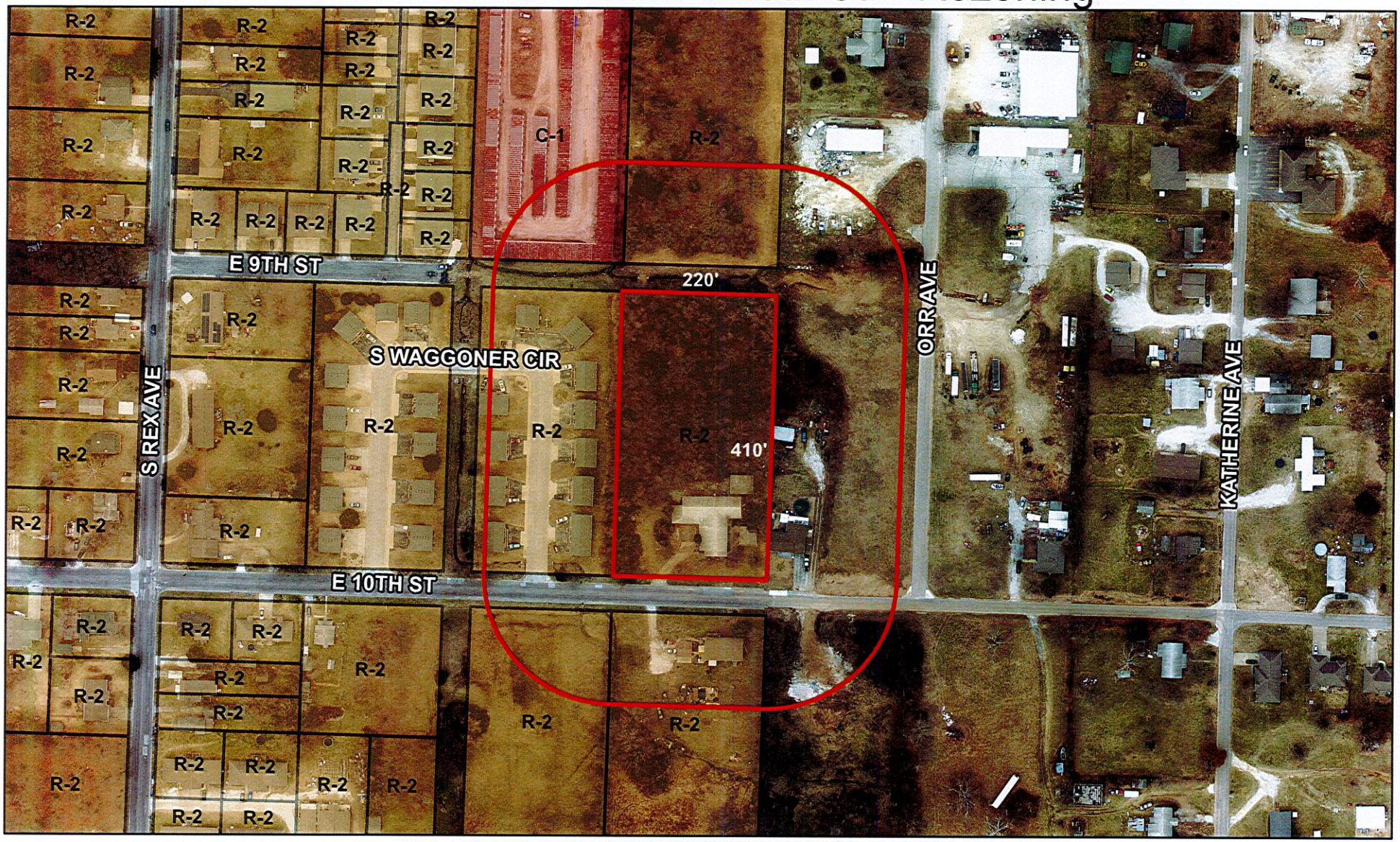

Case 055-21: 3431 E. 10th St. – A request to remove from District R-2 (Two-family Residential) and include in District R-3 (Apartment House) for future residential development – Jim Satlak

CB 2021-288

Case 055-21: 3431 E. 10th St. – A request to remove from District R-2 (Two-family Residential) and include in District R-3 (Apartment House) for future residential development – Jim Satlak.

Keegan Stanton, 602 S. Main Street, Joplin, MO. This is a rezoning case, and this piece of property does have an existing structure. Historically this building was used for a hospice care and assisted living. There are quite a few bedrooms and bathrooms in this building. Mr. Satlak is requesting this zoning for 4 to 7 units for multi-family housing and a small addition to the structure as well.

Mr. Kimble wanted to know about the parking for that many units.

Mr. Stanton stated he will be required to provide 2 off-street spaces per unit.

Mr. Eastman asked the Commissioners if they had any other questions? They did not. Mr. Eastman asked if there was anyone to speak in favor or against of this case? There was not.

MS. STEELE MOVED, SECONDED BY MR. KIMBLE THAT CASE 055-21 BE FORWARDED TO THE CITY COUNCIL WITH THE RECOMMENDATION FOR APPROVAL. MOTION CARRIED, WITH MS. STEELE, MR. EASTMAN, MR. MCCULLOUGH, MR. KIMBLE, MS. PHILLIPS, AND MS. WARREN "AYE", (6 IN FAVOR, 1 ABSENT)

CB 2021-289

Case 056-21: Approximately 175 feet North of the intersection of S. Connecticut Ave. and E. 24th St. – A request to remove from District C-O (Non-retail Commercial) and include in District C-3 (Commercial) for future Commercial development – Benchmark Estate, LLC.

TJ Ghandi, Discount Smokes and Liquor, 25 Coleridge, Joplin, MO. The property is located next to Ozark Prosthetics and Orthotics and they do own the property. This will be Discount Express, which will be a C-Store about 5,000 square feet building with 8 dispensers.

Mr. Eastman asked the Commissioners if they had any other questions? They did not. Mr. Eastman asked if there was anyone to speak in favor or against of this case? There was not.

Mr. Kimble stated that the entrance and exit is really close to the stoplight. Are there any hazards there? Coming in and exiting by the intersection?

Mr. Stanton stated they would review that in more detail, if it is too close then the traffic engineer will be looking at it.

Mr. Eastman asked the Commissioners if they had any other questions? They did not. Mr. Eastman asked if there was anyone to speak in favor or against of this case? There was not.

MR. KIMBLE MOVED, SECONDED BY MS/ STEELE THAT CASE 056-21 BE FORWARDED TO THE CITY COUNCIL WITH THE RECOMMENDATION FOR APPROVAL. MOTION CARRIED, WITH MS. STEELE, MR. EASTMAN, MR. MCCULLOUGH, MR. KIMBLE, MS. PHILLIPS, AND MS. WARREN "AYE", (6 IN FAVOR, 1 ABSENT)

Z&P Meeting: October 11, 2021
City Council Meeting: November 1, 2021

STAFF PLANNING REPORT
Rezoning

CASE 056-21 A request to remove from District C-O (Non-retail Commercial) and include in District C-3 (Commercial) for future Commercial development

LOCATION Approximately 175 feet North of the intersection of S. Connecticut Ave. and E. 24th St.

APPLICANT Benchmark Estate, LLC

EXISTING CONDITIONS

Zoning	Land Use	Property Size
C-O	Vacant	Approx. 1.18 acres

SITE CONTEXT

	North	East	South	West
Existing Zoning	C-O	C-O	R-1	R-1
Land Use	Office/Medical	Single-family Residential	Substation	Vacant

FUTURE LAND USE

Joplin's Future Land Use Map shows this property as future Commercial Opportunity Area.

TRANSPORTATION

Streets with access	Classification	Right-of-way width
S. Connecticut Ave.	Collector	60'

UTILITIES

Utilities in place.

FLOOD PLAIN

This property is not in a flood plain.

STAFF ANALYSIS

CONSISTENT WITH DEVELOPMENT POLICIES OF THE COMPREHENSIVE PLAN?

This request is consistent with the Comprehensive Plan. The future land use map does indicate future Commercial Opportunity Area. This request is consistent with the infill goals as well.

THE SUITABILITY OF THE SUBJECT PROPERTY FOR THE USES TO WHICH IT HAS BEEN RESTRICTED

The current zoning of C-O is suitable for this property.

THE EXTENT THAT THE ZONING CHANGE WILL DETRIMENTALLY AFFECT NEARBY PROPERTY

The change in zoning will not be detrimental to nearby property. A buffer will be required where this property abuts C-O and R-1 zoning.

DISCUSSION

This request to rezone to C-3 is for future C-store development. The proposed development will be required to meet the S. Connecticut design guidelines from the Comprehensive Plan. These are significantly more stringent than our base development guidelines from the Zoning Code. There will be required buffers on the three property lines that do not abut Connecticut.

This portion of Connecticut – being south of 20th St. to 32nd St. – is undergoing a transition from more residential uses to more commercial and high density residential uses, as indicated by the Commercial Opportunity Area designation on the future land use map. Most of the property between 20th and 24th is now zoned C-O, C-1, or C-3.

The request is found to be consistent with the comprehensive plan and future land use map.

Staff recommends approval of Case 056-21.

ATTACHMENTS

- Application
- Map

REZONING APPLICATION FORM

Return Form to:
Planning / Community Development Specialist
Joplin City Hall
602 South Main Street
Joplin, Missouri 64801
417-624-0820 Ext. 511
FAX 417-625-4738

For Office Use Only

Case No.: 056-21
Filing Fee: $550.00
Date Advertised:
Date Notices Sent 10-4-21
Public Hearing Date: 10-11-21

APPLICANT: Benchmark Estate LLC. PHONE: 469.258.9749
ADDRESS: ZIP:

OWNER: Benchmark Est. LLC. PHONE:
ADDRESS: 25- Gearidge Dr. ZIP: 64804

LOCATION/ADDRESS OF PROPERTY: 2318 Connecticut

Present Zoning CO Requested Zoning: C-3 Acreage: 1.18
Present Use of Property:

SURROUNDING LAND USE AND ZONING:

	Land Use	Zoning
North	Joplin PROSTHETICS	CO.
South	Empire Sub station	R1
East	VACANT	CO.
West	VACANT	CO.

Character of the Neighborhood: Mixed Used --- PROF. Offices ---
2- C. Stores --- Multi & single family --- Railline ---

RELATIONSHIP TO EXISTING ZONING PATTERN:

1. Would proposed change create a small, isolated district unrelated to surrounding districts?
   We Do not Think it would.
2. Are there substantial reasons why the property cannot be used in accord with existing zoning?
   If yes, explain: Underground Fuel Tanks Drive through.

CONFORMANCE WITH COMPREHENSIVE PLAN:

1. Consistent with Development Policies? Yes.
2. Consistent with Future Land Use Map? Yes.

TRAFFIC CONDITIONS:

1. Street(s) with Access to Property: CONNECTICUT Ave.
2. Classification of Street(s):
   Arterial ✓ Collector _____ Local _____
3. Right-of-Way Width: _____
4. Will turning movements caused by the proposed use create an undue traffic hazard?
   NO.

IS PLATTING OR REPLATTING REQUIRED IN ORDER TO PROVIDE FOR:

1. Appropriately Sized Lots? NO.
2. Properly Sized Street Right-of-Way? NO.
3. Drainage Easements? TBD.
4. Utility Easements:
   - Electricity? NO.
   - Gas? NO.
   - Sewers? NO.
   - Water? NO.
5. Additional Comments: _____

UNIQUE CHARACTERISTIC OF PROPERTY AND/OR ADDITIONAL COMMENT:

THE FOLLOWING **MUST** ACCOMPANY YOUR APPLICATION:

1. One copy of a legal description of the property proposed to be rezoned from a deed or certified survey.
2. One copy of a statement describing the reasoning for the rezoning, the impact of the proposed change, including any traffic conditions that may result; any danger from fire hazards; how the proposed change may affect the character of the surrounding properties; and how the proposed change will benefit the City of Joplin.
3. Owner Affidavit, if applicant applying for the rezoning is not the owner of the property be rezoned

SIGNATURE: _____ DATE: 9/9/21

EMAIL: tJgandhi786@gmail.com.

TITLE: President.

2318 Connecticut Rezoning Request - Benchmark, Inc

We are requesting the rezoning of this property in order to construct a convenience store with underground fuel tanks and with a drive-through. The immediate area currently has Casey's General store and Zips convenience store along Connecticut Avenue. Directly north of the property is Joplin Prosthetics who are the owners of the land we seek to rezone. Directly south of the property is a Liberty substation that also wraps along the west or rear of this parcel. This parcel is located on the west side of Connecticut that would not directly impact or meet any residential property. Connecticut Avenue has a turn lane we believe will handle the traffic flow created as a convenience store business traffic comes and goes rather quickly. The benefits to Joplin would be economic growth, sales tax revenue and additional employment opportunities.

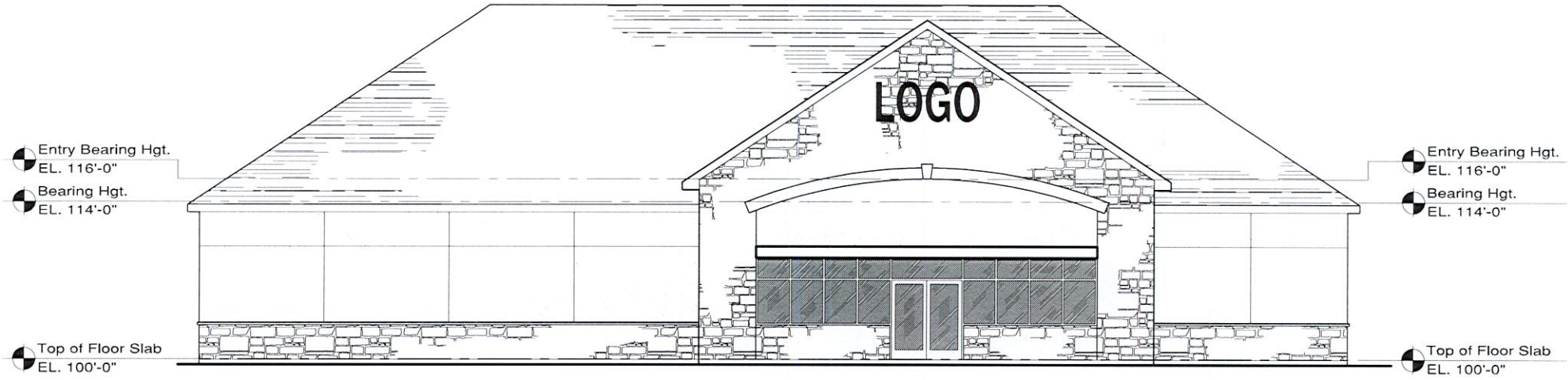

East Elevation

SCALE: NTS

Floor Plan Notes

1. CONTRACTOR SHALL FIELD VERIFY ALL EXISTING CONDITIONS.
2. CONTRACTOR SHALL FIELD VERIFY ALL DIMENSIONS
3. SEE ROOM FINISH SCHEDULE/NOTES FOR FINISHES.
4. PROVIDE ADEQUATE BLOCKING IN WALLS FOR TOILET ACCESSORIES, PARTITIONS, SHELVING, MILLWORKS, ETC. VERIFY WITH OWNER OF ANY BLOCKING REQUIREMENTS OF ANY OWNER INSTALLED ITEMS.
5. FURNITURE & WINDOW TREATMENTS ARE NOT IN CONTRACT (N.I.C.) UNLESS OTHERWISE NOTED ON DRAWINGS.
6. MILLWORK CONTRACTOR SHALL FIELD VERIFY FINAL DIMENSIONS.
7. PROVIDE & INSTALL SOUND BATT INSULATION AT ALL INTERIOR WALLS
8. SEE PLUMBING, MECHANICAL, & ELECTRICAL SHEETS FOR IN-SLAB REQUIREMENTS.

Floor Plan Abbreviations

(N.I.C.)	NOT IN CONTRACT. FURNISHED AND INSTALLED BY OTHERS.
(TYP.)	TYPICAL
(RR)	RESTROOM
(DEMO)	DEMOLITION, DEMOLISH OR REMOVE
A.F.F.	ABOVE FINISH FLOOR
F.C. GPDW	FIRE CODE GYPSUM DRYWALL
F.E.	FIRE EXTINGUISHER
D.S.	DOWNSPOUT
F.D.	FLOOR DRAIN (SEE PLUMBING PLANS)
T.B.D.	TO BE DETERMINED
S.B.	SOUND BATT INSULATION

Floor Plan Legend

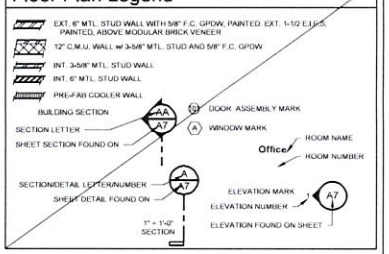

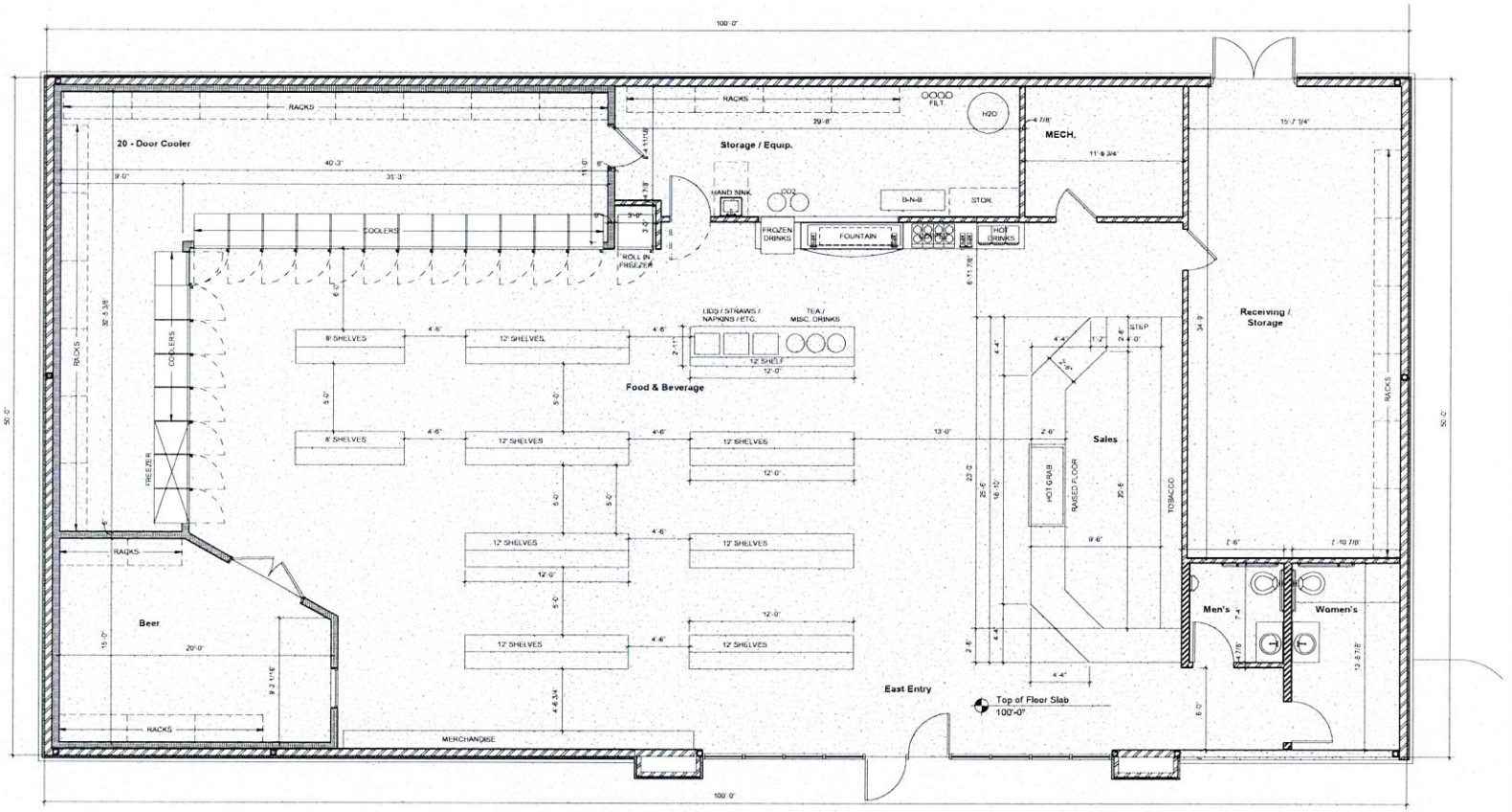

Floor Plan
SCALE: 1/4" = 1'-0"

5,000 SF

HUNTER & MILLARD ARCHITECTS, INC.
1501 S. Main Street
Joplin, MO 64804
417-623-4552
hunterandmillard.com
Missouri Certificate of Authority A-2008008317

Revisions By

New Construction For:
Turtle Stop C-Store
Seneca, Missouri

PRELIMINARY
Elliott D. Hunter, Architect
Missouri A-4617

Drawn By
Checked By
Date
8-20-2021
Scale
As indicated
Job Number
21xx
Floor Plan
A1

Site Plan

SCALE: 1" = 20'-0"

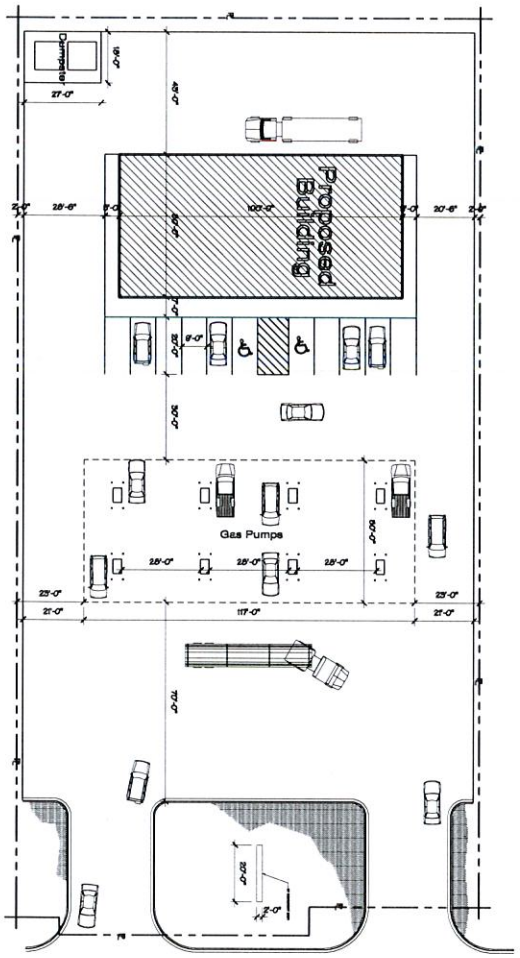

S. Connecticut Ave.

Sheet	1
Sheet Name	Floor Plan
Job No.	2154
Scale	1/8" = 1'-0"
Date	
Checked By	
Drawn By	

Preliminary
07.12.2021

New Construction for

Gas Station

2312 S Connecticut Ave. Joplin, MO

REVISIONS	BY

HUNTER & MILLARD ARCHITECTS, INC.

1801 S. Main Street
Joplin, MO 64804
(417) 624-8872
hunterandmillard.com

Missouri Certificate of Authority: A-2008008317



East Elevation

SCALE: NTS

Case 056-21: Approximately 175 feet North of the intersection of S. Connecticut Ave. and E. 24th St. - Rezone

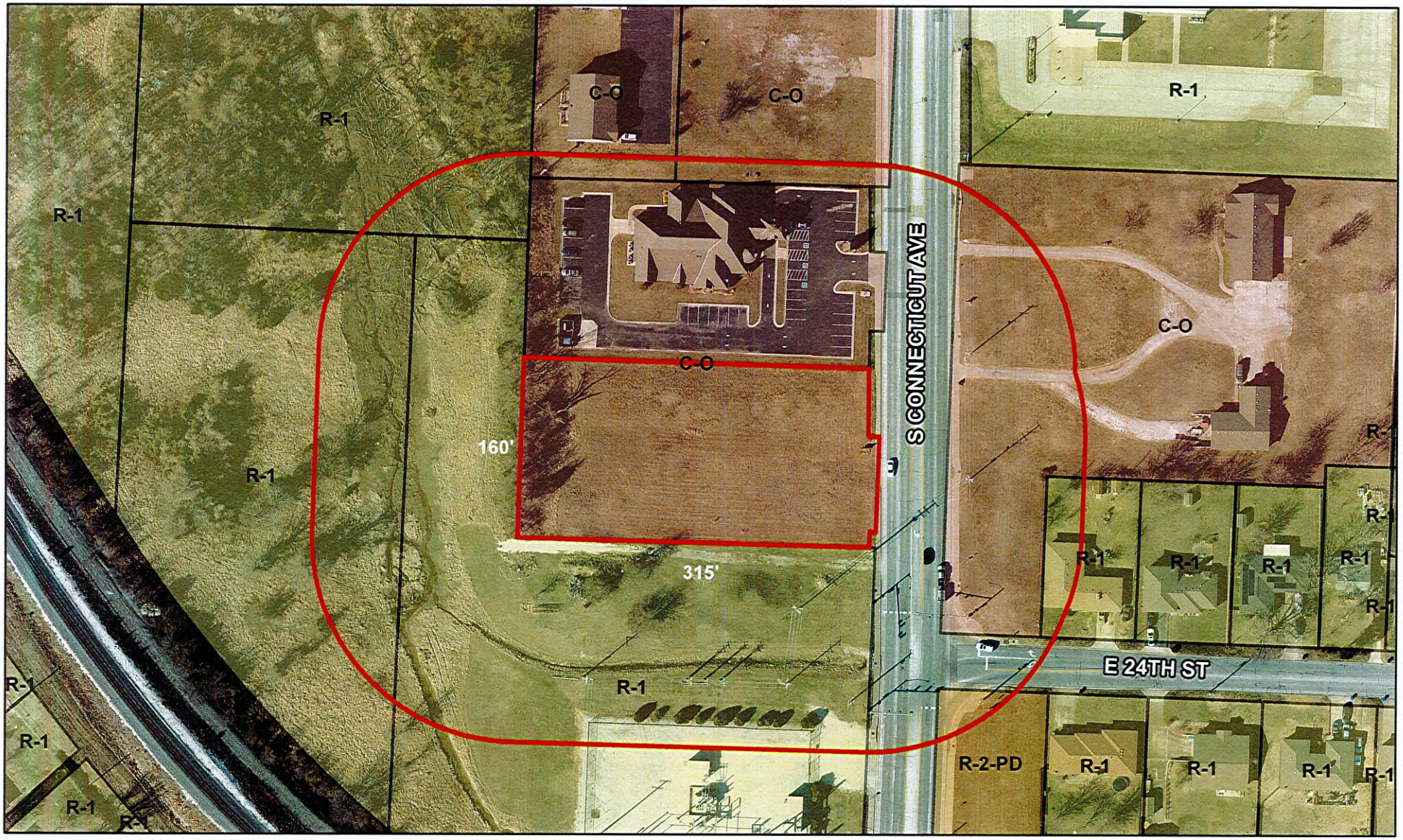

Case 056-21: Approximately 175 feet North of the intersection of S. Connecticut Ave. and E. 24th St. – A request to remove from District C-O (Non-retail Commercial) and include in District C-3 (Commercial) for future Commercial development – Benchmark Estate, LLC.

N

0 50 100 200 300 400 Feet

CITY OF JOPLIN
COUNCIL AGENDA ITEM

ITEM:
CB 2021-289 – Rezone C-O to C-3.

MEETING DATE:
November 1, 2021

ORIGINATING DEPARTMENT:
Planning, Development and Neighborhood Services

REVIEWED BY:
Director of Planning, Development & Neighborhood Services-Troy Bolander, Director of Finance-Leslie Haase, City Attorney- Peter Edwards, City Manager-Nicholas Edwards.

SUMMARY REQUEST:
Case 056-21: Approximately 175 feet North of the intersection of S. Connecticut Ave. and E. 24th St. – A request to remove from District C-O (Non-retail Commercial) and include in District C-3 (Commercial) for future Commercial development – Benchmark Estate, LLC.

BACKGROUND:
This request to rezone to C-3 is for future C-store development. The proposed development will be required to meet the S. Connecticut design guidelines from the Comprehensive Plan. These are significantly more stringent than our base development guidelines from the Zoning Code. There will be required buffers on the three property lines that do not abut Connecticut.

This portion of Connecticut – being south of 20th St. to 32nd St. – is undergoing a transition from more residential uses to more commercial and high-density residential uses

PLANNING & ZONING COMMISSION TESTIMONY:
TJ Ghandi, Discount Smokes and Liquor, 25 Coleridge, Joplin, MO. The property is located next to Ozark Prosthetics and Orthotics and they do own the property. This will be Discount Express, which will be a C-Store about 5,000 square feet building with 8 dispensers.

Mr. Kimble stated that the entrance and exit is really close to the stoplight. Are there any hazards there? Coming in and exiting by the intersection?

Mr. Stanton stated they would review that in more detail, if it is too close then the traffic engineer will be looking at it.

PUBLIC COMMENT;
None.

RECOMMENDATIONS:
Staff recommends approval for Case 056-21.
Planning & Zoning Commission recommends approval for Case 056-21 (6 Favor, 0 Nays, 1 Absent)

ATTACHMENTS
CB 2021-289, Staff Planning Report, P&Z Commission Minutes

P & Z Case 056-21
Benchmark Estate, LLC.
(P & Z Recommended Approval)

COUNCIL BILL NO. 2021-289 ORDINANCE NO.

AN ORDINANCE amending Ordinance No. 2004-256, passed by the Council of the City of Joplin, Missouri, November 15, 2004, by removing from District C-O (Non-retail Commercial) and including in District C-3 (Commercial) property as described below and located at approximately 175 feet of the intersection of S. Connecticut Ave and E. 24th Street.

NOW, THEREFORE, BE IT ORDAINED BY THE COUNCIL OF THE CITY OF JOPLIN, MISSOURI, as follows:

Section 1. Having referred the subject matter of this ordinance to the City Planning and Zoning Commission and having given at least fifteen days' notice of time and place of hearing on same by publication in the Joplin Globe, Ordinance No. 2004-256 is hereby amended by the following described property and including in District C-3:

A part of the Lot Ninety (90), Southmorland Acres, an addition to the City of Joplin, Missouri described as follows: commencing at the Northeast Corner of said Lot 90, thence South 01°58'54" West, along the East line of said Lot 90, 578.10 feet to the point of Beginning; thence South 01°58'54" West, along said East line of Lot 90, 166.75 feet to an existing iron pin; thence North 78°50'46" West 319.00 feet; thence North 01°25'53" East, 165.00 feet to an iron pin (PLS-2007017965); thence South 88°04'12" East, 319.00 feet to the Point of Beginning, except any part taken or deeded for road purposes.

Section 2. That the City Clerk is hereby ordered to file this ordinance with the Zoning District Map maintained in her office and to note the changes herein provided thereon.

PASSED BY THE COUNCIL OF THE CITY OF JOPLIN, MISSOURI, this the _____ day of_____, 2021, by a vote of _____.

_____
Ryan D. Stanley, Mayor

ATTEST:

_____
Barbara J. Gollhofer, City Clerk

APPROVED AS TO FORM:

_____
Peter C. Edwards, City Attorney

CB 2021-290

Case 057-21: Approximately 700 feet East of the intersection of E. 9th St. and S. Rex Ave. – A request to vacate street right-of-way – Jim Satlak

Keegan Stanton, 602 S. Main Street, Joplin, MO. This is roughly the same property that came before you for rezoning, there is some 9th Street right-of-way up on the north side, which is unimproved. Orr Ave, which is now in Duquesne was originally platted abutting the East side of Mr. Satlak's property. He is requesting that both rights-of-way be vacated. There are no utilities in there, except for unused sewer. He is the owner of all properties surrounding this request.

Mr. Kimble mentioned the old sewer is how long or how big.

Mr. Stanton stated he did not know.

Mr. Eastman asked the Commissioners if they had any other questions? They did not. Mr. Eastman asked if there was anyone to speak in favor or against of this case? There was not.

MS. STEELE MOVED, SECONDED BY MR. MCCULLOUGH THAT CASE 057-21 BE FORWARDED TO THE CITY COUNCIL WITH THE RECOMMENDATION FOR APPROVAL. MOTION CARRIED, WITH MS. STEELE, MR. EASTMAN, MR. MCCULLOUGH, MR. KIMBLE, MS. PHILLIPS, AND MS. WARREN "AYE", (6 IN FAVOR, 1 ABSENT)

Z&P Meeting: October 11, 2021
City Council Meeting: November 1, 2021

STAFF PLANNING REPORT
Vacation

CASE 057-21 A request to vacate 9th St. and Orr Ave. right-of-way.

APPLICANT Jim Satlak

REPRESENTATIVE Jim Satlak

LOCATION 3431 E. 10th St.

EXISTING CONDITIONS

Easement Type(s)	Easement Size
Street Right-of-Way	Approximately 20' x 410'
Street Right-of-Way	Approximately 40' x 220'

REASON FOR VACATION

Jim Satlak has petitioned for this street vacation in order to consolidate his land holdings to the North and East and redevelop the site for future residential development.

UTILITIES CURRENTLY LOCATED IN THE RIGHT-OF-WAY?

Utilities are not currently in the Right-of-Way. Rerouting of utilities is not required to maintain current services to adjoining properties.

UTILITIES PLANNED TO LOCATE IN THE RIGHT-OF-WAY?

No plans for new utilities to be located in the right-of-way.

STAFF ANALYSIS

PRIVATE RIGHTS WILL NOT BE INJURED OR ENDANGERED BY THIS VACATION.

The applicant holds the land on either side of this proposed vacation, so no private party would be affected by the vacation but the applicant.

THE VACATION WILL NOT CAUSE THE PUBLIC TO SUFFER A LOSS OR INCONVENIENCE.

The street right-of-way is presently unimproved. There is no public access through this right-of-way and it currently serves as access to no property.

IN JUSTICE TO THE APPLICANT(S) THE VACATION SHOULD BE GRANTED.

Yes.

DISCUSSION

This vacation is being sought for the consolidation of the site. This property is presently zoned R-2, and that designation would be extended to the vacated property should this item pass. Orr Ave. is presently located in Duquesne – the right-of-way being requested to be vacated is the originally planned alignment for Orr Ave. that was never built.

Staff recommends approval of Case 057-21.

ENCLOSURES

- Application
- Map

CITY OF JOPLIN

APPLICATION FOR VACATION OF STREET OR RESERVATION

Return Form and Attachments to:
Planner
Joplin City Hall
602 S. Main Street
Joplin, Missouri 64801
417-624-0820 Ext. 1511
FAX 417-625-4738

For Office Use Only

Case No.: 057-21
Filing Fee: $550.00
Date Advertised:
Date Notices Sent 10-4-21
Public Hearing Date: 10-12-21

I. Applicant Name: JIM SOTCAK Phone: 417 540 5976

If more than one property applicant, please submit additional names, address and phone numbers on attached sheet(s)

Address: P.O. Box 597 JOPLIN MO 64802-0597 Email:

II. Type of vacation requested (check one):

Street Vacation X

Alley Vacation_____

Utility Vacation____

Other (Please specify)_____

III. Location of street, alley, utility easement, or other reservation: 9TH AND ORA

IV. Please indicate below the extent to which the following standards are met, in the applicant's opinion.

1. Private rights will not be injured or endangered by the vacation. NO

2. The vacation will not cause the public to suffer a loss or inconvenience. NO

3. In justice to the applicant(s) the vacation should be granted. YES

Approximately 700 feet East of the intersection of E. 9th St. and S. Rex Ave. – Vacation

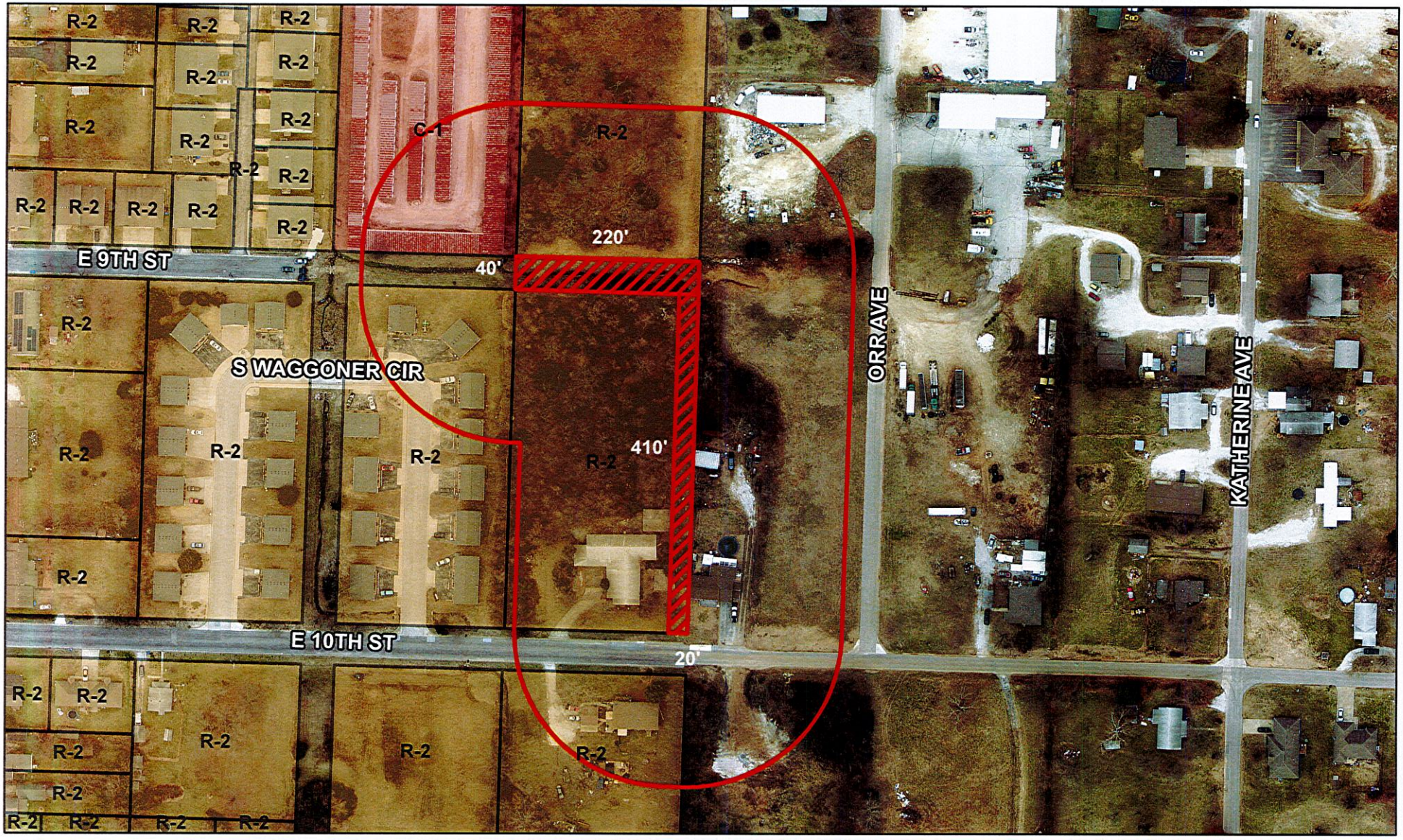

Case 057-21: Approximately 700 feet East of the intersection of E. 9th St. and S. Rex Ave. – A request to vacate street right-of-way – Jim Satlak

CITY OF JOPLIN
COUNCIL AGENDA ITEM

ITEM:
CB 2021-290-Street Vacation

MEETING DATE:
November 1, 2021

ORIGINATING DEPARTMENT:
Planning, Development and Neighborhood Services

REVIEWED BY:
Director of Planning, Development & Neighborhood Services-Troy Bolander, Director of Finance-Leslie Haase, City Attorney- Peter Edwards, City Manager- Nicholas Edwards.

SUMMARY REQUEST:
Case 057-21: Approximately 700 feet East of the intersection of E. 9th St. and S. Rex Ave. – A request to vacate street right-of-way – Jim Satlak

BACKGROUND:
This vacation is being sought for the consolidation of the site.

PLANNING & ZONING COMMISSION TESTIMONY:
Keegan Stanton, 602 S. Main Street, Joplin, MO. This is roughly the same property that came before you for rezoning, there is some 9th Street right-of-way up on the north side, which is unimproved. Orr Ave, which is now in Duquesne was originally platted abutting the East side of Mr. Satlak's property. He is requesting that both rights-of-way be vacated.

PUBLIC COMMENT:
None.

FUNDING SOURCE
These payments are included in the FY 2020-21 budget of the Community Planning Fund.

RECOMMENDATION:
Staff recommends approval of Case 057-21.
Planning & Zoning Commission recommends Case 057-32 for approval, 6 in favor, 0 Nays, 1 Absent.

ATTACHMENTS
CB 2021-290, Staff Planning Report, P&Z Commission Minutes

P & Z Case 057-21
Jim Satlak
(P & Z Recommended Approval)

COUNCIL BILL NO. 2021-290 ORDINANCE NO.

AN ORDINANCE providing to vacate approximately 700 feet East of the intersection of E. 9th Street and S. Rex Ave., City of Joplin, Jasper County, Missouri.

BE IT ORDAINED BY THE COUNCIL OF THE CITY OF JOPLIN, MISSOURI, as follows:

Section 1. That all that part of approximately700 feet East of the intersection of E. 9th Street and S. Rex Ave. City of Joplin, Jasper County, Missouri described as follows is hereby vacated, conveyed, relinquished, and reverted to the owners of the abutting lots and land:

As all that part of Orr Street being Twenty Feet (20') wide lying East of and contiguous to Lots 61 thru 64 inclusive, being bound on the North by the projection of the South line of Lot Numbered Sixty-five (65) and being bound by the projection of the South Line of Lot Numbered Sixty-one (61) in Oak Ridge Addition to the City of Joplin, Jasper County, Missouri, according to the recorded plat thereof. All that part of 9th Street being Forty Feet (40') wide lying North of and contiguous to Lot 64 in Oak Ridge Addition to the City of Joplin, Jasper County, Missouri, according to the recorded plat thereof.

PASSED BY THE COUNCIL OF THE CITY OF JOPLIN, MISSOURI, this _____ day of _____, 21, by a vote of _____.

_____
Ryan D. Stanley, Mayor

ATTEST:

_____
Barbara J. Gollhofer, City Clerk

APPROVED AS TO FORM:

_____
Peter C. Edwards, City Attorney

JOPLIN CITY COUNCIL
OCTOBER 18, 2021
MEETING MINUTES

CALL TO ORDER

The October 18, 2021 regular meeting of the Joplin City Council was called to order at 6:00 p.m. by Mayor Ryan Stanley.

INVOCATION was read by City Clerk Barbara Gollhofer.

PLEDGE OF ALLEGIANCE TO THE UNITED STATES OF AMERICA was led by Mr. Cortez.

ROLL CALL

Answering Roll Call were Council Members: Charles Copple, Keenan Cortez, Doug Lawson, Anthony Monteleone, Gary Shaw, Diane Reid Adams Mayor Ryan Stanley, Phil Stinnett, and Christina Williams. Also, in attendance were City Manager Nick Edwards and City Attorney Peter Edwards.

PRESENTATIONS

Proposition Action: Listening To You

Rob O'Brien, Co-Chair of the Citizens Use Tax Committee for Proposition Action discussed the committee's efforts to educate citizens on the proposed local use tax for the city that will be on the November 2 ballot. After his presentation, he asked the city council to consider forming another citizen committee to oversee the implementation of the action plans as promised if the use tax is approved by the voters.

Olivia Apartments Update

Sawyer Smith with Blue Haven Homes, LLC presented an update of the Olivia apartments and stated the roof is on and now they are working to remove damaged material from previous water damage. There are plenty of fans and generators drying out the basement so that the foundation and floorboards can be saved. The project is still on target for completion in March 2023. Persons interested in following this project can follow Blue Haven Homes on Instagram.

Police Department CALEA accreditation award

Joplin Police Chief Sloan Rowland stated the CALEA (Commission on Law Enforcement Agencies) award is the gold standard in public safety. It was created in 1979 as a credentialing authority through the join efforts of law enforcement's major executive associations. The award is given to law enforcement agencies that demonstrate compliance with an established set of professional standards on a voluntary basis, and includes an external, objective evaluation of departmental operations. This is the fifth time the JPD was recognized for this award.

FINALIZATION OF CONSENT AGENDA

There being no further business to come the Council, the Consent Agenda was finalized.

REPORTS AND COMMUNICATION

Health Dept. Update

Health Director Ryan Talken stated there was an increase in positive Covid cases since his last report – 50 active cases vs. 29. There was a slight decrease in hospitalizations and of the 29 patients, only 1 is a Joplin resident. For information on Covid testing and vaccination clinics, call the Health Dept. at 417-623-6122.

News from Public Information Officer, Lynn Onstot

The City will host a Public Open House highlighting the City's Active Transportation Assessment this Thursday, October 21 at the Joplin Senior Center, 2717 Picher Avenue. This come and go open house will be held from 5 p.m. to 7 p.m. City staff, along with partners from Olsson, will present data, maps, and recommendations based on the analysis. This is the second public open house for this project and gives citizens a chance to review and provide input on the efforts thus far, along with the preliminary bicycle network.

Since the pioneer days of the American Midwest, quilts have been a cornerstone of Missouri culture, fashion, and tradition. In honor of our Missouri's 200 years of statehood, a Missouri Bicentennial Quilt has been created. Using one quilt block for each Missouri county and the independent City of St. Louis, the quilt reflects the unique characteristics of Missouri culture, region, and style. The Missouri Bicentennial Quilt will be on display on the First Floor of Joplin City Hall, Wednesday, October 27 and Thursday, October 28, during normal business hours of 8 a.m. to 5 p.m. This historical Quilt is traveling through the state during the bicentennial year of 2021 and Joplin is proud to have it in our City Hall. If someone is unable to come and see the quilt, the Missouri 2021 team has developed a digital exhibition for viewing at Missouri2021.org

This project was developed by the State Historical Society of Missouri, and Missouri Star Quilt Company, in partnership with the Missouri State Quilters Guild. Downtown Joplin Alliance and area sponsors welcome the community to Main Street for the final Third Thursday event of the 2021 season! Scheduled for this Thursday, October 21st, this event will offer some fun attractions along with a Zumba Party, live music, delicious food, vintage car show, and an artisan market. Pumpkin painting, ghost tours, and homemade pinata making will also be part of the fun!

For more information about these events and programs or other City news, please visit our website at joplinmo.org

CITIZEN REQUESTS AND PETITIOS

Amber McCormick spoke on a TNR (Trap-Neuter-Release) program to get the feral cat population under control. She asked the city council to consider changing some ordinances to help resolve this issue. City Manager Edwards was asked by Council to have the Health Dept. explore other cities' best practices on this issue.

PUBLIC HEARINGS

CONSENT AGENDA

Motion by Mr. Shaw, second by Mr. Cortez to approve the Consent Agenda**.** Voting in favor were Council Members: Copple, Cortez, Lawson, Monteleone, Reid Adams, Shaw, Stanley, Stinnett, and Williams, 9. Nays: 0.

Minutes of the October 4, 2021 City Council Meeting

COUNCIL BILL NO. 2021-150 - an ordinance approving an Agreement with Southern Star Central Gas Pipeline, Inc. in the amount of Four Hundred Thirty-One Thousand Nine Hundred Seventy-Six and 00/100 dollars ($431,976.00) for facility relocations required for the 32nd St. Widening project from Schifferdecker Ave. to Central City Rd. and authorizing the City Manager or his designee to execute the same by and on behalf of the City of Joplin. **Ordinance No. 2021-136**

COUNCIL BILL NO. 2021-283 - an ordinance providing the vacation of a street right-of-way lying on property E. 11th St. between S. Rex Ave. and S. Peters Ave., City of Joplin, Jasper County, Missouri. **Ordinance No. 2021-137**

COUNCIL BILL NO. 2021-284 - an ordinance amending Ordinance No. 2004-256, passed by the Council of the City of Joplin, Missouri, November 15, 2004, by removing from District R-1 (Single Family Residential) and including in District R-2 (Two Family Residential) property as described below and located at 3329 S. Jackson Ave. **Ordinance No. 2021-138**

COUNCIL BILL NO. 2021-285 - an ordinance establishing grades and accepting the Final Plat of Abernathy Subdivision located at the Southwest Corner of W. 22nd St. and S. Schifferdecker Ave. in the City of Joplin, Jasper County, Missouri. **Ordinance No. 2021-139**

COUNCIL BILL NO. 2021-286 - an ordinance authorizing the City to enter into an Encroachment Agreement by and between the City of Joplin and Jeffery Neal, authorizing the Public Works Director, or his designee, to execute said Agreement by and on behalf of the City. **Ordinance No. 2021-140**

COUNCIL BILL NO. 2021-405 - an ordinance approving an Agreement between the City of Joplin, Missouri, and Missouri Highway and Transportation Commission which will provide FHWA Metropolitan Planning Assistance and FTA Section 5303 assistance, hereafter known as Consolidated Planning Funds, from November 1, 2021, through October 31, 2022, in accordance with the rules of the U.S. Department of Transportation, Federal Transit Administration (FTA) and Federal Highway Administration (FHWA) under 49 U.S.C. Section 5303 and 23 U.S. Code Sections 104(F) and 134 to conduct comprehensive and transportation planning programs, as the City of Joplin has been designated to conduct transportation planning programs for the Joplin Area Transportation Study Organization; authorizing the City Manager or his designee to execute said Agreement for the City. **Ordinance No. 2021-141**

RESOLUTIONS

ORDINANCES – EMERGENCY

COUNCIL BILL NO. 2021-163

Mr. Lawson introduced Council Bill No. 2021-163 - an ordinance approving a Purchase Order be issued to VAC-CON, Inc. in the amount of Four Hundred Forty-Nine Thousand Two Hundred Fifty and 00/100 Dollars ($449,250.00) for the purchase of a Vactor Truck; and containing an emergency clause. Motion by Mr. Lawson, second by Mr. Copple that Council Bill No. 2021-163 be passed on an emergency basis. Voting in favor were Council Members: Copple, Cortez, Lawson, Monteleone, Reid Adams, Shaw, Stanley, Stinnett, and Williams, 9. Nays: 0. Council Bill No. 2021-163 was declared adopted and entitled **Ordinance No. 2021-142**

COUNCIL BILL NO. 2021-165

Mr. Stinnett introduced Council Bill No. 2021-165 - an ordinance approving a purchase order for One Hundred Four Thousand, Eight Hundred Seventeen and 70/100 Dollars ($104,817.70) with Ace Pipe Cleaning, Inc., for the 2021-2023 Evaluation and Rehabilitation Toolbox for Wastewater Collection System Project; authorizing the City Manager or his designee to execute the same by and on behalf of the City of Joplin and containing an emergency clause. Motion by Mr. Stinnett, second by Dr. Reid Adams that Council Bill No. 2021-165 be passed on an emergency basis. Voting in favor were Council Members: Copple, Cortez, Lawson, Monteleone, Reid Adams,

Shaw, Stanley, Stinnett, and Williams, 9. Nays: 0. Council Bill No. 2021-165 was declared adopted and entitled **Ordinance No. 2021-143**

COUNCIL BILL NO. 2021-407

Mr. Monteleone introduced Council Bill No. 2021-407 - an ordinance authorizing the City of Joplin to execute the second amendment to Work Authorization #7 to the Master Services Agreement for Professional Administrative Consulting Services with Guidehouse LLC (GH) formerly known as PricewaterhouseCoopers Public Sector LLP (PwC) to provide final implementation and administrative activities, not to exceed Fifty Thousand Dollars ($50,000) and authorizing the City Manager or his designee to execute said Amendment; and containing an emergency clause. Motion by Mr. Monteleone, second by Mr. Lawson that Council Bill No. 2021-407 be passed on an emergency basis. Voting in favor were Council Members: Copple, Cortez, Lawson, Monteleone, Reid Adams, Shaw, Stanley, Stinnett, and Williams, 9. Nays: 0. Council Bill No. 2021-407 was declared adopted and entitled **Ordinance No. 2021-144**

COUNCIL BILL NO. 2021-454

Mr. Copple introduced Council Bill No. 2021-454 – an ordinance approving an Agreement by and between the Joplin Humane Society, Inc., and the City of Joplin, Missouri, providing for animal sheltering services for the city animal control program, authorizing the City Manager to execute said Agreement by and on behalf of the City of Joplin, Missouri; and containing an emergency clause. Motion by Mr. Copple, second by Mr. Cortez that Council Bill No. 2021-454 be passed on an emergency basis. Voting in favor were Council Members: Copple, Cortez, Lawson, Monteleone, Reid Adams, Shaw, Stanley, Stinnett, and Williams, 9. Nays: 0. Council Bill No. 2021-454 was declared adopted and entitled **Ordinance No. 2021-145**

COUNCIL BILL NO. 2021-455

Mr. Stinnett introduced Council Bill No. 2021-455 – an ordinance amending Chapter 18, Animals, of the Joplin City Code by amending certain fees found in Section 18-144; and containing an emergency clause. Motion by Stinnett, second by Dr. Reid Adams that Council Bill No. 2021-455 be passed on an emergency basis. Voting in favor were Council Members: Copple, Cortez, Lawson, Monteleone, Reid Adams, Shaw, Stanley, Stinnett, and Williams, . Nays: 0. Council Bill No. 2021-455 was declared adopted and entitled **Ordinance No. 2021-146**

COUNCIL BILL NO. 2021-456

Dr. Reid Adams introduced Council Bill No. 2021-456 - an ordinance approving a Program Services Contract by and between the State of Missouri, Department of Health and Senior Services, and the City of Joplin, Missouri, for a term commencing October 1, 2021 and running through September 30, 2022, for the amount of up to Six Hundred Twenty Thousand, One Hundred Three Dollars and no cents ($620,103.00), to enable the Health Department to provide nutritional assistance and education to residents of Jasper County, authorizing the City Manager to execute the same by and on behalf of the City of Joplin, Missouri and containing an emergency clause. Motion by Dr. Reid Adams, second by Mr. Copple that Council Bill No. 2021-456 be passed on an emergency basis. Voting in favor were Council Members: Copple, Cortez, Lawson, Monteleone, Reid Adams, Shaw, Stanley, Stinnett, and Williams, 9. Nays: 0. Council Bill No. 2021-456 was declared adopted and entitled **Ordinance No. 2021-147**

COUNCIL BILL NO. 2021-522

Dr. Reid Adams introduced Council Bill No. 2021-522 - an ordinance amending the Annual Budget of the City of Joplin for the Fiscal Year 2020-2021 as adopted by Ordinance 2020-156 on October 19, 2020, to adjust appropriations and containing an emergency clause. Motion by

Dr. Reid Adams, second by Mr. Shaw that Council Bill No. 2021-522 be passed on an emergency basis. Voting in favor were Council Members: Copple, Cortez, Lawson, Monteleone, Reid Adams, Shaw, Stanley, Stinnett, and Williams, 9. Nays: 0. Council Bill No. 2021-522 was declared adopted and entitled **Ordinance No. 2021-148**

COUNCIL BILL NO. 2021-523

Mr. Shaw introduced Council Bill No. 2021-523 – an ordinance providing for the Budget of the City of Joplin for the period from November 1, 2021 to October 31, 2022, estimating the revenues for said period and appropriating for the purposes stated the sums set forth therein; and containing an emergency clause. Motion by Mr. Shaw, second by Mr. Lawson that Council Bill No. 2021-523 be passed on an emergency basis. Voting in favor were Council Members: Copple, Cortez, Lawson, Monteleone, Reid Adams, Shaw, Stanley, Stinnett, and Williams, 9. Nays: 0. Council Bill No. 2021-523 was declared adopted and entitled **Ordinance No. 2021-149**

COUNCIL BILL NO. 2021-524

Mr. Lawson introduced Council Bill No.2021-524–an ordinance providing for the Fire Department Budget of the City of Joplin for the period from November 1, 2021 to October 31, 2022, estimating the appropriations for said period for the purposes stated the sums set forth therein; and containing an emergency clause. Motion by Mr. Lawson, second by Mr. Cortez that Council Bill No. 2021-524 be passed on an emergency basis. Voting in favor were Council Members: Cortez, Lawson, Monteleone, Reid Adams, Shaw, Stanley, Stinnett, and Williams, 9. Nays: 0. Absent, 0. Abstention: Copple, 1. Council Bill No. 2021-524 was declared adopted and entitled **Ordinance No. 2021-150**

COUNCIL BILL NO. 2021-526

Mr. Cortez introduced Council Bill No. 2021-526 – an ordinance adopting a new step pay plan by reference the City Salary Administration Plan; establishing the annual salary of certain Classified and Unclassified positions and Part-Time/Seasonal positions for Fiscal Year 2021-022; and containing an emergency clause. Motion by Mr. Cortez, second by Mr. Monteleone that Council Bill No. 2021-526 be passed on an emergency basis. Voting in favor were Council Members: Copple, Cortez, Lawson, Monteleone, Reid Adams, Shaw, Stanley, Stinnett, and Williams, 9. Nays: 0. Council Bill No. 2021-526 was declared adopted and entitled Ordinance No. 2021-151

COUNCIL BILL NO. 2021-527

Mr. Cortez introduced Council Bill No. 2021-527 – an ordinance adopting a new step pay plan by reference the City Salary Administration Plan for the Fire Department; establishing the annual salary of certain Classified and Unclassified positions for Fiscal Year 2021-2022; and containing an emergency clause. Motion by Mr. Cortez, second by Mr. Lawson that Council Bill No. 2021-527 be passed on an emergency basis. Voting in favor were Council Members: Cortez, Lawson, Monteleone, Reid Adams, Shaw, Stanley, Stinnett, and Williams, 8. Nays: 0. Absent: 0. Abstention: Copple, 1. Council Bill No. 2021-527 was declared adopted and entitled **Ordinance No. 2021-152**

ORDINANCES – FIRST READING

COUNCIL BILL NO. 2021-003

Mr. Copple introduced Council Bill No. 2021-003 – an ordinance amending Chapter 114, "Traffic," by enacting a new Article XII, "Utility Vehicles." Motion by Mr. Copple, second by Dr. Reid Adams that Council Bill No. 2021-003 be passed on First Reading and advanced to Second and Third Reading. Voting in favor were Council Members: Copple, Cortez, Lawson,

Monteleone, Reid Adams, Shaw, Stanley, Stinnett, and Williams, 9. Nays: 0. The bill was read as **Council Bill No. 2021-003**

COUNCIL BILL NO. 2021-406

Mr. Cortez introduced Council Bill No. 2021-406 - an ordinance approving an Agreement between the City of Joplin, Missouri, and Owen & Eastlake Ltd.; authorizing the City Manager or his designee, Director of Planning, Development and Neighborhood Services, to execute same on behalf of the City. Motion by Mr. Cortez, second by Mr. Monteleone that Council Bill No. 2021-406 be passed on First Reading and advanced to Second and Third Reading. Voting in favor were Council Members: Copple, Cortez, Lawson, Monteleone, Reid Adams, Shaw, Stanley, Stinnett, and Williams, 9. Nays: 0. The bill was read as **Council Bill No. 2021-406**

ORDINANCES – SECOND READING AND THIRD READING

UNFINISHED BUSINESS

NEW BUSINESS

Confirm Boards & Commissions Appointments

Voting in favor to approve the following appointment were Council Members: Copple, Cortez, Lawson, Monteleone, Reid Adams, Shaw, Stanley, Stinnett, and Williams, 9. Nays: 0.

ADA: Camille Turner to fill the unexpired term of Kayla McCollum. Term expires 6/1/22

Other Business

Mr. Lawson asked for further discussion on a citizens committee to oversee the collection and implementation of the revenues collected from the use tax to ensure the revenues are directed toward meeting the goals of the action plans. After the discussion, Mr. Shaw made a motion, with a second by Mr. Lawson, to instruct the city manager to reach out to the current use tax committee members to ask if anyone is willing to serve on a new use tax oversight committee commencing when tax revenues are being collected. This will be for a three-year term, and meet quarterly, and report back to the City Council at reasonable times to give updates on their progress. Voting in favor were Council Members: Copple, Cortez, Lawson, Monteleone, Reid Adams, Shaw, Stanley, Stinnett, and Williams., 9. Nays: 0.

Closed Session

Vote to go into closed session, which shall pertain to the hiring, firing, disciplining, or promotion of an employee or particular employees of a governmental body involving personal information more specifically for the purpose of evaluating certain Council employees; as set forth in Section 610.021(3) RSMo, as amended, 2020. This meeting, record, and vote to be closed to the extent provided by law. The City Council shall adjourn at the end of the session. Motion by Mr. Shaw, second by Mr. Cortez to go into closed session. Voting in favor were Council Members: Copple, Cortez, Lawson, Monteleone, Reid Adams, Shaw, Stanley, Stinnett, and Williams, 9.

There being no further business, the meeting was adjourned at 7:53 p.m.

Respectfully,

Barbara Gollhofer, City Clerk, MPCC

JOPLIN CITY COUNCIL
SPECIAL MEETING MINUTES
OCTOBER 26, 2021

CALL TO ORDER
The Special Meeting of the Joplin City Council was called to order at 2:45 p.m. by Mayor Ryan Stanley.

READING OF THE SPECIAL CALL was read by City Clerk Barbara Gollhofer:
Notice is hereby given that the City Council of the City of Joplin, Missouri, will conduct a Special Closed Meeting at 2:45 p.m. on Tuesday, October 26, 2021, at Joplin City Hall, 2nd Floor Conference Room, 602 S. Main Street for the purpose of interviewing candidates for the city clerk position.

ROLL CALL
Answering Roll Call were Council Members: Charles Copple, Keenan Cortez, Doug Lawson, Anthony Monteleone, Gary Shaw, Ryan Stanley, and Phil Stinnett. Absent: Diane Reid Adams, Christina Williams. Also, in attendance was City Attorney Peter Edwards and HR Director Michelle Ducre.

Motion by Mr. Monteleone, second by Mr. Cortez to excuse Dr. Reid Adams and Ms. Williams. Voting in favor were Council Members: Copple, Cortez, Lawson, Monteleone, Shaw, Stanley, and Stinnett, 7. Nays: 0. Absent: Reid Adams, Williams, 2.

Vote to go into closed session, which shall pertain to the hiring, firing, disciplining, or promotion of an employee or particular employees of a governmental body involving personal information as set forth in Section 610.021(3) RS Mo, as amended, 2020. This meeting, record, and vote to be closed to the extent provided by law. The City Council shall adjourn at the end of the session. Motion by Mr. Cortez, second by Mr. Shaw to go into closed session. Voting in favor were Council Members: Copple, Cortez, Lawson, Monteleone, Shaw, Stanley, and Stinnett, 7. Nays: 0. Absent: Reid Adams, Williams, 2.

The meeting adjourned to closed session at 2:50 p.m.

Respectfully,

Barbara J. Gollhofer, City Clerk

CITY OF JOPLIN
COUNCIL AGENDA ITEM

ITEM
Council Bill 2021-003: AN ORDINANCE amending Chapter 114, "Traffic," by enacting a new Article XII, "Utility Vehicles."

MEETING DATE
October 18, 2021

ORIGINATING DEPT
Legal

ATTACHMENTS
Council Bill 2021-003

REVIEWED BY
City Attorney: Peter Edwards; Finance Director Leslie Haase; City Manager: Nicholas Edwards.

SUMMARY
This Council Bill amends Chapter 114, "Traffic," by enacting a new Article XII, "Utility Vehicles."

BACKGROUND
Chapter 304, RSMo., allows cities to regulate the operation of utility vehicles on city streets. The requirements of a new Article XII, "Utility Vehicles," are summarized as follows. On an annual basis, the vehicle must be registered with the City and the owner must pay $25 in fees. The driver must obey all traffic laws and local ordinances regarding the rules of the road. The driver must have a driver's license, insurance, and be 18 years of age or older. The vehicle may only be operated on streets with a speed limit of forty-five (45) miles per hour or less. The vehicle must have seatbelts, turn signals, headlamps, tail lamps, stop lamps, reflex reflectors, and mirrors. This ordinance does not allow the operation of Go Carts, Golf Carts, or All-Terrain Vehicles/ATVs on the streets.

FUNDING SOURCE
N/A

RECOMMENDATION
Staff recommends adoption of this Council Bill on first reading.

COUNCIL BILL NO. 2021-003 ORDINANCE NO.

AN ORDINANCE amending Chapter 114, "Traffic," by enacting a new Article XII, "Utility Vehicles."

NOW, THEREFORE, BE IT ORDAINED BY THE COUNCIL OF THE CITY OF JOPLIN, MISSOURI, as follows:

Section 1. That Chapter 114, "Traffic," is amended by enacting a new Article XII, "Utility Vehicles," as follows:

"ARTICLE XII. - UTILITY VEHICLES

114-781. - Utility vehicles, operation on highway or streets and in streams or rivers prohibited — exceptions — passengers prohibited.

(a) No person shall operate a utility vehicle, defined as "any motorized vehicle manufactured and used exclusively for off-highway use which is more than fifty inches but no more than eighty inches in width, measured from outside of tire rim to outside of tire rim, with an unladen dry weight of three thousand five hundred pounds or less, traveling on four or six wheels, to be used primarily for landscaping, lawn care, or maintenance purposes", upon the highways of this state or streets of this City, except as follows:

(1) Utility vehicles owned and operated by a governmental entity for official use;

(2) Utility vehicles operated for agricultural purposes or industrial on-premises purposes between the official sunrise and sunset on the day of operation, unless equipped with proper lighting;

(3) Utility vehicles operated by handicapped persons for short distances occasionally only on the state's secondary roads when operated between the hours of sunrise and sunset; and

(4) Utility vehicles operated in accordance with Section 114-782.

(b) No person shall operate a utility vehicle within any stream or river in this state, except that utility vehicles may be operated within waterways which flow within the boundaries of land which a utility vehicle operator owns, or for agricultural purposes within the boundaries of land which a utility vehicle operator owns or has permission to be upon, or for the purpose of fording such stream or river of this state at such road crossings as are customary or part of the highway system. All law enforcement officials or peace officers of this state and its political subdivisions or department of conservation agents or department of natural resources park rangers shall enforce the provisions of this subsection within the geographic area of their jurisdiction.

(c) A person operating a utility vehicle on a highway pursuant to an exception covered in this section shall have a valid operator's or chauffeur's license, except that a handicapped person operating such vehicle under subdivision (3) of subsection (a) of this section, but shall not be

required to have passed an examination for the operation of a motorcycle, and the vehicle shall be operated at speeds of less than forty-five miles per hour.

(d) No person shall operate a utility vehicle:

(1) In any careless way so as to endanger the person or property of another; or

(2) While under the influence of alcohol or any controlled substance.

(e) No operator of a utility vehicle shall carry a passenger, except for agricultural purposes. The provisions of this subsection shall not apply to any utility vehicle in which the seat of such vehicle is designed to carry more than one person.

Section 114-782. - Operation on streets, permitted when.

(a) A utility vehicle may be operated upon the streets, but not State or Federal highways. Except as otherwise specified in this Article, every person operating a utility vehicle shall be granted all the rights and shall be subject to all the duties applicable to the driver of any other motor vehicle.

(b) The operator of a utility vehicle shall observe all traffic laws and local ordinances regarding the rules of the road. A utility vehicle may be operated on the streets with posted speeds of forty-five (45) miles per hour or less. The provisions of this Subsection shall not prohibit a utility vehicle from crossing a street with a posted speed limit of up to forty-five (45) miles per hour at an intersection.

(c) Each person operating a utility vehicle on the streets shall possess a valid driver's license issued pursuant to Chapter 302, RSMo. and be 18 years of age or older.

(d) Every operator of a utility vehicle shall maintain financial responsibility on such utility vehicle as required by Chapter 303, RSMo. if the utility vehicle is to be operated upon the streets.

(e) Unless the utility vehicle is designed and equipped to do so, there can be no passengers riding on said vehicle. If so equipped, the following shall apply:

(1) Children less than 4 years old or less than 40 pounds must be in an appropriate child safety seat. (Section 307.179, RSMo.);

(2) Children ages 4 through 7 who weigh at least 40 pounds must be in an appropriate child safety seat or booster seat unless they are 80 pounds or 4'9" tall. (Section 307.179, RSMo.);

(3) Children 8 and over or weighing at least 80 pounds or at least 4'9" tall are required to be secured by a safety belt or buckled into an appropriate booster seat. (Section 307.179, RSMo.);

(4) All passengers, under the age of 18, must wear an approved Department of Transportation helmet while riding; and

(5) No utility vehicle shall be operated with more occupants than the number for which it is designed and equipped.

(f) A utility vehicle must have seatbelts in good working condition. The number of passengers on a utility vehicle shall not exceed the number of operating seatbelts.

(g) The operation of Go Carts, Golf Carts, and All Terrain Vehicles/ATVs is prohibited on the streets.

Section 114-783. - Application for and proof of registration of utility vehicles.

(a) Utility vehicles operating on the public streets shall be registered.

(1) Each application for registration shall include basic identifying information for the utility vehicle (make, model, color, and such other identifying information as the City deems advisable); the name and address of the owner of the utility vehicle; and a copy of proof of financial responsibility. Registration and operation of utility vehicles shall be restricted to residents of the City. Registration must be renewed annually.

(2) A proof of registration issued by the City in the form of a receipt for registration and an identification sticker shall constitute all permits required from the City. The proof of registration shall be kept in the utility vehicle at all times of operation on a street, and the current registration sticker shall be conspicuously displayed on the rear exterior of the utility vehicle.

(3) The City may charge registration fees as follows: fifteen dollars ($15) for each one-year utility vehicle registration plus ten dollars ($10) for a processing fee.

(4) A utility vehicle must meet the following requirements and the registrant must sign and certify that such requirements have been met and are fully functional and operational: the brakes; the parking brake (if equipped); the steering column; the utility vehicle has not less than four (4) wheels; there is not less than two thirty-seconds (2/32) inch of tread depth remaining on each tire, there are no visible tire threads or cords showing and there is no visible rubber separation; and all items listed in Section 114-784.

Section 114-784. - Equipment Required on Utility Vehicles.

(a) Utility vehicles operated on the streets shall be manufactured and equipped in accordance with the requirements of Section 304.029, RSMo., and, in any case, will minimally be equipped with the following:

(1) Turn Signals;

(2) Headlamps;

(3) Tail lamps;

(4) Stop lamps;

(5) Reflex reflectors: one red on each side as far to the rear as practicable, and one red on the rear; and

(6) An exterior mirror mounted on the driver's side of the vehicle and either an exterior mirror mounted on the passenger's side of the vehicle or an interior mirror.

Section 114-785. - Penalty.

(a) In addition to revocation of the permit issued under this Article, any person violating any of the provisions of this Article shall be subject to the penalties set forth in section 1-5.

PASSED BY THE COUNCIL OF THE CITY OF JOPLIN, MISSOURI, this _____ day of _____, 2021, by a vote of_____.

_____
Ryan D. Stanley, Mayor

ATTEST:

_____
Barbara J. Gollhofer, City Clerk

APPROVED AS TO FORM:

_____
Peter C. Edwards, City Attorney

CITY OF JOPLIN
COUNCIL AGENDA ITEM

ITEM
Council Bill 2021-406 – approving agreement for professional services for the Broadway District National Register Nomination with Owen & Eastlake Ltd.

MEETING DATE
October 18, 2021

REVIEWED BY
Planning, Development & Neighborhood Services Director: Troy Bolander; Public Works Director: David Hertzberg; Finance Director: Leslie Haase; City Attorney: Peter Edwards; City Manager: Nicholas Edwards.

SUMMARY
This Council Bill approves agreement for professional services between the City of Joplin and Owen & Eastlake Ltd. Scope of work includes a district nomination to the National Register of Historic Places.

BACKGROUND
The Joplin Historic Preservation Commission, in continuation of the responsibility of the Commission to identify and protect the historic and cultural resources of the City, is nominating the Broadway District to the National Register. This district is an important part of the City Preservation Plan and the long-range neighborhood plans of the Community Development Office.

FUNDING SOURCE
These payments are included in the FY 2021 budget of the Historic Preservation Commission budget for consultants and will be reimbursed 60% by the Department of Natural Resources Historic Preservation Fund.

RECOMMENDATION
The Historic Preservation Commission and staff recommends adoption of this Council Bill on a non-emergency basis.

ATTACHMENTS
CB2021-406, Map of District, Owen & Eastlake Ltd. Agreement

HISTORIC JOPLIN PRESERVATION COMMISSION

602 S Main Street, Joplin, MO 64801 (417)624-0820

Consultant Selection Committee
Broadway District Nomination
Results and Recommendation
10/09/2021

Cost reasonableness estimate: $20,000.00
Owen & Eastlake Ltd., Cost not to exceed: $19,500.00

Request for Proposals was written in accordance with City of Joplin and the Missouri State Historic Preservation Office procurement policies and approved by the State Historic Preservation Funds Grants manager on August 18th, 2021. The RFP was advertised in the local publication of record, The Joplin Globe, and emailed directly to the comprehensive list of 36 CFR Qualified Professionals lists on record for the State Historic Preservation Offices for Missouri, Arkansas and Oklahoma, approximately 40 firms.

Responsiveness to the RFP was low with only Owen & Eastlake Ltd. responding.

Staff to the Joplin Historic Preservation Commission contacted firms to which the RFP was sent and inquired as to why a response was not submitted to the City. The summary of responses included: timeline was short due to late release of grant funding for project and the integrity of the district would require additional research in a short timeframe before nomination, available staff to prepare nomination are already engaged and the firm does not have the capacity for further nominations this year, and staff to prepare nomination have taken positions in state historic agencies and therefore the firm does not have any staff to prepare nomination and for these reasons the firms declined to submit proposal.

Owen & Eastlake Ltd. submitted proposal within the deadline of the RFP and the proposal was deemed responsive to the requirements of the RFP. Consultant selection committee was assembled of two City Staff and two Commission Members, and evaluation unanimously determined the consultant qualified based on the criteria as outlined in the RFP.

Staff to the Commission contacted the principle of Owen & Eastlake Ltd., Rory Krupp, to discuss the proposal as well as address concerns about the timeline and integrity of the proposed district which another firm stated as a reason to decline submitting proposal. Mr. Krupp stated that his firm has specialized in preparation of National Historic Register Nominations in neighborhoods that have low integrity due to disinvestment. The submitted work samples of successful nominations submitted in the response packet are consistent in documenting this experience of the firm. References verified the firm completed work for them on time and budget.

AGREEMENT
FOR PROFESSIONAL CONSULTING SERVICES

THIS AGREEMENT, by and between the City of Joplin, Missouri, whose address is 602 S. Main St., Joplin, Missouri 64801, hereinafter referred to as the "City" and Owen & Eastlake Ltd., whose address is P.O. Box 10774, Columbus, Ohio 43201, hereinafter referred to as the "Consultant" is for professional services.

WHEREAS, the City desires to retain a professional consulting firm for the Broadway District National Register Nomination;

WHEREAS, the City issued its Request for Proposals for Broadway District National Register Nomination, attached hereto and incorporated by reference as Exhibit A;

WHEREAS, Consultant submitted its bid response, attached hereto and incorporated by reference as Exhibit B; and

WHEREAS, Consultant desires to provide professional services for Broadway District National Register Nomination pursuant to the terms of this Agreement;

NOW THEREFORE WITNESSETH: That for and in consideration of the mutual covenants and promises between the parties hetero, the parties do hereby agree as follows:

ARTICLE I – SERVICES

The Consultant agrees to diligently perform in a professional manner the following:

1. To provide services in completing the National Register Registration form and all other materials necessary to nominate the distict; the consultant is also responsible for completing additional research, documentation, and revisions as necessary. Final criteria and areas of significance will be determined in consultation with the State Historic Preservation Office. The nomination will be prepared in accordance with the instructions contained in National Register Bulletin 16A: How to Complete the National Register Registration Form. In addition, the nomination form will meet the standards outlined in the Missouri State Historic Preservation Office's *The Missouri Guide to the National Register Process* (*MO NR Guide*).

2. Submission nomination materials to the SHPO by deadlines that correspond to the July 2022 Missouri Advisory Council on Historic Preservation (MOACHP) meeting. The consultant shall also submit a revision and a post-MOACHP final copy of the nomination by designated deadlines

3. Prior to the initial submission the consultant shall submit a draft Section 8 Summary for review.

4. Submission materials for the initial submission and any revisions will be submitted in one packet and will include the following products:

a) A complete National Register of Historic Places Registration form prepared in accordance with National Register Bulletin 16A: How to Complete the National Register Registration Form and the *MO NR Guide*. The nomination shall be submitted on disc in Microsoft Word 2010 or Microsoft Word 2010-readable format. A .pdf of the form is not acceptable. It is not acceptable to email the form. The nomination must be substantially complete for the initial submission as outlined in the *MO NR Guide.*

b) Digital color photographs provided in TIFF format and properly labeled according to National Park Service standards. Each digital image must be at least 1600 X 1200 pixels and at least 300 dpi. All images must be burned to a disc. Photos must be recent, being no older than 12 months by the time they are submitted to the National Park Service.

c) Property owner information shall be submitted in accordance with the guidance outlined in the *MO NR Guide*.

ARTICLE II – AGREEMENT SCOPE AND TIME

The scope of work must be completed by the end of August 2022. Milestones were determined in consultation between the City and SHPO.

Consultant submits draft of Section 8 Summary to the National Register Section of the State Historic Preservation Office for review and approval. Email submission of documentation for the first of two-public information meetings to the HPF Grant Manager.	2/1/2022
Consultant submits substantially complete draft nomination in 2010 Word format, TIF images in color to the National Register Section of the State Historic Preservation Office. Mid-term budget report due to HPF Grant Manager.	4/1/2022
Consultant submits revised nomination and any revised materials incorporating SHPO staff comments on disc, and owner information to the National Register Section of the State Historic Preservation Office for review and approval.	5/16/2022
Submits documentation from the second public information meeting to the HPF Grant Manager for review and approval.	6/30/2022
Consultant presents nomination to the Missouri Advisory Council on Historic Preservation.	7/15/2022

Consultant submits final revisions, incorporating SHPO and MOACHP comments, on disc to the National Register Section of the State Historic Preservation Office for review and approval.	8/15/2022
Final fiscal report submitted to the HPF Grant Manager.	8/31/2022

It is acknowledged by the Parties that the adherence to this timetable is due not only to the performance of the Consultant, but also upon the timely review of draft materials and their return to the Consultant for any necessary editing.

ARTICLE III – GENERAL CONDITIONS

1. The Consultant shall observe and comply with all Federal, State and local laws and ordinances that affect those employed or engaged by it on the project, or the material or equipment used, or the conduct of the work, and shall procure all necessary licenses, permits and insurance, including but not limited to those contained in Exhibit "B."

2. The Consultant shall complete the work in a diligent manner.

3. This Agreement, including payment hereunder, shall not be sub-let, assigned or otherwise disposed of, except with the prior written consent of the City.

4. The Consultant warrants that it has not employed or retained any company or person, other than a bona fide employee working solely for the Consultant, to solicit or secure this Agreement and that it has not paid or agreed to pay any company or person, other than a bona fide employee working closely for the Consultant, any fee, commission, gift or contingent fee.

5. In performance of the work covered by this Agreement, the Consultant shall not discriminate against any worker because of race, creed, color, political affiliation, handicap or national origin.

6. Possession of working papers, projection reports, drawings, specification and other materials produced in connection with this Agreement shall be retained by the City for use only in the rehabilitation and preservation of those subject properties.

7. City shall have the right to make changes within the general scope of Consultant's services, with an appropriate change in compensation, upon execution of a mutually acceptable amendment or change order signed by an authorized representative of City and the President or Vice President of Consultant.

ARTICLE IV – RESPONSIBILITES

The Consultant shall:

1. Provide a staff that is experienced in performing the work described in this Agreement.

2. Deliver in a timely manner all services specified in this Agreement.

3. Maintain the confidentiality of any information designated as confidential by the City of Joplin.

4. Consultant will exercise reasonable skill, care and diligence in the performance of its services and will carry out its responsibilities in accordance with customarily accepted professional standards.

5. Consultant represents that it has professional working knowledge of National Register Bulletins and SHPO requirements.

The City shall:

1. Designate one (1) person as the Project Coordinator, to serve as a liaison between the City and the Consultant,

2. Ensure access to City facilities, personnel and information as requested by Consultant.

3. Provide all historic and current relevant information, data and photographs to Consultant.

ARTICLE V – COSTS AND PAYMENTS

1. It is agreed by the Parties that the foregoing Scope of Services will be performed for an amount not to exceed $19,500.00, including all professional time, travel, materials and supplies, expenses, etc., payable according to the following schedule:

   a. Initial Payment, $9,750.00, Submission of substantially complete draft nominations in 2010 Word format, TIF images in color to the National Register Section of the State Historic Preservation Office.

   b. Final Payment, $9,750.00, due following the final fiscal report submitted to the HPF Grant Manager.

2. No out-of-pocket expenses for travel, mileage, postage, printing, presentation materials, photography, and other related expenses will be reimbursed by the City.

ARTICLE VI – INDEMNIFICATION AND INSURANCE

1. The Consultant covenants and agrees to, and does hereby hold harmless and defend the City, its officers, agents and employees from and against any and all claims or suits for property loss or damage, and/or personal injury, including death, to any and all persons, or whatsoever kind

or character, whether real or asserted, arising out of Consultant's negligence in the performance of services under this Agreement.

ARTICLE VII – MISCELLANEOUS

1. CHOICE OF LAW and VENUE. This Agreement has been made, and its validity, performance and effect shall be determined, in accordance with the laws of the State of Missouri and venue for litigation between the parties shall be solely and exclusively in Jasper County, Missouri, or the United States District Court for the Western District of Missouri.

2. HEADINGS. The headings of paragraphs in this Agreement are for convenience only. The headings form no part of this Agreement and shall not affect its interpretation.

3. ENTIRE AGREEMENT. This Agreement (including any Exhibits) contains the entire understanding of the parties with respect to the subject matter hereof. It may not be altered or amended except by an agreement in writing signed by both parties.

4. WAIVER OR BREACH. Waiver of any provision of this Agreement or breach of this Agreement shall not thereafter be deemed to be a consent by the waiving party to any further waiver, modification or breach by the other party, whether new or continuing, of the same or any other covenant, condition or provision of this Agreement. Failure by one of the parties to this Agreement to assert its rights for any breach of this Agreement shall not be deemed a waiver of such rights. Should City be required to institute legal action to enforce any of its rights set forth in this Agreement, then City shall be entitled to reimbursement for all reasonable attorneys' fees and costs incurred as determined by the Court in any such cause of action.

5. SEVERABILITY. If any of the provisions of this Agreement shall be construed to be invalid or illegal, the legality or validity of the other provisions of this Agreement shall not be affected thereby. Any illegal or invalid provision of this Agreement shall be severable and any other provisions shall remain in full force and effect.

6. BINDING EFFECT. The provisions herein shall operate as a covenant running with the land and shall bind both parties hereunto and their respective successors and assigns.

7. REPRESENATIONS. The signatories hereto represent and warrant that they have read this Agreement, that they are fully authorized in the capacities shown, that they understand the terms of this Agreement, and that they are executing the same voluntarily and solely for the consideration described herein.

8. RIGHTS AND BENEFITS. Consultant's services will be performed solely for the benefit of the City and not for the benefit or any other persons or entities.

ARTICLE IX – AGREEMENT

1. This Agreement contains the complete and full understanding of the parties; it may be varied only by written amendment executed by both parties.

IN WITNESS WHEREOF, the parties hereto have executed this Agreement as of the date shown below.

FOR THE CONSULTANT

Owen & Eastlake Ltd.

_____

BY: Rory Krupp
Principal

DATE:_____

FOR THE CITY

City of Joplin, Missouri

_____

BY: Troy Bolander
Director of Planning
Development & Neighborhood Services

DATE:_____

ATTEST: _____
Thomas Walters
Planner

STATE OF _____)
) ss.
COUNTY OF _____)

AFFIDAVIT OF COMPLIANCE
(Missouri Unauthorized Alien Workers Act)

My name is _____ _____(Name) and I am the __Title) of the _____(Company Name). I hereby represent, affirm and certify to the City of Joplin that my company does not knowingly employ any person who is an unauthorized alien in connection with contracted services with the City. I further affirm that my company is actively enrolled and participating in a federal work authorization program with respect to all employees working in connection with the contract services provided to the City.

_____
Affiant

IN WITNESS WHEREOF, I have hereunto subscribed my name and affixed my official seal this _____ day of _____, 20____.

_____
Notary Public

My commission expires:

_____

City of Joplin, Missouri

Request for Proposal

For

National Register Historic Places Nomination

For

The Broadway District

City of Joplin, MO

Planning, Zoning and Neighborhood Services

602 S. Main Street 64801

(417) 624-0820 Ext. 539

I. NOTICE OF REQUEST FOR PROPOSALS:

Invitation
Notice is hereby given that sealed proposals will be received before 5:00 p.m. CDT on September 20, 2021 at the Planning & Community Development Department at Joplin City Hall, 602 S. Main Street, Joplin, Missouri 64801 for the National Register Historic Places Nomination of The Broadway District.

Project Description
The City of Joplin, Missouri is seeking written proposals from historians or architectural historians that meet the qualifications outlined in 36 CFR 61 to complete a National Register of Historic Places nomination application for the Broadway District. The document will be based upon the 2018 Phase I East Town (original Joplin) Historic Resources Survey and the 2020 Phase II East Town (Original Joplin) Historic Resources Survey. Final criteria and areas of significance will be determined in consultation with the State Historic Preservation Office.

The proposed Broadway District is generally located in the 500 through 800 blocks between Broadway Avenue and Hill Street in the neighborhood of East Town (Exhibit 1). Part of the proposed district includes the original Joplin plat recorded on July 28, 1871. Broadway Boulevard was an early commercial corridor and the surrounding neighborhood traditionally modest in size, scale and ornament. Beginning in the 1920s, the neighborhood began a demographic shift with African American families increasing significantly. While today East Town neighborhood is ethnically diverse, the neighborhood has a significant association with the African American community and local history.

RFP Timeline

Name of the Proposal:	National Register Historic Nomination: The Broadway District
Date of Issuance:	August 28, 2021
Deadline for Proposal Submittal:	September 20, 2021 before 5:00 p.m. CDT
Submit Proposal to:	City of Joplin Sealed Proposal: National Register Historic Nomination – The Broadway District Planning & Community Development Department 602 S. Main Street Joplin, MO 64801
Point of Contact:	Thomas Walters, Planner, Planning, Development and Neighborhood Services

Email: twalters@joplinmo.org
Phone: (417) 624-0820 Ext. 539
Fax: (417) 625-4738

Respondents shall restrict all contact with the City and direct all questions regarding this RFP, including questions regarding terms and conditions and technical specifications, to the Point of Contact.

II. FORMAT FOR STATEMENT OF QUALIFICATIONS:

General Instructions
Qualifications shall be prepared simply and economically, providing a straightforward, concise description of the Respondent's ability to meet the requirements of this RFP. Emphasis shall be on the quality, completeness, clarity of content, responsiveness to the requirements, and an understanding of the City's needs.

Responses shall be a maximum of twenty (20) printed pages. The cover, table of contents, divider sheets, work examples, and Submission Form do not count as printed pages. Respondents shall carefully read the information contained in this RFP and submit a complete response to all requirements and questions as directed. Incomplete qualifications will be considered non-responsive and subject to rejection. Responses and any other information submitted by Respondents in response to this RFP shall become the property of the City.

The City will not compensate Respondents for any expenses incurred in Response preparation or for any presentation that may be made, unless agreed to in writing in advance or required by law. Respondents submit the Responses at their own risk and expense.

Responses that are qualified with conditional clauses, alterations, items not called for in the RFP documents, or irregularities of any kind are subject to rejection by the City, at its option.

The City makes no representations of any kind that an award will be made as a result of this RFP or subsequent interview or recommendation. The City reserves the right to accept or reject any or all Responses, waive any formalities or minor technical inconsistencies, or delete any item/requirements from this RFP when deemed to be in the City's best interest.

Responses shall consist of answers to the questions asked in the RFP. It is not necessary to repeat the question in the Responses; however, it is essential to reference the question number with the corresponding answer.

Failure to comply with requirements contained in this RFP may result in the rejection of the Responses.

III. SUBMITTAL INSTRUCTIONS:

Proposal
In order to facilitate the analysis of responses to this RFP, Consultants are required to prepare their proposals in accordance with the instructions outlined in this section. Consultants whose proposals deviate from these instructions may be considered non responsive and may be disqualified at the discretion of the City of Joplin.

Proposals shall be prepared as simply as possible and provide a straightforward, concise description of the Consultant's capabilities to satisfy the requirements of the RFP. Expensive bindings, color displays, promotional materials, etc., are not necessary or desired. Emphasis shall be concentrated on accuracy, completeness, and clarity of content.

A. Each of the seven (7) sections listed below shall be tabbed and labeled.
B. Each page shall be numbered on the bottom right hand corner.
C. Submit one (1) original proposal and five (5) copies.
D. The proposal shall be organized as follows:

Proposed Tab Section	Title
1.0	Cover Letter
2.0	Executive Summary
3.0	Company Background
4.0	Company Experience
5.0	Responses to Scope of Services
6.0	Sample Document(s)
7.0	Signature Page Form

Submittal Requirements
The proposals will be based on the criteria introduced in the above section and must include the following components:

1.0 Cover Letter: A maximum one page letter stating the Respondent's interest in being considered for this project.
2.0 Executive Summary: A maximum three page summary of the Respondent's ability to complete this project based on background and experience.
3.0 Company Background: An introduction to the Respondent's background, including number of years active in company and field, education, and number and type of projects completed for all personnel that will be assigned to this project.
4.0 Company Experience: A list of projects the Respondent has completed within the past five (5) years that are similar to the project requested in this RFP. Special attention should be given to projects completed for other governmental entities, particularly cities and State Historic Preservation Offices. Include company name, address, person(s) to contact, telephone number, a brief description of the project completed, and date completed for references.

5.0 Responses to Scope of Services (See Section IV. Specifications of Services Requested): Narrative on project approach. Describe the schedule of events necessary to complete the project clearly defining the roles of all involved personnel. Outline familiarity with the project and identify critical or unique issues specific to this project. Outline a communications process and explain unique approaches used elsewhere. Respondents should acknowledge the timeline and deadlines, the required final products, and required public meetings outlined in this RFP and their ability to complete these tasks on time. Respondents should include a cost summary, including the estimated hours and cost for each task and a total cost to complete the project.

6.0 Sample Document(s): The Respondent shall provide at least one (1) but not more than three (3) sample documents of similar projects completed.

7.0 Signature Page Form: See Attachment B at the end of this RFP. The form shall be signed and submitted with the Proposal.

IV. SPECIFICATIONS OF SERVICES REQUESTED:

General Statement

The City of Joplin is seeking a qualified consultant that meets the Secretary of Interior's Professional Qualifications Standards for historian or architectural historian as outlined in the Code of Federal Regulations, 36 CFR Part 61 to prepare and complete a National Register of Historic Places Nomination for The Broadway District. The nomination shall be based on the 1988 Joplin Architectural Survey, the 2018 Phase I East Town (original Joplin) Historic Resources Survey and the 2020 Phase II East Town (Original Joplin) Historic Resources Survey submitted to the State Historic Preservation Office (SHPO). The Consultant shall have significant experience in the preparation and completion of nominations to the National Register of Historic Places, and include at least one (1) but no more than three (3) example(s) of previous projects with their proposal.

The selected Consultant shall be expected to use accepted professional standards and practices to prepare and complete the project based on the following criteria:

Scope of Services – General

The qualified consulting firm will prepare and complete one (1) National Register of Historic Places Registration form and other materials necessary for the nomination of The Broadway District. Final criteria and areas of significance will be determined in consultation with the State Historic Preservation Office.

Survey recommendation for this commercial district and resources within include: Twenty-six of these resources are within a recommended commercial National Register Historic District centered on Broadway and within the Original Town plat. An additional fourteen resources would be included within the boundary of this proposed historic district but would be non-contributing due to age or lack of integrity. This potential historic district would be significant under Criterion A for Community Planning and Development as the original plat for the town of Joplin. This area developed as the commercial core of the

nascent town. Phase II of the survey may identify additional resources on the south side of Broadway that should be included in this potential historic district. The period of significance would begin in 1871 when the plat was filed. More research is needed to identify an appropriate end date to the period of significance.

The National Register nomination will be prepared in accordance with instructions contained in National Register Bulletin: How to Complete the National Register Registration Forms (#16A). In addition, the nomination form will meet the Missouri State Historic Preservation Office requirements associated with Grant Assisted Nominations such as milestones and documentation of public meetings.

All work related to this project will either be supervised or completed by personnel who meet 36 CFR 61, professional qualifications.

Funding for this project is made available through a grant **(Project Number 29-21-10029-005)** from the U.S. Department of the Interior/National Park Service, Historic Preservation Fund, through the Missouri Department of Natural Resources, Division of State Parks, State Historic Preservation Office. **All correspondence must include the Project Number as noted above.** Awarding of the consultant contract is contingent upon obligation of Federal Funds.

Scope of Services – Final Products

Prior to the initial submission of the nomination the consultant shall submit a draft Section 8 Summary for review.

Submission materials for the initial submission and revisions will be submitted in one packet and will include:

1) A complete National Register of Historic Places Registration Form prepared in accordance with National Register Bulletin 16A: How to Complete the National Register Registration Form and the *MO NR Guide*. The nomination shall be submitted on disc in Microsoft Word 2010 or Microsoft Word 2010-readable format. A .pdf of this form is not acceptable. It is not acceptable to email the form. The nomination must be substantially complete for the initial submission as outlined in the *MO NR Guide*.
2) Digital color photographs provided in TIFF format and properly labeled according to National Park Service standards. Each digital image must be at least 1600 X 1200 pixels and at least 300 dpi. All images must be burned to a disc. Photos must be recent, being no older than 12 months by the time they are submitted to the National Park Service.
3) Property owner information shall be submitted in accordance with the guidance outlined in the *MO NR Guide*.
4) Any other product(s) required or requested by the State Historic Preservation Office for successful completion of the nomination.

Scope of Services – Required Public Meetings

The consultant will conduct a minimum of two public meetings at Joplin City Hall, or location more appropriate for the district to be determined later, to inform the interested public about the goals and scope of the National Register nomination process as it relates to The Broadway District. Meetings will be held as near to the beginning of the nomination process as possible and at the conclusion of the preparation of the National Register nomination documents to present the nomination to the community (see attached timeline for proposed meeting dates). Meetings should be primarily informative in nature, but may also be used to solicit information from knowledgeable members of the public.

Public meeting notices regarding this grant project will include the following acknowledgement:

> *This material was produced with assistance from the Historic Preservation Fund, administered by the National Park Service, Department of the Interior and Missouri Department of natural Resources, State Historic Preservation Office. Any opinions, findings, and conclusions or recommendations expressed in this material are those of the author(s) and do not necessarily reflect the views of the Department of the Interior or the Department of natural Resources, State Historic Preservation Office. Federal laws prohibit discrimination on the grounds of race, color, sexual origination, national origin, disabilities, religion, age, or sex. For more information, write to the Office of Equal Opportunity, U.S. Department of the Interior, Washington D.C. 20240.*

Scope of Services – Timeline
All work must be completed no later than June 1, 2022.

Timeline for RFP Process: The timeline listed below is the City's estimation of time required to complete the RFP process. All efforts shall be made to abide by this schedule.

RFP Advertised:	August 28, 2021
Proposals Due:	September 20, 2021
Committee Review:	September 21 – 24, 2021

Timeline for project: The City and the State Historic Preservation Office have developed the following general timeline: The Project Product shall be submitted and payments made in accord with the proposed Milestone/Payment Schedule as follows:

Milestone	Due Date	Product	Payment Schedule
# 1	October 01, 2021	Email documentation of the consultant selection process and a draft of the consultant contract **prior to signature** to the HPF Grant Manager or their designee for review and approval.	$0
# 2	October 15, 2021	Email a copy of the signed consultant contract to the HPF	$0

		Grant Manager or their designee.	
# 3	November 15, 2021	Consultant submits draft of Section 8 Summary to the National Register Section of the State Historic Preservation Office for review and approval. Email submission of documentation for the first of two public information meetings to the HPF Grant Manager or their designee.	$0
# 4	January 10, 2022	Consultant submits substantially complete draft nomination in 2010 Word format, TIF images in color to the National Register Section of the State Historic Preservation Office. Mid-term budget report due to HPF Grant Manager or their designee.	Estimated 50% of expenses
# 5	February 14, 2022	Consultant submits revised nomination and any revised materials incorporating SHPO staff comments on disc, and owner information to the National Register Section of the State Historic Preservation Office for review and approval.	$0
# 6	April 1, 2022	Submits documentation from the second public information meeting to the HPF Grant Manager or their designee for review and approval.	$0
# 7	April 15,2022	Consultant presents nomination to the Missouri Advisory Council on Historic Preservation.	$0
# 8	May 16,2022	Consultant submits final revisions, incorporating SHPO and MOACHP comments, on disc to the National Register Section of the State Historic Preservation Office for review and approval.	$0
# 9	August 01, 2022	Final fiscal report submitted to the HPF Grant Manager or their designee.	Remaining balance of expenses

V. EVALUATION PROCEDURE AND FACTORS TO BE CONSIDERED IN THE EVALUATION PROCESS:

Qualifications of Proposers

The Proposer may be required before the award of any contract to show to the complete satisfaction of The City that it has the necessary facilities, ability, and financial resources to provide the services specified herein in a satisfactory manner. The Proposer may also be required to give a past history and references in order to satisfy The City in regard to the Proposer's qualifications. The City may make reasonable investigations deemed necessary and proper to determine the ability of the Proposer to perform the work, and the Proposer shall furnish to The City all information for this purpose that may be requested. The City reserves the right to reject any offer if the evidence submitted by, or investigation of, the Proposer fails to satisfy The City that the Proposer is properly qualified to carry out the obligations of the contract and to complete the work described therein. Evaluation of the Proposer's qualifications shall include:

A. Response must contain a cost for the requested scope of work in a "not to exceed" amount (50 Points);
B. The ability of the Proposers to perform the work or provide the service promptly or within the time specified, without delay or interference (10 points);
C. The character, integrity, reputation, judgment, experience, and efficiency of the Proposer (10 points), and;
D. The quality of performance of previous contracts or services (30 points).

A selection committee made up of qualified City staff and commissioners of the Historic Preservation Commission shall review and evaluate all responses. The selection committee will have only the response to the solicitation to review for selection of finalists. It is therefore important that respondents emphasize specific information pertinent to the work requested.

The proposals will be evaluated based on criteria above, scored and averaged by committee.

After the selection process, the Selection Committee shall negotiate on behalf of the City of Joplin, a contract based on the fees and fee structure as submitted in the proposal.

VI. GENERAL INFORMATION AND REQUIREMENTS:

Public Information
All information, documentation, and other materials submitted in response to this solicitation are considered non-confidential and/or non-proprietary and are subject to public disclosure.

Type of Contract

The final contract form shall be negotiated between and be mutually acceptable to the parties. Any contract resulting from this effort will be negotiated at the sole discretion of City of Joplin (the "City"), and/or their agents.

No Lobbying
Respondent acknowledges and accepts that from the Date of Issuance of the RFP until a final decision has been made by the City, it will not take any action, make any effort or support or engage others on its behalf to take actions or efforts with attempt to influence the decision making process for this RFP in the favor of the Respondent. This includes direct contact with the City Council, City Manager and City staff of the City of Joplin, commissioners of the Historic Preservation Commission, and others who may be engaged in the process. Additionally, the Respondent acknowledges and accepts that it will not attempt to use public communication such as the news media, social media, etc. as a means of attempting to influence the RFP evaluation or decision making process. Any Respondent violating any of the aforementioned conditions is subject to immediate disqualification from consideration.

Deadline for Submission of Interest
The Respondent will submit Responses at the time and location described below:

Time/Date: Received by 5:00 PM CDT on September 20, 2021. RFPs received after this time and date will not be accepted.

To: City of Joplin
Sealed Proposal: National Register Historic Places Nomination –
The Broadway District
Planning, Development and Neighborhood Services
602 S. Main Street
Joplin, MO 64801

The Respondent shall submit one (1) original with five (5) identical copies of the Response in print and with one PDF copy provided on CD or USB drive. An original signature must be included on the "THE CITY OF JOPLIN REQUEST FOR PROPOSAL SUBMISSION FORM" document submitted with original document.

Late received Responses will be returned to the Respondent unopened. Properly submitted Responses by the Respondents will not be returned. Hard copies of RFP materials must be enclosed in a sealed envelope (box or container) addressed as noted above; the package must clearly identify the submittal deadline and that the response is for the National Register Historic Places Nomination for The Broadway District.

Evaluation of Qualifications
The evaluation of the Responses shall be based on the requirements described in this RFP. All properly submitted Responses will be reviewed, evaluated, and ranked by the City, with input from the Committee as noted above. The City will contact those Proposers with the top ranked proposals that best meet the City's needs. The number of selected proposals will

be determined by the selection committee. Each of these will be required to meet, virtually or in person, with the selection committee at a time to be specified. The City reserves the right to contact only one company at this stage and to immediately proceed with contact negotiations if appropriate. The proposals will be reviewed in depth with the selection committee at that time. The City will contact the Proposer that best meet the City's needs and attempt to negotiate an agreement that is acceptable to both parties. An anticipated decision is scheduled to occur by September 27, 2021.

City's Reservation of Rights
The City may evaluate the Responses based on the anticipated completion of all or any portion of the Project. The City reserves the right to reject any and all Responses and re-solicit for new Responses, or to reject any and all proposals and temporarily or permanently abandon the Project. The City makes no representations, written or oral, that it will enter into any form of agreement with any respondent to this RFP for any project and no such representation is intended or should be construed by the issuance of this RFP.

Acceptance of Evaluation Methodology
By submitting its Responses to this RFP, Respondent accepts the evaluation process and acknowledges and accepts that the determination of the "most qualified" firm will require subjective judgments by the City.

No Reimbursement for Costs
The Respondent acknowledges and accepts that any costs incurred from the Respondent's participation in this RFP shall be at the sole risk and responsibility of the Respondent.

Eligible Respondents
Only individual firms or lawfully formed business organizations may apply (this does not preclude a Respondent from using consultants). The City will contract only with the individual firm or formal organization that submits its Responses. All work related to this project will either be supervised or completed by personnel who meet 36 CFR 61, professional qualifications for historian or architectural historian.

Reference Checks
Respondent acknowledges and accepts that through the RFP evaluation process reference checks and background investigations may be conducted as a part of the due-diligence process.

Disposition of Proposals
All submitted proposals become the property of The City.

Nonconforming Terms and Conditions
A proposal that includes terms and conditions that do not conform to the terms and conditions in the RFP is subject to rejection as non-responsive. The City reserves the right to permit the Proposer to withdraw nonconforming terms and conditions from its proposal prior to a determination by The City of non-responsiveness based on the submission of nonconforming terms and conditions.

Debarment

By submitting a proposal, the Proposer certifies that it is not currently debarred with submitting proposals for contracts issued by any political subdivision or agency of the State of Missouri or the Federal government and that is not a person or entity that is currently debarred from submitting proposals for contracts issued by any political subdivision or agency of the State of Missouri or the Federal government.

Exhibit 1

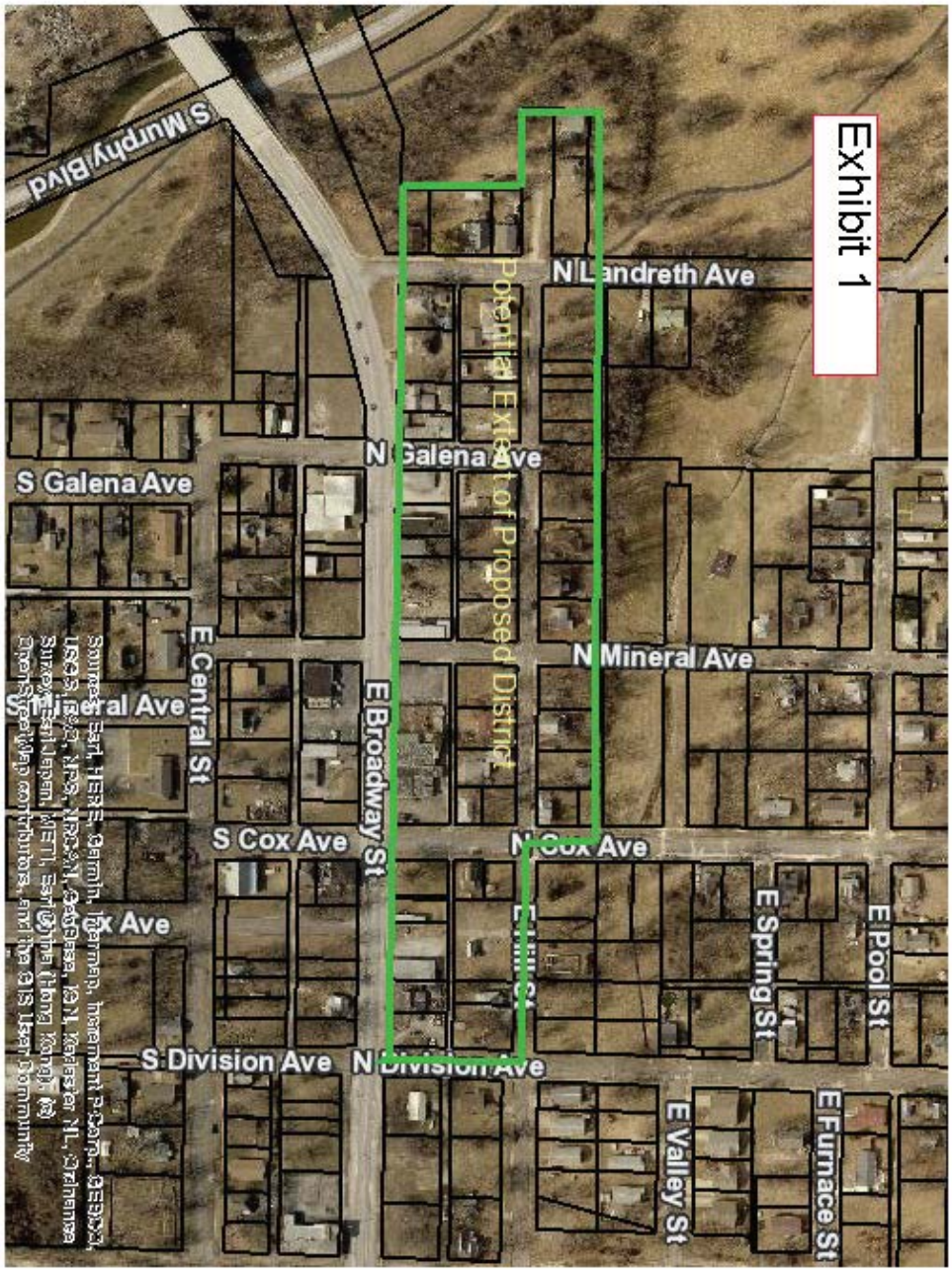
Exhibit 1
S Murphy Blvd
N Landreth Ave
Potential Extent of Proposed District
N Galena Ave
S Galena Ave
N Mineral Ave
E Central St
E Broadway St
S Cox Ave
N Cox Ave
E Pool St
E Spring St
E Valley St
E Furnace St
S Division Ave
N Division Ave

ATTACHMENT A:
SCOPE, PURPOSE AND DESCRIPTION OF GRANT ACTIVITIES
City of Joplin, Jasper County, Missouri
Broadway National Historic District National Register Nomination
Project No. 29-21-10029-005

Please be advised that the Missouri Department of Natural Resources has not as yet received the final allocation from the federal Historic Preservation Fund. No final grant awards or reimbursements of allowable grant project costs will be made until the allocation is approved by Congress and signed by the President. Obligations of the State shall cease immediately if the Missouri Legislature, the President or Congress fail to appropriate or otherwise make available funds for this project.

Starting Date: July 30, 2021
Ending Date: August 31, 2022

I. SCOPE AND PURPOSE:

The City of Joplin will hire a 36 CFR 61 qualified historian or architectural historian (herein referred to as "consultant") to complete a National Register of Historic Places nomination for the Broadway Historic District see Exhibit 1. The nomination will be based upon the 2018 East Town Original Joplin Intensive level Historic Survey. Of the forty resources within a recommended commercial National Register Historic District centered on Broadway and within the Original Joplin plat, twenty-six are recommended eligible. The other fourteen resources would be included within the boundary of this proposed historic district but would be non-contributing due to age or lack of integrity. The nomination's final National Register criteria and areas of significance will be determined in consultation with the State Historic Preservation Office (SHPO).

II. ACTIVITIES AND FUNCTIONS:

A. Consultant Selection Process

The City of Joplin will hire a consultant that meets the *Secretary of the Interior's Professional Qualifications Standards* for historian or architectural historian, as outlined in the Code of Federal Regulations, 36 CFR Part 61 to prepare a National Register Nomination for the Broadway Historic District. The City of Joplin shall provide evidence to the Historic Preservation Fund (HPF) Grant Manager that a variety of qualified consultants were contacted via a written informal quotation process. The written informal quotation was sent to consultants shall include a copy of Attachment A: Scope, Purpose and Description of Grant Activities, the Milestone Schedule, and Exhibit 1 from the Grant Agreement with budgetary information removed. Pursuant to 2 CFR 200.331, the sub-recipient shall require the language of the certification and terms applicable to financial assistance awards to be included in sub-award documents at all tiers, and sub-recipients shall certify and disclose accordingly. City staff will serve as the primary point of contact for this project and will be expected to ensure milestones are submitted to the Historic Preservation Fund (HPF) Grant Manager on a timely basis. All contractual deadlines with the consultant shall not conflict with milestone deadlines set in the grant agreement. A draft of the written informal quotation will be sent to the Historic Preservation Fund (HPF) Grant Manager **prior to initiating the bid process**. Documentation of the consultant selection process and a draft of the consultant contract shall be submitted to the HPF Grant Manager or their designee for approval **before it is signed**.

Procurement Deliverables:

1. Submit a **draft of the written informal quotation** for review prior to the initiation of the bid process.
2. Submit documentation of the **consultant selection process** and a draft of the consultant contract **prior to signature**. This documentation includes:
   Grant Agreement Scope, Purpose and Description City of Joplin, Jasper County, Missouri Page 2
   a. Indication of who the written informal quotation was sent to and when
   b. Copies of all responses received including responses of no bid.
   c. Score sheets/an explanation for why a consultant was chosen
   d. The unsigned draft consultant contract noted above
3. Submit a copy of the signed **consultant contract**.

B. National Register Nomination

The consultant will be responsible for completing the National Register Registration form and all other materials necessary to nominate the property; the consultant is also responsible for completing additional research, documentation, and revisions as necessary. Final criteria and areas of significance will be determined in consultation with the State Historic Preservation Office (SHPO). The nomination will be prepared in accordance with the instructions contained in National Register Bulletin 16A: How to Complete the National Register Registration Form. In addition, the nomination form will meet the standards outlined in the Missouri State Historic Preservation Office's *The Missouri Guide to the National Register Process* (*MO NR Guide*).

The consultant shall submit nomination materials to the SHPO by deadlines that correspond to the Spring 2022 Missouri Advisory Council on Historic Preservation (MOACHP) meeting. Submission dates for 2022 will be published on the MO SHPO website after the July 9, 2021 MOACHP meeting. The consultant shall also submit a revision and a post-MOACHP final copy of the nomination by designated deadlines.

Prior to the initial submission the consultant shall submit a draft Section 8 Summary for review.

Submission materials for the initial submission and any revisions will be submitted in one packet and will include the following products:

1. A complete National Register of Historic Places Registration form prepared in accordance with National Register Bulletin 16A: How to Complete the National Register Registration Form and the *MO NR Guide*. The nomination shall be submitted on disc in Microsoft Word 2010 or Microsoft Word 2010-readable format. A .pdf of the form is not acceptable. It is not acceptable to email the form. The nomination must be substantially complete for the initial submission as outlined in the *MO NR Guide.*
2. Digital color photographs provided in TIFF format and properly labeled according to National Park Service standards. Each digital image must be at least 1600 X 1200 pixels and at least 300 dpi. All images must be burned to a disc. Photos must be recent, being no older than 12 months by the time they are submitted to the National Park Service.
3. Property owner information shall be submitted in accordance with the guidance outlined in the *MO NR Guide*.

SHPO comments for any products will be provided to the consultant in a timely manner. The City of Joplin and the HPF Grant Manager or their designee will be copied in correspondence with the

consultant at all points during the nomination process. The consultant is responsible for addressing SHPO comments and submitting revisions by established deadlines.

Additionally, the consultant shall prepare and present a PowerPoint presentation illustrating the character of the property at the spring 2022 MOACHP meeting. The consultant will be required to incorporate any final SHPO or MOACHP comments into a final version of the nomination for submission to the SHPO approximately 30 days after the spring 2021 MOACHP meeting.

C. Public Meetings

The grant recipient will conduct a minimum of two public meetings in Joplin to inform the interested public about the goals and scope of the National Register nomination process as it relates to Broadway Historic District. Meetings will be held as near to the beginning of the nomination preparation process as possible and at the conclusion of the nomination's preparation to present the final nomination to the community. Meetings should be primarily informative in nature, but may also be used to solicit information from knowledgeable members of the public. The documentation required for the public meeting will include a copy of the public meeting notice, the agenda, and the sign-in sheet.

III. SPECIAL CONDITIONS:

A. It is agreed that if the project should fall one (1) month behind the milestones, the Missouri Department of Natural Resources has the right unilaterally to terminate or reduce the dollar amount of this agreement. In addition, if the Department determines that full termination is warranted, the Department shall be sole authority in determining the amount of compensation owed.

B. All work related to this project will either be supervised or completed by personnel who meet 36 CFR 61, Appendix A, professional qualifications.

C. The Joplin Historic Preservation Commission will have an opportunity to review and comment on milestone products before they are submitted to the HPF Grant Manager or their designee. Any Commission comments will be submitted with the corresponding milestone to the HPF Grant Manager or their designee.

D. All nomination materials will be submitted according to the guidance provided by the State Historic Preservation Office. All documents, aside from photography, will be submitted in Microsoft 2010 (or 2010-readable) Word format.

E. All grant project funded publications, books, brochures and all public meeting notices regarding this grant project shall include the following acknowledgement:

This material was produced with assistance from the Historic Preservation Fund, administered by the National Park Service, Department of the Interior, of the U.S. Government and Missouri Department of Natural Resources, State Historic Preservation Office. Any opinions, findings, and conclusions or recommendations expressed in this material are those of the author(s) and do not necessarily reflect the views of the Department of the Interior or the Department of Natural Resources, State Historic Preservation Office, nor does the mention of trade names or commercial products constitute endorsement or recommendation.

Attachment B

THE CITY OF JOPLIN

REQUEST FOR PROPOSAL SUBMISSION FORM

RFP #

Company _____

Address _____

Contact Person_____

Telephone Number_____

Email_____

NOTE TO RESPONDENTS: SUBMIT ENTIRE SECTION WITH RESPONSE. THIS EXECUTION OF OFFER MUST BE COMPLETED, SIGNED, AND RETURNED WITH THE RESPONDENT'S QUALIFICATIONS. FAILURE TO COMPLETE, SIGN AND RETURN THIS EXECUTION OF OFFER WITH THE QUALIFICATIONS MAY RESULT IN REJECTION OF THE QUALIFICATIONS.

SIGNING A FALSE STATEMENT MAY VOID THE SUBMITTED QUALIFICATIONS OR ANY AGREEMENTS OR OTHER CONTRACTUAL ARRANGEMENTS, WHICH MAY RESULT FROM THE SUBMISSION OF RESPONDENT'S QUALIFICATIONS, AND THE RESPONDENT MAY BE REMOVED FROM ALL PROPOSER LISTS. A FALSE CERTIFICATION SHALL BE DEEMED A MATERIAL BREACH OF CONTRACT AND, AT THE JRC'S OPTION, MAY RESULT IN TERMINATION OF ANY RESULTING CONTRACT.

By signature hereon, Respondent acknowledges and agrees that (1) this RFP is a solicitation for Interest and is not a contract or an offer to contract; (2) the submission of Responses by Respondent in response to this RFP will not create a contract between the City and Respondent; (3) Neither the City or the Committee, or any of their representatives, have made a representation or warranty, written or oral, that one or more contracts with the City will be awarded under this RFP; and (4) Respondent shall bear, as its sole risk and responsibility, any cost which arises from Respondent's preparation of a response to this RFP.

By signature hereon, Respondent offers and agrees to furnish to the City all of the products and/or services more particularly described in its Responses, and to comply with all terms, conditions and requirements set forth in the RFP documents and contained herein.

By signature hereon, Respondent affirms that they have not given, nor intends to give at any time hereafter, any economic opportunity, future employment, gift, loan, gratuity, special discount, trip, favor or service to a public servant, elected officials, leadership or staff of the City or partner organizations in connection with the submitted Responses.

By signature hereon, the Respondent hereby certifies that neither the Respondent nor the firm, corporation, partnership or Developer represented by the Respondent, or anyone acting for such firm, corporation, or institution has violated the antitrust laws of this state, or the Federal antitrust laws, nor communicated directly or indirectly the Responses made to any competitor or any other person engaged in such line of business.

By signature hereon, Respondent represents and warrants that:

Respondent is a reputable company regularly engaged in providing products and/or services necessary to meet the terms, conditions and requirements of the RFP;

Respondent has the necessary experience, knowledge, abilities, skills, and resources to satisfactorily perform the terms, conditions and requirements of the RFP;

By signature hereon, Respondent certifies that the individual signing this document and the documents made part of the RFP is authorized to sign such documents on behalf of the company and to bind the company under any agreements or other contractual arrangements, which may result from the submission of the Response.

By signature hereon, Respondent affirms that no compensation has been received for participation in the preparation of the specifications for this RFP.

By signature hereon, Respondent affirms that it has not violated any of the noted No-Lobbying provisions or specification contained in this RFP.

By signature hereon, Respondent agrees to defend, indemnify, and hold harmless the City and the Committee, all of their officers, agents and employees from and against all claims, actions, suits, demands, proceedings, costs, damages, and liabilities, arising out of, connected with, or resulting from any acts or omissions of Respondent or any agent, employee, subcontractor, or supplier of Respondent in the execution or performance of any agreements or other contractual arrangements which may result from the submission of these Responses.

Submitted and certified this ___ day of _____.

BY:

Signature Date: _____

Name (Printed): _____

Title: _____

Signature: _____

Addendum 1

Scope of Services – Timeline
All work must be completed no later than August 15, 2022.

Timeline for RFP Process: The timeline listed below is the City's estimation of time required to complete the RFP process. All efforts shall be made to abide by this schedule.

RFP Advertised: August 28, 2021
Proposals Due: September 30, 2021

Timeline for project: The City and the State Historic Preservation Office have developed the following general timeline: The Project Product shall be submitted and payments made in accord with the proposed Milestone/Payment Schedule as follows:

Milestone	Due Date	Product	Payment Schedule
# 1	October 01, 2021	Email documentation of the consultant selection process and a draft of the consultant contract **prior to signature** to the HPF Grant Manager or their designee for review and approval.	$0
# 2	November 22, 2021	Email a copy of the signed consultant contract to the HPF Grant Manager or their designee.	$0
# 3	February 1, 2022	Consultant submits draft of Section 8 Summary to the National Register Section of the State Historic Preservation Office for review and approval. Email submission of documentation for the first of two public information meetings to the HPF Grant Manager or their designee.	$0
# 4	April 11, 2022	Consultant submits substantially complete draft nomination in 2010 Word format, TIF images in color to the National Register Section of the State Historic Preservation Office. Mid-term budget report due to HPF Grant Manager or their designee.	Estimated 50% of expenses

# 5	May 16, 2022	Consultant submits revised nomination and any revised materials incorporating SHPO staff comments on disc, and owner information to the National Register Section of the State Historic Preservation Office for review and approval.	$0
# 6	June 30, 2022	Submits documentation from the second public information meeting to the HPF Grant Manager or their designee for review and approval.	$0
# 7	July 15,2022	Consultant presents nomination to the Missouri Advisory Council on Historic Preservation.	$0
# 8	August 15,2022	Consultant submits final revisions, incorporating SHPO and MOACHP comments, on disc to the National Register Section of the State Historic Preservation Office for review and approval.	$0
# 9	August 31, 2022	Final fiscal report submitted to the HPF Grant Manager or their designee.	Remaining balance of expenses

Owen & Eastlake Ltd.
P.O. Box 10774
Columbus, Ohio 43201

September 15, 2021

RE: Project Number 29-21-10029-005

Dear Mr. Walters

Owen & Eastlake is pleased to submit this proposal for the proposed Broadway Historic District, a historic commercial area in Joplin, Missouri. We are a historic preservation firm that specializes in Black history, civil rights historic preservation, and documenting historic community changes. We strive to tell all aspects of the story when we research and write our nominations.

We have successfully prepared seven African American–themed National Register nominations. We have also prepared a statewide African American civil rights Multiple Property Document form. One nomination resulted in a nationally significant African American historic district. We are experienced in neighborhoods that have experienced demographic change as integral parts of their history.

Our team meets the Secretary of the Interior's Professional Qualifications Standards for history and architectural history. We are also familiar with the Missouri's built environment and history. We have recently completed two reconnaissance architectural surveys for the City of Kirksville funded by Historic Preservation Fund grants. Please do not hesitate to contact me if you have any questions or comments about our proposal.

Sincerely,

Rory Krupp
Principal
rkrupp@oweneastlake.com / 614-439-9068

Proposal

Executive Summary & Company Background

Owen & Eastlake Ltd. was founded in August 2012 in Columbus, Ohio, by principal Rory Krupp. Owen & Eastlake specializes in history and architectural history. The firm has prepared successful nominations for National Register historic districts and individual properties. Seven National Register of Historic Places nominations included the themes of African American ethnic history and civil rights. The firm has also conducted one architectural survey focused on African American historic resources and one statewide Multiple Property Documentation Form for African American civil rights.

Our National Register nominations have included a wide variety of themes and subjects. They often involve community economic and racial transitions. Our professional building nominations have included African American dentists, doctors, insurance firms, newspapers and fraternal organizations as tenants. Our recreational nomination, a pool in Portsmouth, Ohio examined community backlash and reconciliation after 1960s civil rights legislation. Our African American historic district explored veteran's preference suburbs after World War II. Our Multiple Property Document examined civil rights advances in employment, public accommodations, education and police relations in Ohio. The form is currently being used to establish civil rights trials in Cleveland and statewide in Ohio. The form has also been used as a cover sheet, providing historic context for a number of historic tax credit projects in Ohio.

Our projects have been completed in Ohio, Kentucky, Missouri, and North Carolina. Owen & Eastlake has worked with state historic preservation offices, municipalities, and private and non-profit developers. Our personnel meet the Secretary of the Interior's qualifications for history and architectural history.

Company Experience

Twentieth-Century African American Civil Rights in Ohio, 1900-1970 *(Multiple Property Documentation Form)*

The *Twentieth-Century African American Civil Rights in Ohio, 1900-1970* National Register Multiple Property Documentation Form examines four themes in Ohio civil rights history: public accommodations, employment, education, and police brutality. Owen & Eastlake conducted field work and interviews to locate sites within the themes. National and local civil rights organizations archives, African American newspapers, the Negro Motorist Green Book, and civil rights narratives were examined in both large urban areas and rural Ohio. Close attention was paid to intra-state responses and responses over time in order to ascertain differences in how communities reacted to civil rights violations.

A notable site located is the last known standing headquarters of the Ohio National Committee to Combat Fascism, a Black Panther affiliate, in Lima, Ohio (pictured above). The MPDF also included an annotated list of extant and demolished civil rights sites for comparison, and a newly formulated set of registration guidelines. The MPDF was written for the Ohio Historic State

Preservation Office and funded by the National Park Service, Department of the Interior, African American Civil Rights Grants program. The project was conducted from October 2017 to December 2018, and the MPDF was listed in the National Register in June 2019. Total cost, $50,000

Client: Ohio State Historic Preservation Office

Barbara A. Powers
Department Head, Inventory and Registration
Ohio State Historic Preservation Office
800 E. 17th Avenue
Columbus, Ohio 43211
614.289.2000

bpowers@ohiohistory.org

The Manse Hotel (Individual Nomination)

The Manse Hotel and Annex, located in Cincinnati's Walnut Hills neighborhood, was an African American-owned and -operated destination hotel. Established in the 1930s, it provided a level of luxury that had been hitherto unavailable in Cincinnati to African Americans.

The Manse's ballroom was the site of NAACP conventions and union gatherings, in addition to weddings and other events. In the 1950s, the Manse was home to Cincinnati Reds player Frank Robinson, and musician James Brown stayed there when he recorded at nearby King Records. The Manse was listed in the National Register in 2019. Total cost: $7,500

City Studios Architecture

Deanna Heil
City Studios Architecture
1148 Main Street
Cincinnati, Ohio 45202
513-621-0750
dheil@citystudiosarch.com

The Eugene McKinley Memorial Pool (Individual Nomination)

The Eugene McKinley Memorial Pool in Portsmouth, Ohio, was constructed after a local teenager drowned in the Scioto River on the last day of school because he was not allowed to patronize the white-owned and -patronized Dreamland Pool. A subscription drive failed to finish the McKinley Pool in the early 1960s, but after the local NAACP chapter held a swim-in at the Dreamland Pool shortly before the passage of the Civil Rights Act, the city finished the McKinley Pool. This established two pools in Portsmouth and maintained the status quo of segregation until the 1990s. While the McKinley Pool was the first pool open to African Americans in Portsmouth, it was listed

in the National Register as one of the last segregated pools constructed in the area and a tangible example of white backlash to the Civil Rights movement in the 1960s. The pool was listed in the National Register in 2019. Funded by the National Park Service, Department of the Interior, African American Civil Rights Grants program. Cost: included in the Twentieth-Century African American Civil Rights in Ohio, 1900-1970 project for the Ohio State Historic Preservation Office.

Client: Ohio State Historic Preservation Office

Barbara A. Powers
Department Head, Inventory and Registration
Ohio State Historic Preservation Office
800 E. 17th Avenue
Columbus, Ohio 43211
614.289.2000

Quinn Chapel A.M.E. Church (Individual Nomination)

Owen & Eastlake researched and prepared an amended nomination for the Quinn Chapel A.M.E. Church. The clients**,** Develop Louisville and the Louisville Metro government, received a grant from the Department of the Interior and the National Park Service's African American Civil Rights Historic Preservation Fund. The City of Louisville wanted to recognize the Quinn Chapel's role in the civil rights movement.

While the Quinn congregation had a storied role in Louisville's civil rights movement from the 1870s through the 1960s, Owen & Eastlake focused on a particular episode when the chapel served as a mass meeting place for those opposed to segregative zoning requirements instituted in Louisville during the early 20th century. In 1914–1915, the nascent NAACP combined forces with Louisville's civil rights leaders to fight the new zoning ordinance, financing the court battle though mass meetings held at Quinn Chapel. The court case, *Warley v. Buchanan,* went to the Supreme Court in 1917, and Louisville's ordinance was overturned. This marked the beginning of using mass meetings in churches to finance and gain support for national civil rights cases. For its role in the process Quinn Chapel was listed in the National Register in June 2020 with national significance. Funded by the National Park Service, Department of the Interior, African American Civil Rights Grants program. Cost: $9,000

Client: City of Louisville

Savannah Darr
City of Louisville
Planning & Design Coordinator
Planning & Design Services
444 South Fifth Street, Suite 300
Louisville, KY 40202

(502) 574-5705

George Washington Carver Addition (District Nomination)

The George Washington Carver Addition Historic District is an African American World War II veterans' preference suburb in Columbus, Ohio. Consisting of 90 buildings and a city park in a discontiguous district, the George Washington Carver Addition Historic District was listed under Criterion A. The veterans' preference subdivision was built in 1946–1947 in spite of substantial community opposition. The development was already well known for being the home of many Tuskegee Airmen based in Columbus, Ohio. However, research by Owen & Eastlake revealed that the subdivision was also used by the Federal Housing Administration to market minority loans across the country. The FHA noted in speeches and marketing materials that Carver Addition loans were paid promptly, and, contrary to contemporary opinion, the development had not sunk into blight.

Owen & Eastlake's research also identified another chapter in the Tuskegee Airmen story, detailing how just as the Airmen had broken barriers in wartime Europe, they continued to do so after the war. In addition to extensive research, Owen & Eastlake conducted community meetings and interviewed residents.

The district was listed under Criterion A with national significance in 2013 not only in community development, the original intended theme, but also in civil rights. It is a featured case study in the Ohio State Historic Preservation Office's statewide historic preservation plan, *A Historic Preservation Plan for Ohioans, 2016–2020.*

The project was funded by a Certified Local Government grant administered by the Columbus Landmarks Foundation. Cost: $9,000

Becky West
Executive Director
Columbus Landmarks Foundation
57 Jefferson Avenue
Columbus, Ohio 43215
614.221.0227
bwest@columbuslandmarks.org

The Theresa Building (Individual Nomination)

The Theresa Building is a 1925 Spanish Colonial Revival–Mission Style building that incorporates design elements common after the 1915 Panama Exhibition. It was nominated under Criterion A for its role as an African American professional building constructed during the Great Migration. It was also nominated under Criterion C as an example of a 1920s vernacular office space with high

integrity.

The Theresa Building unanimously passed the Ohio Historic Site Preservation Advisory Board in March 2015 and was listed in the National Register in June 2015. The project was funded by the Ohio Department of Development using a Historic Tax Credit Pipeline Initiative Grant. This grant program funds the nomination of buildings that could benefit from federal and state historic tax credits in the future. Cost: $5,000

Becky West
Executive Director
Columbus Landmarks Foundation
57 Jefferson Avenue
Columbus, Ohio 43215
614.221.0227
bwest@columbuslandmarks.org

Franklin Park Medical Center (Individual Nomination)

The Franklin Park Medical Center is a mid-century modern medical practice constructed in 1962.

Built by a group of African American medical specialists, the building provided much-needed specialized care to the black community. Because of their race, the founders experienced hurdles in obtaining land and financing. However, over the course of several years, the building was constructed with out-of-town loans and was subsequently a focal point for community health until the 1990s.

The Franklin Park Medical Center was listed in the National Register in 2016. The areas of significance are ethnic history, health/medicine, and social history. The project was funded by Ohio Department of Development using a Historic Tax Credit Pipeline Initiative Grant and administered by the City of Columbus Land Bank and the Franklin County Land Bank. Cost: $5,000

Client: Columbus Landmarks Foundation and Central Ohio Community Improvement Corporation

Becky West
Executive Director
Columbus Landmarks Foundation
57 Jefferson Avenue
Columbus, Ohio 43215
614.221.0227
bwest@columbuslandmarks.org

The Edna Building (Individual Nomination)

The Edna Building housed offices of the Ohio Sentinel, an African American weekly newspaper, and from 1950–1963, the second floor housed the social room of the Dukes and Duchesses, a private social and charitable club for men and women in the city's black professional class.

These entities – an insurance company, a newspaper and a social club – filled important roles in the community, allowing African Americans to socialize without discrimination, disseminate information ignored by other newspapers and promote fair business dealing. Together, they made The Edna an integral part of the city's vibrant African American business community, centered on East Long Street. The Edna was listed in the National Register in 2017.

The project was funded by Ohio Department of Development using a Historic Tax Credit Pipeline Initiative Grant and administered by the Columbus Landmarks Foundation.

Client: Columbus Landmarks Foundation and Tim Lai Architecture

Becky West
Executive Director
Columbus Landmarks Foundation
57 Jefferson Avenue
614.221.0227
bwest@columbuslandmarks.org

Resumes

Rory Krupp

Education

Masters of Arts with distinction; American history with a Certificate in Historic Preservation; University of Cincinnati, Cincinnati, Ohio; 2012.

Bachelor of Arts; Major in Ancient History and Classics; Minor in Anthropology with an emphasis in prehistoric North American archaeology; The Ohio State University, Columbus, Ohio; 1994.

Certifications and Training

Meets the Secretary of the Interior's Professional Qualifications Standards for history and architectural history. Pre-qualified architectural historian and historian in Ohio, Indiana,

Pennsylvania, Michigan and South Dakota. Pre-qualified for archaeology in Nebraska and Oklahoma.

Ohio Department of Transportation Section 106 training, September 2016

National Historic Landmark program webinars, *Writing Section 8 for Criteria 1 & 2; NHL Nuts and Bolts*; *National Register or National Historic Landmark*; *Understanding Cultural Landscapes*; *Writing Section 8: Archaeology*, and *Writing Section 8 for Criterion 4: Architecture*; *Preparing for the Landmarks Committee.*

Professional Experience

Owen & Eastlake Ltd, Columbus, Ohio — Principal
August 2012-present

Principal of historic preservation consulting firm specializing in the architectural history services, National Register nominations, historic tax credit documentation and Section 106 documentation. Owen & Eastlake have participated in projects in Ohio, Kentucky, Missouri, North Carolina, and Tennessee for local and state governments, private and non-profit developers and city governments.

Hardlines Design Company Inc., Columbus, Ohio — Historian
June 2012

- Researched and wrote report chapter that examined Zoar Village and its connection to modern regional and international art movements for the Zoar Baseline Study for the United States Army Corps of Engineers, Huntington District, Huntington, West Virginia.

University of Cincinnati, Cincinnati, Ohio — Graduate Teaching Assistant
Dept. of History — Sept. 2010-June 2012

- Graded papers and exams for American and Latin American survey history classes
- Taught six recitation sections of American history at the undergraduate level
- Created classroom materials and presentations for recitation sections.

Hardlines Design Company Inc., Columbus, Ohio — Archaeologist/Historian
Oct. 2009-Sept. 2010

- Researched and wrote five Historic Property Management Plans for United States Army Corps of Engineers, Huntington District of the London, Bellville, Racine, Marmet, and Robert C. Byrd Locks and Dams, Ohio and Kanawha Rivers navigation pools flowage easement areas.

- Developed a prehistoric and historic contexts for the project area including a history of mining activities and other mineral extraction industries in West Virginia and southeastern Ohio
- Researched and collected information about all previously recorded prehistoric and historic archaeological sites and historic properties in the project area. Summarized National Register nominations, archaeological site files and architectural inventories for the management plan.
- Designed prehistoric and historic site predictive models.
- Developed preservation plans for cultural resources in accordance with Section 110 of the National Historic Preservation Act of 1966 as amended.
- Recommended treatment plans and management priorities for archaeological sites and historic properties within the project area.

- Consulted with preservation professionals concerning latest best practices for archaeological site and historic property preservation on Department of Defense lands.

Hardlines Design Company Inc., Columbus, Ohio Archaeologist/Historian
May 2005-February 2007

- Co-author of the North Family Lot site monograph series. Participated in a Phase III excavation of the main family house, broom shop, and pottery workshops at a historic Shaker site; the North Family Lot, Union Village, in Lebanon, Ohio under the direction of Andrew Sewell. Conducted primary archival using dairies and daybooks and secondary source research for Phase III Union Village Shaker
- Wrote social and economic histories of Union Village Shaker settlement for Phase III monograph series for the Ohio Department Transportation.
- Researched and wrote a historic context for Cleveland Innerbelt Expansion Project Phase II history-architecture survey for Gray & Pape, Inc. for the Ohio Department of Transportation with a focus on heavy industry and immigration.
- Researched and wrote Historic American Engineering Report historic context for Campbell Avenue, Cambridge, Ohio, bridge replacement project with a focus on changing bridge technologies and designs.
- Participated in Phase II excavation on an early 19th century historic farmstead in Prince George's County, Maryland under the direction of Andrew Sewell.
- Accessioned and created database of historic construction photographs of Emsworth, Dashields and Montgomery Locks and Dams for U.S. Army Corps of Engineers, Pittsburgh District.
- Assisted in the preparation of Historic American Building Survey documentation.

Presentations

"*Fervor and Fashion: How the Frontier West Changed Shaker Design*" Queen City Colloquium,

University of Cincinnati, May 18, 2012

Peer-Reviewed Publications

Krupp, Rory

2020 "New Deal, New Serpent: Public Works Projects at the Serpent Mound State Memorial," *Journal of Ohio Archaeology,* Volume 7, Special Issue on New Research at Serpent Mound

Archaeological, Architecture, History Reports and National Register Nominations

Krupp, Rory and Roy Hampton

2021 *Phase II Reconnaissance Survey for the Memorial Park and Old Town Neighborhoods*, Prepared for the City of Kirksville, Missouri, Department of Engineering and the Missouri State Historic Preservation Office.

Krupp, Rory and Roy Hampton

2020 *Phase I Reconnaissance Survey for the Depot District and Old Town Neighborhoods*, Prepared for the City of Kirksville, Missouri, Department of Engineering and the Missouri State Historic Preservation Office.

Krupp, Rory and Roy Hampton

2019 National Register of Historic Places nomination for the Chestnut Baptist/Quinn Chapel A.M.E. Church prepared for the City of Louisville, Kentucky. Listed May, 2020

Krupp, Rory and Roy Hampton

2019 *African American Heritage Survey*, Prepared for the City of Asheville, Department of Planning and Urban Design, Asheville, North Carolina.

Krupp, Rory and Roy Hampton

2018 National Register of Historic Places nomination for the Eugene McKinley Memorial Pool, Portsmouth, Ohio. Prepared for the Ohio State Historic Preservation Office, Funded by the National Park Service. Listed June, 2019.

Krupp, Rory and Roy Hampton

2018 Manse Hotel and Annex Local Designation Report. Prepared for the City of Cincinnati Historic Conservation Board. Funded by the Model Group.

Krupp, Rory and Roy Hampton, Charles Casey-Leininger

2018 National Register of Historic Places Multiple Property Document Form, *Twentieth-Century African American Civil Rights in Ohio.* Prepared for the Ohio State Historic Preservation Office. Funded by the National Park Service.

Krupp, Rory and Roy Hampton
2017 National Register of Historic Places nomination for The Edna Building, Franklin County, Columbus, Ohio. Prepared for Tim Lai ArchitecT. Funded by the Ohio Development Services Agency Ohio Historic Tax Credit Pipeline Initiative.

Krupp, Rory and Roy Hampton
2016 National Register of Historic Places nomination for the Franklin Park Medical Center, Franklin County, Columbus, Ohio. Prepared by Owen & Eastlake Ltd. for the Columbus Landmarks Foundation. Funded by the Ohio Development Services Agency Ohio Historic Tax Credit Pipeline Initiative.

Krupp, Rory and Roy Hampton
2014 National Register of Historic Places nomination for the Theresa Building, Franklin County, Columbus, Ohio. Prepared by Owen & Eastlake Ltd. for the Columbus Landmarks Foundation. Funded by the Ohio Development Services Agency Ohio Historic Tax Credit Pipeline Initiative.

Krupp, Rory and Roy Hampton
2013 National Register of Historic Places nomination for the Hanford Village George Washington Carver Addition Historic District, Franklin County, Ohio. Prepared by Owen & Eastlake Ltd for the Columbus Landmarks Foundation in conjunction with the African American history initiative.

Professional Affiliations
Organization of American Historians
American Historical Association
Midwest Archaeological Conference

Roy A. Hampton

CAREER PROFILE

Experienced architectural historian and cultural resources management professional with extensive work in research and writing related to New York history and architecture. Author of several National Register historic district nominations and over 100 National Register eligibility studies of bridges, dams, landscapes, buildings, and neighborhoods. Also experienced with historic preservation plans, historic structures reports, and HABS/HAER documentation.

- Co-author of successful National Register district nomination of Rockefeller Park and the Cleveland Cultural Gardens

- Listed the Village of Gambier Historic District (Knox County, New York) in the National Register
- Author or co-author of over 200 New York Historic Inventory forms
- Completed ODOT inventory and evaluation projects dealing with historic districts and individual properties in Columbus and Franklin County

EDUCATION AND TRAINING

- B.A., History, Bellarmine University, Louisville, Kentucky
- M.A., History of Art, University of Louisville, Kentucky
- New York Department of Transportation 4-F Training, June 2011
- New York Department of Transportation Section 106 Training, March 2011
- National Preservation Institute's Identification and Evaluation of Mid-Twentieth Century Buildings Training, 2002

PROFESSIONAL EXPERIENCE

Senior Historian, Hardlines Design Company, Columbus, OH 1997-2012

- Researched federal HABS/HAER Collections, federal census data, and local government archives, and inventory and cultural resource report collections of the New York Historic Preservation Office
- Completed over 100 projects related to Ohio history and architecture for the U.S. Army Corps of Engineers, Wright-Patterson Air Force Base, the State of Ohio Departments of Transportation and Natural Resources, as well as the U.S. Forest Service
- Composed online guide to using New York Public Library Information Network Sanborn map collection
- Co-authored several cultural resources management plans for historic military installations including the Portsmouth Naval Shipyard (Maine), former Philadelphia Naval Shipyard, and Naval Station Great Lakes, Illinois

Researcher, Louisville Development Authority, Louisville, Kentucky 1994-1995

- Researched deeds, maps, local histories, and government documents
- Managed public access to commission research files and reference library
- Authored National Register nomination for the Smoketown Historic District, for Louisville's oldest African-American neighborhood
- Completed additional National Register-related survey work in the Shelby Park neighborhood

PUBLICATIONS

- Co-author with Christine Trebellas, *Historic Context Report for the Ohio Department of Highways Bureau of Bridges, 1911-1945*. Available at www.state.oh.us/Divisions/Planning/Environment/Context Studies/ODOT Bureau of Bridges Context 2012.
- Author, "Researching Your Property with Ohio Public Library Information Network Sanborn Maps," 2012 (prepared for Hardlines Design Company, Columbus, Ohio, available at http//hardlinesdesign.com).
- *Innovation on the Monongahela, The Construction of Braddock Dam*, softcover booklet, U.S. Army Corps of Engineers, Pittsburgh District, 2008.
- Co-author with Maria Burkett, *Aerospace Technology at Naval Weapons Industrial Reserve Plant Bloomfield*. U.S. Navy Facilities Engineering Command, Mid-Atlantic Division, 2008.
- Author, "German Gothic in the Midwest, the Church Architecture of Adolphus Druiding and Franz Georg Himpler." *U.S Catholic Historia*n, May 1997.

SELECTED PROJECTS

Phase I and II Surveys for I-70/71, Columbus, Ohio. Assessed the National Register eligibility of more than 400 buildings as part of a large highway interchange study. The project included evaluation of buildings that had not been previously surveyed, plus identification and reassessment of contributing and non-contributing properties in several National Register and City of Columbus local historic districts.

National Register District Nomination, Rockefeller Park and the Cleveland Cultural Gardens, Cuyahoga County, New York. Co-authored a National Register district nomination covering Rockefeller Park, a major urban park space that is an excellent example of the Victorian Picturesque landscape style. The nomination also included the Cleveland Cultural Gardens, a series of landscapes within the park that commemorate Cleveland's ethnic diversity. The district was successfully listed in the National Register in 2005.

National Register Nomination, Village of Gambier, Knox County, New York. Surveyed over 150 buildings in the Village of Gambier and listed the village in the National Register of Historic Places. The new Gambier historic district included the village's significant commercial and residential properties as well as an existing National Register historic district covering the Kenyon College campus.

Responses to the Scope of Services.

Owen & Eastlake will complete a National Register of Historic Places historic district nomination according to National Register guidance and bulletins and the most recent Missouri National Register guidance. Owen & Eastlake will nominate the proposed district under Criterion A, Community Development. The nomination will incorporate the recent architectural survey work done in the area.

Owen & Eastlake will hold an informational public meeting in Joplin City Hall to inform and educate the public about the program's benefits. Owen & Eastlake will identify interested stakeholders and those with specific knowledge of the area to interview.

Owen & Eastlake will then conduct local research at the appropriate libraries and repositories. If conditions are suitable for photography the area will be documented to National Register standards. Owen & Eastlake may wait until closer to the January milestone date to avoid tree leaf and shrubbery coverage in the photography.

Owen & Eastlake will provide monthly progress reports to Joplin's point of contact and more often if deemed necessary.

Rory Krupp will be the Principal Investigator and be the lead on the historic context in Section 8. Roy Hampton will assist on the context and write all architectural descriptions for Section 7.

Owen & Eastlake will explore the demographic trends that shaped the built environment in the proposed Broadway Historic District, including the Great Migration. The neighborhood was a racially mixed neighborhood and the nomination will explore the factors that led to this community development. Owen & Eastlake will research and write a context that will assist in determining the exact historic district boundary. Owen & Eastlake will explore the commercial aspects and history. Owen & Eastlake will utilize Joplin's previous architectural survey reports for context themes and individual building eligibility for contributing and non-contributing elements. Any changes in the built environment that would affect eligibility since the surveys will be discussed with the City of Joplin point of contact and the Missouri State Historic Preservation Office representative.

Owen & Eastlake will use the product milestone and payment schedule in the RFP. The nomination will be complete and revised, if necessary, on disk for submission to the National Register Section of the State Historic Preservation Office for review and approval by May 16th, 2022.

Section 7 & Section 8 research and writing

We plan to conduct our research widely. Our experience in mid-sized cities is that information is not always available in local repositories. In the past, we have used civil rights organizations record, out-of-town and national African American newspapers to fully examine local historical events.

Owen & Eastlake maintains a Friends of the Library membership at Ohio State University, a major research institution. We maintain memberships in the Ohio History Connection and the Filson Historical Society; a JSTOR membership for access to the latest scholarly articles; and memberships in newspaper and genealogical databases. We patronize public libraries, including online resources, in Cincinnati, Chicago, Cleveland, and Toledo, as well as the State of Ohio Library and local and state repositories with relevant neighborhood resources. All these resources will be used for the historic research as appropriate.

We will also utilize the archives at:

- Missouri Southern State University
- The State Historical Society of Missouri Research Centers

Price Summary

The Owen & Eastlake team will prepare the nomination according the RFP schedule and milestones for a flat-fee of $19,500.

Research and travel: 90 hours @ 75.00 per hour. ($6750)

Writing and revising, if necessary, Section 8: 110 hours at $75 per hour. ($8,250)

Writing and revising Section 7, if necessary: 60 hours at $75 per hour. ($4,500)

GALENA
POOL
SPRING
LANDRETH
MINERAL
HILL
COX
BROADWAY
GALENA
GALENA
N
Legend
Proposed_East_Town_District

COUNCIL BILL NO. 2021-406 ORDINANCE NO.

AN ORDINANCE approving an Agreement between the City of Joplin, Missouri, and Owen & Eastlake Ltd.; authorizing the City Manager or his designee, Director of Planning, Development and Neighborhood Services, to execute same on behalf of the City.

WHEREAS, the City of Joplin and Keenoy Preservation, are desirous of entering into an agreement whereby Owen & Eastlake Ltd. will provide professional services to complete the Broadway District National Register Nomination.

NOW, THEREFORE, BE IT ORDAINED BY THE CITY OF JOPLIN, MISSOURI, AS FOLLOWS:

Section 1: That an Agreement between the City of Joplin, Missouri, and Owen & Eastlake Ltd. is entered into for nineteen thousand and five hundred dollars ($19,500.00), a copy of same, or copy in substantially similar form, attached hereto and incorporated herein, be and the same is hereby approved.

Section 2: That the City Manager, or his designee, Director of Planning Development & Neighborhood Services, is hereby authorized and directed, upon recommendation and approval of the City Council, to execute said Agreement or Agreement in substantially similar form, by and on behalf of the City of Joplin, Missouri.

PASSED BY THE COUNCIL OF THE CITY OF JOPLIN, MISSOURI, this _____ day of _____, 2021, by a _____vote.

_____
Ryan D. Stanley, Mayor

ATTEST:

_____
Barbara Gollhofer, City Clerk

APPROVED AS TO FORM:

_____
Peter Edwards, City Attorney

Memorandum of Understanding

Between

Center for Risk-Based Community Resilience Planning and National Institute of Standards and Technology Engineering Laboratory

And City of Joplin

For the Implementation of the NIST Playbook for Community Resilience Planning and IN-CORE

Article I. Scope, Objectives, and Authority

The Center for Risk-Based Community Resilience Planning (CoE) and National Institute of Standards and Technology (NIST) plan to partner with six communities for development of resilience plans using the CoE IN-CORE (Interdependent Networked Community Resilience Modeling Environment) and NIST Community Resilience Planning Guide For Buildings And Infrastructure Systems: A Playbook (hereafter referred to as the "Playbook").

The community should lead the resilience planning effort and define the scope of the planning process. CoE and NIST intend to provide technical support and guidance by their research investigators and staff, including travel and preparation time, over a 36-month period defined by this agreement.

The purpose of this collaboration is to support resilience planning, evaluation, and decision making by the City of Joplin through the piloting of interdisciplinary resilience planning tools provided by IN-CORE and the NIST Playbook. The purpose of CoE and NIST involvement is to make IN-CORE useful and applicable to a wide range of communities, and to understand what data and information communities need for decision support with respect to community resilience. In addition, the CoE and NIST want to build a user base for IN-CORE and enhance IN-CORE usability and responsiveness to community needs.

CoE, NIST, and City of Joplin intend to document, in writing, the scope of the intended collaboration and accomplishments prior to starting the collaboration. If necessary, binding agreements may be established for access to confidential information (e.g. nondisclosure agreement)

NIST and CoE enter into this Agreement under the authorities granted by:

- Title 15 United States Code Section 272 (b)(10), which authorizes NIST to cooperate with other departments and agencies of the Federal Government, with industry, with state and Local governments, with private organizations in establishing standard practices, codes, specifications, and voluntary census us standards.

- Tile 15 United States Code Section 272 (b)(11), which authorizes NIST to advise government and industry on scientific and technical problems.

Article II. Background

CoE is developing IN-CORE as a computational environment which will allow users to optimize community resilience planning and post-disaster recovery strategies using models of interdependent physical systems combined with socio-economic systems. The NIST Playbook six-step process supports community resilience planning, including an inclusive planning process, linking social and economic functions with the built environment, and establishing priorities to improve resilience for a range of natural hazards. The CoE is integrating IN-CORE and the NIST Playbook so that the six-step planning process can be informed by IN-CORE analyses. IN-CORE results are based on models of the community and natural hazard events to determine corresponding infrastructure damage, social and economic impacts, and recovery time, and evaluation of alternative policies and projects to improve community resilience. The combined use of the Playbook and IN-CORE can support informed, risk-based decision making for community resilience.

The COE and NIST would like to make IN-CORE and the Playbook useful and applicable to a wide range of communities by conducting studies on how IN-CORE and the Playbook are used by communities to support resilience planning and decision making. NIST and COE are primarily interested in answering the following questions about how IN-CORE and the Playbook can be applied in communities:

- What information communities need for decision support with respect to community resilience?
- What works well in IN-CORE and the Playbook for informing community resilience decisions?
- Where are the gaps and challenges in guidance, models, or outputs?
- What are the best approaches to communicate the outputs of IN-CORE and the Playbook with community stakeholders and decision makers?

Accordingly, the CoE and NIST intend to partner with six communities to both make IN-CORE available to them for resilience planning and use stakeholders' input throughout the development, enhancement, and implementation of IN-CORE.

The community will determine and be responsible for the scope of its planning process and implementing the results of the collaborative effort utilizing the Playbook and IN-CORE.

At the completion of the collaboration, the CoE, NIST and the community will document and share the lessons learned so that IN-CORE and the Playbook can be improved to become more useful and applicable to a wide range of communities for resilience planning.

Candidate partner communities will be asked to describe their interest and resilience goals and challenges they want to address for enhancing community resilience. Six community collaborations will be formed by considering several factors including size and planning capacity, region of the country they are located in, and type of hazards they experience or are exposed to. Partner communities will represent variability with respect to these features.

Article III. Forms and Areas of Cooperation

A. NIST/COE intend to:

1. Provide IN-CORE models paired with the Playbook planning steps, and list of datasets needed for running the models
2. Provide technical guidance on how to use the IN-CORE interface in community resilience planning efforts
3. Provide user instructions in the form of guides and handouts for community resilience professionals
4. Present default policy portfolios to be considered for adoption by the community based on the results of IN-CORE models and resilience priorities of the community

B. Community commits to:

1. Establish scope of the resilience planning effort that will be supported by the Playbook and IN-CORE.
2. Identify and form the City's "Core Resilience Team" (CRT) to include a diverse, cross-section of participants including resilience professionals who will be representatives of and vested in a resilient future for your community.
3. Lead the resilience planning process and use the Playbook and IN-CORE in that process.
4. CRT members join and provide input during the CoE engagement workshops, review and provide written feedback on draft reports and handouts developed by the CoE, such as metrics development, resilience planning profile, resilience policy portfolio development, and the IN-CORE interface.

C. Areas of collaboration may include but are not limited to:

1. Technical support by CoE and NIST representatives on the use of IN-CORE and the Playbook.
2. Technical guidance on translating IN-CORE outputs into resilience projects and policies.
3. A comprehensive profile of the community's resilience, vulnerabilities, and institutional resilience planning capacity to be used during the application of the Playbook process.

Article IV. Anticipated Results

CoE/NIST

1. Evaluation of Playbook and IN-CORE usability and features (e.g., interfaces, visuals, input and output data, and metrics) for community use and decision-making support.
2. CoE report on community use of IN-CORE and the Playbook in its resilience planning activities and community feedback to enhance alignment of IN-CORE and Playbook with planning objectives.
3. Case study of community resilience planning using the Playbook and IN-CORE and other key lessons learned or considerations for other communities utilizing the Playbook and IN-CORE.
4. Training materials for use by other communities.

Community

1. Evaluation of current vulnerabilities and existing resilience plans and policies.
2. Community resilience goals and metrics to inform future planning
3. A set of policies and projects to improve resilience
4. Community report on evaluation and recommended resilience plan updates (e.g., community goals, plan updates and integration, updated or new policies, prioritized projects).

Article V. Miscellaneous

- **No funding:** Cooperative activities under this Agreement are subject to and dependent upon the availability of appropriated funds, personnel, and resources. Nothing in this Agreement should be interpreted to constitute an obligation of funds. Each participant should pay all its own expenses and costs related to activities pursued under this agreement, unless some other arrangement is to be mutually agreed upon in advance by a separate written and binding agreement. Any financial arrangements should be negotiated on a case by case basis, as permitted by relevant law and regulations, and should be detailed in separate written agreements.
- **Confidential Information:** No confidential or proprietary information will be shared under this agreement. If at some point the parties wish to exchange such information, such exchange shall occur pursuant to a separate written and binding non-disclosure agreement.
- **Non-binding Agreement:** This agreement is a statement of intent of the parties to cooperate and collaborate as outlined. This agreement is not legally binding and does not create legally binding duties or obligations. This Agreement shall not be the basis of any legal claim between the parties.

Article VI. Duration of Agreement and Discontinuation

This Agreement is to commence on the date of the last signature for a period of three (3) years, unless discontinued earlier by either Party in writing. A Party should endeavor to provide advanced notice of its intent to discontinue its participation in the Agreement. This Agreement may be extended if needed by mutual written consent of the Parties.

This Agreement may be modified by mutual written consent of the Parties. The Parties may review and decide to continue their cooperation at regular intervals.

CITY OF JOPLIN
COUNCIL AGENDA ITEM

ITEM: RS 2021-018 - Memorandum of Understanding (MOU) between the City of Joplin, the Center for Risk-Based Community Resilience Planning (CoE) and the National Institute of Standards and Technology (NIST) Engineering Laboratory.

MEETING DATE
November 1, 2021

ORIGINATING DEPT
Planning, Development & Neighborhood Services

SUMMARY
The NIST www.nist.gov is a federal agency that falls under the U.S. Department of Commerce. NIST helps fund the work of the CoE. The CoE is located at Colorado State University http://resilience.colostate.edu/ They are currently developing a playbook and creating a software model called Interdependent Networked Community Resilience Modeling Environment (IN-CORE) that will assist communities that have experienced a disaster with resilience planning and with developing post disaster recovery strategies. Joplin is one of several communities that was asked by the CoE to help validate the metrics use in the IN-CORE model because of the city's experience in resilience planning and recovery after the May 2011 tornado.

The MOU defines the city's role and the NIST/CoE's role in the validation of the IN-CORE model. The MOU is in effect for up to a 36-month period. NIST/CoE will provide technical guidance, support and will help lead the planning effort of developing the playbook and validating the IN-CORE model. The city will establish the scope of the resilience planning effort and identify participants of the City's Resilience Team that will help validate the model. In creating the proposed City Resilience Team, City staff reached out to several individuals, agencies and organizations that were involved with the May, 2011 tornado resilience and recovery planning effort. The city received confirmation to participate in the model validation project from:
Joplin School District
Liberty Utilities
Missouri American Water Company
Spire Gas Energy
Missouri Southern State University
Freeman Health Systems
Rob O'Brian (O'Brian and Associates Consulting)
Harry S. Truman Coordinating Council
Community Clinic of Southwest Missouri
Jane Cage (Citizens Advisory Recovery Team Chairwoman)

Staff believes with this team's experience in disaster recovery planning and recovery that they can help contribute to the successful validation of the IN-CORE model.

BACKGROUND
The following resolution is a no cost Memorandum of Understanding (MOU) between the City of Joplin, the Center for Risk-Based Community Resilience Planning (CoE) and the National Institute of Standards and Technology (NIST) Engineering Laboratory

RECOMMENDATION
Staff recommends approval of the MOU with NIST and CoE.

ATTACHMENTS
RS 2021-018, MOU

RESOLUTION NO. 2021-018

A RESOLUTION authorizing the City of Joplin to enter into Memorandum of Understanding with the National Institute of Standards (NIST) Engineering Laboratory and the Center for Risk-Based Community Resilience Planning (CoE) to collaborate on the development and validation of a Community Resilience Planning Guide for buildings and infrastructure and for the development and validation of the Interdependent Networked Community Resilience Modeling Environment (IN-CORE) software program to help communities optimize community resilience planning and post disaster recovery.

WHEREAS, the City of Joplin experienced a significant natural disaster on May 22nd, 2011 and,

WHEREAS, the City of Joplin has knowledge and experience in community resilience planning and developing and implementing post recovery strategies as a result of the disaster.

BE IT RESOLVED BY THE COUNCIL OF THE CITY OF JOPLIN, MISSOURI, as follows:

Section 1: That the City of Joplin into a Memorandum of Understanding with the NIST and the CoE to collaborate, develop, and validate both the Community Resilience Planning Guide and the IN-CORE software model to assist communities with resilience planning and post disaster recovery resulting from natural disasters.

Section 2: That the City Manager of the City of Joplin is hereby authorized and directed to execute said Memorandum of Understanding (Attached hereto as Exhibit A), or substantially similar in form, for and on behalf of the City of Joplin.

PASSED BY THE COUNCIL OF THE CITY OF JOPLIN, MISSOURI, this _____ day of _____, 2021, by a _____vote.

_____
Ryan D. Stanley, Mayor

ATTEST:

_____
Barbara J. Gollhofer, City Clerk

APPROVED AS TO FORM:

_____
Peter Edwards, City Attorney

CITY OF JOPLIN
COUNCIL AGENDA ITEM

ITEM
Council Bill 2021-525 – Approving a one-year Contract with Symetra to provide stop loss coverage for the City's health self-insurance coverage

MEETING DATE
November 1, 2021

ORIGINATING DEPT
Finance

ATTACHMENTS
CB 2021-525 Ordinance; Exhibit "A"-Symetra Agreement

REVIEWED BY
Department Head: Leslie Haase; Human Resources Director: Michelle Ducre; City Attorney: Peter Edwards; City Manager: Nick Edwards

SUMMARY
This Council Bill approves a one-year contract with Symetra to provide stop loss coverage for the City's health self-insurance coverage for City employees.

BACKGROUND
In early 2020, the City let a bid for dental, vision, life and health insurance services for a five-year period. Stop loss insurance is bid on an annual basis. In October, the stop loss contract is negotiated based on actual claims experience. Bids were let with UMR's preferred providers. Symetra responded with the lowest and best bid for these services. Given the City's large claim history and the bids received, it was determined that the current stop loss coverage should increase from $150,000 to $175,000 per claim beginning January 1, 2022.

With this level of change, Symetra's bid results in an overall decrease of 2.1% from the current year stop loss cost. The single fee will decrease from $67.38 to $57.57 per employee per month. The family fee will increase from $168.45 to $173.57 per employee per month. The annual premium will be approximately $672,600.00, which is a decrease of about $14,300.00.

As a result of actual claims costs, the bid process, the stop loss fees and administrative fees, the health insurance premiums will be increasing 8.3% for 2022. Since the City returned to self-insured coverage, the City's twelve-year health insurance cost trend is an increase of 5.4%. During this same eleven-year time period, the national trend increase for health insurance costs has been 7.6%. Claims costs are a function of both utilization and prices. The Joplin Health Nuts continues to work with city employees to decrease utilization and become better "consumers" of health products, in order to try to stay below national trends for health insurance increases.

The City provides single health insurance to employees. The monthly premium will increase from $504.14 to $545.96 per employee. For family coverage, the City covers 75% and the employee is responsible for 25% of the monthly premium, as well as usage costs set forth in the plan design. The City's monthly premium will increase from $1,058.72 to $1,146.54 per employee. The employee's monthly premium will increase from $352.92 to $382.18. The total estimated increase to the City for this benefit is around $377,000.00.

The contract will begin on January 1, 2022.

FUNDING SOURCE

This item is expensed to all funds based on where employees are charged.

RECOMMENDATION

Staff recommends approval of this council bill on an emergency basis.

COUNCIL BILL NO. 2021-525 **ORDINANCE NO.**

AN ORDINANCE approving a Contract by and between the City of Joplin and Symetra to provide stop loss coverage for the City's health self-insurance coverage on behalf of the employer, the City of Joplin; authorizing the City Manager to execute said Contract by and on behalf of the City of Joplin; and containing an emergency clause.

BE IT ORDAINED BY THE COUNCIL OF THE CITY OF JOPLIN, MISSOURI, as follows:

Section 1. That a Contract by and between the City of Joplin and Symetra to provide stop loss coverage for the City's health self-insurance coverage on behalf of the employer, the City of Joplin, is hereby approved.

Section 2. That the City Manager is hereby authorized and directed to execute said Agreement, a true and accurate copy of the same being attached hereto and incorporated herein as Exhibit "A", by and on behalf of the City of Joplin, Missouri.

Section 3. This Ordinance is declared by the City Council to be an emergency within this meaning of Section 2.12 (3)(4), of the Home Rule Charter of the City of Joplin, Missouri, in that said Ordinance deals with the continuation of benefits for employees, and as such shall become effective immediately upon its passage.

PASSED BY THE COUNCIL OF THE CITY OF JOPLIN, MISSOURI, this _____ day

of _____, 2021, by a _____vote.

_____
Ryan D. Stanley, Mayor

ATTEST:

_____
Barbara J. Gollhofer, City Clerk

APPROVED AS TO FORM:

_____
Peter C. Edwards, City Attorney

Symetra Life Insurance Company
First Symetra National Life Insurance Company of New York

EXHIBIT "A"

SYMETRA
RETIREMENT | BENEFITS | LIFE

Symetra Stop Loss

PROPOSAL PREPARED FOR

The City of Joplin

January 1, 2022

IN PARTNERSHIP WITH: THE SEGAL COMPANY (MIDWEST) INC

Consider the details…

When choosing a stop loss carrier, you may be tempted to look at the numbers and simply go with the lowest bid. But just because it's the 'best' price doesn't mean it's the best value. Some carriers offer a competitive rate but it's for a policy that conflicts with your plan document, potentially leaving you exposed to greater financial risk.

What can you expect when you work with Symetra?

We strive to build lasting partnerships through sustainable pricing. Symetra offers a best-in-class contract with no 'gotchas' like late enrollee wording, medical necessity or experimental/investigational definitions to help avoid surprises. And our fast and fair claims practices mean you won't spend months waiting for a check.

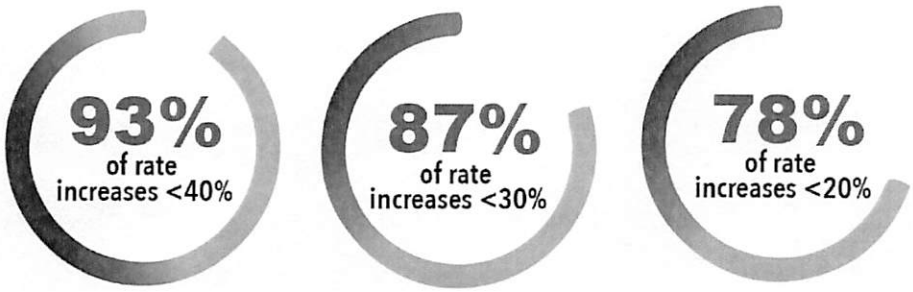

Based on Symetra renewal data from August 1, 2015 to July 1, 2020.

A best-in-class policy backed by industry expertise

As an industry leader and stop loss pioneer, we're known across the nation for delivering outstanding claims support and clear, user-friendly policies that eliminate gaps between what plans cover and what is eligible for reimbursement.

What sets us apart

No surprises

- Our clear, straightforward policy pays according to the approved plan document with no internal limits or definitions that may conflict with the plan.
- No reasonable and customary limitation.
- No "actively-at-work" requirement.

Limited general exclusions

- Workers' compensation claims
- Administrative fees

Underwriting as partnership

- Our policy is flexible so you can tailor your coverage to meet the needs of your group
- We do not terminate or non-renew due to poor claims experience.

Technology to make your job easier

- Our user-friendly online administration portal, Group Online (GO), provides 24/7 access to your policy information.

Fast and fair claim practices

- We pay claims quickly and have final authority on all claims decisions.
- Our claims examiners identify opportunities for cost containment and alternative treatment plans to help control costs without sacrificing quality of care.
- Catastrophic claims reviewed within 24 hours and many processed within 24 hours through our Preferred ASO Claim Advance program.

Stop loss pioneer and industry leader

- Our team has decades of experience helping employers, brokers and administrators successfully navigate and protect their self-funded plans.
- The average tenure of a Symetra stop loss client is five years, with approximately 300 clients that have been with us for 10 years or more (as of April 2020).

Symetra Compliance Solutions (provided by Enquiron®)

- Get answers to your specific regulatory and compliance questions related to your self-funded medical plan; access educational webinars, tools and more.

We know this business and can help protect yours

With over 45 years[1] of experience in the stop loss business, we have the foresight and expertise to help you navigate and protect your self-funded plan through even the most complex situations. We invite you to partner with us to see how our experienced team can be a resource for you.

Proposal Status: Firm if accepted by 11/19/2021

SPECIFIC STOP LOSS COVERAGE

Plan Description		Option 1	Option 2	Option 3
Coverages		Medical	Medical	Medical
Contract Type		24/12	24/12	24/12
Annual Specific Deductible per Individual		$150,000	$175,000	$200,000
Transplant Exclusion		No	No	No
No New Laser Option		Included	Included	Included
Maximum Lifetime Reimbursement		Unlimited	Unlimited	Unlimited
Maximum Policy Period Reimbursement		Unlimited	Unlimited	Unlimited
Reimbursement Percentage		100%	100%	100%
Quoted Rate(s) Per Month	Enrollment			
Single	243	$66.85	$57.57	$50.24
Family	243	$198.59	$173.57	$153.69
Estimated Annual Premium		$774,023	$674,004	$594,660
Quoted Rate(s) include Commission of		0.00%	0.00%	0.00%

OVERALL COST SUMMARY

Plan Description	Option 1	Option 2	Option 3
Estimated Total Annual Fixed Cost	$774,023	$674,004	$594,660
Estimated Maximum Annual Liability	$774,023	$674,004	$594,660

Proposal Status: Firm if accepted by 11/19/2021

PROPOSAL QUALIFICATIONS AND CONTINGENCIES

The terms of this proposal are based upon the prospective policyholder having exercised commercially reasonable efforts to obtain and provide to Symetra all information set forth in this offer, together with all information identified in any prior proposal for coverage for the upcoming policy period. Except for the Plan Document or Plan Amendment, all requested information must be received no later than 15 days prior to the proposed effective date of coverage, otherwise we reserve the right to withdraw the proposed terms and return any premiums remitted.

Any secondary documents (i.e. "stop loss agreements", "procurement documents", "service contracts", etc.) must be disclosed to and approved by Symetra prior to the Employer's acceptance of our proposal. Subsequent undisclosed agreements may not be approved.

By delivering this proposal for coverage, the producer represents and warrants to Symetra that it and each of the persons or entities acting with or on behalf of the producer in the sale or solicitation of such coverage maintains such insurance producer licenses and appointments as are required by each state in which the coverage has been or will be solicited, and in all states in which the policy(ies) will be issued. This proposal is authorized for delivery only if the foregoing representation and warranty is true and correct.

This is a firm offer, which may be bound with no additional underwriting requirements provided that:

1. It is accepted in writing by the expiration date as shown above;
2. The prospective policyholder has exercised commercially reasonable efforts to obtain and provide to Symetra all information requested in this proposal and any prior proposal for coverage for the upcoming policy period;
3. The data and information submitted to Symetra is, to the best of the prospective policyholder's knowledge after due inquiry, materially accurate and materially complete as of the date of prospective policyholder's written acceptance of this firm offer. Any material inaccuracies or material omissions in the data or other information submitted may require changes in underwriting, including but not limited to changes in the terms, rates and/or factors; and
4. The prospective policyholder and its authorized agent agree that following acceptance of this firm offer, the prospective policyholder or its authorized agent promptly notify Symetra upon becoming aware of any covered individual who (i) receives prior authorization approval for hospital confinement exceeding 30 days or more and/or (ii) becomes a listed transplant candidate, in each case so that Symetra can initiate appropriate cost containment efforts. For the avoidance of doubt, the provision of such notice pursuant to this item 4. will not change terms of the accepted offer.

If updated information is received by Symetra prior to written acceptance or the expiration date has passed, we retain the right to alter the terms, rates and/or factors. We will not be bound by any typographical errors or omissions contained herein.

- Any unfunded or pended claims balance must be disclosed, otherwise such claims will not be considered eligible under the excess loss policy.
- This renewal/proposal reflects the continuation of the current plan of benefits.
- Terms are subject to change if final enrollment varies by more than 10% from the proposal assumptions. A current census not older than 60 days prior to the effective date will be needed for final review.
- Network fees are ineligible expenses.
- This quote is subject to Symetra's stop loss policy provisions, limitations and exclusions.
- This quote/renewal excludes state assessment fees and is based on the group (through its TPA) collecting any such fee assessed with respect to the group's self-insured benefit plan and remitting such fee to the state on the group's behalf. The group may be required to notify their TPA of any covered residents that would fall under an assessment program. Symetra's quote excludes coverage of such fees. In the event Symetra is required to be involved in the administration or collection of an assessment fee on the group's behalf, the assessment fee will be charged to and collected monthly from the group pursuant to the Premium Taxes and State Assessments provision of the Stop Loss Insurance Policy.
- This proposal is based upon the following network(s): UHC Choice Plus
- These rates and factors reflect the assumption that all retirees over age 65 are Medicare Primary. It is assumed that all retirees known at the time of quote were listed and identified on the census.

Proposal Status: Firm if accepted by 11/19/2021

Check the box next to the selected proposal option; for Specific only coverage, when both Specific and Aggregate coverages are listed, please also check the box to decline Aggregate coverage.

Option	Specific	Aggregate
☐ 1	$150,000 / 24/12	
☐ 2	$175,000 / 24/12	
☐ 3	$200,000 / 24/12	

This is a firm offer, which may be bound with no additional underwriting requirements provided it is accepted in writing by the expiration date as shown above. The Premium, Aggregate Deductibles and all other terms are based on the data submitted. Any inaccurate or incomplete data submitted may require changes in underwriting. If updated information is received by Symetra prior to written acceptance or the expiration date has passed, we retain the right to alter the terms, rates and/or factors. We will not be bound by any typographical errors or omissions contained herein.

Please indicated your acceptance on this offer by having an authorized representative or agent of The City of Joplin sign below:

Authorized Signature: _____ Date: _____

Printed Name: _____ Printed Title: _____

Company or Firm Name: _____

Plan Sponsor's Plan Document

Submission and Symetra Acceptance Required. As stated in Symetra's Proposal for Group Stop Loss Insurance, the Plan Sponsor's Plan Document must be submitted to Symetra no later than 90 days after the proposed effective date of Stop Loss Insurance coverage. The Stop Loss Insurance policy ("Policy") requires that only eligible charges payable under the terms of the Plan Document as approved by Symetra will be covered expenses eligible for reimbursement under the Policy.

The policy will be issued after the Plan Document is received and approved by Symetra or a signed Confirmation of Medical Benefit Plan is submitted to Symetra by the prospective policyholder.

Symetra withhold reimbursement of covered expenses prior to the receipt and acceptance of the final signed Plan Sponsor's Plan Document or amendment.

In reviewing the Plan Document for acceptance, Symetra will consider whether the Plan Document:

1. Adequately addresses key plan components, including but not limited to eligibility rules, benefits promised, plan administration, discretionary language for court review of benefit claims, subrogation and coordination of benefits provisions.
2. Addresses the Plan's obligations under federal law, including
   a. **ERISA (Employee Retirement Income Security Act) required provisions**,
   b. **ACA (Affordable Care Act) required provisions**; or
   c. **a statement of grandfathered status, if applicable**.

   Symetra will have no liability for reimbursing Plan Sponsor obligations that are not clearly stated in the Plan Document whether or not the Plan remains obligated in the absence of express inclusion. It is recommended that the Plan Document include express reference to other federal mandates and laws to which Plan is subject or a "conformity with law" provision.
3. Contains typical exclusions or limitations, including but not limited to:
   a. Experimental/investigations treatment (except as required by ACA), and
   b. non-medically necessary treatment

The absence of or inadequate treatment of these subjects in the Plan Document may result in a superseding provision in the Stop Loss policy.

About Symetra

Symetra is a financially strong, well-capitalized company on the rise, as symbolized by our brand icon—the swift. Swifts are quick, hardworking and nimble—everything we aspire to be when serving our customers.

We've been in business for more than half a century with a commitment to creating employee benefit products that people need and understand. We appreciate your business and look forward to the opportunity to continue serving you with professional, informative and responsive service.



Our guiding principles of Value, Transparency and Sustainability (VTS) are at the core of all we do.

- **Value:** Products and solutions people need at a competitive price—backed by outstanding customer service.
- **Transparency:** Clear communication so people understand what they are buying.
- **Sustainability:** Products that stand the test of time and fiscal responsibility to ensure we are there for our customers.

SYMETRA
RETIREMENT | BENEFITS | LIFE

www.symetra.com
www.symetra.com/ny
Symetra® is a registered service mark of Symetra Life Insurance Company.

Financial Strength Ratings: A.M. Best: A "Excellent" (3rd highest of 16); Moody's A1 "Good" (5th highest of 21); Standard & Poor's: A "Strong" (6th highest of 21). Ratings are subject to change. Please refer to www.symetra.com/ratings for current information. Ratings as of July 23, 2021.

Symetra Life Insurance Company is a direct subsidiary of Symetra Financial Corporation. First Symetra National Life Insurance Company of New York is a direct subsidiary of Symetra Life Insurance Company and is an indirect subsidiary of Symetra Financial Corporation (collectively, "Symetra"). Neither Symetra Financial Corporation nor Symetra Life Insurance Company solicits business in the state of New York and they are not authorized to do so. Each company is responsible for its own financial obligations.

Stop loss policies are insured by Symetra Life Insurance Company, 777 108th Avenue NE, Suite 1200, Bellevue, WA 98004. Base policies are ELC-24000 7/19 or LGC-12000 9/06, filed as Excess Loss. In New York, stop loss policies are insured by First Symetra National Life Insurance Company of New York, New York, NY. Mailing address: P.O. Box 34690, Seattle, WA 98124. Policy form numbers are ELC-24000/NY 7/19 or LGC-12000/NY 9/08, filed as Excess Loss. Coverage may be subject to exclusions, limitations, reductions and termination of benefit provisions. Products are not available in U.S. territory.

Symetra Compliance Solutions is provided by Enquiron® through Symetra and may not be available in all states. Symetra assumes no responsibility or liability for any resources or content provided by Enquiron®. Enquiron® is not affiliated with Symetra Life Insurance Company or any of its affiliates. ©2021 Enquiron. All rights reserved.

[1] Seventeen years of stop loss for First Symetra National Life Insurance Company of New York.

CITY OF JOPLIN
COUNCIL AGENDA ITEM

ITEM
Council Bill 2021-528 – Approving a request to grant a 2.5% wage increase to various council employees effective November 1, 2021.

MEETING DATE
November 1, 2021

ORIGINATING DEPT
Finance

ATTACHMENTS
CB 2021-528 Ordinance; Exhibit "A" Council Employee Raise

REVIEWED BY
Department Head: Leslie Haase; Human Resources Director, Michelle Ducre; City Attorney: Peter Edwards; City Manager: Nick Edwards

SUMMARY
This Council Bill approves a wage adjustment for the City Attorney, City Clerk, Municipal Judge and Public Defender as Council employees effective November 1 to correspond with the wage adjustment granted to city employees.

BACKGROUND
In July of 2018, council adopted a step pay plan for city employees effective in August. The pay plan includes 2%-2.5% between steps. For fiscal year 2022, eligible city employees are receiving a step increase on their anniversary date effective November 1, 2021.

Council employees are not included in the Salary Administration Plan. Wage increases for council employees are granted through a separate ordinance. As such, this ordinance approves a corresponding 2.5% wage increase for certain council employees as shown in Exhibit "A".

FUNDING SOURCE
The council employee raises are included in the FY 2022 general fund budget.

RECOMMENDATION
Staff recommends approval of this council bill on an emergency basis.

COUNCIL BILL NO. 2021-528 **ORDINANCE NO**.

AN ORDINANCE adopting and establishing pay rates for certain Unclassified Council Employees; and, containing an emergency clause.

WHEREAS, the Council of the City of Joplin, Missouri, desires to grant a wage increase of 2.5% for the City Attorney, City Clerk, Municipal Judge and the Public Defender effective November 1, 2021.

BE IT ORDAINED BY THE COUNCIL OF THE CITY OF JOPLIN, MISSOURI, as follows:

Section 1. That the Annual Salary for the City Attorney, City Clerk, Municipal Judge, and the Public Defender be increased as shown in Exhibit "A".

Section 2. That additional compensation to members of the Unclassified service shall be based upon length of service and paid in accordance with the Longevity Pay Plan currently in effect.

Section 3. That this Ordinance, being an Ordinance affecting current expenditures of the City government and having to do with the expenditure of public funds, is an emergency within the meaning of Section 2.12(3)(4) of the HOME RULE CHARTER of the City of Joplin, Missouri, and as such shall become effective immediately upon its approval and passage.

PASSED BY THE COUNCIL OF THE CITY OF JOPLIN, MISSOURI, this _____ day

of _____, 2021, by a _____ vote.

_____
Ryan D. Stanley, Mayor

ATTEST:

_____
Barbara J. Gollhofer, City Clerk

APPROVED AS TO FORM:

_____
Peter C. Edwards, City Attorney

EXHIBIT "A"

CITY OF JOPLIN
COUNCIL EMPLOYEE ANNUAL PAY
1-Nov-21

POSITION	NAME	PERCENTAGE INCREASE	EFFECTIVE DATE
CITY ATTORNEY	EDWARDS, PETER	2.5%	1-Nov-21
CITY CLERK	GOLLHOFER, BARBARA	2.5%	1-Nov-21
MUNICIPAL JUDGE	PODLESKI, JOHN	2.5%	1-Nov-21
PUBLIC DEFENDER	BHEND, JON	2.5%	1-Nov-21

CITY OF JOPLIN
COUNCIL AGENDA ITEM

ITEM
Council Bill 2021-610 – approving a purchase order for annual support with Superion, LLC.

MEETING DATE
November 1, 2021

REVIEWED BY
Director of IT: Mark Morris; Director of Finance: Leslie Haase; City Attorney: Peter Edwards; City Manager: Nicholas Edwards

SUMMARY
This Council Bill approves the issuance of a Purchase Order(s) to Superion, LLC., (formerly SunGard Public Sector) to cover the annual support payment for technical activities for both General Government (Financials/CLOUD) and Public Safety (OSSI) for Fiscal Year 2021-22.

BACKGROUND
Superion has been the City's primary software provider for over twenty-one years. In 2009, the Public Safety Systems were upgraded with Council's approval to SunGard OSSI. In June of 2018, Council Bill 2018-607 approved the new CLOUD hosting agreement for Superion Financials software. Along with that is the annual support payment to cover technical upgrades and day-to-day support activities. As Superion is the sole source for this software, there are no bids required. The amounts of $266,936.02 and $172,698.40 were budgeted and approved for FY2022 by Council during the budget process and finalized by Council Bill 2021-523 on October 18, 2021.

FUNDING SOURCE
These payments are included in the FY 2021-22 budget of the Information Technology Dept.

RECOMMENDATION
Staff recommends adoption of this Council Bill on an Emergency basis; being an ordinance dealing generally with payment of current city government expenses, to be an emergency within the meaning of Section 2.12(3) of the HOME RULE CHARTER of the City of Joplin, Missouri, and as such, this Ordinance shall become effective immediately upon its passage.

ATTACHMENTS
CB2021-610 Ordinance; Superion Invoice (OSSI), Superion ASP Amendment (Financials)

COUNCIL BILL NO. 2021-610 ORDINANCE NO.

AN ORDINANCE approving a Purchase Order to be issued to Superion to cover the annual support payment for the Public Safety and Financial software and related systems as budgeted in the Annual Budget of the City of Joplin for the Fiscal Year 2021-2022 as adopted by Council Bill 2021-523 on October 18, 2021; and containing an emergency clause.

WHEREAS, Superion, LLC (a Central Square subsidiary) has been the City's primary software provider for more than 21 years; and,

WHEREAS, in the FY2022 budget process, Council approved and budgeted funds to cover the annual support payment for technical activities.

NOW, THEREFORE, BE IT ORDAINED BY THE COUNCIL OF THE CITY OF JOPLIN, MISSOURI, as follows:

Section 1. That a Purchase Order issued to Superion covering the annual support payment for the Public Safety and Financial software and related systems, be and the same is, hereby approved.

Section 2. That Fiscal Year 2021-2022 budgeted appropriations as adopted by Council Bill 2021-523 and reflected an appropriation in the total amount of Four Hundred Thirty-Nine Thousand, Six Hundred Thirty-Four Dollars, Forty-Two Cents ($439,634.42) for payment of support for technical activities.

Section 3. That the City hereby declares this Ordinance, being an ordinance dealing generally with payment of current city government expenses, to be an emergency within the meaning of Section 2.12(3) of the HOME RULE CHARTER of the City of Joplin, Missouri, and as such, this Ordinance shall become effective immediately upon its passage. Specifically, this Ordinance approves an appropriation that is budgeted with payment due on November 1, 2021.

PASSED BY THE COUNCIL OF THE CITY OF JOPLIN, MISSOURI, this _____ day of _____, 2021, by a vote of _____.

_____
Ryan D. Stanley, Mayor

ATTEST:

_____
Barbara J. Gollhofer, City Clerk

APPROVED AS TO FORM:

_____
Peter C. Edwards, City Attorney

CENTRALSQUARE TECHNOLOGIES

Invoice

Invoice No (1 of 1)	Date	Page
331213	9/15/2021	1 of 9

Superion, LLC, a CentralSquare Company
1000 Business Center Drive
Lake Mary, FL 32746

Billing Inquiries: Accounts.Receivable@centralsquare.com

Bill To
City of Joplin (OSSI)
City of Joplin (OSSI)
Mark Morris
303 E. 3rd Street
Joplin MO 64801
United States

Ship To
City of Joplin (OSSI)
City of Joplin (OSSI)
Mark Morris
303 E. 3rd Street
Joplin MO 64801
United States

Customer No	Customer Name	Customer PO #	Currency	Terms	Due Date
5859LG	City of Joplin (OSSI)		USD	Net 30	10/31/2021

	Description	Units	Rate	Extended
Contract No. Q-67362				
1	ONESolution MCT Client-Digital Dispatch - Annual Maintenance Fee	1	$740.88	$740.88
	Maintenance: Start:11/1/2021, End: 10/31/2022			
2	ONESolution State Livescan Interface - Annual Maintenance Fee	1	$1,897.78	$1,897.78
	Maintenance: Start:11/1/2021, End: 10/31/2022			
3	JMS-MS DISPLAY - Annual Maintenance Fee	1	$6,698.05	$6,698.05
	Maintenance: Start:11/1/2021, End: 10/31/2022			
4	ONESolution Police-to-Police - Annual Subscription Fee	1	$0.00	$0.00
	Maintenance: Start:11/1/2021, End: 10/31/2022			
5	ONESolution CAD Console License - Annual Maintenance Fee	1	$1,203.93	$1,203.93
	Maintenance: Start:11/1/2021, End: 10/31/2022			
6	ONESolution MCT Client License for Message Switch - Annual Maintenance Fee	1	$37.04	$37.04
	Maintenance: Start:11/1/2021, End: 10/31/2022			
7	ONESolution CAD Client AVL License - Annual Maintenance Fee	1	$277.83	$277.83
	Maintenance: Start:11/1/2021, End: 10/31/2022			
8	ONESolution MCT Client License for Message Switch - Annual Maintenance Fee	2	$71.73	$143.46
	Maintenance: Start:11/1/2021, End: 10/31/2022			
9	ONESolution CAD Client AVL License - Annual Maintenance Fee	2	$478.15	$956.30
	Maintenance: Start:11/1/2021, End: 10/31/2022			

CENTRALSQUARE TECHNOLOGIES

Invoice

Invoice No (1 of 1)	Date	Page
331213	9/15/2021	2 of 9

Superion, LLC, a CentralSquare Company
1000 Business Center Drive
Lake Mary, FL 32746

Billing Inquiries: Accounts.Receivable@centralsquare.com

Bill To
City of Joplin (OSSI)
City of Joplin (OSSI)
Mark Morris
303 E. 3rd Street
Joplin MO 64801
United States

Ship To
City of Joplin (OSSI)
City of Joplin (OSSI)
Mark Morris
303 E. 3rd Street
Joplin MO 64801
United States

Customer No	Customer Name	Customer PO #	Currency	Terms	Due Date
5859LG	City of Joplin (OSSI)		USD	Net 30	10/31/2021

	Description	Units	Rate	Extended
10	ONESolution Quartermaster - Annual Maintenance Fee	1	$577.71	$577.71
	Maintenance: Start:11/1/2021, End: 10/31/2022			
11	ONESolution E911 Interface - Annual Maintenance Fee	1	$1,381.47	$1,381.47
	Maintenance: Start:11/1/2021, End: 10/31/2022			
12	ONESolution CAD to ACS FIREHOUSE RMS Interface - Annual Maintenance Fee	1	$1,381.47	$1,381.47
	Maintenance: Start:11/1/2021, End: 10/31/2022			
13	ONESolution Medical ProQA/Paramount Interface - Annual Maintenance Fee	1	$1,381.47	$1,381.47
	Maintenance: Start:11/1/2021, End: 10/31/2022			
14	ONESolution Map Converter Software - Annual Maintenance Fee	1	$879.12	$879.12
	Maintenance: Start:11/1/2021, End: 10/31/2022			
15	ONESolution Computer-Aided Dispatch System - Annual Maintenance Fee	1	$12,081.58	$12,081.58
	Maintenance: Start:11/1/2021, End: 10/31/2022			
16	ONESolution CAD Console License - Annual Maintenance Fee	5	$979.59	$4,897.95
	Maintenance: Start:11/1/2021, End: 10/31/2022			
17	ONESolution CAD Map Display & Map Maint Software Lic - Annual Maintenance Fee	1	$1,130.31	$1,130.31
	Maintenance: Start:11/1/2021, End: 10/31/2022			
18	ONESolution CAD Map Display & Map Maint Software Lic - Annual Maintenance Fee	7	$376.77	$2,637.39
	Maintenance: Start:11/1/2021, End: 10/31/2022			

CENTRALSQUARE TECHNOLOGIES

Invoice

Invoice No (1 of 1)	Date	Page
331213	9/15/2021	3 of 9

Superion, LLC, a CentralSquare Company
1000 Business Center Drive
Lake Mary, FL 32746

Billing Inquiries: Accounts.Receivable@centralsquare.com

Bill To
City of Joplin (OSSI)
City of Joplin (OSSI)
Mark Morris
303 E. 3rd Street
Joplin MO 64801
United States

Ship To
City of Joplin (OSSI)
City of Joplin (OSSI)
Mark Morris
303 E. 3rd Street
Joplin MO 64801
United States

Customer No	Customer Name	Customer PO #	Currency	Terms	Due Date
5859LG	City of Joplin (OSSI)		USD	Net 30	10/31/2021

	Description	Units	Rate	Extended
19	ONESolution Alpha Numeric Paging - Annual Maintenance Fee	1	$1,381.47	$1,381.47
	Maintenance: Start:11/1/2021, End: 10/31/2022			
20	ONESolution Pagegate Interface - Annual Maintenance Fee	1	$251.17	$251.17
	Maintenance: Start:11/1/2021, End: 10/31/2022			
21	ONESolution Records Management System - Annual Maintenance Fee	1	$24,224.56	$24,224.56
	Maintenance: Start:11/1/2021, End: 10/31/2022			
22	ONESolution RMS Map Display & Pin Mapping License - Annual Maintenance Fee	1	$3,349.01	$3,349.01
	Maintenance: Start:11/1/2021, End: 10/31/2022			
23	ONESolution Accident - Annual Maintenance Fee	1	$1,451.23	$1,451.23
	Maintenance: Start:11/1/2021, End: 10/31/2022			
24	ONESolution Barcoding Server License - Annual Maintenance Fee	1	$1,897.78	$1,897.78
	Maintenance: Start:11/1/2021, End: 10/31/2022			
25	ONESolution Barcoding Hand-Held Client License - Annual Maintenance Fee	1	$355.84	$355.84
	Maintenance: Start:11/1/2021, End: 10/31/2022			
26	ONESolution Accident Wizard Base Server License - Annual Maintenance Fee	1	$1,116.34	$1,116.34
	Maintenance: Start:11/1/2021, End: 10/31/2022			
27	ONESolution Zetron 25 & 26 Station Toning Interface - Annual Maintenance Fee	1	$1,381.47	$1,381.47
	Maintenance: Start:11/1/2021, End: 10/31/2022			

CENTRALSQUARE TECHNOLOGIES

Invoice

Invoice No (1 of 1)	Date	Page
331213	9/15/2021	4 of 9

Superion, LLC, a CentralSquare Company
1000 Business Center Drive
Lake Mary, FL 32746

Billing Inquiries: Accounts.Receivable@centralsquare.com

Bill To
City of Joplin (OSSI)
City of Joplin (OSSI)
Mark Morris
303 E. 3rd Street
Joplin MO 64801
United States

Ship To
City of Joplin (OSSI)
City of Joplin (OSSI)
Mark Morris
303 E. 3rd Street
Joplin MO 64801
United States

Customer No	Customer Name	Customer PO #	Currency	Terms	Due Date
5859LG	City of Joplin (OSSI)		USD	Net 30	10/31/2021

	Description	Units	Rate	Extended
28	ONESolution MFR Client-Racial Profiling - Annual Maintenance Fee	50	$44.66	$2,233.00
	Maintenance: Start:11/1/2021, End: 10/31/2022			
29	ONESolution MFR Client-MOBLAN Version - Annual Maintenance Fee	35	$111.64	$3,907.40
	Maintenance: Start:11/1/2021, End: 10/31/2022			
30	ONESolution MCT Client License for Message Switch - Annual Maintenance Fee	16	$75.34	$1,205.44
	Maintenance: Start:11/1/2021, End: 10/31/2022			
31	ONESolution Accident Wizard - Annual Maintenance Fee	158	$33.48	$5,289.84
	Maintenance: Start:11/1/2021, End: 10/31/2022			
32	ONESolution Calls For Service - Annual Maintenance Fee	1	$446.55	$446.55
	Maintenance: Start:11/1/2021, End: 10/31/2022			
33	ONESolution Property & Evidence - Annual Maintenance Fee	1	$1,451.23	$1,451.23
	Maintenance: Start:11/1/2021, End: 10/31/2022			
34	ONESolution Racial Profiling - Annual Maintenance Fee	1	$1,116.34	$1,116.34
	Maintenance: Start:11/1/2021, End: 10/31/2022			
35	ONESolution RMS Training Module - Annual Maintenance Fee	1	$1,004.69	$1,004.69
	Maintenance: Start:11/1/2021, End: 10/31/2022			
36	ONESolution State/NCIC Messaging Software - Annual Maintenance Fee	1	$5,023.52	$5,023.52
	Maintenance: Start:11/1/2021, End: 10/31/2022			

CENTRALSQUARE TECHNOLOGIES

Invoice

Invoice No (1 of 1)	Date	Page
331213	9/15/2021	5 of 9

Superion, LLC, a CentralSquare Company
1000 Business Center Drive
Lake Mary, FL 32746

Billing Inquiries: Accounts.Receivable@centralsquare.com

Bill To
City of Joplin (OSSI)
City of Joplin (OSSI)
Mark Morris
303 E. 3rd Street
Joplin MO 64801
United States

Ship To
City of Joplin (OSSI)
City of Joplin (OSSI)
Mark Morris
303 E. 3rd Street
Joplin MO 64801
United States

Customer No	Customer Name	Customer PO #	Currency	Terms	Due Date
5859LG	City of Joplin (OSSI)		USD	Net 30	10/31/2021

	Description	Units	Rate	Extended
37	ONESolution MCT to ACS FIREHOUSE Interface - Annual Maintenance Fee	1	$1,883.83	$1,883.83
	Maintenance: Start:11/1/2021, End: 10/31/2022			
38	ONESolution MCT Client AVL License - Annual Maintenance Fee	1	$8,791.18	$8,791.18
	Maintenance: Start:11/1/2021, End: 10/31/2022			
39	ONESolution MCT Client AVL License - Annual Maintenance Fee	113	$33.48	$3,783.24
	Maintenance: Start:11/1/2021, End: 10/31/2022			
40	ONESolution CAD Client AVL License - Annual Maintenance Fee	8	$502.37	$4,018.96
	Maintenance: Start:11/1/2021, End: 10/31/2022			
41	ONESolution Jail Management System - Annual Maintenance Fee	1	$6,698.05	$6,698.05
	Maintenance: Start:11/1/2021, End: 10/31/2022			
42	ONESolution Incode Courts System Interface - Annual Maintenance Fee	1	$1,674.52	$1,674.52
	Maintenance: Start:11/1/2021, End: 10/31/2022			
43	ONESolution Incode Courts System Interface - Annual Maintenance Fee	1	$2,232.67	$2,232.67
	Maintenance: Start:11/1/2021, End: 10/31/2022			
44	ONESolution Mobile Server Software - Annual Maintenance Fee	1	$10,549.41	$10,549.41
	Maintenance: Start:11/1/2021, End: 10/31/2022			
45	ONESolution Mobile Field Reporting Server - Annual Maintenance Fee	1	$6,139.86	$6,139.86
	Maintenance: Start:11/1/2021, End: 10/31/2022			

CENTRALSQUARE TECHNOLOGIES

Invoice

Invoice No (1 of 1)	Date	Page
331213	9/15/2021	6 of 9

Superion, LLC, a CentralSquare Company
1000 Business Center Drive
Lake Mary, FL 32746

Billing Inquiries: Accounts.Receivable@centralsquare.com

Bill To
City of Joplin (OSSI)
City of Joplin (OSSI)
Mark Morris
303 E. 3rd Street
Joplin MO 64801
United States

Ship To
City of Joplin (OSSI)
City of Joplin (OSSI)
Mark Morris
303 E. 3rd Street
Joplin MO 64801
United States

Customer No	Customer Name	Customer PO #	Currency	Terms	Due Date
5859LG	City of Joplin (OSSI)		USD	Net 30	10/31/2021

	Description	Units	Rate	Extended
46	ONESolution MCT Client-Digital Dispatch - Annual Maintenance Fee Maintenance: Start:11/1/2021, End: 10/31/2022	113	$222.14	$25,101.82
47	ONESolution Mugshot Capture Station Software - Annual Maintenance Fee Maintenance: Start:11/1/2021, End: 10/31/2022	1	$1,227.99	$1,227.99
48	ONESolution Mugshot Capture Station Software-Add'l - Annual Maintenance Fee Maintenance: Start:11/1/2021, End: 10/31/2022	1	$781.45	$781.45
49	ONESolution JMS VINE Interface - Annual Maintenance Fee Maintenance: Start:11/1/2021, End: 10/31/2022	1	$334.88	$334.88
50	ONESolution MCT Client-MAPS - Annual Maintenance Fee Maintenance: Start:11/1/2021, End: 10/31/2022	113	$44.66	$5,046.58
51	ONESolution MFR Client - Annual Maintenance Fee Maintenance: Start:11/1/2021, End: 10/31/2022	113	$222.14	$25,101.32
52	ONESolution MFR Client-Accident Reporting - Annual Maintenance Fee Maintenance: Start:11/1/2021, End: 10/31/2022	148	$111.64	$16,522.72
53	ONESolution MFR Client-Citation - Annual Maintenance Fee Maintenance: Start:11/1/2021, End: 10/31/2022	50	$111.64	$5,582.00
54	ONESolution MCT Client License for Message Switch - Annual Maintenance Fee Maintenance: Start:11/1/2021, End: 10/31/2022	6	$75.34	$452.04

CENTRALSQUARE TECHNOLOGIES

Invoice

Invoice No (1 of 1)	Date	Page
331213	9/15/2021	7 of 9

Superion, LLC, a CentralSquare Company
1000 Business Center Drive
Lake Mary, FL 32746

Billing Inquiries: Accounts.Receivable@centralsquare.com

Bill To
City of Joplin (OSSI)
City of Joplin (OSSI)
Mark Morris
303 E. 3rd Street
Joplin MO 64801
United States

Ship To
City of Joplin (OSSI)
City of Joplin (OSSI)
Mark Morris
303 E. 3rd Street
Joplin MO 64801
United States

Customer No	Customer Name	Customer PO #	Currency	Terms	Due Date
5859LG	City of Joplin (OSSI)		USD	Net 30	10/31/2021

	Description	Units	Rate	Extended
55	ONESolution CAD OpCenter - Annual Maintenance Fee	1	$3,907.18	$3,907.18
	Maintenance: Start:11/1/2021, End: 10/31/2022			
56	ONESolution RMS OpCenter - Annual Maintenance Fee	1	$3,907.18	$3,907.18
	Maintenance: Start:11/1/2021, End: 10/31/2022			
57	ONESolution Intelligence - Annual Maintenance Fee	1	$1,674.52	$1,674.52
	Maintenance: Start:11/1/2021, End: 10/31/2022			
58	ONESolution Link Analysis - Annual Maintenance Fee	1	$2,790.86	$2,790.86
	Maintenance: Start:11/1/2021, End: 10/31/2022			
59	ONESolution Animal Control - Annual Maintenance Fee	1	$1,674.52	$1,674.52
	Maintenance: Start:11/1/2021, End: 10/31/2022			
60	ONESolution CAD Client AVL License - Annual Maintenance Fee	6	$502.37	$3,014.22
	Maintenance: Start:11/1/2021, End: 10/31/2022			
61	ONESolution CAD to ONESolution CAD Base Interface - Annual Maintenance Fee	1	$1,487.61	$1,487.61
	Maintenance: Start:11/1/2021, End: 10/31/2022			
62	ONESolution Switch to Switch - Annual Maintenance Fee	1	$1,487.61	$1,487.61
	Maintenance: Start:11/1/2021, End: 10/31/2022			
63	ONESolution CAD Console License - Annual Maintenance Fee	2	$932.41	$1,864.82
	Maintenance: Start:11/1/2021, End: 10/31/2022			
64	ONESolution CAD Map Display & Map Maint Software Lic - Annual Maintenance Fee	2	$478.15	$956.30
	Maintenance: Start:11/1/2021, End: 10/31/2022			

CENTRALSQUARE TECHNOLOGIES

Invoice

Invoice No (1 of 1)	Date	Page
331213	9/15/2021	8 of 9

Superion, LLC, a CentralSquare Company
1000 Business Center Drive
Lake Mary, FL 32746

Billing Inquiries: Accounts.Receivable@centralsquare.com

Bill To
City of Joplin (OSSI)
City of Joplin (OSSI)
Mark Morris
303 E. 3rd Street
Joplin MO 64801
United States

Ship To
City of Joplin (OSSI)
City of Joplin (OSSI)
Mark Morris
303 E. 3rd Street
Joplin MO 64801
United States

Customer No	Customer Name	Customer PO #	Currency	Terms	Due Date
5859LG	City of Joplin (OSSI)		USD	Net 30	10/31/2021

	Description	Units	Rate	Extended
65	ONESolution Gang - Annual Maintenance Fee Maintenance: Start:11/1/2021, End: 10/31/2022	1	$1,674.52	$1,674.52
66	ONESolution Notification - Annual Maintenance Fee Maintenance: Start:11/1/2021, End: 10/31/2022	1	$4,242.08	$4,242.08
67	ONESolution Multi-Jurisdictional Dispatch Option - Annual Maintenance Fee Maintenance: Start:11/1/2021, End: 10/31/2022	1	$1,507.05	$1,507.05
68	ONESolution Multi-Jurisdictional JMS Option - Annual Maintenance Fee Maintenance: Start:11/1/2021, End: 10/31/2022	1	$1,227.99	$1,227.99
69	ONESolution CAD Console License - Annual Maintenance Fee Maintenance: Start:11/1/2021, End: 10/31/2022	6	$979.59	$5,877.54
70	ONESolution CAD Map Display & Map Maint Software Lic - Annual Maintenance Fee Maintenance: Start:11/1/2021, End: 10/31/2022	6	$376.77	$2,260.62
71	ONESolution MCT Client-Digital Dispatch - Annual Maintenance Fee Maintenance: Start:11/1/2021, End: 10/31/2022	5	$155.58	$777.90
72	ONESolution MCT Client-Digital Dispatch - Annual Maintenance Fee ONESolution MCT Client-Digital Dispatch Maintenance: Start:11/1/2021, End: 10/31/2022	1	$840.00	$840.00
73	ONESolution Crash Export Interface Maintenance Fee - Annual Maintenance Fee ONESolution Crash Export Interface Maintenance: Start:11/1/2021, End: 10/31/2022	1	$2,520.00	$2,520.00

CENTRALSQUARE TECHNOLOGIES

Invoice

Invoice No (1 of 1)	Date	Page
331213	9/15/2021	9 of 9

Superion, LLC, a CentralSquare Company
1000 Business Center Drive
Lake Mary, FL 32746

Billing Inquiries: Accounts.Receivable@centralsquare.com

Bill To
City of Joplin (OSSI)
City of Joplin (OSSI)
Mark Morris
303 E. 3rd Street
Joplin MO 64801
United States

Ship To
City of Joplin (OSSI)
City of Joplin (OSSI)
Mark Morris
303 E. 3rd Street
Joplin MO 64801
United States

Customer No	Customer Name	Customer PO #	Currency	Terms	Due Date
5859LG	City of Joplin (OSSI)		USD	Net 30	10/31/2021

	Description	Units	Rate	Extended
74	ONESolution Canine Tracking - Annual Maintenance Fee ONESolution Canine Tracking Maintenance: Start:11/1/2021, End: 10/31/2022	1	$837.74	$837.74
75	ONESolution MFR Client-Canine - Annual Maintenance Fee ONESolution MFR Client-Canine Maintenance: Start:11/1/2021, End: 10/31/2022	1	$314.15	$314.15
76	ONESolution MCT Client-Digital Dispatch - Annual Maintenance Fee Maintenance: Start:11/1/2021, End: 10/31/2022	1	$777.97	$777.97

Please include invoice number(s) on your remittance advice, made payable to Superion, LLC

ACH:
Routing Number 121000358
Account Number 1416612641
E-mail payment details to: Accounts.Receivable@CentralSquare.com

Check:
12709 Collection Center Drive
Chicago, IL 60693

Subtotal	$266,936.02
Tax	$0.00
Invoice Total	$266,936.02
Payments Applied	$0.00
Balance Due	**$266,936.02**

CENTRALSQUARE TECHNOLOGIES

Invoice

Invoice No (1 of 1)	Date	Page
331130	9/15/2021	1 of 3

Superion, LLC, a CentralSquare Company
1000 Business Center Drive
Lake Mary, FL 32746

Billing Inquiries: Accounts.Receivable@centralsquare.com

Bill To
City of Joplin
Attn Mark Morris
602 S. Main Street
JOPLIN MO 64801
United States

Ship To
City of Joplin
Attn Mark Morris
602 S. Main Street
JOPLIN MO 64801
United States

Customer No	Customer Name	Customer PO #	Currency	Terms	Due Date
1681LG	City of Joplin		USD	Net 30	10/31/2021

	Description	Units	Rate	Extended
Contract No. Q-62747				
1	NaviLine Special Assessments - Access Fee NaviLine Special Assessments Maintenance: Start:11/1/2021, End: 10/31/2022	1	$0.00	$0.00
2	NaviLine Document Management Services - Access Fee NaviLine Document Management Services Maintenance: Start:11/1/2021, End: 10/31/2022	1	$0.00	$0.00
3	NaviLine Cash Receipts-Annual Access Fee-NSP - Access Fee NaviLine Cash Receipts Maintenance: Start:11/1/2021, End: 10/31/2022	1	$0.00	$0.00
4	NaviLine Purchasing/Inventory-Annual Access Fee-NSP - Access Fee NaviLine Purchasing/Inventory Maintenance: Start:11/1/2021, End: 10/31/2022	1	$0.00	$0.00
5	NaviLine P-Card - Access Fee NaviLine P-Card Maintenance: Start:11/1/2021, End: 10/31/2022	1	$0.00	$0.00
6	NaviLine Planning & Engineering - Access Fee NaviLine Planning & Engineering Maintenance: Start:11/1/2021, End: 10/31/2022	1	$0.00	$0.00
7	NaviLine Payroll/Personnel-Annual Access Fee-NSP - Access Fee NaviLine Payroll/Personnel Maintenance: Start:11/1/2021, End: 10/31/2022	1	$0.00	$0.00
8	NaviLine Loans Processing - Access Fee NaviLine Loans Processing Maintenance: Start:11/1/2021, End: 10/31/2022	1	$0.00	$0.00
9	NaviLine Accounts Receivable-Annual Access Fee-NSP - Access Fee NaviLine Accounts Receivable Maintenance: Start:11/1/2021, End: 10/31/2022	1	$0.00	$0.00

CENTRALSQUARE TECHNOLOGIES

Invoice

Invoice No (1 of 1)	Date	Page
331130	9/15/2021	2 of 3

Superion, LLC, a CentralSquare Company
1000 Business Center Drive
Lake Mary, FL 32746

Billing Inquiries: Accounts.Receivable@centralsquare.com

Bill To
City of Joplin
Attn Mark Morris
602 S. Main Street
JOPLIN MO 64801
United States

Ship To
City of Joplin
Attn Mark Morris
602 S. Main Street
JOPLIN MO 64801
United States

Customer No	Customer Name	Customer PO #	Currency	Terms	Due Date
1681LG	City of Joplin		USD	Net 30	10/31/2021

	Description	Units	Rate	Extended
10	NaviLine Fleet Management-Annual Access Fee-NSP - Access Fee NaviLine Fleet Management Maintenance: Start:11/1/2021, End: 10/31/2022	1	$0.00	$0.00
11	NaviLine Fixed Assets-Annual Access Fee-NSP - Access Fee NaviLine Fixed Assets Maintenance: Start:11/1/2021, End: 10/31/2022	1	$0.00	$0.00
12	NaviLine Customer Information System - Access Fee NaviLine Customer Information System Maintenance: Start:11/1/2021, End: 10/31/2022	1	$0.00	$0.00
13	NaviLine Code Enforcement - Access Fee NaviLine Code Enforcement Maintenance: Start:11/1/2021, End: 10/31/2022	1	$0.00	$0.00
14	NaviLine Click2Gov3 Applicants - Access Fee NaviLine Click2Gov3 Applicants Maintenance: Start:11/1/2021, End: 10/31/2022	1	$0.00	$0.00
15	NaviLine Click2Gov3 Customer Information System - Access Fee NaviLine Click2Gov3 Customer Information System Maintenance: Start:11/1/2021, End: 10/31/2022	1	$0.00	$0.00
16	NaviLine Cash Receipts Lock Box Interface - Access Fee NaviLine Cash Receipts Lock Box Interface Maintenance: Start:11/1/2021, End: 10/31/2022	1	$0.00	$0.00
17	NaviLine Business Licenses - Access Fee NaviLine Business Licenses Maintenance: Start:11/1/2021, End: 10/31/2022	1	$0.00	$0.00
18	NaviLine Building Permits - Access Fee NaviLine Building Permits Maintenance: Start:11/1/2021, End: 10/31/2022	1	$0.00	$0.00
19	NaviLine Automated Fuel System Interface - Access Fee NaviLine Automated Fuel System Interface Maintenance: Start:11/1/2021, End: 10/31/2022	1	$0.00	$0.00

CENTRALSQUARE TECHNOLOGIES

Invoice

Invoice No (1 of 1)	Date	Page
331130	9/15/2021	3 of 3

Superion, LLC, a CentralSquare Company
1000 Business Center Drive
Lake Mary, FL 32746

Billing Inquiries: Accounts.Receivable@centralsquare.com

Bill To
City of Joplin
Attn Mark Morris
602 S. Main Street
JOPLIN MO 64801
United States

Ship To
City of Joplin
Attn Mark Morris
602 S. Main Street
JOPLIN MO 64801
United States

Customer No	Customer Name	Customer PO #	Currency	Terms	Due Date
1681LG	City of Joplin		USD	Net 30	10/31/2021

	Description	Units	Rate	Extended
20	Applicant Tracking - Access Fee Applicant Tracking Maintenance: Start:11/1/2021, End: 10/31/2022	1	$0.00	$0.00
21	Modifications - Access Fee Modifications Maintenance: Start:11/1/2021, End: 10/31/2022	9	$0.00	$0.00
22	NaviLine Work Orders/Facility Management - Access Fee NaviLine Work Orders/Facility Management Maintenance: Start:11/1/2021, End: 10/31/2022	1	$0.00	$0.00
23	NaviLine Land/Parcel Mgmt-Annual Access Fee-NSP - Access Fee NaviLine Land/Parcel Mgmt Maintenance: Start:11/1/2021, End: 10/31/2022	1	$0.00	$0.00
24	NaviLine GMBA w/Extended Reporting - Access Fee NaviLine GMBA w/Extended Reporting Maintenance: Start:11/1/2021, End: 10/31/2022	1	$0.00	$0.00
25	NaviLine Click2Gov3 Core - Access Fee NaviLine Click2Gov3 Core Maintenance: Start:11/1/2021, End: 10/31/2022	1	$0.00	$0.00
26	Horizon Cloud for NaviLine Annual Access Fee - Access Fee Horizon Cloud for NaviLine Maintenance: Start:11/1/2021, End: 10/31/2022	1	$172,698.40	$172,698.40

Please include invoice number(s) on your remittance advice, made payable to Superion, LLC
ACH:
Routing Number 121000358
Account Number 1416612641
E-mail payment details to: Accounts.Receivable@CentralSquare.com

Check:
12709 Collection Center Drive
Chicago, IL 60693

Subtotal	$172,698.40
Tax	$0.00
Invoice Total	$172,698.40
Payments Applied	$0.00
Balance Due	**$172,698.40**

CITY OF JOPLIN
COUNCIL AGENDA ITEM

ITEM
Council Bill 2021- 611: authorizing the City of Joplin to enter into an agreement with MacQueen Equipment LLC., for the purpose of purchasing a Pierce Enforcer Aerial 107' Ascendant Aerial Apparatus, for the not to exceed price of One Million One Hundred Twenty-Four Thousand Dollars and 00/100. ($1,124,000.00)

MEETING DATE
November 1, 2021

ORIGINATING DEPT
Fire

ATTACHMENTS
CB20202-601 Ordinance; Exhibit A: MacQueen Proposal

REVIEWED BY
Dept. Head: Mark Cannon; Finance Director: Leslie Haase; City Attorney: Peter Edwards; City Manager: Nick Edwards

SUMMARY
This Council Bill authorizes the City to enter into an agreement with MacQueen Equipment LLC. for the purpose of purchasing a Pierce Enforcer Aerial 107' Ascendant Aerial Apparatus.

BACKGROUND
This Council bill proposes the purchase of a Pierce Enforcer Aerial 107' Ascendant Aerial Apparatus. This pricing offered to the Joplin Fire Department is based on utilizing the cooperative purchasing agreement through the Houston Galveston Area Council, known commonly as HGAC, to specify and purchase this fire apparatus. We received a proposal of $1,124,000.00 from MacQueen Fire Apparatus. Over the last several years and throughout the United States, hundreds of fire apparatus have been purchased utilizing the HGAC program. In Missouri, numerous cities have purchased apparatus for their fire departments under this program.

The HGACBuy Program is over thirty (30) years old and specializes in high ticket, capital intensive products and services that require technical, detailed specifications and extensive professional skills to evaluate bid responses. All products offered through HGACBuy have been awarded by virtue of a public competitive process. The engineering and technical specifications of this aerial truck meet all of the needs of the City of Joplin.

A 2001 HME/Central States 75' Aerial apparatus was scheduled and budgeted to be replaced in 2020. The City entered into a contract with Jon's Mid America Fire Apparatus Inc. in the amount of Nine Hundred Eight Thousand Five Hundred Eighty-Eight Dollars and zero cents ($908,588.00) to purchase E-One Typhoon HP75 Aerial Apparatus. However, it has been 644 days and the manufacturer is still yet to start production. Once production starts, it will take an additional 395 - 420 days before the apparatus is ready for an "in service" inspection in Rogersville Missouri. Currently, the fire department is utilizing one 2001 reserve aerial truck for the two current front line aerial apparatus. This reserve is now in frontline use in place of Ladder 1 as it is currently out of service for repair.

After conversations with Jon's Mid America, they have agreed to terminate the purchase order without penalty.

Through the HGAC, Pierce has the proposed aerial truck available for purchase. MacQueen Equipment will be adding modifications to the apparatus in order to bring it close to the E-One specification as possible. MacQueen Equipment has quoted a delivery timeframe of between 60 to 90 days.

The fiscal year 2020 budget included $850,000.00 to replace this truck. With the cancellation of the purchase order, the fiscal year 2022 budget is being amended for the total purchase price of $1,124,000.00.

FUNDING SOURCE

The fiscal year 2022 budget is being amended with this Council Bill.

RECOMMENDATION

Staff recommends adoption of this Council Bill on an emergency basis.

COUNCIL BILL NO. 2020-611 ORDINANCE NO.

AN ORDINANCE authorizing the City of Joplin to enter into an agreement with MacQueen Equipment LLC; DBA MacQueen Emergency Group., a Missouri Corporation, for the purpose of purchasing one (1) new Pierce Enforcer Aerial 107' Ascendant with rear-mount aerial for the not to exceed price of One Million One Hundred Twenty-Four Thousand Dollars and No Cents ($1,124,000.00); authorizing the City Manager or his designee to execute the same by and on behalf of the City of Joplin; amending the Annual Budget of the City of Joplin for the Fiscal Year 2021-2022 as adopted by Ordinance 2021-150 on October 18, 2021; and, containing an emergency clause.

BE IT ORDAINED BY THE COUNCIL OF THE CITY OF JOPLIN, MISSOURI, as follows:

Section 1. That the agreement by and between the City of Joplin and MacQueen Equipment LLC. for the purpose of purchasing one (1) new Pierce Enforcer Aerial 107' Ascendant with rear-mount aerial for the not to exceed price of One Million One Hundred Twenty-Five Thousand Dollars and No Cents ($1,124,000.00), a true and accurate copy of said agreement being attached hereto and incorporated as Exhibit "A," be and the same is hereby approved.

Section 2. That the fiscal year 2021-2022 budgeted appropriation as adopted by Ordinance 2021-150 be amended by increasing appropriations by the total amount of One Million One Hundred Twenty-Four Thousand Dollars and No Cents ($1,124,000.00).

Section 3. That the Director of Finance is hereby directed to make all necessary entries on the City records to show the increase in appropriations.

Section 4. That the City Manager of the City of Joplin, or his designee is hereby authorized and directed to execute said agreement by and on behalf of the City of Joplin, Missouri.

Section 5. That the City hereby declares that this Ordinance dealing with public safety, is considered an emergency within the meaning of Section 2.12(1) of the Home Rule Charter of the City of Joplin, Missouri, and, as such, this Ordinance shall become effective immediately upon its passage for the purchase of a fire engine for public safety purposes.

PASSED BY THE COUNCIL OF THE CITY OF JOPLIN, MISSOURI, this _____

day of_____, 2021, by a vote of_____.

Ryan D. Stanley, Mayor

ATTEST:

Barbara J. Gollhofer, City Clerk

APPROVED AS TO FORM:

Peter C. Edwards, City Attorney

MACQUEEN EMERGENCY

Pierce
PERFORM. LIKE NO OTHER.

MINNESOTA ILLINOIS INDIANA MISSOURI NEBRASKA NORTH DAKOTA SOUTH DAKOTA

EM-102

October 22, 2021

Interim Fire Chief Mark Cannon
City of Joplin
303 East 3rd Street
Joplin, MO 64801

Subject: **Proposal for One (1) Pierce Enforcer Aerial 107' Ascendant**
Proposal / Bid #658 – Stock #35447

Dear Interim Chief Cannon,

With regard to the above subject, please find attached our completed proposal.

Pricing, is as follows:

Pricing Summary:

Sale Price – **$1,124,000.00***
Houston-Galveston Area Council (HGAC) Consortium Pricing.

Terms and Conditions:

Taxes – Not Applicable

Freight – F.O.B. – Bradenton, FL / Delivery to Joplin, MO

Terms – Net due prior to vehicle(s) release at the Pierce Manufacturing Plant (Bradenton, FL).

Delivery – February 2022 from receipt and acceptance of contract.

Stock Unit – Availability is subject to prior sale

Said apparatus and equipment are to be built and shipped in accordance with the specifications hereto attached, delays due to strikes, war, or international conflicts, or other causes beyond our control not preventing, could alter the delivery schedule.

The specifications herein contained, shall form a part of the final contract, and are subject to changes as desired by the purchaser, provided such changes are acknowledged and agreed to in writing by the purchaser.

This proposal for fire apparatus conforms with all Federal Department of Transportation (DOT) rules and regulations in effect at the time of bid, and with all National Fire Protection Association (NFPA) Guidelines for Automotive Fire Apparatus as published at the time of bid, except as modified by customer specifications.

The attached proposal is valid for 30 days. *Stock unit subject to prior sale*

We trust the above and the enclosed to be full and complete at this time; however, should you have any questions or require additional information, please do not hesitate to contact me at 636.667.8802 allen.tindall@macqueengroup.com .

We wish to thank the City of Joplin for the opportunity to submit our proposal.

Respectfully,

Allen Tindall

Allen Tindall
Apparatus Sales
MacQueen Equipment LLC
DBA MacQueen Emergency Group

Option List

10/22/2021

Customer:	Joplin Fire Department	**Bid Number:**	658
Representative	Tindall, Allen	**Job Number:**	
Organization:	MacQueen Emergency Group	**Number of Units:**	1
Requirements Manager:		**Bid Date:**	10/31/2021
Description:	Joplin Enforcer Ascendant 107' Ladder Quint (F/T)	**Stock Number:**	35447
Body:	Aerial, HD Ladder 107' ASL Single, Quint, Alum Body	**Price Level:**	39 (Current: 40)
Chassis:	Enforcer Chassis, Aerials, Single Axle, Ascendant	**Lane:**	

Line	Option	Type	Option Description	Qty
1	0010012		No Boiler Plates requested	1
2	0018180		Single Source Compliance, Aerials	1
3	0584456		Manufacture Location, Appleton, Wisconsin	1
4	0584452		RFP Location: Appleton, Wisconsin	1
5	0588609		Vehicle Destination, US	1
6	0670275		Unit to be Similar in some Aspects, Excluding Pump Panel	1
			Fill in Blank - Similar to 35299	
7	0610784		Comply NFPA 1901 Changes Effective Jan 1, 2016, With Exceptions	1
8	0533351		Quint Fire Apparatus	1
9	0588612		Vehicle Certification, Aerial w/Pump	1
10	0681278		Agency, Apparatus Certification, Aerial w/Pump, U.L.	1
11	0537375		Unit of Measure, US Gallons	1
12	0030006		Bid Bond Not Requested	1
13	0540326		Performance Bond, Not Requested	1
14	0000007		Approval Drawing	1
15	0002928		Electrical Diagrams	1
16	0615217		Enforcer Chassis, Aerials, Single Axle, Ascendant	1
17	0000110		Wheelbase	1
			Wheelbase - 234"	
18	0000070		GVW Rating	1
			GVW rating - 56,300#	
19	0649713		Frame Rails, 10.25" x 3.50" x .375", Saber FR/Enf	1
20	0620712		Frame Liner, Internal "C", 9.38" x 3.13" x .25", w/Reinforcement,67"Qval,SFR/Enf	1
21	0629940		Axle, Front, Oshkosh TAK-4, Non Drive, 22,800 lb, Enforcer	1
22	0010427		Suspension, Front TAK-4, 22,800 lb, Qtm/AXT/Imp/Vel/DCF/Enf	1
23	0087572		Shock Absorbers, KONI, TAK-4, Qtm/AXT/Imp/Vel/DCF/Enf	1
24	0000322		Oil Seals, Front Axle	1
25	0594821		Tires, Front, Goodyear, G296 MSA, 425/65R22.50, 20 ply	1
26	0019611		Wheels, Front, Alcoa, 22.50" x 12.25", Aluminum, Hub Pilot	1
27	0603826		Axle, Rear, Meritor RS30-185, 33,500 lb, Saber FR/Enforcer	1
28	0602744		Top Speed of Vehicle, Non-NFPA 2016 Compliant	1
			Top Speed of Vehicle - 68	
29	0122073		Suspen, Rear, Standens, Spring, 33,500 lb, Imp/Vel/Dash CF/Enf	1
30	0000485		Oil Seals, Rear Axle	1
31	0585004		Tires, Rear, Goodyear, G289 WHA, 315/80R22.50, 20 ply, Single	1
32	0654750		Wheels, Rear, Alcoa-Accuride, 22.50" x 9.00", Aluminum-Steel, Hub Pilot, Single	1
33	0568081		Tire Balancing, Counteract Beads	1
34	0620570		Tire Pressure Monitoring, RealWheels, AirSecure, Valve Cap, Single Axle	1
			Qty, Tire Pressure Ind - 6	
35	0003245		Axle Hub Covers w/center hole, S/S, Front Axle	1
36	0001960		Axle Hub Covers, Rear, S/S, High Hat (Pair)	1
37	0057936		Covers, Lug Nut, Chrome	1
38	0002045		Mud Flap, Front and Rear, Pierce Logo	1
39	0760616		Chains, Onspot Automatic Tire, Custom, Locking Switch	1
40	0544802		Chocks, Wheel, SAC-44-E, Folding	1
			Qty, Pair - 01	
41	0544806		Mounting Brackets, Chocks, SAC-44-E, Folding, Horizontal	1
			Qty, Pair - 01	
			Location, Wheel Chocks - Left Side Rear Compt	
42	0010670		ABS Wabco Brake System, Single rear axle	1
43	0030185		Brakes, Knorr/Bendix 17", Disc, Front, TAK-4	1

Line	Option	Type	Option Description	Qty
44	0000740		Brakes, Meritor, Cam, Rear, 16.50 x 8.63"	1
45	0020784		Air Compressor, Brake, Cummins/Wabco 18.7 CFM	1
46	0637584		Brake Reservoirs, 5,376 Cubic Inch Minimum Capacity, Saber FR/Enforcer	1
47	0644228		Air Dryer, Wabco System Saver 1200 IWT, Heated, Saber FR/Enforcer	1
48	0000790		Brake Lines, Nylon	1
49	0000854		Air Inlet, w/Disconnect Coupling	1
			Location, Air Coupling(s) - a) DS Step Well, Forward	
			Qty, Air Coupling (s) - 1	
50	0070810		All Wheel Lockup (Aerial/Tanker Chassis)	1
51	0795472		Engine, Cummins L9, 450 hp, 1250 lb-ft, W/OBD, EPA 2017, Saber FR/Enforcer	1
52	0001244		High Idle w/Electronic Engine, Custom	1
53	0687994		Engine Brake, Jacobs Compression Brake, Cummins Engine	1
			Switch, Engine Brake - e) ISC/ISM/ISL9/ISX Hi Med Lo	
54	0644227		Clutch, Fan, Air Actuated, Saber FR/Enforcer	1
55	0640477		Air Intake, Metal Screen, Saber FR/Enforcer	1
56	0794761		Exhaust System, 4", 2017 L9 Engine, Horizontal, Right Side	1
57	0788765		Radiator, Saber FR/Enforcer	1
58	0001090		Cooling Hoses, Rubber	1
59	0001125		Fuel Tank, 65 Gallon, Left Side Fill	1
60	0001129		Lines, Fuel	1
61	0595087		DEF Tank, 4.5 Gallon, DS Fill, Forward of Rear Axle	1
			Door, Material & Finish, DEF Tank - Brushed Stainless	
62	0552793		Not Required, Fuel Priming Pump	1
63	0552712		Not Required, Shutoff Valve, Fuel Line	1
64	0699437		Cooler, Chassis Fuel, Not Req'd.	1
65	0500907		Door, Fuel Fill, Brushed S/S	1
66	0690880		No Selection Required From This Category	1
67	0642572		Trans, Allison 5th Gen, 3000 EVS P, w/Prognostics, Imp/Vel/DCF/SFR/Enf	1
68	0625329		Transmission, Shifter, 5-Spd, Push Button, 3000 EVS	1
69	0684459		Transmission Oil Cooler, Modine, External	1
70	0090176		Mode, Downshift, Aggressive downshift to 3rd, w/engine brake, 5 speed	1
71	0001370		Driveline, Spicer 1710	1
72	0669988		Steering, Sheppard M110 w/Tilt, TAK-4, Eaton Pump, w/Cooler	1
73	0605356		Steering Wheel, 4 Spoke without Controls, Saber FR/Enforcer	1
74	0559647		Pierce Logo on Horn Button	1
75	0012245		Bumper, 19" Extended, Saber FR/Enforcer	1
76	0640197		Tray, Hose, Center, 19" Bumper, Outside Air Horns	1
			Grating, Bumper extension - Grating, Rubber	
			Capacity, Bumper Tray - 20) 125' of 1.75"	
77	0778377	SP	Cover, Aluminum Treadplate, Two (2) Chrome C2 Latches, Hose Tray	1
			Stay arm, Tray Cover - b) Pneumatic Stay Arm	
78	0614646		No Lift & Tow Package, Imp/Vel, AXT, SFR/Enf	1
79	0002270		Tow Hooks, Chrome	1
80	0698960		Coating, Top Flange, Front Bumper, Outside Exterior, Line-X Coating, Black	1
81	0789736		Cab, Enforcer, 7010 w/Notch	1
82	0647919		Engine Tunnel, ISL, Saber FR/Enforcer	1
83	0633594		Rear Wall, Interior, Adjustable Seating	1
84	0632103		Rear Wall, Exterior, Cab, Saber FR/Enforcer	1
			Material, Exterior Rear Wall - Aluminum Treadplate	
85	0644201		Cab Lift, Elec/Hyd, Saber FR/Enforcer	1
86	0695930		Grille, Bright Finished, Front of Cab, Dash CF/Enforcer	1
87	0647932		Not Required, Trim, S/S Band, Across Cab Face, AXT/Dash CF/Saber/Enforcer	1
88	0087357		Molding, Chrome on Side of Cab	1
89	0521669		Mirrors, Retrac, West Coast Style, Htd/Rmt, w/Htd/Rmt Convex	1
90	0648170		Door, Half-Height, Saber FR/Enforcer 4-Door Cab, Raised Roof	1
			Key Model, Cab Doors - 751	
			Cab, Exterior Door Handle, Finish -	
91	0655543		Door Panel, Brushed Stainless Steel, Saber/Enforcer 4-Door Cab	1
92	0630636		Controls, Electric Roll-Up Windows, 4dr, 4 Driver Controls, Saber FR/Enforcer	1
93	0638310		Steps, 4-Door Cab, Saber FR/Enforcer	1
			Step Well Material - Aluminum Treadplate	

Line	Option	Type	Option Description	Qty
94	0770194		Handrail, Exterior, Knurled, Alum, 4-Door Cab	1
95	0634786		Lights, Cab & Crw Cab Acs Stps, P25, LED w/Bezel, 6lts	1
96	0583698		Fenders, S/S on cab, Extra Wide, Saber/Enf	1
97	0637984		Window, Side of C/C, Fixed, Saber FR/Enforcer	1
98	0779033		Not Required, Windows Rear of Crew Cab, Saber FR/Enforcer	1
99	0798597		Holder, Cup, Cab/Crewcab, Each, Loc	2
			Location - install on driver and officer side of engine tunnel. Qty, - 02	
100	0607217		Mounting Provisions, 3/16" Alum, Full Engine Tunnel, Saber FR/Enforcer	1
			Mounting Provision Spacing - 1.00" Material Finish, Cab Interior - Painted	
101	0750824		Cab Interior, Vinyl Headliner, Saber FR/Enforcer, CARE	1
			Color, Cab Interior Vinyl/Fabric - Endure Vinyl - Silver/Gray Engine Tunnel Cover - Dark Silver Gray Endure Vinyl Cab Interior Rear Wall Material - Painted Aluminum	
102	0753903		Cab Interior, Paint Color, Saber FR/Enforcer	1
			Color, Cab Interior Paint - i) fire smoke gray	
103	0052100		Floor, Rubber Padded, Cab & Crew Cab, Saber/Enforcer	1
104	0741237		HVAC, Saber FR, CARE	1
			HVAC System, Filter Access - Removable Panel Auxiliary Cab Heater - Both HVAC System, Control Loc. - Panel Position #12	
105	0639675		Sun Visor, Smoked Lexan, AXT, Imp/Vel, Saber FR/Enforcer	1
			Sun Visor Retention - Thumb Latch	
106	0622887		Grab Handles, Driver Door Post, Officer Door Post Low, Saber FR/Enforcer	1
107	0583938		Lights, Engine Compt, Custom, Auto Sw, Wln 3SC0CDCR, 3" LED, Trim	2
			Qty, - 02	
108	0631830		Fluid Check Access, Saber FR/Enforcer, Arrow XT	1
109	0583042		Side Roll and Frontal Impact Protection	1
110	0622617		Seating Capacity, 6 Seats	1
111	0636955		Seat, Driver, Pierce PSV, Air Ride, High Back, Safety, Saber FR/Enforcer	1
112	0636942		Seat, Officer, Pierce PSV, Fixed, SCBA, Safety, Saber FR/Enforcer	1
113	0620420		Radio Compartment, Below Non-Air Ride Seat, Saber FR/Enforcer	1
114	0635973		Seat, Rear Facing C/C, DS Outboard, Pierce PSV, SCBA, Safety, Saber FR/Enforcer	1
115	0102783		Not Required, Seat, Rr Facing C/C, Center	1
116	0635969		Seat, Rear Facing C/C, PS Outboard, Pierce PSV, SCBA, Safety, Saber FR/Enforcer	1
117	0108189		Not Required, Seat, Forward Facing C/C, DS Outboard	1
118	0783470		Cabinet, Forward Facing, Center, 42 W x 40 H x 24.75 D, Roll, SFR/Enf	1
			Light, Short Cabinet - Pierce, Interior, Right Side Material Finish, Shelf - Painted - Cab Interior Shelf/Tray, Cabinet - (1) Shelf, Adjustable, 0.75" Up-Turned Lip Door, Cab Interior Cabinet - Rollup, ROM Series IV, Int Painted, Non-Locking Louvers, Cabinet - 0-No Louvers	
119	0108190		Not Required, Seat, Forward Facing C/C, PS Outboard	1
120	0766467		Upholstery, Seats In Cab, All Vinyl, Seats Inc, CARE	6
			Color, Cab Interior Vinyl/Fabric - Endure Vinyl - Silver/Gray Qty, - 06	
121	0543991		Bracket, Air Bottle, Hands-Free II, Cab Seats	5
			Qty, - 05	
122	0603866		Seat Belt, Dual Retractor, ReadyReach, Saber FR/Enforcer	1
			Seat Belt Color - Red	
123	0602464		Helmet Storage, Provided by Fire Department, NFPA 2016	1
124	0647647		Lights, Dome, FRP Dual LED 4 Lts	1
			Color, Dome Lt - Red & White Color, Dome Lt Bzl - Black Control, Dome Lt White - Door Switches and Lens Switch Control, Dome Lt Color - Lens Switch	
125	0602622		Portable Hand Light, Provided by Fire Department, Quint NFPA 2016 Classification	1
126	0622803		Cab Instruments, Black Gauges, Black Bezels, Enforcer MUX	1
			Emergency Switching - Individual Switches	

Line	Option	Type	Option Description	Qty
127	0509511		Air Restriction Indicator, Imp/Vel, AXT, Dash CF, Enf MUX	1
128	0543751		Light, Do Not Move Apparatus	1
			Alarm, Do Not Move Truck - Pulsing Alarm	
129	0509042		Messages, Open Dr/DNMT, Color Dsply,	1
130	0622798		Switching, Cab Instrument Lower Console & Overhead, Rocker MUX, Enforcer	1
131	0644179		Wiper Control, 2-Speed with Intermittent, Saber FR/Enforcer	1
132	0002565		Hourmeter, Aerial Inside Cab	1
133	0002615		Switch, Aerial 12V Master	1
134	0002617		PTO switch, w/light - aerial	1
135	0797189		Wiring, Spare, 4.8 A 12V DC, USB Termination Blue Sea 1045 1st	2
			Qty, - 02 12vdc power from - Battery direct Location - Officer Dash	
136	0743033		Bin, Center Dash Console	1
137	0615386		Vehicle Information Center, 7" Color Display, Touchscreen, MUX	1
			System Of Measurement - US Customary	
138	0734854		Collision Mitigation, Not Requested	1
139	0606249		Vehicle Data Recorder w/CZ and Overhead Display Seat Belt Monitor	1
140	0734999		Intercom, David Clark, 4-Pos, 2-Radio, D, O, 2ibC, U3805	1
			Location, Intercom, C Cab - 2) 2 inboard forward facing seats	
141	0637058		David Clark Universal Radio Interfaces Included with Single/Dual System	1
			Location, Radio Interface - in overhead console	
142	0597914		Headset, David Clark, H3442 Under Helmet, Flex Mic	4
			Qty, - 04 Location - Each Seat Location in Cab	
143	0681408		Hangers For Headsets, NFPA, Each	4
			Qty, - 04 Location, Headset Hangers - Driver Seat, Officer Seat, DS Inbrd, Fwrd Fcng Seat and PS Inbrd, Fwrd Fcng Seat	
144	0696439		Antenna Mount, Custom Chassis, Cable Routed to Instrument Panel Area	1
			Qty, - 01 Location, Antenna Mount - Right Side	
145	0653526		Camera, Pierce, Driver Mux, Rear Camera Only	1
			Camera System Audio - Not Provided	
146	0615112		Pierce Command Zone, Advanced Electronics & Control System, Enforcer, WiFi	1
147	0624253		Electrical System, Enforcer MUX	1
148	0079166		Batteries, (4) Exide Grp 31, 950 CCA ea, Threaded Stud	1
149	0008621		Battery System, Single Start, All Custom Chassis	1
150	0002698		Battery Compartment, Saber/Enforcer	1
151	0531315		Charger, Sngl Sys, IOTA, DSL-75, 75 Amp, Kussmaul 091-94-12 Ind, Qtm/Enf/SFR	1
152	0662220		Location, Charger, Cab Behind Driver Seat, Dash CF/Saber FR/Enf	1
153	0530951		Location, Bat Chrg Ind, DS Behind Cab Door	1
154	0016857		Shoreline, 20A 120V, Kussmaul Auto Eject, 091-55-20-120, Super	1
			Qty, - 01 Color, Kussmaul Cover - b) red Shoreline Connection - Battery Charger	
155	0026800		Shoreline Location	1
			Location, Shoreline(s) - DS Cab Side	
156	0647729		Alternator, 320 amp, Delco Remy 40SI	1
157	0092582		Load Manager/Sequencer, MUX	1
			Enable/Disable Hi-Idle - e)High Idle enable	
158	0783157		Headlights, Rect LED, JW Spkr Evo 2, Heat, AXT/DCF/Enf/Imp/Sab/Vel	1
			Color, Headlight Bez - Chrome Bezel	
159	0775055		Light, Directional, Wln C6T* LED Arrow, Common Bzl, Above Headlts, Sab/Enf	1
			Color, Lens, LED's - Clear	
160	0620054		Light, Directional/Marker, Intermediate, Weldon 9186-8580-29 LED 2lts	1
161	0647800		Lights, Clearance/Marker/ID, Front, Truck-Lite 35375Y LED 5 Lts, Saber FR/Enf	1
			Light Guard - With Guard	
162	0647899		Lights, Directional/Marker, Cab Front Side, Weldon 9186-8580-29 LED, Sab/Enf	1
163	0090155		Lights, Clearance/Marker/ID, Rear, Truck-Lite 35200R LED 7Lts	1
164	0602938		Light, Marker End Outline, Rubber Arm, LED Marker Lamp, Rear Body	1
			Qty, Lights, Pair - 1	
165	0517025		Lights, Tail, Wrap-around, Stop/Tail, Turn & Backup LED, Tri-Cluster	1

Line	Option	Type	Option Description	Qty
166	0085910		Lights, Backup Included in Signal Cluster	1
167	0664481		Bracket, License Plate & Light, P25 LED	1
168	0589905		Alarm, Back-up Warning, PRECO 1040	1
169	0769420		Lights, Perimeter Cab, Amdor AY-LB-12HW020 LED 4Dr	1
170	0769564		Lights, Perimeter Pump House, Amdor AY-LB-12HW020 LED 1lt	1
171	0768765		Lights, Perimeter Body, Amdor AY-LB-12HW020 LED 2lts, Turntable Access	1
			Control, Perimeter Lts - Parking Brake Applied	
172	0554198		Lights, Step, P25 LED, Aerial With Pump 2Lts, Pump Pnl Sw	1
173	0620741		Light, HiViz FT-B-46-*, 46", 2nd	1
			Location, Lights - centered over compartment RS2, on catwalk.	
			Qty, - 01	
			Control, Scene Lts - Cab Sw Panel DS	
			Color, Lt Housing HiViz - White	
			Scene Light Optics - Flood/Spot	
174	0640991		Light, Wln, 12V PCPSM2* Pioneer LED Fld/Spt, Surface Mnt 1st	1
			Location, Lights - ahead of driver side crew cab door, high as possible.	
			Qty, - 01	
			Switch, Lt Control 1 DC,1 - a) DS Switch Panel	
			Switch, Lt Control 2 DC,2 - e) No Control	
			Switch, Lt Control 3 DC,3 - d) No Control	
			Switch, Lt Control 4 DC,4 - d) No Control	
			Color, Wln Lt Housing - Chrome Flange	
175	0640941		Light, Wln, 12V PCPSM2* Pioneer LED Fld/Spt, Surface Mnt 2nd	1
			Location, Lights - ahead of passenger side crew cab door, high as possible.	
			Qty, - 01	
			Switch, Lt Control 1 DC,1 - a) DS Switch Panel	
			Switch, Lt Control 2 DC,2 - e) No Control	
			Switch, Lt Control 3 DC,3 - d) No Control	
			Switch, Lt Control 4 DC,4 - d) No Control	
			Color, Wln Lt Housing - Chrome Flange	
176	0620745		Light, HiViz FT-B-46-*, 46", 1st	1
			Location, Lights - centered over compartment LS2, on catwalk.	
			Qty, - 01	
			Control, Scene Lts - Cab Sw Panel DS	
			Color, Lt Housing HiViz - White	
			Scene Light Optics - Flood/Spot	
177	0776357		Light, Visor, Wln, 12V P*H2* Pioneer, Cnt Feature, 1st	1
			Qty, - 01	
			Location, driver's/passenger's/center - Centered	
			Color, Wln Lt Housing - White Paint	
			Control, Scene Lts - Cab Sw Panel DS	
			Scene Light Optics - Flood/Spot	
178	0565198		Not Required, Deck Lights, Other Hose Bed & Rear Lighting, Aerial	1
179	0645877		Lights, Hose Bed, Sides, Dual LED Light Strips	1
			Control, Hose Bed Lts - Cup Switch At Rear	
180	0645678		Lights, Not Required, Rear Work, Alt. 120/240 Volt Lights At Rear Body	1
181	0645611		Lights, Rear Scene, FRC, SPA900-Q70, Surface Mt, 1st	2
			Location, Lights - rear of truck, one each side, mounted high	
			Qty, - 02	
			Control, Rear Scene Lts - Cab Switch Panel DS and Body Switch, DS Rear Bulkhead	
182	0709438		Light, Walking Surf, FRP Flood, LED	1
183	0624713		Aerial, HD Ladder 107' ASL Single, Quint, Alum Body	1
184	0554271		Body Skirt Height, 20"	1
185	0601008		Tank, Water, 500 Gallon, Poly, Ascendant Single Axle	1
186	0003405		Overflow, 4.00" Water Tank, Poly	1
187	0028104		Foam Cell Required	1
188	0553729		Not Required, Restraint, Water Tank, Heavy Duty	1
189	0003429		Not Required, Direct Tank Fill	1
190	0624711		Hose Bed, Alum, LS/RS, Ascendant Single Axle	1
191	0003491		Hose Bed Capacity 1000' of 5.00", Ascendant, PAP, PAL	1
192	0604069		Hose Restraint, Two (2) Hose Beds, Aerial, Front Strap, 1" Heavy Nylon Web Rear	1
193	0003512		Running Boards, Ascendant, PAL	1

Line	Option	Type	Option Description	Qty
194	0735737		Turntable Steps, Swing-Down, LS/RS, Ascendant Single Axle	1
			Step, Flip - Flip Step, Two Step Assembly	
			Body Handrail Finish - knurled aluminum	
			Step Retention - lift bar latching mechanism	
			Step Surface, Turntable - Punched Grip	
195	0554004		Lights, Step (6), P25 LED, Swing Down Access Steps, Each Side	1
196	0690023		Wall, Rear, Smooth Aluminum	1
197	0074515		Tow Eyes (2), 100AAT, Ascendant Single Axle, 75' HAL	1
198	0624701		Construction, Compt, Alum, 3rd Gen, Ascendant Single Axle	1
199	0624699		Compt, LS F/H, Roll Drs, Ascendant Single Axle	1
200	0624694		Compt, LS Turntable, F/H, Roll Dr, Ascendant Single Axle	1
201	0023672		Compt, IPO Stairs, Not Required, LS	1
202	0624693		Compt, RS F/H, Roll Drs, Ascendant Single Axle	1
203	0624692		Compt, RS Turntable, F/H, Roll Dr, Ascendant Single Axle	1
204	0023673		Compt, IPO Stairs, Not Required, RS	1
205	0786250		Compt, Rear, ROM Series IV Rollup Door, Ascendant Single Axle	1
			Color, Roll-up Door - ROM Series IV Satin Finish	
			Latch, Roll-up Door - Non-Locking Liftbar	
206	0787712		Doors, ROM Series IV Rollup, Side Compartments	6
			Qty, Door Accessory - 06	
			Color, Roll-up Door - ROM Series IV Painted to Match Lower Body	
			Latch, Roll-up Door - Non-Locking Liftbar	
207	0624690		Bumper, Rear, Aluminum Rub Rail, Ascendant Single Axle	1
208	0603086		Lights, Compt, Pierce LED, Dual Light Strips, Each Side of Door, Ascendant SA	7
			Qty, - 07	
			Location, Compartment Lights - All Body Compts	
209	0687145		Shelf Tracks, Recessed, PUC/3rd Generation	1
210	0600289		Shelves, Adj, 500 lb Capacity, Full Width/Depth, Predefined Locations, Aerial	6
			Qty, Shelf - 06	
			Material Finish, Shelf - Painted - Spatter Gray	
			Location, Shelves/Trays, Predefined - RS2-Centered, RS3-Upper Third, RS1-Upper Third, LS2-Centered, LS3-Upper Third and LS1-Upper Third	
211	0603179		Tray, Floor Mounted, Slide-Out, 500lb, 2.00" Sides, 3G, Ascendant Single Axle	4
			Qty, - 04	
			Location, Tray Slide-Out, Floor Mounted - RS1, RS3, LS1 and LS3	
			Material Finish, Tray - Painted - Spatter Gray	
212	0050308		Rear of Body, Smooth Aluminum Sheet	1
213	0061917		Rub Rail, Aluminum Extruded, 3.12", Side of Body	1
214	0565606		Fender Crowns, Rear, S/S, w/Removable Fender Liner, Aerial, 3rd Gen	1
215	0519849		Not Required, Hose, Hard Suction	1
216	0626229		Handrails, Side Pump Panels, Per Print	1
217	0004150		Handrail, Extra - 15-20" Long	4
			Qty, Handrails - 04	
			Location, Handrail Additional - on boom support 4-way aluminum privacy panel ahead of pump panel to help access crosslays, two at rear of truck, one each side for the recessed camper style steps.,	
218	0074030		Compt, Air Bottle, Dbl, in Fender Panel, Alum, 3rd Gen.	4
			Qty, Air Bottle Comp - 4	
			Location, Air Bottle - (1) LS Ahead Rr Wheel, (1) LS Behind Rr Wheel, (1) RS Ahead Rr Wheel and (1) RS Behind Rr Wheel	
			Door Finish, Fender Compt - Brushed	
			Latch, Air Bottle Compt - Southco C2 Chrome Raised	
			Insert, Air Bottle Compt - Rubber Matting	
219	0004220		Ladder, 35' Duo-Safety 1225-A 3-Sect	1
220	0600821		Ladder, 24' Duo-Safety 900A 2-Section, Ascendant Single Axle, 75' HAL	1
			Qty, - 01	
			Location, Extension Ladder - ladder storage	
221	0004232		Ladder, (2) 16' Duo-Safety 875A Roof	1
222	0648681		Ladder, 14' Duo-Safety 875-DR Roof	1
			Qty, - 01	
			Location - behind boom sign driver side of aerial ladder.	
223	0024233		Not Required, Attic Extension Ladder	1

Line	Option	Type	Option Description	Qty
224	0600819		Ladder, 10' Duo-Safety Folding, 585A, Ascendant Single Axle, 75' HAL	1
			Qty, - 01 Location, Folding Ladder Aerial - ladder storage	
225	0624687		Ladders Stored at Rear, Ascendant Single Axle, Smooth Aluminum Doors	1
226	0600674		Lights, Torque Box Ladder Storage, Not Required, Ascendant Single, 75' HAL	1
227	0004998		Pike Pole, 12' Nupla, Fiberglass, I Beam, SPD-12	2
			Qty, - 02	
228	0024337		Pike Pole, 8' Nupla, Featherlight, Aerial	2
			Qty, - 02	
229	0044348		Pike Pole, 6' Nupla, I Beam, Aerial	2
			Qty, - 02	
230	0638907		Pike Pole, 3', Quint, Provided by Fire Department, NFPA	2
			Qty, - 02 Pike Pole Make/Model - Akron 3' Pike Pole	
231	0770578		Pike Pole Tubes, in Torque Box/Ladder Storage, ABS	6
			Qty, - 06	
232	0593075		Steps, Folding, Front Bulkheads (Aerial), w/LED, Trident	1
			Coating, Step - black	
233	0760980		Step, Recessed Camper Style, Pull-Out & Drop Down, Ascendant SA Rear Wall	2
			Qty, - 02 Location, driver's/passenger's/center - Left & Right Light, Short Step - Amdor Lumabar Light, Step, Additional - P25 LED	
234	0591914		Step, Folding - Extra, Body Only, Black, w/LED, Trident	3
			Qty, Folding Step - 03 Location, Steps Additional - LS Front Bulkhead - 1 and RS Front Bulkhead - 2	
235	0559082		Steps, Stirrup Style, Imp/Vel Cab Style, Each	1
			Location, Additional Step - under passenger side running board Qty, - 01 Light, Step, Additional - P25 LED	
236	0620530		Pump House, Side Control, 52", Control Zone, Aerial	1
237	0035501		Pump House Structure, Std Height	1
238	0004435		Pump, Waterous, CSU, 2000 GPM, Single Stage	1
239	0004481		Seal, Grafoil, Waterous	1
240	0559769		Trans, Pump, Waterous C20 Series	1
241	0635600		Pumping Mode, Stationary Only	1
242	0605126		Pump Shift, Air Mnl Override, Split Shaft, Interlocked, Waterous	1
243	0003148		Transmission Lock-up, EVS	1
244	0004547		Auxiliary Cooling System	1
245	0014486		Not Required, Transfer Valve, Stage Pump	1
246	0777650		Valve, Relief Intake, Akron	1
			Pressure Setting - 125 psig Intake Relief Valve Control - Behind Right Side Pump Panel	
247	0564941		Controller, Pressure, FRC, Pump Boss, PBA200	1
248	0072153		Primer, Trident, Air Prime, Air Operated	1
249	0780364		Manuals, Pump, (2) Total, Electronic Copies	1
250	0899875	SP	Pump Test, Third Party, 2000 GPM Pump Will Be Rated at 1500 GPM	1
251	0602512		Plumbing, Stainless Steel and Hose, Single Stage Pump, Control Zone	1
252	0795135		Plumbing, Stainless Steel, w/Foam System	1
253	0004645		Inlets, 6.00" - 1250 GPM or Larger Pump	1
254	0004646		Cap, Main Pump Inlet, Long Handle, NST, VLH	1
255	0084610		Valves, Akron 8000 series- All	1
256	0016158		Valve, Inlet(s) Recessed, Side Cntrl, "Control Zone"	1
			Qty, Inlets - 1	
257	0004700		Control, Inlet, at Valve	1
258	0004660		Inlet (1), Left Side, 2.50"	1
259	0029147		Not Required, Inlet, Right Side	1
260	0031272		Adapter, Aux. Inlet, 2.5" MNST x 2.5" F Special Thread VLH	1
			Special Threads - 3.234 x 6 Qty, Adapter for Inlet - 1	
261	0092569		No Rear Inlet (Large Dia) Requested	1
262	0064116		No Rear Inlet Actuation Required	1

Line	Option	Type	Option Description	Qty
263	0092696		Not Required, Cap, Rear Inlet	1
264	0009648		No Rear Intake Relief Valve Required on Rear Inlet	1
265	0586174		Provision, Front Inlet	1
266	0092568		No Rear Auxiliary Inlet Requested	1
267	0563738		Valve, .75" Bleeder, Aux. Side Inlet, Swing Handle	1
268	0029043		Tank to Pump, (1) 3.00" Valve, 3.00" Plumbing	1
269	0004905		Outlet, Tank Fill, 1.50"	1
270	0062133		Control, Outlets, Manual, Pierce HW if applicable	1
271	0004940		Outlet, Left Side, 2.50"	1
			Qty, Discharges - 01	
272	0008475		Elbow, Left Side Outlets, 45 Degree, 2.50" FNST x 2.50" Male Special Thread,VLH	1
			Qty, Discharges - 01 Special Threads - 3.234 x 6	
273	0092570		Not Required, Outlets, Left Side Additional	1
274	0035094		Not Required, Elbow, Left Side Outlets, Additional	1
275	0004945		Outlet, Right Side, 2.50"	1
			Qty, Discharges - 01	
276	0008385		Elbow, Right Side Outlets, 45 Degree, 2.50" FNST x 2.50" Male Special Thread,VLH	1
			Qty, Discharges - 01 Special Threads - 3.234 x 6	
277	0550252		Outlet, Right Side, 4" w/3" Plumbing, Handwheel Control, (added)	1
278	0035102		Elbow, Right Side Outlets, 45 Degree, 3.00" FNST x 2.50" MNST, VLH, Additional	1
			Qty, Discharges - 01	
279	0029137		Not Required, Outlet, Large Diameter	1
280	0007308		Not Required, Elbow, Large Diameter Outlet	1
281	0649939		Outlet, Front, 1.50" w/2" Plumbing	1
			Fitting, Outlet - 1.50" NST with 90 degree swivel Drain, Front Outlet - Automatic Location, Front, Single - in center bumper tray	
282	0092575		Not Required, Outlet, Rear	1
283	0045099		Not Required, Elbow, Rear Outlets	1
284	0092574		Not Required, Outlet, Rear, Additional	1
285	0085695		Not Required, Elbow, Rear Outlets, Large, Additional	1
286	0092573		Not Required, Outlet, Hose Bed/Running Board Tray	1
287	0752096		Caps/Plugs for 1.00" to 3.00" Discharges/Inlets, Vinyl Covered Cable	1
288	0563739		Valve, 0.75" Bleeder, Discharges, Swing Handle	1
289	0005085		Adapter, Thread - 2.50" FNST X 2.50" M Special	2
			Qty, Adapter for Outlets - 02 Special Threads - 3.234 x 6 Location, Adapter(s) - Aerial Platform Outlet and the 2.5" Crosslay	
290	0029106		Not Required, Deluge Outlet	1
291	0029302		No Monitor Requested	1
292	0029304		No Nozzle Req'd	1
293	0029107		No Deluge Mount	1
294	0047583		Waterway Outlet & Control, 4" Akron, Handwheel	1
295	0029167		Crosslays Sngl Sheet Unpainted, (2+) 1.50", Std. Cap	2
			Qty, Crosslays - 2	
296	0090442		Crosslays Sngl Sheet Unpainted, (1) 2.50" Std Cap	1
297	0623374		Hose Restraint, Crosslays, 2" Nylon Web, Seat Belt Buckle, Tether, Bar, Sides	3
			Qty, - 03 Color, Strap - Orange	
298	0029260		Not Required, Speedlays	1
299	0750536		Hose Restr, Spdly, Not Required, No Spdly	1
300	0590891		Hose Restraint, Crosslay/Deadlay, Velcro Straps, Top	3
			Qty, - 03	
301	0739010		Plumbing for Future Foam Sys, Husky 3/12 Single Agent	1
			Fill in Blank - Three crosslays, front bumper outlet.	
302	0012126		Not Required, CAF Compressor	1
303	0552517		Not Required, Refill, Foam Tank	1
304	0031896		Demonstration, Foam System, Dealer Provided	1

Line	Option	Type	Option Description	Qty
305	0005446		Foam Cell, 20 Gallon, Not Reduce Water	1
			Type of Foam - Class "A"	
306	0091036		Drain, 1.00" Foam Tank #1	1
307	0091079		Not Required, Foam Tank #2	1
308	0091112		Not Required, Foam Tank #2 Drain	1
309	0738072		Approval Dwg, Pump Panel(s), Not Required	1
310	0032479		Pump Panel Configuration, Control Zone	1
311	0562698		Step, Slide-Out/Fold-Out, Pump Operator Platform, Aerial	1
312	0667186		Light, Slide-Out Pump Operator Step, On Scene Solutions Access LED, Short Step	1
313	0629252		Material, Pump Panels, Side Control Black Vinyl	1
			Material Finish, Pump Panel, Side Control - Black Vinyl	
			Material, Pump Panel, Side Control - Aluminum	
314	0005578		Panel, Pump Access - Right Side Only, Side Control	1
315	0583824		Light, Pump Compt, Wln 3SC0CDCR LED White	2
			Qty, - 02	
316	0586382		Gauges, Engine, Included With Pressure Controller	1
317	0005601		Throttle, Engine, Incl'd w/Press Controller	1
318	0739224		Indicator Light @ Pump Panel, Throttle Ready, Incl w/Pressure Gov/Throttle,Green	1
319	0549333		Indicators, Engine, Included with Pressure Controller	1
320	0745568		Indicator Light, Pump Panel, Ok To Pump, Green	1
321	0511078		Gauges, 4.00" Master, Class 1, 30"-0-600psi	1
322	0511100		Gauge, 2.00" Pressure, Class 1, 30"-0-400psi	1
323	0062586		Gauge, Water Level, Class 1, Pierce Std	1
324	0659235		Provision for Gauge, Foam Level, (1) Tank, Class 1, Future Foam Sys, Stock Unit	1
325	0593161		Light Shield, S/S LED	1
326	0606697		Air Horns, (2) Grover, In Bumper	1
327	0606834		Location, Air Horns, Bumper, Each Side, Outside Frame, Inboard (Pos #2 & #6)	1
328	0006063		Control, Air Horn, Horn Ring, PS Foot Sw	1
329	0533071		Siren, Wln 295SLSC1, 100 or 200 Watt, w/Plug-in/Detachable Microphone Cord	1
330	0015283		Location, Elect Siren	1
			Location - Switch panel number 3	
331	0693305		Control, Elec Siren, PS Push Button and Siren Head	1
			Location - in easy reach of officer	
332	0601306		Speaker, (1) Wln, SA315P, w/Pierce Polished Stainless Steel Grille, 100 watt	1
			Connection, Speaker - siren head	
333	0601565		Location, Speaker, Frt Bumper, Recessed, Center (Pos 4)	1
334	0675701		Siren, Federal Q2B, Prk Brk Interlock, PMFD	1
335	0006095		Siren, Mechanical, Mounted Above Deckplate	1
			Location, Siren, Mech - a) Left	
336	0026163		Control, Mech Siren, DS & PS Foot Sw	1
337	0736164		Sw, Siren Brake, Momentary, LS Overhead Sw Pnl	1
338	0606715		Lightbar, Wln, Freedom IV-Q, 2-21.5", RRRRR RRRRR	1
			Filter, Whl Freedom Ltbrs - No Filters	
339	0691599		Light, GTT, 792* Strobe Opticom Emitter, Remote Mounted on Cab Roof	1
			Location - Drivers side of Aerial	
			Opticom Priority - b) High	
			Opticom Activation - Cab Switch & E-Master	
			Momentary Opticom Activation - no activation	
340	0016380		No Additional Lights Req'd, Side Zone Upper	1
341	0540384		Lights, Front Zone, Wln M6*C LED, Clear Lens, in Common Bzl	1
			Color, Lt DS Front - Red	
			Color, Lt PS Front - Red	
342	0558676		Daytime Running Lights, Headlights, Qtm, Vel/Imp, Enf/AXT-MUX, DCF (Low Beam)	1
343	0653937		Flasher, Headlight Alternating	1
			Headlt flash deactivation - a)w/high beam	
344	0540692		Lights, Side Zone Lower, Wln M6*C LED, Clear Lens, 3pr, Ovr 25	1
			Location, Lights Front Side - b)each side bumper	
			Color, Lt Side Front - Red	
			Color, Lt Side Middle - Red	
			Color, Lt Side Rear - Red	
			Location, Lights Mid Side - Over Front Wheels	
			Location, Lights Rear Side - Over Rear Wheels	

Line	Option	Type	Option Description	Qty
345	0540783		Lights, Rear Zone Lower, Wln M6*C LED	1
			Color, Lt DS Rear - r) DS Rear Lt Red	
			Color, Lt PS Rear - r) PS Rear Lt Red	
346	0088745		Light, Rear Zone Up, Wln L31HRFN LED Beacon, Red LED	1
			Color, Dome, Rear Warning - j) both domes clear	
347	0006551		Not Required, Lights, Rear Upper Zone Blocking	1
348	0791501		Light, Traffic Directing, Wln TAL65, 36" Long LED, Aerials	1
			Activation, Traffic Dir L - Not Connected	
349	0530074		Location, Traf Dir Lt, On Top of Body Below Turntable w/Trdplt Box	1
350	0530282		Location, Traf Dir Lt Controller, Overhead Switch Panel DS Right End	1
351	0519934		Not Required, Brand, Hydraulic Tool System	1
352	0649736		Not Required, Hydraulic Tools	1
353	0755098		Aerial, 107' ASL Single Axle, 750/500 Tip, 35 MPH Wind	1
354	0000042		Boom Support, Rear of the Chassis Cab	1
355	0762413		Light, Boom Support, Amdor AY-LB-12HW012, 12" LED	1
356	0799571		Provision for Boom Support Compartment, Stock Unit Only	1
357	0680820		Boom Panel, One, Sized to Match Opposite Side Box	1
			Location, Aerial Device - left side	
			Paint Color, Predefined - #10 white	
358	0526890		Not Required, Indicator, Extension	1
359	0591645		Steps, Folding, Four, Aerial Device, Trident	1
			Coating, Step - black	
360	0688232		Rung Covers, Aerial Device	1
			Rung Cover Color - Safety Yellow	
361	0786841		Brackets Only, Roof/Fresno Ladder, Base Section, Inboard of Boom Panel	1
			Qty, - 01	
			Location, Aerial Device - left side	
			Roof Ladder, Make/Model, Multi-Select - 14' Duo-Safety 875-A-DR	
362	0623645		Aerial Stability Test, Max Tip Options	1
363	0678896		Box, Stokes/Backboard Storage, w/Cover, Base Section, In Place of Boom Panel	1
			Qty, - 01	
			Size - Stokes Basket 86" L X 24" W X 8" D, Backboard size will be 72" L X 18" W X 2" D	
			Finish - Painted, Aerial Device/Job Color Boom Panel	
			Latch, Door, Storage - Rubber Hood w/ Gas Shock	
			Location, Aerial Device - right side	
			Louvers - no louvers	
364	0601972		Lights, Turntable Walkway, P25, LED	1
365	0601949		Light, Turntable Console, TecNiq T-10, LED Strip Light	1
366	0624684		Control Stations, ASL Single Axle, MUX, Color Display	1
367	0743299		Remote Tip Controls, ASL/105' MUX	1
368	0606235		Remote Pump Panel Control, Ladder, 105' MUX/ASL	1
369	0624682		Stabilizers, One Set, Ascendant Single Axle	1
			Material, Stabilizer Pad - Composite	
370	0780907		Doors,Stabilizer Control Box,Ascend Single MUX,Hinged Outbrd,Latch FV,SmoothAlum	1
			Latch, Door, Storage - Southco C2 Chrome Raised	
371	0615058		Stabilizer Placement, Cameras w/Command Zone Color Display, 1 Set	1
372	0540533		Stabilizer Pans, Material	1
			Stabilizer Panels - Brushed Stainless Steel	
373	0624678		Hydraulic System, Ascendant Single Axle	1
374	0615180		Swivels, w/Encoder, ASL Single Axle, (28 Collector Rings)	1
375	0624676		Electrical System, ASL Single Axle, MUX	1
376	0709376		Lights, Wln MPB* Micro LED, Trk & Tip, 4lts (PAL/HAL)	1
			Location, Sw, Arl DC Lts - w) 1 location	
			Color, Wln Lt Housing - White Paint	
377	0653677		Lighting, Rung, LED, TecNiq, 4 Section, Base, Lower/Upper Mid, Fly	1
			Control, Aerial Rung Lighting - Turntable Sw w/Master Batt Sw	
			Color, Lt Aerial Fly Sect - Red	
			Color, Lt Aerial Base Sect - Red	
			Color, Lt Aerial Lower Mid Sect - Red	
			Color, Lt Aerial Upper Mid Sect - Red	

Line	Option	Type	Option Description	Qty
378	0540737		Lights, Stabilizer Warn (1) Set, Wln M6*C LED, Clear Lens	1
			Color, Lt Rr Stabilzr Pan - r) Pan Light Red	
379	0617469		Lights, Wln T0R00FRR LED 2", Stabilizer Beam (1) Set, Ascendant	1
380	0768550		Lights, Stabilizer Scene, Amdor AY-LB-12HW012, 12", 3lts LED, Ascendant Single	1
381	0006929		Not Required, 120v To Tip	1
382	0006920		Intercom, 2-Way Atkinson (PAL)	1
383	0540895		Not Required, Breathing Air to Tip, Aerial Ladder	1
384	0024742		Not Required, Mask, Breathing Air To Tip	1
385	0610887		Aerial Pedestal, Ascendant Single Axle	1
386	0604457		Lifting Eye Assembly, Rope Rescue Attachment, ASL	1
387	0530826		Turntable Access, ManSaver Bars, Yellow	1
388	0624672		Waterway, High Flow, 1500 GPM, ASL	1
389	0763377		Monitor, Akron 3486 StreamMaster II Electric w/Extended Vertical Travel, w/AVM	1
			Nozzle, Monitor 1 PAL - Akron 5178 Electric 1500 gpm	
390	0010758		Flow Meter, Waterway, PAL, 110' Ascendant, MUX	1
391	0624671		Inlet, 5.00" w/5.00" Aluminum, Plumbing at Rear, w/Pump, Ascendant Single Axle	1
392	0673128		Quick-Lock Waterway Locking System, 100' HDL, 105' HDL, ASL	1
393	0764783		Valve, (1) Akron AVM (Aerial Valve Manifold), S2 Left Discharge, Manual, Ladder	1
394	0047897		Tools, Aerial	1
395	0559494		Manuals and Training, 3 Consecutive Days, Ascendant Ladder, PAL	1
396	0007150		Bag of Nuts and Bolts	1
			Qty, Bag Nuts and Bolts - 1	
397	0047021		Reflective Emergency Triangles, Set of Three	1
			Qty, - 1	
398	0602497		NFPA Required Loose Equipment, Quint, NFPA 2016, Provided by Fire Department	1
399	0602397		Soft Suction Hose, Provided by Fire Department, Quint NFPA 2016 Classification	1
400	0027023		No Strainer Required	1
401	0533246		Extinguisher, 20 lb Dry Chemical	1
			Qty, Extinguishers - 1	
402	0602352		Extinguisher, 2.5 Gal. Pressurized Water, Quint, NFPA 2016,Provided by Fire Dept	1
403	0007482		Not Required, Crowbars	1
404	0007484		Not Required, Claw Tools	1
405	0602883		Axe, Flathead, Quint NFPA 2016, Provided by Fire Department	1
406	0602670		Axe, Pickhead, Quint NFPA 2016, Provided by Fire Department	1
407	0007494		Not Required, Sledgehammers	1
408	0559685		Paint, Two Tone, Cab, Custom Cab	1
			Paint Color, Predefined - #90 Red	
			Paint Color, Upper Area, Predefined - #10 White	
409	0646901		Paint Chassis Frame Assy, With Liner, E-Coat, Standard	1
			Paint Color, Frame Assembly, Predefined - Gloss Black	
410	0693797		No Paint Required, Aluminum Front Wheels	1
411	0687653		Paint, Rear Wheels, Single Axle, Alum-Stl	1
			Paint, Wheels - Black #101	
412	0007230		Compartment, Painted, Spatter Gray	1
413	0792617		Aerial Ladder Paint, ASL-Single Axle, E-Coat	1
			Paint Color, Aerial Device - White 10	
			Paint Color, Egress - #90 Red	
			Paint Color, Turntable - White 10	
			Paint Color, Boom Support - red 90	
			Paint Color, Cylinders - white 10	
			Paint Color, Aerial Control Console - white 10	
414	0544124		Reflective Band, 1"-4"-1"	1
			Color, Reflect Band - A - i) gold	
			Color, Reflect Band - B - p) black	
			Color, Reflect Band - C - ze) gold	
415	0007356		Reflective across Cab Face	1
416	0624670		Stripe, Chevron, Rear, Diamond Grade, Aerial, Ascendant Single Axle	1
			Color, Rear Chevron DG - fluorescent yellow green	
417	0598754		Stripe, Reflective/Diamond Grade, 4.00" on Stabilizers	1
			Color, Reflect Band - A - p) fluorescent yellow green diamond grade	
418	0027341		Jog, In Reflective Stripe, Single or Multiple	1
			Qty, - 1	

Line	Option	Type	Option Description	Qty
419	0593225		Stripe, Reflective, Cab Doors Interior, Diamond Grade	1
			Color, Reflect Band - A - p) fluorescent yellow green diamond grade	
420	0027372		Lettering Specifications, (GOLD STAR Process)	1
421	0686434		Lettering, Gold Leaf, 3.00", (21-40)	1
			Outline, Lettering - Outline and Shade	
422	0685985		Lettering, Reflective, 12.00", Each	4
			Qty, Lettering - 04	
			Outline, Lettering - Outline and Shade	
423	0686256		Lettering, Gold Leaf, 4.00", Each	16
			Qty, Lettering - 16	
			Outline, Lettering - Outline and Shade	
424	0686033		Lettering, Reflective, 4.00", Each	15
			Qty, Lettering - 15	
			Outline, Lettering - Outline and Shade	
425	0686214		Lettering, Gold Leaf, 8.00", (1-20)	1
			Outline, Lettering - Outline and Shade	
426	0685977		Lettering, Reflective, 20.00", Each	2
			Qty, Lettering - 02	
			Outline, Lettering - Outline and Shade	
427	0685978		Lettering, Reflective, 18.00", Each	8
			Qty, Lettering - 08	
			Outline, Lettering - Outline and Shade	
428	0583547		Undercoating, Cab & Body, Stock/Demo Style, Aerial, Ziebart	1
429	0772003		Manual, Fire Apparatus Parts, USB Flash Drive, Custom	1
			Qty, - 01	
430	0772037		Manual, Chassis Service, USB Flash Drive, Custom	1
			Qty, - 01	
431	0772065		Manual, Chassis Operation, (2) USB Flash Drives, Custom	1
432	0030008		Warranty, Basic, 1 Year, Apparatus, WA0008	1
433	0696698		Warranty, Engine, Cummins, 5 Year, WA0181	1
434	0684953		Warranty, Steering Gear, Sheppard M110, 3 Year WA0201	1
435	0596017		Warranty, Frame, 50 Year, Custom Chassis, WA0013	1
436	0595698		Warranty, Axle, 3 Year, TAK-4, WA0050	1
437	0777368		Warranty, Axle, 2 Year, Meritor, General Service, WA0328	1
438	0652758		Warranty, ABS Brake System, 3 Year, Meritor Wabco, WA0232	1
439	0019914		Warranty, Structure, 10 Year, Custom Cab, WA0012	1
440	0595813		Warranty, Paint, 10 Year, Cab, Pro-Rate, WA0055	1
441	0524627		Warranty, Electronics, 5 Year, MUX, WA0014	1
442	0695416		Warranty, Pierce Camera System, WA0188	1
443	0647720		Warranty, Pierce LED Strip Lights, WA0203	1
444	0046369		Warranty, 5-year EVS Transmission, Standard Custom, WA0187	1
445	0685945		Warranty, Transmission Cooler, WA0216	1
446	0688798		Warranty, Water Tank, Lifetime, UPF, Poly Tank, WA0195	1
447	0596025		Warranty, Structure, 10 Year, Body, WA0009	1
448	0681118		Warranty, ROM, Roll-up Door, 7 Year, WA0206	1
449	0734463		Warranty, Pump, Waterous, 7 Year Parts, WA0382	1
450	0648675		Warranty, 10 Year S/S Pumbing, WA0035	1
451	0641372		Warranty, Foam System, Not Available	1
452	0006999		Warranty, Structure, 20 Year, Aerial Device, WA0052	1
453	0687388		Warranty, Swivels, 5 Year, Aerial Device, WA0197	1
454	0685727		Warranty, Hydraulic System and Components, 3 Year/5 Year, WA0200	1
455	0687327		Warranty, Waterway, 10 Year, Aerial Device, WA0198	1
456	0595860		Warranty, Paint, 4 Year, Aerial Device, Pro-Rated, WA0047	1
457	0595820		Warranty, Paint, 10 Year, Body, Pro-Rate, WA0057	1
458	0595421		Warranty, Goldstar, 3 Year, Apparatus, WA0018	1
459	0683627		Certification, Vehicle Stability, CD0156	1
460	0777618		Certification, Engine Installation, Saber FR/Enf, Cummins L9, 2017,CD0155/CD0158	1
461	0686786		Certification, Power Steering, CD0098	1
462	0631980		Certification, Cab Integrity, Saber FR/Enforcer, CD0130	1
463	0631973		Certification, Cab Door Durability, Saber FR/Enforcer, CD0137	1
464	0631978		Certification, Windshield Wiper Durability, Saber FR/Enforcer, CD0132	1

Line	Option	Type	Option Description	Qty
465	0631974		Certification, Electric Window Durability, Saber FR/Enforcer, CD0133	1
466	0631977		Certification, Seat Belt Anchors and Mounting, Saber FR/Enforcer, CD0134	1
467	0735949		Certification, Cab HVAC System Performance, SFR/Enf, CD0165/CD0167/CD0174/CD0175	1
468	0545073		Amp Draw Report, NFPA Current Edition	1
469	0002758		Amp Draw, NFPA/ULC Radio Allowance	1
470	0799247		Appleton/Florida Stock Unit	1
471	0000049		Ascendant BODY	1
472	0000012		PIERCE CHASSIS	1
473	0004713		ENGINE, OTHER	1
474	0046395		EVS 3000 Series TRANSMISSION	1
475	0020011		WATEROUS PUMP	1
476	0020009		POLY TANK	1
477	0028048		FOAM SYSTEM	1
478	0020006		SIDE CONTROL	1
479	0020007		AKRON VALVES	1
480	0020015		ABS SYSTEM	1
481	0658751		PUMPER BASE	1

Fire and Rescue Apparatus

One (1) Year Material and Workmanship
Basic Apparatus
Limited Warranty

1. LIMITED WARRANTY

Subject to the limitations and exclusions set forth below, Pierce Manufacturing provides the following warranty to the Buyer:

Coverage:	**Portions of the apparatus manufactured by Pierce shall be free from defects in material and workmanship**
Warranty Begins:	**The date the apparatus is placed in service, or 60 days from the original buyer invoice date, whichever comes first.**
Warranty Period Ends After:	**Twelve (12) months.**
Conditions and Exclusions: **See Also Paragraphs 2 thru 4**	**No specific exclusions apply**

This limited warranty shall apply only if the product is properly maintained in accordance with Pierce's maintenance instructions and manuals and is used in service which is normal to the particular model. Normal service means service which does not subject the product to stresses or impacts greater than normally result from careful use. If the Buyer discovers a defect or nonconformity, it must notify Pierce in writing within thirty (30) days after the date of discovery, but in any event prior to the expiration of the warranty period. THIS LIMITED WARRANTY MAY NOT BE ASSIGNED OR OTHERWISE TRANSFERRED BY THE BUYER TO ANY SUBSEQUENT USER OR PURCHASER OR TO ANY OTHER PERSON OR ENTITY.

Notwithstanding anything to the contrary herein, Pierce makes no warranty whatsoever as to:

(a) any integral parts, components, attachments or trade accessories of or to the product that are not manufactured by Pierce, including but not limited to engines, transmissions, drivelines, axles, water pumps and generators; with respect to all such parts, components, attachments and accessories, Pierce shall assign to Buyer the applicable warranties, if any, made by the respective manufacturers thereof;

(b) any vehicle, chassis, or component, part, attachment or accessory damaged by misuse, neglect, fire, exposure to severe environmental or chemical conditions, acidic environment, improper maintenance, accident, crash, or force majeure such as natural disaster, lightning, earthquake, windstorm, hail, flood, war or riot;

(c) any vehicle, chassis or component, part, attachment or accessory that has been repaired, altered or assembled in any way by any person or entity other than Pierce which, in the sole judgment of Pierce, adversely affects the performance, stability or purpose for which it was manufactured; or

(d) products or parts which may in the ordinary course wear out and have to be replaced during the warranty period, including, but not limited to, tires, fluids, gaskets and light bulbs. Pierce assumes no responsibility for the assembly of its parts or subassemblies into finishing products or vehicles unless the assembly is performed by Pierce.

The original purchaser may void this warranty in part or in its entirety if the product is repaired or replaced (a) without prior written approval of the Pierce Customer Service Department; or (b) at a facility which has not been approved by Pierce as to technical capability. Any repairs, modifications, alterations or aftermarket parts added after manufacture without the authorization of Pierce may void this warranty.

2. DISCLAIMERS OF WARRANTIES

THE WARRANTY SET FORTH IN PARAGRAPH 1 IS THE SOLE AND EXCLUSIVE WARRANTY GIVEN BY PIERCE. PIERCE HEREBY DISCLAIMS AND EXCLUDES ALL OTHER WARRANTIES, WHETHER EXPRESS, IMPLIED OR STATUTORY, INCLUDING WITHOUT LIMITATION ANY WARRANTY OF MERCHANTABILITY, ANY WARRANTY OF FITNESS FOR A PARTICULAR PURPOSE, AND ANY WARRANTIES ARISING FROM COURSE OF DEALING OR USAGE OF TRADE.

3. BUYER'S EXCLUSIVE REMEDY.

If the product fails to conform to the warranty set forth in paragraph 1 during the warranty period, and such nonconformity is not due to misuse, neglect, accident or improper maintenance, Buyer must notify Pierce within the time period specified in paragraph 1, and shall make the product available for inspection by Pierce or its designated agent. At the request of Pierce, any allegedly defective product shall be returned to Pierce by Buyer for examination and/or repair. Buyer shall be responsible for the cost of such transportation, and for risk of loss of or damage to the product during transportation. Within a reasonable time, Pierce shall repair or replace (at Pierce's option and expense) any nonconforming or defective parts. Repair or replacement shall be made only by a facility approved in advance in writing by Pierce. THIS REMEDY SHALL BE THE EXCLUSIVE AND SOLE REMEDY FOR ANY BREACH OF WARRANTY.

4. EXCLUSION OF CONSEQUENTIAL AND INCIDENTAL DAMAGES.

Notwithstanding anything to the contrary herein or in any agreement between Pierce and Buyer, IN NO EVENT SHALL PIERCE BE LIABLE FOR ANY CONSEQUENTIAL, INCIDENTAL, SPECIAL, INDIRECT, OR PUNITIVE DAMAGES WHATSOEVER, WHETHER ARISING OUT OF BREACH OF CONTRACT, WARRANTY, TORT (INCLUDING NEGLIGENCE AND STRICT LIABILITY) OR OTHER THEORY OF LAW OR EQUITY, WITH RESPECT TO VEHICLES OR OTHER PRODUCTS SOLD BY PIERCE, OR THEIR OPERATION OR FAILURE TO OPERATE, OR ANY DEFECTS THEREIN, OR ANY UNDERTAKINGS, ACTS OR OMISSIONS RELATED THERETO, REGARDLESS OF WHETHER PIERCE HAS BEEN INFORMED OF THE POSSIBILITY OF ANY SUCH DAMAGES. Without limiting the generality of the foregoing, Pierce specifically disclaims any liability for property or personal injury damages, penalties, damages for lost profits or revenues, loss of vehicles or products or any associated equipment, cost of substitute vehicles or products, down-time, delay damages, any other types of economic loss, or for any claims by any third party for any such damages.

Note: Any Surety Bond, if a part of the sale of the vehicle as to which this limited warranty is provided, applies only to this Pierce Basic One Year Limited Warranty for such vehicle, and not to other warranties made by Pierce in a separate document (if any) or to the warranties (if any) made by any manufacturer (other than Pierce) of any part, component, attachment or accessory that is incorporated into or attached to the vehicle.

Cummins Warranty

Worldwide
Fire Apparatus/Crash Trucks

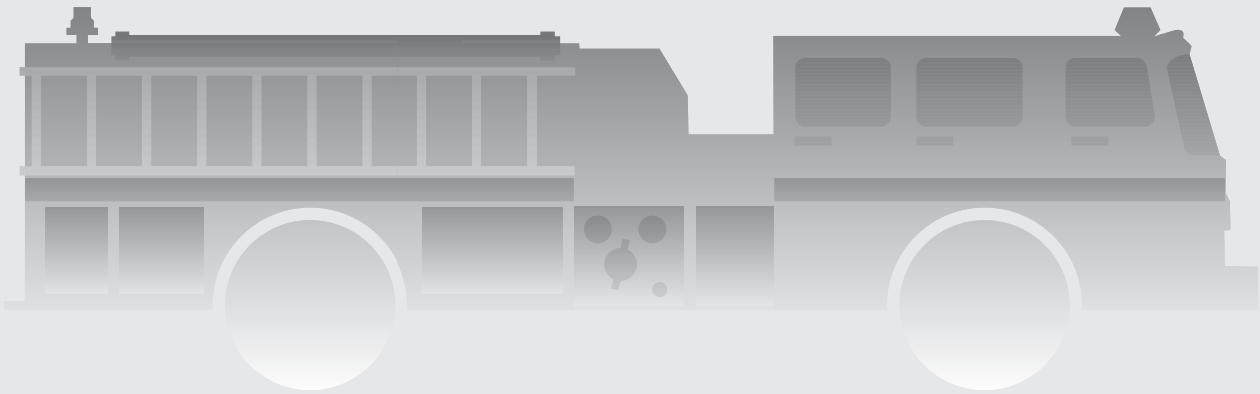

Coverage

Products Warranted

This Warranty applies to new diesel Engines sold by Cummins and delivered to the first user on or after April 1, 2007, that are used in fire apparatus truck and crash truck* applications Worldwide.

Base Engine Warranty

The Base Engine Warranty covers any failures of the Engine which result, under normal use and service, from a defect in material or factory workmanship (Warrantable Failure). This Coverage begins with the sale of the Engine by Cummins and ends five years or 100,000 miles (160,935 kilometers), whichever occurs first, after the date of delivery of the Engine to the first user.

Engine aftertreatment components included in the Cummins Critical Parts List (CPL) and marked with a Cummins part number are covered under Base Engine Warranty.

Additional Coverage is outlined in the Emission Warranty section.

These Warranties are made to all Owners in the chain of distribution and Coverage continues to all subsequent Owners until the end of the periods of Coverage.

Cummins Responsibilities

Cummins will pay for all parts and labor needed to repair the damage to the Engine resulting from a Warrantable Failure.

Cummins will pay for the lubricating oil, antifreeze, filter elements, belts, hoses and other maintenance items that are not reusable due to the Warrantable Failure.

Cummins will pay for reasonable labor costs for Engine removal and reinstallation when necessary to repair a Warrantable Failure.

Cummins will pay reasonable costs for towing a vehicle disabled by a Warrantable Failure to the nearest authorized repair location. In lieu of the towing expense, Cummins will pay reasonable costs for mechanics to travel to and from the location of the vehicle, including meals, mileage and lodging when the repair is performed at the site of the failure.

Owner Responsibilities

Owner is responsible for the operation and maintenance of the Engine as specified in Cummins Operation and Maintenance Manuals. Owner is also responsible for providing proof that all recommended maintenance has been performed.

Before the expiration of the applicable Warranty, Owner must notify a Cummins distributor, authorized dealer or other repair location approved by Cummins of any Warrantable Failure and make the Engine available for repair by such facility. Except for Engines disabled by a Warrantable Failure, Owner must also deliver the Engine to the repair facility.

Service locations are listed on the Cummins Worldwide Service Locator at cummins.com.

Owner is responsible for the cost of lubricating oil, antifreeze, filter elements and other maintenance items provided during Warranty repairs unless such items are not reusable due to the Warrantable Failure.

Owner is responsible for communication expenses, meals, lodging and similar costs incurred as a result of a Warrantable Failure.

Owner is responsible for non-Engine repairs and for ‘‘downtime’’ expenses, cargo damage, fines, all applicable taxes, all business costs and other losses resulting from a Warrantable Failure.

Owner is responsible for a $100 (U.S. Dollars) deductible per each service visit under this plan in the 3rd, 4th and 5th years of Base Engine Warranty. The deductible will not be charged during the first 2 years of the Base Engine Warranty.

Limitations

Cummins is not responsible for failures or damage resulting from what Cummins determines to be abuse or neglect, including, but not limited to: operation without adequate coolants or lubricants; overfueling; overspeeding; lack of maintenance of lubricating, cooling or intake systems; improper storage, starting, warm-up, run-in or shutdown practices; unauthorized modifications of the Engine.

Any unauthorized modifications to the aftertreatment could negatively effect emissions certification and void Warranty.

Cummins is also not responsible for failures caused by incorrect oil, fuel or diesel exhaust fluid or by water, dirt or other contaminants in the fuel, oil or diesel

exhaust fluid.

This Warranty does not apply to accessories supplied by Cummins which bear the name of another company. Such non-warranted accessories include, but are not limited to: alternators, starters, fans, air conditioning compressors, clutches, filters, transmissions, torque converters, vacuum pumps, power steering pumps, fan drives and air compressors. Cummins branded alternators and starters are covered for the first two years from the date of delivery of the Engine to the first user, or the expiration of the Base Engine Warranty, whichever occurs first.

Failures resulting in excessive oil consumption are not covered beyond the duration of the Coverage or 100,000 miles (160,935 kilometers) or 7,000 hours from the date of delivery of the Engine to the first user, whichever of the three occurs first. Before a claim for excessive oil consumption will be considered, Owner must submit adequate documentation to show that consumption exceeds Cummins published standards.

Failures of belts and hoses supplied by Cummins are not covered beyond the first year from the date of delivery of the Engine to the first user or the duration of the Warranty, whichever occurs first.

Parts used to repair a Warrantable Failure may be new Cummins parts, Cummins approved rebuilt parts or repaired parts. Cummins is not responsible for failures resulting from the use of parts not approved by Cummins.

A new Cummins or Cummins approved rebuilt part used to repair a Warrantable Failure assumes the identity of the part it replaced and is entitled to the remaining Coverage hereunder.

Cummins Inc. reserves the right to interrogate Electronic Control Module (ECM) data for purposes of failure analysis.

CUMMINS DOES NOT COVER WEAR OR WEAROUT OF COVERED PARTS.

CUMMINS IS NOT RESPONSIBLE FOR INCIDENTAL OR CONSEQUENTIAL DAMAGES.

THIS WARRANTY AND THE EMISSION WARRANTY SET FORTH HEREINAFTER ARE THE SOLE WARRANTIES MADE BY CUMMINS IN REGARD TO THESE ENGINES. CUMMINS MAKES NO OTHER WARRANTIES, EXPRESS OR IMPLIED, OR OF MERCHANTABILITY OR FITNESS FOR A PARTICULAR PURPOSE.

This Warranty gives you specific legal rights, and you may also have other rights which vary from state to state.

Emission Warranty

Products Warranted

This Emission Warranty applies to new Engines marketed by Cummins that are used in the United States** in vehicles designed for transporting persons or property on a street or highway. This Warranty applies to Engines delivered to the first user on or after September 1, 1992.

Coverage

Cummins warrants to the first user and each subsequent purchaser that the Engine is designed, built and equipped so as to conform at the time of sale by Cummins with all U.S. federal emission regulations applicable at the time of manufacture and that it is free from defects in material or factory workmanship which would cause it not to meet these regulations within the longer of the following periods: (A) Five years or 100,000 miles (160,935 kilometers) of operation, whichever occurs first, as measured from the date of delivery of the Engine to the first user or (B) The Base Engine Warranty.

If the vehicle in which the Engine is installed is registered in the state of California, a separate California Emission Warranty also applies.

Limitations

Failures, other than those resulting from defects in material or factory workmanship, are not covered by this Warranty.

Cummins is not responsible for failures or damage resulting from what Cummins determines to be abuse or neglect, including, but not limited to: operation without adequate coolants or lubricants; overfueling; overspeeding; lack of maintenance of lubricating, cooling or intake systems; improper storage, starting, warm-up, run-in or shutdown practices; unauthorized modifications of the Engine.

Any unauthorized modifications to the aftertreatment could negatively effect emissions certification and void Warranty.

Cummins is also not responsible for failures caused by incorrect oil, fuel or diesel exhaust fluid or by water, dirt or other contaminants in the fuel, oil or diesel exhaust fluid.

Cummins is not responsible for non-Engine repairs, ‘‘downtime’’ expenses, cargo damage, fines, all applicable taxes, all business costs or other losses resulting from a Warrantable Failure.

CUMMINS IS NOT RESPONSIBLE FOR INCIDENTAL OR CONSEQUENTIAL DAMAGES.

* Airport operated crash trucks and fire department operated trucks employed to respond to fires, hazardous material releases, rescue and other emergency-type situations.

** United States includes American Samoa, the Commonwealth of Northern Mariana Islands, Guam, Puerto Rico and the U.S. Virgin Islands.

Cummins Inc.
Box 3005
Columbus, IN 47202-3005
U.S.A.

Bulletin 3381161
Printed in U.S.A. Rev. 08/09
©2001 Cummins Inc.

R. H. SHEPPARD CO., INC.
101 Philadelphia St.
Hanover, PA 17331
Pierce Manufacturing Inc.
2600 American Drive
Appleton, WI 54912

LIMITED WARRANTY: The R. H. Sheppard Co. Inc., ("Sheppard") warrants all M110PKG1 and M110SAU1 steering gears manufactured and sold to Pierce Manufacturing Inc. ("Pierce") for application on Pierce TAK-4 equipped vehicles to be free from defects of workmanship and material under normal use and service for a period of thirty six months from the in service date of the vehicle to its original owner.

Vehicle applications where Sheppard product is used require an application approval before production build. If Pierce uses Sheppard product for any purpose or application which has not been approved by Sheppard in advance, including aftermarket devices (defined as a device added to the steering system directly or indirectly affecting the performance or operation of the Sheppard product in its approved application) not tested and approved by Sheppard this limited warranty SHALL NOT APPLY AND SHALL BE VOID. SHEPPARD MAKES NO OTHER WARRANTY, EITHER EXPRESS OR IMPLIED. SHEPPARD EXPRESSLY DISCLAIMS ANY WARRANTY OF MERCHANTABILITY OR FITNESS FOR ANY PARTICULAR USE OR PURPOSE WHICH EXTEND BEYOND THE DESCRIPTION ON THE FACE HEREOF.
SHEPPARD SHALL NOT BE LIABLE FOR ANY CONSEQUENTIAL, SPECIAL OR INDIRECT DAMAGES OR FOR LOSS OR DAMAGE DIRECTLY OR INDIRECTLY ARISING FROM THE USE OF A PRODUCT. Pierce expressly acknowledges its obligation to inform all users (customers) of the above disclaimer.

CONDITIONS: Claims under this Limited Warranty may only be made by Pierce. In no event shall Sheppard be held liable for warranty charges by unauthorized persons. No allowance will be made for repairs or alterations, unless made with the written consent of Sheppard. Authorized Pierce dealers shall be the only authorized repair facility for Sheppard products applied to Pierce vehicles. Any warrantable repair made under this Limited Warranty must be made on or before 36 months of the in-service date for the Product to which the claim relates. Sheppard shall not be liable for claims made after such date. Sheppard product fitted to Pierce vehicles that are repaired at a repair facility other than an authorized Pierce dealer within the warranty period will be considered for payment under the guidelines of this agreement only by joint written consideration of Sheppard and Pierce warranty departments. It shall be the responsibility of the Pierce warranty department to notify Sheppard if and when this situation occurs. Sheppard will not be held responsible for damage to other steering components such as but not limited to pumps and reservoirs due to improper adjustment of steering gear relief plungers. Vehicle downtime and towing will not be considered under warranty.

REMEDIES: The sole and exclusive remedy of Pierce for Sheppard's breach of the foregoing warranty is limited to the return and repair or reimbursement as follows:

Warranty Support: In support of the Pierce dealer network, Sheppard will provide a toll-free "Hotline" service to assist in the diagnosis and troubleshooting of steering problems. The R. H. Sheppard Co., Inc. Field Service Department can be reached at 1-800-274-7437 for assistance. Sheppard will require that Pierce dealers contact this toll-free "Hotline" for approval before product is removed from a vehicle in a warranty situation. When contacted regarding a warranty situation, the Sheppard representative will provide an authorization number for removal of the product. This Returned Goods Authorization (RGA) number must be included in all warranty correspondence and attached to all returned goods.

Procedure: In the event of a warranty situation, the servicing dealer shall contact the Sheppard Hotline and receive an RGA number before replacing any steering gear. For M110PKG1 and M110SAU1 steering gear models, the dealer will first obtain an RGA number from Sheppard, and then order the replacement gear from Pierce. Replacement M110PKG1 and M110SAU1 steering gears shall be shipped from Pierce once those models are in full production. A warranty claim for both parts and labor will then be generated by the dealer and sent to Pierce. After reviewing the claim, Pierce will submit it to Sheppard for reimbursement.

Parts Reimbursement: Sheppard agrees to reimburse Pierce at Pierce's purchase price plus 30% mark-up for parts found to be defective within the warranty period. Parts being returned for warranty consideration shall be sent to the R. H. Sheppard Company, 447 E. Middle St., Hanover, PA 17331 ATTN: Warranty Dept. Sheppard's determination as to whether the part is covered by the foregoing warranty is final and conclusive. Sheppard requires the return of complete steering gears only. Individual seals replaced under warranty **should not** be returned unless specifically requested by Sheppard. All parts being returned for warranty consideration must be clearly tagged with all pertinent warranty information including, but not limited to (1) Returned Goods Authorization number (RGA); (2) claim number; (3) date in service; (4) date of failure; (5) mileage; (6) part number; (7) labor hours; (8) dealer labor rate and; (9) dollar amount claimed. Claims submitted without prior authorization are subject to rejection under this agreement.

Labor: Labor to repair Sheppard product found to be defective within the warranty period will be reimbursed at not more than 10 hours per vehicle. Labor shall be reimbursed at the rate of $85.00 USD per hour for M110PGK1 and M110SAU1 steering gears.

Freight: Pierce will collect M110PGK1 and M110SAU1 warranty material at a designated collection point. Inbound freight to the Pierce collection point will be the responsibility of Pierce. All warranty material should be returned from the Pierce collection point to R. H. Sheppard Co. Freight Collect by a Sheppard-specified common carrier based on location of the Pierce collection point. Sheppard does not require the return of failed seals. Any freight charges incurred for the return of seals will be the responsibility of Pierce. Parts returned for warranty consideration without prior authorization are subject to rejection under this agreement and may be subject to a charge back of inbound freight charges. Parts rejected under this warranty will be returned to Pierce Freight Collect or scrapped by Sheppard at Pierce's discretion.

Outside Purchases: Pierce authorized dealers shall be the only outlet for repair, warranty service and parts for Sheppard products applied to Pierce vehicles. Sheppard will not be responsible for consumables such as hoses, belts, fluids, fittings or miscellaneous shop material that may be required for the repair of the product.

Warranty Documentation: Warranty credit memos will be issued monthly to the Pierce Warranty Department. Monthly credit memos will include (1) claim number; (2) part number; (3) parts reimbursement; (4) labor reimbursement; (5) any applicable Pierce reference number and; (6) reason for rejection or acceptance of the claim. Credit memos will be issued in U.S. funds. Debits for warranty claims will not be accepted under this agreement. Claim disposition will constitute the final and conclusive resolution of warranty claims.

Parts Retention: Sheppard will retain parts submitted for warranty consideration for a period of sixty (60) days for any material found to be rejected for warranty. Sheppard will notify Pierce within sixty (60) days of receipt of Sheppard's determination as to whether any such part is covered by this warranty. Warranty reimbursement will be issued within thirty days of receipt of material at Sheppard.

Good-Will Requests: Good-Will requests will be considered jointly between Sheppard and Pierce for equitable compensation.

RECALLS: Sheppard retains the right to review information regarding federal motor vehicle recall and /or product repair programs if Sheppard products fitted to Pierce vehicles are alleged to be non-compliant with federal motor vehicle safety standards. Sheppard retains the right to review any claims of product defect or non-compliance before participating in reimbursement of expenses incurred as a result of alleged non-compliance or defect of its products. Sheppard agrees to negotiate in good faith for the reimbursement of expenses incurred by Pierce for all administrative, material and labor cost and expense associated with any recall where Sheppard product is found to be defective or non-compliant with federal motor vehicle standards.

MISCELLANEOUS: This writing constitutes the full complete and final statement of Sheppard's limited warranty for M110PKG1 and M110SAU1 products sold to Pierce. All prior oral or written correspondence, test data, negotiations, representations, understandings and the like regarding products are merged in this writing and extinguished by it. This limited warranty may not be altered, amended extended or modified except by a writing signed by the President or Vice President of Sheppard. No employee, vendor, dealer, distributor or other representative of Sheppard has authority to make statements to extend, expand, alter or amend the terms of this Limited Warranty. Sheppard expressly disclaims any statements contrary to the Limited Warranty. Sheppard's failure at any time to enforce any of the terms and conditions stated herein shall not constitute a waiver of any provisions herein. This Limited Warranty shall be governed by and construed in accordance with the laws of the Commonwealth of Pennsylvania.

Any legal actions which may arise as a result of disputes, controversies or claims arising out of or related to this limited warranty shall be in such forum as Sheppard and Pierce shall agree, or, in the absence of agreement, in a court of appropriate jurisdiction other than in the county in which either party is located. This Limited Warranty shall not be assigned by Pierce.

COOPERATIVE EFFORT: Sheppard and Pierce agree to work cooperatively toward expanding this warranty coverage to a period of sixty months from the in service date. These cooperative efforts shall focus on examining the effects of increased heat generated by 2007 model engines and its impact on the entire power steering system.

AGREEMENT: This agreement is effective April 3, 2006 and may be modified by mutual agreement between Sheppard and Pierce of a signed amendment to be attached to the original Limited Warranty. There are no third party beneficiaries to this Limited Warranty. This warranty agreement applies to Pierce authorized dealers only. It does not encompass any special arrangements that Pierce may now have or that Pierce may enter into, with any other segments of the trucking industry. This warranty agreement does not apply to non-conforming product removed at Pierce assembly plants.

This Limited Warranty agreement between the R. H. Sheppard Co., Inc and Pierce Manufacturing Inc. may be terminated by either party with thirty days written notice prior to termination.

Signed at Pierce Manufacturing Inc., Appleton, WI this _____ day of _____, 2006.

R. H. SHEPPARD CO., INC.

_____
Authorized Signature

_____
Title

PIERCE MANUFACTURING INC.

_____
Authorized Signature

_____
Title

Fire and Rescue Apparatus

Lifetime Fifty (50) Year Structural Integrity Custom Chassis Frame

Limited Warranty

1. LIMITED WARRANTY

Subject to the limitations and exclusions set forth below, Pierce Manufacturing provides the following warranty to the Buyer:

Coverage:	**Custom chassis frame rail manufactured by Pierce shall be free from defects in material and workmanship**
Warranty Begins:	**The date of the original purchase invoice (issued when the product ships from the factory).**
Warranty Period Ends After:	**Fifty (50) Years (Expected Life of Apparatus)**
Conditions and Exclusions: **See Also Paragraphs 2 thru 4**	**This warranty does not apply to damage caused by corrosion.**

This limited warranty shall apply only if the product is properly maintained in accordance with Pierce's maintenance instructions and manuals and is used in service which is normal to the particular model. Normal service means service which does not subject the product to stresses or impacts greater than normally result from careful use. If the Buyer discovers a defect or nonconformity, it must notify Pierce in writing within thirty (30) days after the date of discovery, but in any event prior to the expiration of the warranty period. THIS LIMITED WARRANTY MAY NOT BE ASSIGNED OR OTHERWISE TRANSFERRED BY THE BUYER TO ANY SUBSEQUENT USER OR PURCHASER OR TO ANY OTHER PERSON OR ENTITY.

Notwithstanding anything to the contrary herein, Pierce makes no warranty whatsoever as to:

(a) any integral parts, components, attachments or trade accessories of or to the product that are not manufactured by Pierce, including but not limited to engines, transmissions, drivelines, axles, water pumps and generators; with respect to all such parts, components, attachments and accessories, Pierce shall assign to Buyer the applicable warranties, if any, made by the respective manufacturers thereof;

(b) any vehicle, chassis, or component, part, attachment or accessory damaged by misuse, neglect, fire, exposure to severe environmental or chemical conditions, acidic environment, improper maintenance, accident, crash, or force majeure such as natural disaster, lightning, earthquake, windstorm, hail, flood, war or riot;

(c) any vehicle, chassis or component, part, attachment or accessory that has been repaired, altered or assembled in any way by any person or entity other than Pierce which, in the sole judgment of Pierce, adversely affects the performance, stability or purpose for which it was manufactured; or

(d) products or parts which may in the ordinary course wear out and have to be replaced during the warranty period, including, but not limited to, tires, fluids, gaskets and light bulbs. Pierce assumes no responsibility for the assembly of its parts or subassemblies into finishing products or vehicles unless the assembly is performed by Pierce.

The original purchaser may void this warranty in part or in its entirety if the product is repaired or replaced (a) without prior written approval of the Pierce Customer Service Department; or (b) at a facility which has not been approved by Pierce as to technical capability. Any repairs, modifications, alterations or aftermarket parts added after manufacture without the authorization of Pierce may void this warranty.

2. DISCLAIMERS OF WARRANTIES

THE WARRANTY SET FORTH IN PARAGRAPH 1 IS THE SOLE AND EXCLUSIVE WARRANTY GIVEN BY PIERCE. PIERCE HEREBY DISCLAIMS AND EXCLUDES ALL OTHER WARRANTIES, WHETHER EXPRESS, IMPLIED OR STATUTORY, INCLUDING WITHOUT LIMITATION ANY WARRANTY OF MERCHANTABILITY, ANY WARRANTY OF FITNESS FOR A PARTICULAR PURPOSE, AND ANY WARRANTIES ARISING FROM COURSE OF DEALING OR USAGE OF TRADE.

3. BUYER'S EXCLUSIVE REMEDY.

If the product fails to conform to the warranty set forth in paragraph 1 during the warranty period, and such nonconformity is not due to misuse, neglect, accident or improper maintenance, Buyer must notify Pierce within the time period specified in paragraph 1, and shall make the product available for inspection by Pierce or its designated agent. At the request of Pierce, any allegedly defective product shall be returned to Pierce by Buyer for examination and/or repair. Buyer shall be responsible for the cost of such transportation, and for risk of loss of or damage to the product during transportation. Within a reasonable time, Pierce shall repair or replace (at Pierce's option and expense) any nonconforming or defective parts. Repair or replacement shall be made only by a facility approved in advance in writing by Pierce. THIS REMEDY SHALL BE THE EXCLUSIVE AND SOLE REMEDY FOR ANY BREACH OF WARRANTY.

4. EXCLUSION OF CONSEQUENTIAL AND INCIDENTAL DAMAGES.

Notwithstanding anything to the contrary herein or in any agreement between Pierce and Buyer, IN NO EVENT SHALL PIERCE BE LIABLE FOR ANY CONSEQUENTIAL, INCIDENTAL, SPECIAL, INDIRECT, OR PUNITIVE DAMAGES WHATSOEVER, WHETHER ARISING OUT OF BREACH OF CONTRACT, WARRANTY, TORT (INCLUDING NEGLIGENCE AND STRICT LIABILITY) OR OTHER THEORY OF LAW OR EQUITY, WITH RESPECT TO VEHICLES OR OTHER PRODUCTS SOLD BY PIERCE, OR THEIR OPERATION OR FAILURE TO OPERATE, OR ANY DEFECTS THEREIN, OR ANY UNDERTAKINGS, ACTS OR OMISSIONS RELATED THERETO, REGARDLESS OF WHETHER PIERCE HAS BEEN INFORMED OF THE POSSIBILITY OF ANY SUCH DAMAGES. Without limiting the generality of the foregoing, Pierce specifically disclaims any liability for property or personal injury damages, penalties, damages for lost profits or revenues, loss of vehicles or products or any associated equipment, cost of substitute vehicles or products, down-time, delay damages, any other types of economic loss, or for any claims by any third party for any such damages.

Note: Any Surety Bond, if a part of the sale of the vehicle as to which this limited warranty is provided, applies only to this Pierce Basic One Year Limited Warranty for such vehicle, and not to other warranties made by Pierce in a separate document (if any) or to the warranties (if any) made by any manufacturer (other than Pierce) of any part, component, attachment or accessory that is incorporated into or attached to the vehicle.

Fire and Rescue Apparatus

Three (3) Year Material and Workmanship
TAK-4 Independent Front Suspension

Limited Warranty

1. LIMITED WARRANTY

Subject to the limitations and exclusions set forth below, Pierce Manufacturing provides the following warranty to the Buyer:

Coverage:	**The TAK-4 Front Independent Suspension and Steering Gears shall be free from defects in material and workmanship.**
Warranty Begins:	**The date of the original purchase invoice (issued when the product ships from the factory).**
Warranty Period Ends After:	**Three (3) Years -or- 30,000 Miles**
Conditions and Exclusions: **See Also Paragraphs 2 thru 4**	**This limited warranty excludes brake pads, brake rotors, seal boots and shock absorbers.**

This limited warranty shall apply only if the product is properly maintained in accordance with Pierce's maintenance instructions and manuals and is used in service which is normal to the particular model. Normal service means service which does not subject the product to stresses or impacts greater than normally result from careful use. If the Buyer discovers a defect or nonconformity, it must notify Pierce in writing within thirty (30) days after the date of discovery, but in any event prior to the expiration of the warranty period. THIS LIMITED WARRANTY MAY NOT BE ASSIGNED OR OTHERWISE TRANSFERRED BY THE BUYER TO ANY SUBSEQUENT USER OR PURCHASER OR TO ANY OTHER PERSON OR ENTITY.

Notwithstanding anything to the contrary herein, Pierce makes no warranty whatsoever as to:

(a) any integral parts, components, attachments or trade accessories of or to the product that are not manufactured by Pierce, including but not limited to engines, transmissions, drivelines, axles, water pumps and generators; with respect to all such parts, components, attachments and accessories, Pierce shall assign to Buyer the applicable warranties, if any, made by the respective manufacturers thereof;

(b) any vehicle, chassis, or component, part, attachment or accessory damaged by misuse, neglect, fire, exposure to severe environmental or chemical conditions, acidic environment, improper maintenance, accident, crash, or force majeure such as natural disaster, lightning, earthquake, windstorm, hail, flood, war or riot;

(c) any vehicle, chassis or component, part, attachment or accessory that has been repaired, altered or assembled in any way by any person or entity other than Pierce which, in the sole judgment of Pierce, adversely affects the performance, stability or purpose for which it was manufactured; or

(d) products or parts which may in the ordinary course wear out and have to be replaced during the warranty period, including, but not limited to, tires, fluids, gaskets and light bulbs. Pierce assumes no responsibility for the assembly of its parts or subassemblies into finishing products or vehicles unless the assembly is performed by Pierce.

The original purchaser may void this warranty in part or in its entirety if the product is repaired or replaced (a) without prior written approval of the Pierce Customer Service Department; or (b) at a facility which has not been approved by Pierce as to technical capability. Any repairs, modifications, alterations or aftermarket parts added after manufacture without the authorization of Pierce may void this warranty.

2. DISCLAIMERS OF WARRANTIES

THE WARRANTY SET FORTH IN PARAGRAPH 1 IS THE SOLE AND EXCLUSIVE WARRANTY GIVEN BY PIERCE. PIERCE HEREBY DISCLAIMS AND EXCLUDES ALL OTHER WARRANTIES, WHETHER EXPRESS, IMPLIED OR STATUTORY, INCLUDING WITHOUT LIMITATION ANY WARRANTY OF MERCHANTABILITY, ANY WARRANTY OF FITNESS FOR A PARTICULAR PURPOSE, AND ANY WARRANTIES ARISING FROM COURSE OF DEALING OR USAGE OF TRADE.

3. BUYER'S EXCLUSIVE REMEDY.

If the product fails to conform to the warranty set forth in paragraph 1 during the warranty period, and such nonconformity is not due to misuse, neglect, accident or improper maintenance, Buyer must notify Pierce within the time period specified in paragraph 1, and shall make the product available for inspection by Pierce or its designated agent. At the request of Pierce, any allegedly defective product shall be returned to Pierce by Buyer for examination and/or repair. Buyer shall be responsible for the cost of such transportation, and for risk of loss of or damage to the product during transportation. Within a reasonable time, Pierce shall repair or replace (at Pierce's option and expense) any nonconforming or defective parts. Repair or replacement shall be made only by a facility approved in advance in writing by Pierce. THIS REMEDY SHALL BE THE EXCLUSIVE AND SOLE REMEDY FOR ANY BREACH OF WARRANTY.

4. EXCLUSION OF CONSEQUENTIAL AND INCIDENTAL DAMAGES.

Notwithstanding anything to the contrary herein or in any agreement between Pierce and Buyer, IN NO EVENT SHALL PIERCE BE LIABLE FOR ANY CONSEQUENTIAL, INCIDENTAL, SPECIAL, INDIRECT, OR PUNITIVE DAMAGES WHATSOEVER, WHETHER ARISING OUT OF BREACH OF CONTRACT, WARRANTY, TORT (INCLUDING NEGLIGENCE AND STRICT LIABILITY) OR OTHER THEORY OF LAW OR EQUITY, WITH RESPECT TO VEHICLES OR OTHER PRODUCTS SOLD BY PIERCE, OR THEIR OPERATION OR FAILURE TO OPERATE, OR ANY DEFECTS THEREIN, OR ANY UNDERTAKINGS, ACTS OR OMISSIONS RELATED THERETO, REGARDLESS OF WHETHER PIERCE HAS BEEN INFORMED OF THE POSSIBILITY OF ANY SUCH DAMAGES. Without limiting the generality of the foregoing, Pierce specifically disclaims any liability for property or personal injury damages, penalties, damages for lost profits or revenues, loss of vehicles or products or any associated equipment, cost of substitute vehicles or products, down-time, delay damages, any other types of economic loss, or for any claims by any third party for any such damages.

Note: Any Surety Bond, if a part of the sale of the vehicle as to which this limited warranty is provided, applies only to this Pierce Basic One Year Limited Warranty for such vehicle, and not to other warranties made by Pierce in a separate document (if any) or to the warranties (if any) made by any manufacturer (other than Pierce) of any part, component, attachment or accessory that is incorporated into or attached to the vehicle.

Fire and Rescue Apparatus

Two (2) Year Material and Workmanship
Meritor Axles
Limited Warranty

1. LIMITED WARRANTY

Subject to the limitations and exclusions set forth below, Pierce Manufacturing provides the following warranty to the Buyer:

Coverage:	**The Meritor axle shall be covered by Meritor as indicated in the attached Meritor warranty coverage description**
Warranty Begins:	**The date of the original purchase invoice (issued when the product ships from the factory).**
Warranty Period Ends After:	**Two (2) Year**
Conditions and Exclusions: **See Also Paragraphs 2 thru 4**	**The exclusions listed in the attached Meritor warranty description shall apply.**

This limited warranty shall apply only if the product is properly maintained in accordance with Pierce's maintenance instructions and manuals and is used in service which is normal to the particular model. Normal service means service which does not subject the product to stresses or impacts greater than normally result from careful use. If the Buyer discovers a defect or nonconformity, it must notify Pierce in writing within thirty (30) days after the date of discovery, but in any event prior to the expiration of the warranty period. THIS LIMITED WARRANTY MAY NOT BE ASSIGNED OR OTHERWISE TRANSFERRED BY THE BUYER TO ANY SUBSEQUENT USER OR PURCHASER OR TO ANY OTHER PERSON OR ENTITY.

Notwithstanding anything to the contrary herein, Pierce makes no warranty whatsoever as to:

(a) any integral parts, components, attachments or trade accessories of or to the product that are not manufactured by Pierce, including but not limited to engines, transmissions, drivelines, axles, water pumps and generators; with respect to all such parts, components, attachments and accessories, Pierce shall assign to Buyer the applicable warranties, if any, made by the respective manufacturers thereof;

(b) any vehicle, chassis, or component, part, attachment or accessory damaged by misuse, neglect, fire, exposure to severe environmental or chemical conditions, acidic environment, improper maintenance, accident, crash, or force majeure such as natural disaster, lightning, earthquake, windstorm, hail, flood, war or riot;

(c) any vehicle, chassis or component, part, attachment or accessory that has been repaired, altered or assembled in any way by any person or entity other than Pierce which, in the sole judgment of Pierce, adversely affects the performance, stability or purpose for which it was manufactured; or

(d) products or parts which may in the ordinary course wear out and have to be replaced during the warranty period, including, but not limited to, tires, fluids, gaskets and light bulbs. Pierce assumes no responsibility for the assembly of its parts or subassemblies into finishing products or vehicles unless the assembly is performed by Pierce.

The original purchaser may void this warranty in part or in its entirety if the product is repaired or replaced (a) without prior written approval of the Pierce Customer Service Department; or (b) at a facility which has not been approved by Pierce as to technical capability. Any repairs, modifications, alterations or aftermarket parts added after manufacture without the authorization of Pierce may void this warranty.

2. DISCLAIMERS OF WARRANTIES

THE WARRANTY SET FORTH IN PARAGRAPH 1 IS THE SOLE AND EXCLUSIVE WARRANTY GIVEN BY PIERCE. PIERCE HEREBY DISCLAIMS AND EXCLUDES ALL OTHER WARRANTIES, WHETHER EXPRESS, IMPLIED OR STATUTORY, INCLUDING WITHOUT LIMITATION ANY WARRANTY OF MERCHANTABILITY, ANY WARRANTY OF FITNESS FOR A PARTICULAR PURPOSE, AND ANY WARRANTIES ARISING FROM COURSE OF DEALING OR USAGE OF TRADE.

3. BUYER'S EXCLUSIVE REMEDY.

If the product fails to conform to the warranty set forth in paragraph 1 during the warranty period, and such nonconformity is not due to misuse, neglect, accident or improper maintenance, Buyer must notify Pierce within the time period specified in paragraph 1, and shall make the product available for inspection by Pierce or its designated agent. At the request of Pierce, any allegedly defective product shall be returned to Pierce by Buyer for examination and/or repair. Buyer shall be responsible for the cost of such transportation, and for risk of loss of or damage to the product during transportation. Within a reasonable time, Pierce shall repair or replace (at Pierce's option and expense) any nonconforming or defective parts. Repair or replacement shall be made only by a facility approved in advance in writing by Pierce. THIS REMEDY SHALL BE THE EXCLUSIVE AND SOLE REMEDY FOR ANY BREACH OF WARRANTY.

4. EXCLUSION OF CONSEQUENTIAL AND INCIDENTAL DAMAGES.

Notwithstanding anything to the contrary herein or in any agreement between Pierce and Buyer, IN NO EVENT SHALL PIERCE BE LIABLE FOR ANY CONSEQUENTIAL, INCIDENTAL, SPECIAL, INDIRECT, OR PUNITIVE DAMAGES WHATSOEVER, WHETHER ARISING OUT OF BREACH OF CONTRACT, WARRANTY, TORT (INCLUDING NEGLIGENCE AND STRICT LIABILITY) OR OTHER THEORY OF LAW OR EQUITY, WITH RESPECT TO VEHICLES OR OTHER PRODUCTS SOLD BY PIERCE, OR THEIR OPERATION OR FAILURE TO OPERATE, OR ANY DEFECTS THEREIN, OR ANY UNDERTAKINGS, ACTS OR OMISSIONS RELATED THERETO, REGARDLESS OF WHETHER PIERCE HAS BEEN INFORMED OF THE POSSIBILITY OF ANY SUCH DAMAGES. Without limiting the generality of the foregoing, Pierce specifically disclaims any liability for property or personal injury damages, penalties, damages for lost profits or revenues, loss of vehicles or products or any associated equipment, cost of substitute vehicles or products, down-time, delay damages, any other types of economic loss, or for any claims by any third party for any such damages.

Note: Any Surety Bond, if a part of the sale of the vehicle as to which this limited warranty is provided, applies only to this Pierce Basic One Year Limited Warranty for such vehicle, and not to other warranties made by Pierce in a separate document (if any) or to the warranties (if any) made by any manufacturer (other than Pierce) of any part, component, attachment or accessory that is incorporated into or attached to the vehicle.

MERITOR® COMMERCIAL VEHICLE SYSTEMS

WARRANTY/MODEL YEAR 2018 VEHICLES

MERITOR®



WARRANTY INFORMATION CONTENTS

Effective Model Year 2018 Vehicles

Linehaul 3-4
General Service 5-6
Heavy Service 7-8
Off-Highway Service 9
Terms and Conditions 10

How to Read Warranty Coverage

Number of Years	Mileage (in thousands) Unl=Unlimited	P=Parts Only P&L=Parts & Labor

Notice:

Models or components that are approved for use by Meritor's vocational guidelines contained in Meritor Publication TP-9441 for axles, SP-8320 for trailer axles, TP-12126 for drivelines, which are not specifically listed, are warranted for one year, unlimited miles, parts only (1/Unl/P).

Products purchased on an incomplete vehicle (glider) are limited to one year, unlimited miles parts only (1/Unl/P).

Advantage Program

Purchasing additional coverage on select components will continue to safeguard your investment against major repair costs after the initial base coverage expires. You can find out more about the Advantage Program by visiting www.meritor.com or by contacting Meritor at 866-OnTrac1 (866-668-7221).

LINEHAUL WARRANTY INFORMATION

Linehaul Vehicles

- Auto Hauler
- Bulk Hauler
- Chip Hauler (Truck)*
- Doubles
- Flatbed
- General Freight
- Grain Hauler
- Livestock Hauler
- Moving Van
- Pipe Hauler
- Refrigerated Freight
- Tanker
- Triples

* Chip Hauler vehicles require specific axle models listed below and Linehaul condition to be eligible for Linehaul warranty consideration.

Linehaul Typically Is

- High mileage operation (over 60,000 miles/year)
- Well maintained major highways of concrete or asphalt construction
- Greater than 30 miles between starting and stopping

Coverage under Meritor's warranty require that the application of products be properly approved pursuant to OEM and Meritor approvals. Refer to TP-9441 for axles, SP-8320 for trailer axles, TP-12126 for drivelines, and/or contact Meritor regarding specific application approval questions on any product line.

Front Non-Drive Steer Axles – 5/750/P&L

FD-965	FF-966	MFS-10-144A-N	MFS-12-132C-N	MFS-13-122C-N	MFS-14-143A-N
FF-941	FF-967	MFS-12-122A-N	MFS-12-143A-N	MFS-13-132B-N	
FF-942	FG-941	MFS-12-122B-N	MFS-12E-143A-N	MFS-13-132C-N	
FF-943	FG-943	MFS-12-122C-N	MFS-12-144A-N	MFS-13-143A-N	
FF-944	MFS-10-122A	MFS-12E-122A-N	MFS-13-122A-N	MFS-13-144A-N	
FF-961	MFS-10-143A-N	MFS-12-132B-N	MFS-13-122B-N	MFS-14-122A-N	

Rear Drive Single Axles – 5/750/P&L

RS-19-144/145/A	RS-21-160
MS-19-14X	RS-23-160
MS-21-144	RS-23-161
RS-21-145	RS-23-186

Drivelines

RPL	5/500/P, 1/Unl/P&L
MXL	3/350/P, 1/Unl/P&L
155N	1/Unl/P
92N	1/Unl/P

Rear Drive Tandem/Tridem Axles – 5/750/P&L

RT-34-144/P/A	MA-40-165	MT-40-943
RT-40-145/A	MA-40-175	MT-40-943-SP
RT-40-160/P[1,2]	MT-34-14X/P	RZ-166[2]
RT-46-160/P[1,2]	MT-40-14X/P	RZ-188
RT-46-164EH/P[1,2]	MT-40-14X/P	
RT-50-160/P[1,2]	MT-40-144/P	

[1] These models required for Chip Hauler and Linehaul warranty consideration.
[2] Each vehicle must have a Request for Application Recommendation (RAR) approved by Meritor prior to vehicle build. All RARs must identify the chassis number or VIN. Refer to Product Information Letter #303 and #396 for further details.

LINEHAUL WARRANTY INFORMATION

Brake Components

Cam Q Series Trailer Brakes	5/500/P, 1/100/L
LX500 Feature[1]	5/750/P&L
Q+ Drum Brake™	5/500/P, 1/Unl/P&L
ASA	5/500/P, 1/Unl/P&L
Hubs/Cast Drums and Other Wheel-end Components	1/Unl/P
Hydraulic Disc Brakes	1/Unl/P
All Other Brakes	1/Unl/P
STEELite X30 Drum Brake™[2]	12-Years or Wearable Life/P
EX+ Air Disc Brake™	5/500/P, 1/Unl/L

[1] Includes: bushing, seal, cam, ASA lubrication and wear coverage of 3/500/P&L.

[2] Based on stamped wear diameter max.

Trailer Axles

Beam and Brackets	5/500/P, 1/100/L
Wheel End Systems[1]	
Standard System[2]	1/100/P&L
PreSet by Meritor[3]	5/500/P&L
AxlePak5[4]	5P/L
AxlePak7[5]	7P/L

[1] Includes hub, wheel seals and wheel bearings—all systems require annual inspections and proper documentation to ensure full coverage.

[2] When installed by Meritor.

[3] Requires approved hubcap stating PreSet by Meritor on hubcap face.

[4] When specified with AxlePak5 wheel end system, coverage on MTIS thru-tee and stator is 5/500P, 3/500L.

[5] When specified with AxlePak7 wheel end system, coverage on MTIS thru-tee and stator is 7/750P, 3/500L.

(For brake components and ABS coverage, refer to appropriate product warranties.)

TAG/Pusher Axles[1]

TQ, TQD, TR, TRD Beam and Brackets	5/750/P&L

[1] For brake components and ABS Coverage, refer to appropriate product warranties.

Meritor Tire Inflation System by PSI

MTIS Components	3/500/P&L

Trailer Air Suspension Systems

MPA38/40 (Tandem Axle Parallelogram)[1]	
Major Structural Components	5/500/P, 1/100/L
Curbing Damage Warranty[2]	5/500/P, 1/100/L
Height Control Valve	1/100/P&L
Shock Absorbers	2/200/P&L
Air Springs	2/200/P, 1/100/L
Bushings	7/700/P, 5/500/L
PinLoc Air Controls	1/100/P&L
PinLoc Actuator	3/300/P&L
MPA20 (Single Axle Parallelogram)	
Major Structural Components	5/500/P, 1/100/L
Height Control Valve	1/100/P&L
Shock Absorbers	2/200/P&L
Air Springs	2/200/P, 1/100/L
Bushings	7/700/P, 5/500/L
MTA (Trailing Arm)	
Major Structural Components	5/500/P, 1/100/L
Height Control Valve	1/100/P&L
Shock Absorbers	2/200/P&L
Air Springs & Rebound Straps	2/200/P, 1/100/L
Bushings	5/500/P, 3/300/L

[1] Fastener torque coverage is limited to 2/Unl P&L when torqued by Meritor

(For axle and ABS coverage, refer to appropriate product warranties.)

[2] "Curbing damage" is defined as deformation (bending, buckling, or breakage), caused by sudden impact with a curb or similar fixed object. Damage to the RideSentry slider box (the suspension sliding subframe, consisting of the frame rails, crossmembers, and central A-frame assembly), caused by accidental trailer impact with a curb or similar fixed object, is eligible for warranty coverage. Damage to other components or damage resulting from collision with another vehicle, rollover or fire is not covered under this provision. Warranty is not transferrable to another trailer VIN, and coverage does not apply if the trailer is deemed to be a total loss, scrapped, or otherwise not salvageable.

GENERAL SERVICE WARRANTY INFORMATION

General Service Vehicles

- Aerial Ladder Truck
- Aerial Platform
- Ambulance
- Auto Hauler
- Beverage Truck
- Chip Hauler
- Cross Country Coach
- Flatbed
- Front Engine Commercial Chassis
- Front Engine Integral Coach
- General Freight
- Intercity Coach
- Intermodal Chassis
- Livestock Hauler
- Meat Packer
- Moving Van
- Municipal Truck
- Newspaper Delivery
- Pick-Up and Delivery
- Pipe Hauler
- Platform Auto Hauler
- Pumper
- Rear Engine Integral Coach
- Recreational Vehicles
- Refrigerated Freight
- School Bus
- Stake Truck
- Tanker
- Tanker Truck
- Tour Bus
- Wrecker

General Service Typically Is

- Lower mileage operations (less than 60,000 miles/year)
- Generally, on-road service (less than 10% off-road)
- An average of three (3) miles between starting and stopping

Coverage under Meritor's warranty require that the application of products be properly approved pursuant to OEM and Meritor approvals. Refer to TP-9441 for axles, SP-8320 for trailer axles, TP-12126 for drivelines, and/or contact Meritor regarding specific application approval questions on any product line.

Front Drive/Non-Drive Steer Axles – 2/Unl/P&L

FD-965	FH-941	MFS-7-153C-N	MFS-12E-122A-N	MFS-13-122C-N	MFS-18-135A-N
FF-941	FH-946[1]	MFS-7-163C-N	MFS-12-122B-N	MFS-13-132B-N	MFS-18-193A-N
FF-942	FL-941	MFS-8-113B-N	MFS-12-122C-N	MFS-13-132C-N	MFS-20-133A-N
FF-943	FL-943	MFS-8-143A-N	MFS-12-132B-N	MFS-13-143A-N	MFS-20-135A-N
FF-944	MFS-6-151A-N	MFS-8-153B-N	MFS-12-132C-N	MFS-13-144A-N	MFS-20H-193A-N
FF-946	MFS-6-153B-N	MFS-8-163B-N	MFS-12-143A-N	MFS-14-122A-N	MFS-22H-135A-N
FF-961	MFS-6-162B-N	MFS-10-122A	MFS-12-144A-N	MFS-14-143A-N	MFS-22H-193A-N
FF-966	MFS-6-153C-N	MFS-10-143A-N	MFS-12E-143A-N	MFS-16-122A-N	
FF-967	MFS-6-162C-N	MFS-10-144A-N	MFS-13-122A-N	MFS-16-143A-N	
FG-941	MFS-7-113C-N	MFS-12-122A-N	MFS-13-122B-N	MFS-18-133A-N	

[1] Can also be used with reduced steer angles in tag position in Coach Applications.

Rear Drive Single Axles – 2/Unl/P&L

MS-17-13X	MS-21-144	RC-23-162[1]	MS-26-616	79163
MS-17-14X	MS-23-17X	RC-23-165[1]	MS-26-616-SP	
MS-19-13X	RS-21-145/A	RS-23-160	RS-30-185	
MS-19-14X	RS-21-160	RS-23-161	MS-30-616	
RS-17-144/145/A	RC-22-145	RS-23-186	MS-30-616-SP	
RS-19-144/145/A	RC-22-145/A	RS-24-160	RS-35-380	
MS-21-13X	RC-23-160	RC-25-160	71162	
MS-21-14X	RC-23-161	RS-26-185	71163	

[1] 3/Unl/P&L if PreSet by Meritor.

Rear Drive Tandem – 3/Unl/P&L

RT-40-160/P	RT-46-164EH/P
RT-46-160/P	RT-50-160/P

Drivelines

RPL	4/400/P, 1/Unl/P&L
MXL	3/350/P, 1/Unl/P&L
155N	1/Unl/P
92N	1/Unl/P

Rear Drive Tandem/Tridem Axles – 2/Unl/P&L

MT-34-14X/P	MT-44-14X/P	MT-58-616
RT-34-144/P/A	RT-44-145/P	RT-58-185[1]
MT-40-14X/P	RT-46-169	MT-70-380
MT-40-144/P	MT-52-616	RZ-166
RT-40-145/A	RT-52-185[1]	RZ-188

[1] Each vehicle must have a Request for Application Recommendation (RAR) approved by Meritor prior to vehicle build. All RARs must identify the chassis number or VIN. Refer to Product Information Letter #303 and #396 for further details.

GENERAL SERVICE WARRANTY INFORMATION

Brake Components

Cam Q Series Trailer Brakes	3/Unl/P, 1/Unl/L
LX500 Feature[1]	3/Unl/P&L
Cam P[3]	2/200/P
Cam	3/Unl/P
Q+ Drum Brake™	3/Unl/P&L
Q+ Drum Brake ™[3]	2/200/P&L
ASA	3/Unl/P
ASA[3]	2/200/P
Hubs/Cast Drums and Other Wheel-end Components	1/Unl/P
Hydraulic Disc Brakes	1/Unl/P
All Other Brakes	1/Unl/P
STEELite X30 Drum Brake™[2]	12-Years or Wearable Life/P
EX+ Air Disc Brake™	2/Unl/P&L

[1] Includes: bushing, seal, cam, ASA lubrication and wear coverage of 1/Unl/P.
[2] Based on stamped wear diameter max.
[3] Applies to Tour Bus and Cross Country Coach only.

Trailer Axles

Beam and Brackets[1]	5/Unl/P, 1/Unl/L
Wheel End Systems[2]	
Standard System[3]	1/Unl/P&L
AxlePak5[4]	5P/L
AxlePak7[5]	7P/L

[1] 9000 Series is 3/Unl/P, 1/Unl/L
[2] Includes hub, wheel seals and wheel bearings—all systems require annual inspections and proper documentation to ensure full coverage.
[3] When installed by Meritor.
[4] When specified with AxlePak5 wheel end system, coverage on MTIS thru-tee and stator is 5/500P, 3/500L.
[5] When specified with AxlePak7 wheel end system, coverage on MTIS thru-tee and stator is 7/750P, 3/500L.

(For brake components and ABS coverage, refer to appropriate product warranties.)

Chassis Axles (2000 Series/ChassiPak)

Beam & Brackets	6/Unl/P, 1/Unl/L
Wheel End Systems[1]	
Standard System	1/Unl/P&L
AxlePak7	7P/L
Beam and Brackets	7P/1L

[1] Includes hub, wheel seals and wheel bearings—all systems require annual inspections and proper documentation to ensure full coverage.

Trailer Air Suspension Systems

MPA38/40 (Tandem Axle Parallelogram)[1]	
Major Structural Components	5/Unl/P, 1/Unl/L
Curbing Damage Warranty[2]	5/500/P, 1/100/L
Height Control Valve	1/Unl/P&L
Shock Absorbers	2/Unl/P&L
Air Springs	2/Unl/P, 1/Unl/L
Bushings	7/700/P, 5/500/L
PinLoc Air Controls	1/Unl/P&L
PinLoc Air Actuator	3/Unl/P&L
MPA20 (Single Axle Parallelogram)	
Major Structural Components	5/Unl/P, 1/Unl/L
Height Control Valve	1/Unl/P&L
Shock Absorbers	2/Unl/P&L
Air Springs	2/Unl/P, 1/Unl/L
Bushings	7/700/P, 5/500/L
MTA (Trailing Arm)	
Major Structural Components	5/Unl/P, 1/Unl/L
Height Control Valve	1/Unl/P&L
Shock Absorbers	2/Unl/P&L
Air Springs and Rebound Straps	2/Unl/P, 1/Unl/L
Bushings[3]	5/Unl/P, 3/Unl/L

(For axle and ABS coverage, refer to appropriate product warranties.)
[1] Fastener torque coverage is limited to 2/Unl P&L when torqued by Meritor
[2] "Curbing damage" is defined as deformation (bending, buckling, or breakage), caused by sudden impact with a curb or similar fixed object. Damage to the RideSentry slider box (the suspension sliding subframe, consisting of the frame rails, crossmembers, and central A-frame assembly), caused by accidental trailer impact with a curb or similar fixed object, is eligible for warranty coverage. Damage to other components or damage resulting from collision with another vehicle, rollover or fire is not covered under this provision. Warranty is not transferrable to another trailer VIN, and coverage does not apply if the trailer is deemed to be a total loss, scrapped, or otherwise not salvageable.
[3] Raw wood applications 3/Unl/P, 1/Unl/L

TAG/Pusher Axles

TQ, TQD, TR, TRD Beam and Brackets[1]	3/Unl/P, 1/Unl/L
MC12002, MC14002, MC16003, FH946	2/Unl/P&L

(For brake components and ABS coverage, refer to appropriate product warranties.)
[1] 3/UNL/P&L if sold with PreSet by Meritor.

Meritor® Tire Inflation System by PSI

MTIS Components	3/500/P&L

HEAVY SERVICE WARRANTY INFORMATION

Heavy Service Vehicles

- Airport Rescue Fire (ARF)
- Airport Shuttle
- Asphalt Truck
- Block Truck
- Bottom Dump Trailer Combination
- Cementing Vehicle
- City Bus
- Commercial Pick-Up
- Concrete Pumper
- Construction Material Hauler
- Crash Fire Rescue (CFR)
- Mixer
- Demolition
- Drill Rig
- Dump
- Emergency Service
- Equipment Hauling
- Flatbed Trailer Hauler
- Flatbed Truck
- Fracturing Truck
- Front Loader
- Geophysical Exploration
- Hopper Trailer Combinations
- Landscaping Truck
- Liquid Waste Hauler
- Log Hauling
- Lowboy
- Michigan Special Gravel Trains
- Michigan Special Log Hauler
- Michigan Special Steel Hauler
- Michigan Special Waste Vehicle
- Municipal Dump
- Rapid Intervention Vehicle (RIV)
- Rear Loader (Refuse)
- Recycling Truck
- Residential Pick-Up (Refuse)
- Rigging Truck
- Roll-Off
- Scrap Truck
- Semi-End Dump
- Sewer/Septic Vacuum
- Shuttle Bus
- Side Loader
- Snowplow/Snowblower
- Steel Hauling
- Tanker
- Tank Truck
- Tractors with Pole Trailers
- Tractor/Trailer with Jeeps
- Transfer Dump
- Transfer Vehicle
- Transit Bus
- Trolley
- Utility Truck
- Winch Truck

Heavy Service Typically Is

- Moderate mileage operation (less than 60,000 miles per year)
- On/Off road vocations (10% or more off-road)
- Moderate to frequent stops/starts (up to 10 stops per mile)

Coverage under Meritor's warranty require that the application of products be properly approved pursuant to OEM and Meritor approvals. Refer to TP-9441 for axles, SP-8320 for trailer axles, TP-12126 for drivelines, and/or contact Meritor regarding specific application approval questions on any product line.

Front Drive/Non-Drive Steer Axles – 2/Unl/P&L

FD-965	FH-941	MFS-8-113B-N	MFS-12-132C-N	MFS-13-155	MFS-22H-135A-N	MX-17-140
FF-941	FH-946	MFS-8-153B-N	MFS-12-143A-N	MFS-14-122	MFS-22H-193A-N	MX-19-140
FF-942	FL-941	MFS-8-163B-N	MFS-12-144A-N	MFS-14-143A-N	RF-16-145	MX-21-140
FF-943	FL-943	MFS-10-122A	MFS-12-155	MFS-16-122A-N	RF-21-160	MX-21-160
FF-944	MFS-6-151A-N	MFS-10-143A-N	MFS-13-122	MFS-16-143A-N	MX-10-120	MX-23-160
FF-946	MFS-6-153B	MFS-10-144A-N	MFS-13-122B-N	MFS-18-133A-N	MX-10-120 EVO	MX-810
FF-961	MFS-6-162B	MFS-12-122	MFS-13-122C-N	MFS-18-135A-N	MX-12-120	
FF-966	MFS-6-162C	MFS-12-122B-N	MFS-13-132B-N	MFS-18-193A-N	MX-12-120 EVO	
FF-967	MFS-7-113C-N	MFS-12-122C-N	MFS-13-132C-N	MFS-20-133A-N	MX-14-120	
FG-941	MFS-7-153C-N	MFS-12E-122	MFS-13-143A-N	MFS-20-135A-N	MX-16-120	
FG-943	MFS-7-163C-N	MFS-12-132B-N	MFS-13-144A-N	MFS-20H-193A-N	MX-18-120	

Drivelines

RPL	3/Unl/P, 1/Unl/P&L
92N	1/Unl/P&L
MXL	1/Unl/P&L

Rear Drive Single Axles – 2/Unl/P&L

MS-17-14X	RS-23-160	MS-30-616-SP
RS-17-144/145/A	RC-23-161	RS-30-185/380
MS-19-14X	RS-23-161	MS-35-380
RS-19-144	RS-23-186/380	RS-38-380
MS-21-114	RC-23-162	RC-25-160
MS-21-14X	RC-23-165	RC-26-633
RS-21-145	RS-24-160	MT-58-616
RS-21-145/A	RS-25-160	MT-58-616-SP
RS-21-160	MS-26-616	71162
RC-22-145	MS-26-616-SP	71163
RC-23-160	RS-26-185/380	79163
RH-23-160	MS-30-616	

HEAVY SERVICE WARRANTY INFORMATION

Rear Drive Tandem/Tridem Axles – 2/Unl/P&L

MT-34-14X/P
RT-34-144/P/A
MT-40-14X/P
RT-40-145/A
MT-44-14X/P
RT-44-145/P
RT-46-169
MT-52-616
MT-52-616-SP
RT-52-185/380[1,2]
MT-58-616
MT-58-616-SP
RT-58-185/380[1,2]
RT-70-380
MT-70-380
RZ-166
RZ-188

[1] Axle model designated will vary according to options and variations specified on these axles. Contact Meritor Axle Applications Engineering for details.
[2] Each vehicle must have a Request for Application Recommendation (RAR) approved by Meritor prior to vehicle build. All RARs must identify the chassis number or VIN. Refer to Product Information Letter #303 and #396 for further details.

Brake Components

Cam P	3/Unl/P
Cam P[3]	2/100/P
Cam Cast Plus™	2/100/P&L
Q+ Drum Brake™	3/Unl/P&L
Q+ Drum Brake™[2]	2/100/P&L
ASA	3/Unl/P
ASA[2]	2/100/P
Hubs/Cast Drums and Other Wheel-end Components	1/Unl/P
Hydraulic Disc Brakes	1/Unl/P
All Other Brakes	1/Unl/P
EX+ Air Disc Brake	2/100/P&L

[1] Based on stamped wear diameter max.
[2] Applies to City Bus, Trolley, Shuttle Bus and Airport Shuttle only.
[3] Warranty for all non-Meritor ASAs supplied by Meritor for all Heavy Service vocations is 1/100/P.

Transfer Cases – 1/Unl/P

MTC-4208
MTC-4210
MTC-4213
T-2111
T-2119

Rear Drive Tandem – 3/Unl/P&L

RT-40-160/P/A[3]
RT-46-160/P/A[1,3]
RT-46-164EH/P/A[2,3]
RT-50-160/P/A[3]

[1] U.S. only. Canadian warranty = 1/Unl/P for combination vehicles only.
[2] Axle model designated will vary according to options and variations specified on these axles. Contact Meritor Axle Applications Engineering for details.
[3] Each vehicle must have a Request for Application Recommendation (RAR) approved by Meritor prior to vehicle build. All RARs must identify the chassis number or VIN. Refer to Product Information Letter #303 and #396 for further details.

Meritor Tire Inflation System by PSI

MTIS Components	3/500/P&L

Trailer Air Suspension Systems

MTA (Trailing Arm)	
Major Structural Components[1]	5/Unl/P, 1/Unl/L
Height Control Valve	1/Unl/P&L
Shock Absorbers	2/Unl/P&L
Air Springs	2/Unl/P, 1/Unl/L
Bushings[1]	5/Unl/P, 3/Unl/L

[1] Raw wood applications 3/Unl/P, 1/Unl/L

(For axle and ABS coverage, refer to appropriate product warranties.)

Center Non-drive Axles – 2/Unl/P&L

MC26000
71063
79063

Trailer Axles

Beam and Brackets[1]	5/Unl/P, 1/Unl/L
Wheel End Systems[2]	
Standard System[3]	1/Unl/P&L

[1] 9000 Series is 3/Unl/P, 1/Unl/L.
[2] Includes hub, wheel seals and wheel bearings—all systems require annual inspections and proper documentation to ensure full coverage.
[3] When installed by Meritor.

(For brake components and ABS coverage, refer to appropriate product warranties.)

OFF-HIGHWAY SERVICE WARRANTY INFORMATION

Industrial And Off-Highway Service Vehicles

- Load-On/Load-Off
- Port Tractor
- Rail Yard Spotter
- Roll-On/Roll-Off
- Stevedoring Tractor
- Trailer Spotter
- Yard Jockey
- All-Terrain Crane
- Rough Terrain Crane
- Forestry
- Material Handling
- Specialized Heavy Haul
- Specialized Mining
- Excavator
- Compactor
- Fertilizer Spreader
- Snow Blower
- Mining
- Rail Car Mover
- Loader
- Tow Tractor
- Pushback Tractor

Industrial And Off-Highway Service Typically Is

- Low mileage operation
- Low speed vehicle speed restriction
- Vehicles are **not** typically licensed for highway use
- Six (6) starts/stops per mile (typical)

Coverage under Meritor's warranty require that the application of products be properly approved pursuant to OEM and Meritor approvals. Refer to TP-9441 for axles, TP-12126 for drivelines, and/or contact Meritor regarding specific application approval questions on any product line.

Drive Steer Axles – 1/Unl/P

MOR MOX MOC

Front Non-Drive Steer Axles – 1/Unl/P

FF - 941	MFS-12-143A-N	MFS-18-135A-N
FF - 943	MFS-12-144A-N	MFS-18-193A-N
FF - 961	MFS-13-143A-N	MFS-20-133A-N
FF - 966	MFS-13-144A-N	MFS-20-135A-N
FG - 941	MFS-14-143A-N	MFS-20H-193A-N
FG - 943	MFS-16-122A-N	MFS-22H-135A-N
FL - 941	MFS-16-143A-N	MFS-22H-193A-N
FL - 943	MFS-18-133A-N	MON-Z0 FAMILY

Planetary Axles – 1/Unl/P

MOR MOX MOC MOT

Rear Drive Single Axles – 1/Unl/P

RS-23-186	RS-24-160-SP	RS-30-185
RS-23-380	MS-30-616	RS-30-380
RS-24-160	MS-30-616-SP	MS-35-380

Drivelines – 1/Unl/P

RPL MXL

Rear Drive Tandem Axles – 2/Unl/P

MT-44-14X/P	MT-58-616	RT-44-145/P	RT-50-160/P
MT-52-616	MT-58-616-SP	RT-46-160/P	RZ-166
MT-52-616-SP	MT-70-380	RT-46-164EH/P	

Brake Components

Cam P	3/Unl/P
Q+ Drum Brake™	3/Unl/P&L
ASA	3/Unl/P
Hubs/Cast Drums and Other Wheel-end Components	1/Unl/P
Hydraulic Disc Brakes	1/Unl/P
All Other Brakes	1/Unl/P

TERMS AND CONDITIONS

Coverage Exclusions

Product Description

All
The cost of any repairs, replacements or adjustments to a covered component (1) associated with noise; (2) resulting from the use or installation of non-genuine Meritor components or materials; (3) due to vibration associated with improper operation or misapplication of drivetrain components; and (4) damage resulting from corrosion.

For axle assemblies supplied by Meritor with suspension and interface brackets designed and/or attached by non-Meritor parties, Meritor warranty coverage does not apply to the brackets, bracket attachment methods, and field issues caused by brackets or bracket attachments to any covered component unless specified in a separate OEM agreement.

Front Axles
King Pin Bushings.

Rear Axles
Self-contained traction equalizers and oil filters. The use of NoSPIN differentials will result in the exclusion of axle shafts from warranty considerations. NoSPIN is a product of Eaton.

ASA
Boot and bushing. Bent, broken, over-torqued, missing or otherwise damaged pawl assemblies.

Cam Brake
Brake lining wear and brake shoe “rust-jacking.”

Disc Brake
Pad wear, rotor wear.

Coverage Limitations

Product Description

All
Any claim beyond 60 days from date of repair will not be accepted or honored under this warranty program. Products purchased on an incomplete vehicle (glider) are limited to one year, unlimited miles parts only (1/Unl/P).

Front Axles
Tie rod and tie rod ends limited to 3-year/300,000-mile or published vocational coverage, whichever is less. Wheel seals, gaskets and wheel bearings are covered for 1 year/unlimited miles if the wheel end equipment is supplied and assembled by Meritor.

Rear Axles
Pinion and through shaft seals limited to 3-year/300,000-mile or published vocational coverage, whichever is less, if yoke is installed by Meritor. If yoke is not installed by Meritor, then Meritor does not warrant pinion seals. Wheel seals, gaskets and wheel bearings are covered for 1 year/unlimited miles if the wheel end equipment is supplied and assembled by Meritor.

Rear Axles
The Meritor® breather part number A-2297-C-8765 with A-3196-J-1336 hose must be used for eligibility of any potential warranty consideration relating to contamination and/or loss of lube in axles.

Cam Brake
Limited to bracket, brake spider and camshaft structural integrity.

STEELite X30
Wearable life is up to the discard diameter of the drum.

Disc Brake
Warranty coverage for boots, seals, bushings and pins is 2/200/P. Warranty coverage for pads is 1/100/P.

Warranty coverage on vehicles with 1,850 lb-ft engine torque and over may be reduced on individual drivetrain components. Contact your Meritor representative for specific details.

TERMS AND CONDITIONS

(1) What is Covered by this Commercial Warranty?
Meritor Inc. warrants to the owner ("Owner") that the components listed in this publication, which have been installed by an Original Equipment Manufacturer ("OEM") as original equipment in vehicles licensed for on-highway use, will be free from defects in material and workmanship. This warranty coverage begins only after the expiration of the OEM's vehicle warranty for the applicable covered components. Warranty coverage ends at the expiration of the applicable time period from the date of vehicle purchase by the first Owner, or, the applicable mileage limitation, whichever occurs first. Duration of coverage varies by component and vocation as detailed elsewhere in this warranty statement.

Some components are warranted for parts only and the Owner must pay any labor costs associated with the repair or replacement of the component. Other components are warranted for both parts and reasonable labor to repair or replace the subject component. Components (whether new, used or remanufactured) installed as replacements under this warranty are warranted only for the remainder of the original period of time or mileage under the original warranty.

For certain components, coverage requires the use of specific extended drain interval or synthetic lubricants. For further information about lubrication and maintenance, see Meritor publication Maintenance Manual Number I and the applicable Meritor maintenance manual for the product in question. Other conditions and limitations applicable to this warranty are detailed below.

(2) Designation of Vocational Use Required.
To obtain warranty coverage, each Owner must notify Meritor through the OEM new truck and/or trailer dealer of the intended vocational use of the vehicle into which the Meritor components have been incorporated prior to the vehicle in-service date. This notification may be accomplished by registering the vehicle through your OEM new truck and/or trailer dealer or with Meritor directly. Failure to notify Meritor of (I) the intended vocational use of the vehicle or (II) a change in vocational use from that which was originally designated, will result in the application of a one year, unlimited mileage, parts only warranty (1/Unl/P) from the initial in-service date.

A second Owner and each subsequent Owner must also notify Meritor as to the intended vocational use of the vehicle. This notification can be sent directly to Meritor or through the OEM new truck and/or trailer dealer. The duration and mileage coverage of this warranty cannot exceed the coverage extended to the first Owner after his or her initial designation of vocational use.

Coverage under Meritor's warranty requires that the application of products be properly approved pursuant to OEM and Meritor approvals. Refer to TP-9441 for axles, SP-8320 for trailer axles, TP-12126 for drivelines, and/or contact Meritor regarding specific application approval questions on any product line.

(3) What is the Cost of this Warranty?
There is no charge to the Owner for this warranty.

(4) What is not Covered by this Warranty?
This warranty does not cover normal wear and tear; nor does it cover a component that fails, malfunctions or is damaged as a result of (I) improper installation, adjustment, repair or modification (including the use of unauthorized attachments or changes or modification in the vehicle's configuration, usage, or vocation from that which was originally approved by Meritor), (II) accident, natural disaster, abuse, or improper use (including loading beyond the specified maximum vehicle weight or altering engine power settings to exceed the axle and/or driveline capacity), or (III) improper or insufficient maintenance (including deviation from approved lubricants, change intervals, or lube levels). This warranty does not cover any component or part that is not sold by Meritor. For vehicles that operate full or part time outside of the United States and Canada, a one year, unlimited mileage, parts only warranty (1/Unl/P) will apply.

(5) Remedy.
The exclusive remedy under this warranty shall be the repair or replacement of the defective component at Meritor's option. Meritor reserves the right to require that all applicable failed materials are available and/or returned to Meritor for review and evaluation.

(6) Disclaimer of Warranty.
THIS WARRANTY IS EXPRESSLY IN LIEU OF ALL OTHER WARRANTIES OR CONDITIONS, EXPRESSED, IMPLIED OR STATUTORY INCLUDING ANY IMPLIED WARRANTY OF MERCHANTABILITY OR FITNESS FOR PARTICULAR PURPOSE.

(7) Limitation of Remedies.
In no event shall Meritor be liable for special, incidental, indirect, or consequential damages of any kind or under any legal theory, including, but not limited to, towing, downtime, lost productivity, cargo damage, taxes, or any other losses or costs resulting from a defective covered component.

(8) To Obtain Service.
If the Owner discovers within the applicable coverage period a defect in material or workmanship, the Owner must promptly give notice to either Meritor or the dealer from which the vehicle was purchased. To obtain service, the vehicle must be taken to any participating OEM new truck and/or trailer dealer or authorized Meritor service location. The dealer will inspect the vehicle and contact Meritor for an evaluation of the claim. When authorized by Meritor, the dealer will repair or replace during the term of this warranty any defective Meritor component covered by this warranty.

(9) Entire Agreement.
This is the entire agreement between Meritor and the Owner about warranty and no Meritor employee or dealer is authorized to make any additional warranty on behalf of Meritor. This agreement allocates the responsibilities for component failure between Meritor and the Owner.

Vehicle models, brands and names depicted herein are the property of their respective owners, and are not in any way associated with Meritor, Inc., or its affiliates.

MERITOR®

Meritor Heavy Vehicle Systems, LLC
2135 West Maple Road
Troy, Michigan 48084 USA

For more information:
call Ontrac at 866-668-7221
or visit meritor.com

©2017 Meritor, Inc.
Litho in USA, SP-95155
Revised 01-17 (47865/11900)

Fire and Rescue Apparatus

Three (3) Year Material and Workmanship
Meritor Wabco ABS Brake System
Limited Warranty

1. LIMITED WARRANTY

Subject to the limitations and exclusions set forth below, Pierce Manufacturing provides the following warranty to the Buyer:

Coverage:	**The Meritor Wabco ABS brake system shall be covered by Meritor Wabco as indicated in the attached Meritor Wabco warranty coverage description**
Warranty Begins:	**The date of the original purchase invoice (issued when the product ships from the factory).**
Warranty Period Ends After:	**Three (3) Year**
Conditions and Exclusions: **See Also Paragraphs 2 thru 4**	**The exclusions listed in the attached Meritor Wabco warranty description shall apply.**

This limited warranty shall apply only if the product is properly maintained in accordance with Pierce's maintenance instructions and manuals and is used in service which is normal to the particular model. Normal service means service which does not subject the product to stresses or impacts greater than normally result from careful use. If the Buyer discovers a defect or nonconformity, it must notify Pierce in writing within thirty (30) days after the date of discovery, but in any event prior to the expiration of the warranty period. THIS LIMITED WARRANTY MAY NOT BE ASSIGNED OR OTHERWISE TRANSFERRED BY THE BUYER TO ANY SUBSEQUENT USER OR PURCHASER OR TO ANY OTHER PERSON OR ENTITY.

Notwithstanding anything to the contrary herein, Pierce makes no warranty whatsoever as to:

(a) any integral parts, components, attachments or trade accessories of or to the product that are not manufactured by Pierce, including but not limited to engines, transmissions, drivelines, axles, water pumps and generators; with respect to all such parts, components, attachments and accessories, Pierce shall assign to Buyer the applicable warranties, if any, made by the respective manufacturers thereof;

(b) any vehicle, chassis, or component, part, attachment or accessory damaged by misuse, neglect, fire, exposure to severe environmental or chemical conditions, acidic environment, improper maintenance, accident, crash, or force majeure such as natural disaster, lightning, earthquake, windstorm, hail, flood, war or riot;

(c) any vehicle, chassis or component, part, attachment or accessory that has been repaired, altered or assembled in any way by any person or entity other than Pierce which, in the sole judgment of Pierce, adversely affects the performance, stability or purpose for which it was manufactured; or

(d) products or parts which may in the ordinary course wear out and have to be replaced during the warranty period, including, but not limited to, tires, fluids, gaskets and light bulbs. Pierce assumes no responsibility for the assembly of its parts or subassemblies into finishing products or vehicles unless the assembly is performed by Pierce.

The original purchaser may void this warranty in part or in its entirety if the product is repaired or replaced (a) without prior written approval of the Pierce Customer Service Department; or (b) at a facility which has not been approved by Pierce as to technical capability. Any repairs, modifications, alterations or aftermarket parts added after manufacture without the authorization of Pierce may void this warranty.

2. DISCLAIMERS OF WARRANTIES

THE WARRANTY SET FORTH IN PARAGRAPH 1 IS THE SOLE AND EXCLUSIVE WARRANTY GIVEN BY PIERCE. PIERCE HEREBY DISCLAIMS AND EXCLUDES ALL OTHER WARRANTIES, WHETHER EXPRESS, IMPLIED OR STATUTORY, INCLUDING WITHOUT LIMITATION ANY WARRANTY OF MERCHANTABILITY, ANY WARRANTY OF FITNESS FOR A PARTICULAR PURPOSE, AND ANY WARRANTIES ARISING FROM COURSE OF DEALING OR USAGE OF TRADE.

3. BUYER'S EXCLUSIVE REMEDY.

If the product fails to conform to the warranty set forth in paragraph 1 during the warranty period, and such nonconformity is not due to misuse, neglect, accident or improper maintenance, Buyer must notify Pierce within the time period specified in paragraph 1, and shall make the product available for inspection by Pierce or its designated agent. At the request of Pierce, any allegedly defective product shall be returned to Pierce by Buyer for examination and/or repair. Buyer shall be responsible for the cost of such transportation, and for risk of loss of or damage to the product during transportation. Within a reasonable time, Pierce shall repair or replace (at Pierce's option and expense) any nonconforming or defective parts. Repair or replacement shall be made only by a facility approved in advance in writing by Pierce. THIS REMEDY SHALL BE THE EXCLUSIVE AND SOLE REMEDY FOR ANY BREACH OF WARRANTY.

4. EXCLUSION OF CONSEQUENTIAL AND INCIDENTAL DAMAGES.

Notwithstanding anything to the contrary herein or in any agreement between Pierce and Buyer, IN NO EVENT SHALL PIERCE BE LIABLE FOR ANY CONSEQUENTIAL, INCIDENTAL, SPECIAL, INDIRECT, OR PUNITIVE DAMAGES WHATSOEVER, WHETHER ARISING OUT OF BREACH OF CONTRACT, WARRANTY, TORT (INCLUDING NEGLIGENCE AND STRICT LIABILITY) OR OTHER THEORY OF LAW OR EQUITY, WITH RESPECT TO VEHICLES OR OTHER PRODUCTS SOLD BY PIERCE, OR THEIR OPERATION OR FAILURE TO OPERATE, OR ANY DEFECTS THEREIN, OR ANY UNDERTAKINGS, ACTS OR OMISSIONS RELATED THERETO, REGARDLESS OF WHETHER PIERCE HAS BEEN INFORMED OF THE POSSIBILITY OF ANY SUCH DAMAGES. Without limiting the generality of the foregoing, Pierce specifically disclaims any liability for property or personal injury damages, penalties, damages for lost profits or revenues, loss of vehicles or products or any associated equipment, cost of substitute vehicles or products, down-time, delay damages, any other types of economic loss, or for any claims by any third party for any such damages.

Note: Any Surety Bond, if a part of the sale of the vehicle as to which this limited warranty is provided, applies only to this Pierce Basic One Year Limited Warranty for such vehicle, and not to other warranties made by Pierce in a separate document (if any) or to the warranties (if any) made by any manufacturer (other than Pierce) of any part, component, attachment or accessory that is incorporated into or attached to the vehicle.



MERITOR WABCO

Safety Strong. Efficiency Smart.

Warranty
Model Year 2018 Vehicles

SIMPLER IS BETTER

Warranty coverage is essential to protecting your investment. But understanding the full details of your coverage can be challenging. This straightforward approach allows you, our valued customer, to better understand how your specific vehicle applications will be covered in your region. Our component warranty coverage is provided according to vocation/usage categories listed below.

- Linehaul covers high mileage operation (over 60,000 miles/year) on well maintained major highways of concrete or asphalt construction.
- General Service covers moderate mileage operations (less than 60,000 miles/year) on well maintained public roads (less than 10 percent off-road) typically with less than three (3) stops per mile.
- Heavy Service (Vocational) covers vehicles with more than 10 percent off-road OR moderate to frequent starts/stops typically with more than three (3) stops per mile.
- Off-Highway Service covers lower mileage operations. Vehicles are not typically licensed for highway use.

CONTENTS

Linehaul Service 4
General Service 4
Heavy Service 5
Industrial/Off-Highway Service 6
Terms and Conditions 7

How to Read Warranty Coverage (Example)

Number of Years	Mileage (in thousands) Unl=Unlimited	P=Parts Only P&L=Parts & Labor
3	300	P

HEAVY SERVICE (VOCATIONAL) WARRANTY INFORMATION

Heavy Service Vehicles

- Airport Rescue Fire (ARF)
- Airport Shuttle
- Asphalt Truck
- Block Truck
- Bottom Dump Trailer Combination
- Cementing Vehicle
- City Bus
- Commercial Pick-Up
- Concrete Pumper
- Construction Material Hauler
- Crash Fire Rescue (CFR)
- Mixer
- Demolition
- Drill Rig
- Dump
- Emergency Service
- Equipment Hauling
- Flatbed Trailer Hauler
- Flatbed Truck
- Fracturing Truck
- Front Loader
- Geophysical Exploration
- Hopper Trailer Combinations
- Landscaping Truck
- Liquid Waste Hauler
- Log Hauling
- Lowboy
- Michigan Special Gravel Trains
- Michigan Special Log Hauler
- Michigan Special Steel Hauler
- Michigan Special Waste Vehicle
- Municipal Dump
- Newspaper Delivery
- Package Delivery
- Pick-up and Delivery
- Rapid Intervention Vehicle (RIV)
- Rear Loader
- Recycling Truck
- Residential Pick-Up/Waste
- Rigging Truck
- Roll-Off
- Scrap Truck
- Semi-End Dump
- Sewer/Septic Vacuum
- Shuttle Bus
- Side Loader
- Snowplow/Snowblower
- Steel Hauling
- Tanker
- Tank Truck
- Tractors with Pole Trailers
- Tractor/Trailer with Jeeps
- Transfer Dump
- Transfer Vehicle
- Transit Bus
- Trolley
- Utility Truck
- Winch Truck

Heavy Service Typically Is

- On/Off road vocations (10% or more off-road) OR
- Moderate to frequent starts/stops typically more than three (3) stops per mile

Meritor WABCO Components[1]

ABS (Anti-Lock Braking System) Air	3/300/P&L
ABS (Anti-Lock Braking System) Hydraulic	2/200/P&L
Electronic Braking System (EBS)	3/300/P&L
Electronic Stability Control (ESC)	3/300/P&L
Roll Stability Control (RSC)	3/300/P&L
Air Dryers (ALL)	1/100/P&L
Leveling Valves	1/100/P&L
Air Brake Valves	1/100/P&L
Emission Valves (SCR)	2/200/P&L
Clutch Controls	2/200/P&L
Air Compressors (ALL)[2]	1/100/P&L
OnGuard™	3/300/P&L
OnGuardACTIVE™	3/300/P&L
OnLane™ Lane Departure Warning	3/300/P&L
Blind Spot Detection	3/300/P&L
OptiRide™	2/200/P&L
Trailer Roll Stability Support (RSS)	3/300/P&L
Trailer Control Line Filter[3]	1/100/P&L
Trailer ABS Valve[3]	3/300/P&L

[1] WABCO and Meritor WABCO branded components.
[2] WABCO compressors installed on Cummins, Mercedes, and DDC engines are not warranted or serviced by Meritor WABCO. Please contact your respective dealer/distributor of those engines for warranty and servicing.
[3] An extended warranty of 4/400/P will be applied when a Meritor WABCO Trailer Control Line Filter is used in combination with a Meritor WABCO Trailer ABS valve.



TERMS AND CONDITIONS

Coverage Exclusions

Product Description

All

The cost of any repairs, replacements or adjustments to a covered product due to the following: (1) damage to the product or its component parts caused by incorrect use, installation, maintenance or repair, including without limitation (a) improper fit of mating components or brackets, (b) damaged threads, (c) cut, broken, chafed, pinched or otherwise damaged wiring (sensors, harnesses and connectors), (d) damaged sensors from removal when seized in block, or associated with sensor adjustments/ alignments, and (e) damage resulting from the use or installation of non-genuine Meritor WABCO components or materials; (2) damage to the product, its component parts, or diminished product or component part performance due to incorrect operation, deviation from approved conditions or misapplication; (3) any unauthorized disassembly of the product or its component parts including without limitation (a) obliterated, defaced or missing WABCO or Meritor WABCO name plate, serial numbers or label identifying the device as a Meritor WABCO product or WABCO component, (b) changes to sealed adjusting screws, and (c) opening or attempted repair of non-serviceable components; (4) malfunction of the component due to internal contamination out of the vehicle system including without limitation (a) water and other contamination damage that is due to the use of a non-genuine air dryer cartridge or (b) valve failures due to contamination in air system, (5) complaints associated with noise, (6) damage resulting from corrosion (including oxidation of electrical devices and connections).

Air Dryers

Mounting brackets (see vehicle OEM). Desiccant cartridge housing only.

Air System Components

Normal wear items; Gladhand seals, dash valve knobs, valve actuation handles, treadles, pedals.

ABS, Electronic Stability Control (ESC), Roll Stability Control (RSC), OptiRide™, OnGuard™ and OnLane™, collectively "Electronics"

Failure of electronic components due to overvoltage condition, improper grounding, electrostatic discharge (ESD), improper shielding, electromagnetic interference (EMI), or other wiring or installation issues.

Malfunctions and failure codes caused by other electronic subsystem failures (data bus, engine, transmission, dashboard, etc.)

Hydraulic Components

For certain components, brake fluid DOT3 or DOT4 is used as the operating medium. Use of any other fluid will void all warranties associated with that component. For hydraulic braking applications the brake fluid is considered a maintenance item. Maintenance intervals are listed in TB-1367.

Coverage Limitations

Product Description

All

Any claim beyond 60 days from date of repair will not be accepted or honored under this warranty program.

Products purchased on an incomplete vehicle (glider) are limited to one year, 1/Unl/P.

For vehicles that operate full- or part-time outside of the United States and Canada, a 1-Year/Unlimited Miles parts only (1/Unl/P) will apply.

TOOLBOX™ Software

Proper diagnostics of Meritor WABCO Electronics may require the latest version of TOOLBOX™. Additional labor due to use of an outdated version of TOOLBOX™. TOOLBOX™ software, and/or the time to purchase or install latest version of TOOLBOX™ are not covered under product warranty.

TERMS AND CONDITIONS

(1) What is Covered by this Commercial Warranty?
Meritor WABCO Vehicle Control Systems warrants to the owner ("Owner") that the components listed in this publication, which have been installed by an Original Equipment Manufacturer ("OEM") as original equipment will be free from defects in material and workmanship. This warranty coverage begins from the original in-service date to the limits provided and runs concurrently with any warranties provided by OEMs and/or any service contracts that cover the components listed in this publication, if any. If the components listed in this publication are covered by an OEM warranty and/or service contract, then the OEM's warranty and/or service contract shall supersede Meritor WABCO's warranty and Owner shall comply with all OEM's warranty and/or service contract requirements for claims under such OEM's warranty and/or service contract until those agreements expire. Once those agreements expire and provided the Meritor WABCO warranty has not expired under the terms stated above, the Meritor WABCO warranty would be in effect until its expiration date.

Warranty coverage ends at the expiration of the applicable time period from the date of vehicle purchase by the first Owner, or, the applicable mileage limitation, whichever occurs first. Duration of coverage varies by component and vocation as detailed previously in this publication. Some components are warranted for parts only and the Owner must pay any labor costs associated with the repair or replacement of the component. Other components are warranted for both parts and reasonable labor to repair or replace the subject component. Additional diagnostic time due to use of an outdated version of TOOLBOX™, time to purchase or install latest version of TOOLBOX™ are the responsibility of the authorized Meritor WABCO service location and are not covered under product warranty. Components installed as replacements under this warranty are warranted only for the remainder of the original period of time or mileage under the original warranty.

(2) Designation of Vocational Use Required.
To obtain warranty coverage, each Owner must notify Meritor WABCO through the OEM new truck and/or trailer dealer of the intended vocational use of the vehicle into which the Meritor WABCO components have been incorporated prior to the vehicle in-service date. This notification may be accomplished by registering the vehicle through your OEM new truck and/or trailer dealer or with Meritor WABCO directly. Failure to notify Meritor WABCO of (I) the intended vocational use of the vehicle or (II) a change in vocational use from that which was originally designated, will result in the application of a one year, unlimited mileage, parts only warranty (1/Unl/P) from the initial in-service date.

A second Owner and each subsequent Owner must also notify Meritor WABCO as to the intended vocational use of the vehicle. This notification can be sent directly to Meritor WABCO or through the OEM new truck and/or trailer dealer. The duration and mileage coverage of this warranty cannot exceed the coverage extended to the first Owner after his or her initial designation of vocational use.

Coverage under Meritor WABCO's warranty requires that the application of products be properly approved pursuant to OEM and Meritor WABCO, approvals.

(3) What is the Cost of this Warranty?
There is no charge to the Owner for this warranty.

(4) What is not Covered by this Warranty?
In addition to the items listed on page 7, this warranty does not cover normal wear and tear, or service items; nor does it cover a component that fails, malfunctions or is damaged as a result of (a) improper handling, storage, installation, adjustment, repair or modification including the use of unauthorized attachments or changes or modification in the vehicle's configuration, usage, or vocation from that which was originally approved by Meritor WABCO, (b) accident, fire or other casualty, natural disaster, road debris, negligence, misuse, abuse, or improper use (including loading beyond the specified maximum vehicle weight or altering engine power settings to exceed the brake system capacity), or (c) improper or insufficient maintenance (including deviation from maintenance intervals, approved lubricants, or lube levels). This warranty does not cover any component or part that is not sold by Meritor WABCO.

(5) Remedy.
The exclusive remedy under this warranty shall be the repair or replacement of the defective component at Meritor WABCO's option. Meritor WABCO reserves the right to require that all applicable covered components are available and/or returned to Meritor WABCO for review and evaluation.

(6) DISCLAIMER OF WARRANTY.
THIS WARRANTY IS EXPRESSLY IN LIEU OF ALL OTHER WARRANTIES OR CONDITIONS, EXPRESS, IMPLIED OR STATUTORY INCLUDING ANY IMPLIED WARRANTY OF MERCHANTABILITY OR FITNESS FOR PARTICULAR PURPOSE. SOME STATES LIMIT OR DO NOT ALLOW THE DISCLAIMER OF IMPLIED OR OTHER WARRANTIES, SO THE ABOVE LIMITATION OR EXCLUSION MAY NOT APPLY TO THE EXTENT SUCH STATE'S LAW IS APPLICABLE TO THESE TERMS.

(7) LIMITATION OF REMEDIES.
IN NO EVENT SHALL MERITOR WABCO BE LIABLE FOR SPECIAL, INCIDENTAL, INDIRECT, OR CONSEQUENTIAL DAMAGES OF ANY KIND OR UNDER ANY LEGAL THEORY, INCLUDING, BUT NOT LIMITED TO, TOWING, DOWNTIME, LOST PRODUCTIVITY, CARGO DAMAGE, TAXES, LOST PROFITS, COSTS OF PROCUREMENT OF A SUBSTITUTE COMPONENT OR ANY OTHER LOSSES OR COSTS RESULTING FROM A COVERED COMPONENT. SOME STATES DO NOT ALLOW THE EXCLUSION OR LIMITATION OF SPECIAL, INCIDENTAL, INDIRECT OR CONSEQUENTIAL DAMAGES, SO THE ABOVE LIMITATION OR EXCLUSION MAY NOT APPLY TO THE EXTENT SUCH STATE'S LAW IS APPLICABLE TO THESE TERMS.

(8) TIME LIMIT ON COMMENCING LEGAL ACTION.
ANY LEGAL ACTION OR CLAIM ARISING FROM OR RELATED TO THIS WARRANTY, IN CONTRACT OR OTHERWISE, MUST BE COMMENCED WITHIN ONE YEAR FROM THE ACCRUAL OF THAT CAUSE OF ACTION, OR BE BARRED FOREVER.

(9) To Obtain Service.
If the Owner discovers within the applicable coverage period a defect in material or workmanship, the Owner must promptly give notice to either Meritor WABCO or the dealer from which the vehicle was purchased. To obtain service, the vehicle must be taken to any participating OEM new truck and/or trailer dealer or authorized Meritor WABCO service location. The dealer will inspect the vehicle and contact Meritor WABCO for an evaluation of the claim. When authorized by Meritor WABCO, the dealer will repair or replace during the term of this warranty any defective Meritor WABCO component covered by this warranty.

(10) Entire Agreement.
This is the entire agreement between Meritor WABCO and the Owner about warranty and no Meritor, Meritor WABCO employee, or dealer is authorized to make any additional warranty on behalf of Meritor WABCO unless in writing and signed by an authorized representative of Meritor WABCO.

For more information on
Meritor WABCO Warranty, call
our OnTrac Customer Service team
at 866-OnTrac1 (866-668-7221)
or visit meritorwabco.com.

Litho in USA. Revised 06/17.
SP-1375 (47865/11900)
Meritor WABCO Vehicle Control Systems
2135 West Maple Road, Troy, Michigan 48084, USA
Phone: 866-ONTRAC1 (866-668-7221) Fax: 248-435-8002

meritorwabco.com

©2017 Meritor WABCO Vehicle Control Systems
Meritor WABCO Vehicle Control Systems is a
joint venture of Meritor™ and WABCO

Fire and Rescue Apparatus

Ten (10) Year Structural Integrity
Custom Cab
Limited Warranty

1. LIMITED WARRANTY

Subject to the limitations and exclusions set forth below, Pierce Manufacturing provides the following warranty to the Buyer:

Coverage:	**The Pierce Custom Cab shall be free from structural failures caused by defects in material and workmanship**
Warranty Begins:	**The date of the original purchase invoice (issued when the product ships from the factory).**
Warranty Period Ends After:	**Ten (10) Years - or - 100,000 Miles**
Conditions and Exclusions: **See Also Paragraphs 2 thru 4**	**This warranty applies only to the cab tubular support and mounting structures and other structural components of the cab of the vehicle model, as identified in the Pierce specifications for the Fire and Rescue Apparatus.** **This warranty does not apply to damage caused by corrosion.**

This limited warranty shall apply only if the product is properly maintained in accordance with Pierce's maintenance instructions and manuals and is used in service which is normal to the particular model. Normal service means service which does not subject the product to stresses or impacts greater than normally result from careful use. If the Buyer discovers a defect or nonconformity, it must notify Pierce in writing within thirty (30) days after the date of discovery, but in any event prior to the expiration of the warranty period. THIS LIMITED WARRANTY MAY NOT BE ASSIGNED OR OTHERWISE TRANSFERRED BY THE BUYER TO ANY SUBSEQUENT USER OR PURCHASER OR TO ANY OTHER PERSON OR ENTITY.

Notwithstanding anything to the contrary herein, Pierce makes no warranty whatsoever as to:

(a) any integral parts, components, attachments or trade accessories of or to the product that are not manufactured by Pierce, including but not limited to engines, transmissions, drivelines, axles, water pumps and generators; with respect to all such parts, components, attachments and accessories, Pierce shall assign to Buyer the applicable warranties, if any, made by the respective manufacturers thereof;

(b) any vehicle, chassis, or component, part, attachment or accessory damaged by misuse, neglect, fire, exposure to severe environmental or chemical conditions, acidic environment, improper maintenance, accident, crash, or force majeure such as natural disaster, lightning, earthquake, windstorm, hail, flood, war or riot;

(c) any vehicle, chassis or component, part, attachment or accessory that has been repaired, altered or assembled in any way by any person or entity other than Pierce which, in the sole judgment of Pierce, adversely affects the performance, stability or purpose for which it was manufactured; or

(d) products or parts which may in the ordinary course wear out and have to be replaced during the warranty period, including, but not limited to, tires, fluids, gaskets and light bulbs. Pierce assumes no responsibility for the assembly of its parts or subassemblies into finishing products or vehicles unless the assembly is performed by Pierce.

The original purchaser may void this warranty in part or in its entirety if the product is repaired or replaced (a) without prior written approval of the Pierce Customer Service Department; or (b) at a facility which has not been approved by Pierce as to technical capability. Any repairs, modifications, alterations or aftermarket parts added after manufacture without the authorization of Pierce may void this warranty.

2. DISCLAIMERS OF WARRANTIES

THE WARRANTY SET FORTH IN PARAGRAPH 1 IS THE SOLE AND EXCLUSIVE WARRANTY GIVEN BY PIERCE. PIERCE HEREBY DISCLAIMS AND EXCLUDES ALL OTHER WARRANTIES, WHETHER EXPRESS, IMPLIED OR STATUTORY, INCLUDING WITHOUT LIMITATION ANY WARRANTY OF MERCHANTABILITY, ANY WARRANTY OF FITNESS FOR A PARTICULAR PURPOSE, AND ANY WARRANTIES ARISING FROM COURSE OF DEALING OR USAGE OF TRADE.

3. BUYER'S EXCLUSIVE REMEDY.

If the product fails to conform to the warranty set forth in paragraph 1 during the warranty period, and such nonconformity is not due to misuse, neglect, accident or improper maintenance, Buyer must notify Pierce within the time period specified in paragraph 1, and shall make the product available for inspection by Pierce or its designated agent. At the request of Pierce, any allegedly defective product shall be returned to Pierce by Buyer for examination and/or repair. Buyer shall be responsible for the cost of such transportation, and for risk of loss of or damage to the product during transportation. Within a reasonable time, Pierce shall repair or replace (at Pierce's option and expense) any nonconforming or defective parts. Repair or replacement shall be made only by a facility approved in advance in writing by Pierce. THIS REMEDY SHALL BE THE EXCLUSIVE AND SOLE REMEDY FOR ANY BREACH OF WARRANTY.

4. EXCLUSION OF CONSEQUENTIAL AND INCIDENTAL DAMAGES.

Notwithstanding anything to the contrary herein or in any agreement between Pierce and Buyer, IN NO EVENT SHALL PIERCE BE LIABLE FOR ANY CONSEQUENTIAL, INCIDENTAL, SPECIAL, INDIRECT, OR PUNITIVE DAMAGES WHATSOEVER, WHETHER ARISING OUT OF BREACH OF CONTRACT, WARRANTY, TORT (INCLUDING NEGLIGENCE AND STRICT LIABILITY) OR OTHER THEORY OF LAW OR EQUITY, WITH RESPECT TO VEHICLES OR OTHER PRODUCTS SOLD BY PIERCE, OR THEIR OPERATION OR FAILURE TO OPERATE, OR ANY DEFECTS THEREIN, OR ANY UNDERTAKINGS, ACTS OR OMISSIONS RELATED THERETO, REGARDLESS OF WHETHER PIERCE HAS BEEN INFORMED OF THE POSSIBILITY OF ANY SUCH DAMAGES. Without limiting the generality of the foregoing, Pierce specifically disclaims any liability for property or personal injury damages, penalties, damages for lost profits or revenues, loss of vehicles or products or any associated equipment, cost of substitute vehicles or products, down-time, delay damages, any other types of economic loss, or for any claims by any third party for any such damages.

Note: Any Surety Bond, if a part of the sale of the vehicle as to which this limited warranty is provided, applies only to this Pierce Basic One Year Limited Warranty for such vehicle, and not to other warranties made by Pierce in a separate document (if any) or to the warranties (if any) made by any manufacturer (other than Pierce) of any part, component, attachment or accessory that is incorporated into or attached to the vehicle.

Fire and Rescue Apparatus

Ten (10) Year Pro-Rated Paint and Corrosion Cab

Limited Warranty

1. LIMITED WARRANTY

Subject to the limitations and exclusions set forth below, Pierce Manufacturing provides the following warranty to the Buyer:

Coverage:	**Exterior surfaces of the cab painted by Pierce shall be free from blistering, peeling, corrosion or any other adhesion defect caused by defective manufacturing methods or paint material selection.**
Warranty Begins:	**The date of the original purchase invoice (issued when the product ships from the factory).**
Warranty Period Ends After:	**Ten (10) Years**
Conditions and Exclusions: **See Also Paragraphs 2 thru 4**	**This limited warranty is applicable to the vehicle in the following percentage costs of warranty repair, if any:** **Topcoat Durability & Appearance: Gloss, Color Retention & Cracking** **0-72 months 100%** **73-96 months 50%** **97-120 months 25%** **Integrity of Coating System: Adhesion, Blistering/Bubbling** **0-36 months 100%** **37-84 months 50%** **85-120 months 25%** **Corrosion: Dissimilar Metal and Crevice** **0-36 months 100%** **37-48 months 50%** **49-72 months 25%** **73-120 months 10%** **Corrosion Perforation** **0-120 months 100%** **This limited warranty applies only to exterior paint. Paint on the vehicle's interior is warranted only under the Pierce Basic One Year Limited Warranty.** **Items not covered by this warranty include:** **(a) Damage from lack of maintenance and cleaning (proper cleaning and maintenance procedures are detailed in the Pierce operation and maintenance manual).** **(b) UV paint fade.** **(c) Any cab not manufactured by Pierce.**

This limited warranty shall apply only if the product is properly maintained in accordance with Pierce's maintenance instructions and manuals and is used in service which is normal to the particular model. Normal service means service which does not subject the product to stresses or impacts greater than normally result from careful use. If the Buyer discovers a defect or nonconformity, it must notify Pierce in writing within thirty (30) days after the date of discovery, but in any event prior to the expiration of the warranty period. THIS LIMITED WARRANTY MAY NOT BE ASSIGNED OR OTHERWISE TRANSFERRED BY THE BUYER TO ANY SUBSEQUENT USER OR PURCHASER OR TO ANY OTHER PERSON OR ENTITY.

Notwithstanding anything to the contrary herein, Pierce makes no warranty whatsoever as to:

(a) any integral parts, components, attachments or trade accessories of or to the product that are not manufactured by Pierce, including but not limited to engines, transmissions, drivelines, axles, water pumps and generators; with respect to all such parts, components, attachments and accessories, Pierce shall assign to Buyer the applicable warranties, if any, made by the respective manufacturers thereof;

(b) any vehicle, chassis, or component, part, attachment or accessory damaged by misuse, neglect, fire, exposure to severe environmental or chemical conditions, acidic environment, improper maintenance, accident, crash, or force majeure such as natural disaster, lightning, earthquake, windstorm, hail, flood, war or riot;

(c) any vehicle, chassis or component, part, attachment or accessory that has been repaired, altered or assembled in any way by any person or entity other than Pierce which, in the sole judgment of Pierce, adversely affects the performance, stability or purpose for which it was manufactured; or

(d) products or parts which may in the ordinary course wear out and have to be replaced during the warranty period, including, but not limited to, tires, fluids, gaskets and light bulbs. Pierce assumes no responsibility for the assembly of its parts or subassemblies into finishing products or vehicles unless the assembly is performed by Pierce.

The original purchaser may void this warranty in part or in its entirety if the product is repaired or replaced (a) without prior written approval of the Pierce Customer Service Department; or (b) at a facility which has not been approved by Pierce as to technical capability. Any repairs, modifications, alterations or aftermarket parts added after manufacture without the authorization of Pierce may void this warranty.

2. DISCLAIMERS OF WARRANTIES

THE WARRANTY SET FORTH IN PARAGRAPH 1 IS THE SOLE AND EXCLUSIVE WARRANTY GIVEN BY PIERCE. PIERCE HEREBY DISCLAIMS AND EXCLUDES ALL OTHER WARRANTIES, WHETHER EXPRESS, IMPLIED OR STATUTORY, INCLUDING WITHOUT LIMITATION ANY WARRANTY OF MERCHANTABILITY, ANY WARRANTY OF FITNESS FOR A PARTICULAR PURPOSE, AND ANY WARRANTIES ARISING FROM COURSE OF DEALING OR USAGE OF TRADE.

3. BUYER'S EXCLUSIVE REMEDY.

If the product fails to conform to the warranty set forth in paragraph 1 during the warranty period, and such nonconformity is not due to misuse, neglect, accident or improper maintenance, Buyer must notify Pierce within the time period specified in paragraph 1, and shall make the product available for inspection by Pierce or its designated agent. At the request of Pierce, any allegedly defective product shall be returned to Pierce by Buyer for examination and/or repair. Buyer shall be responsible for the cost of such transportation, and for risk of loss of or damage to the product during transportation. Within a reasonable time, Pierce shall repair or replace (at Pierce's option and expense) any nonconforming or defective parts. Repair or replacement shall be made only by a facility approved in advance in writing by Pierce. THIS REMEDY SHALL BE THE EXCLUSIVE AND SOLE REMEDY FOR ANY BREACH OF WARRANTY.

4. EXCLUSION OF CONSEQUENTIAL AND INCIDENTAL DAMAGES.

Notwithstanding anything to the contrary herein or in any agreement between Pierce and Buyer, IN NO EVENT SHALL PIERCE BE LIABLE FOR ANY CONSEQUENTIAL, INCIDENTAL, SPECIAL, INDIRECT, OR PUNITIVE DAMAGES WHATSOEVER, WHETHER ARISING OUT OF BREACH OF CONTRACT, WARRANTY, TORT (INCLUDING NEGLIGENCE AND STRICT LIABILITY) OR OTHER THEORY OF LAW OR EQUITY, WITH RESPECT TO VEHICLES OR OTHER PRODUCTS SOLD BY PIERCE, OR THEIR OPERATION OR FAILURE TO OPERATE, OR ANY DEFECTS THEREIN, OR ANY UNDERTAKINGS, ACTS OR OMISSIONS RELATED THERETO, REGARDLESS OF WHETHER PIERCE HAS BEEN INFORMED OF THE POSSIBILITY OF ANY SUCH DAMAGES. Without limiting the generality of the foregoing, Pierce specifically disclaims any liability for property or personal injury damages, penalties, damages for lost profits or revenues, loss of vehicles or products or any associated equipment, cost of substitute vehicles or products, down-time, delay damages, any other types of economic loss, or for any claims by any third party for any such damages.

Note: Any Surety Bond, if a part of the sale of the vehicle as to which this limited warranty is provided, applies only to this Pierce Basic One Year Limited Warranty for such vehicle, and not to other warranties made by Pierce in a separate document (if any) or to the warranties (if any) made by any manufacturer (other than Pierce) of any part, component, attachment or accessory that is incorporated into or attached to the vehicle.

Fire and Rescue Apparatus

Five (5) Year Material and Workmanship
Command Zone Electronics
Limited Warranty

1. LIMITED WARRANTY

Subject to the limitations and exclusions set forth below, Pierce Manufacturing provides the following warranty to the Buyer:

Coverage:	**Command Zone control modules shall be free from failures caused by defects in material and workmanship**
Warranty Begins:	**The date of the original purchase invoice (issued when the product ships from the factory).**
Warranty Period Ends After:	**Five (5) Years**
Conditions and Exclusions: **See Also Paragraphs 2 thru 4**	**This limited warranty applies to all of the control modules for the Command Zone system, including the full color graphic displays. Related wire harnesses, cables and connectors are not covered under this limited warranty and are instead covered under the Pierce One Year Basic Apparatus Limited Warranty.**

This limited warranty shall apply only if the product is properly maintained in accordance with Pierce's maintenance instructions and manuals and is used in service which is normal to the particular model. Normal service means service which does not subject the product to stresses or impacts greater than normally result from careful use. If the Buyer discovers a defect or nonconformity, it must notify Pierce in writing within thirty (30) days after the date of discovery, but in any event prior to the expiration of the warranty period. THIS LIMITED WARRANTY MAY NOT BE ASSIGNED OR OTHERWISE TRANSFERRED BY THE BUYER TO ANY SUBSEQUENT USER OR PURCHASER OR TO ANY OTHER PERSON OR ENTITY.

Notwithstanding anything to the contrary herein, Pierce makes no warranty whatsoever as to:

(a) any integral parts, components, attachments or trade accessories of or to the product that are not manufactured by Pierce, including but not limited to engines, transmissions, drivelines, axles, water pumps and generators; with respect to all such parts, components, attachments and accessories, Pierce shall assign to Buyer the applicable warranties, if any, made by the respective manufacturers thereof;

(b) any vehicle, chassis, or component, part, attachment or accessory damaged by misuse, neglect, fire, exposure to severe environmental or chemical conditions, acidic environment, improper maintenance, accident, crash, or force majeure such as natural disaster, lightning, earthquake, windstorm, hail, flood, war or riot;

(c) any vehicle, chassis or component, part, attachment or accessory that has been repaired, altered or assembled in any way by any person or entity other than Pierce which, in the sole judgment of Pierce, adversely affects the performance, stability or purpose for which it was manufactured; or

(d) products or parts which may in the ordinary course wear out and have to be replaced during the warranty period, including, but not limited to, tires, fluids, gaskets and light bulbs. Pierce assumes no responsibility for the assembly of its parts or subassemblies into finishing products or vehicles unless the assembly is performed by Pierce.

The original purchaser may void this warranty in part or in its entirety if the product is repaired or replaced (a) without prior written approval of the Pierce Customer Service Department; or (b) at a facility which has not been approved by Pierce as to technical capability. Any repairs, modifications, alterations or aftermarket parts added after manufacture without the authorization of Pierce may void this warranty.

2. DISCLAIMERS OF WARRANTIES

THE WARRANTY SET FORTH IN PARAGRAPH 1 IS THE SOLE AND EXCLUSIVE WARRANTY GIVEN BY PIERCE. PIERCE HEREBY DISCLAIMS AND EXCLUDES ALL OTHER WARRANTIES, WHETHER EXPRESS, IMPLIED OR STATUTORY, INCLUDING WITHOUT LIMITATION ANY WARRANTY OF MERCHANTABILITY, ANY WARRANTY OF FITNESS FOR A PARTICULAR PURPOSE, AND ANY WARRANTIES ARISING FROM COURSE OF DEALING OR USAGE OF TRADE.

3. BUYER'S EXCLUSIVE REMEDY.

If the product fails to conform to the warranty set forth in paragraph 1 during the warranty period, and such nonconformity is not due to misuse, neglect, accident or improper maintenance, Buyer must notify Pierce within the time period specified in paragraph 1, and shall make the product available for inspection by Pierce or its designated agent. At the request of Pierce, any allegedly defective product shall be returned to Pierce by Buyer for examination and/or repair. Buyer shall be responsible for the cost of such transportation, and for risk of loss of or damage to the product during transportation. Within a reasonable time, Pierce shall repair or replace (at Pierce's option and expense) any nonconforming or defective parts. Repair or replacement shall be made only by a facility approved in advance in writing by Pierce. THIS REMEDY SHALL BE THE EXCLUSIVE AND SOLE REMEDY FOR ANY BREACH OF WARRANTY.

4. EXCLUSION OF CONSEQUENTIAL AND INCIDENTAL DAMAGES.

Notwithstanding anything to the contrary herein or in any agreement between Pierce and Buyer, IN NO EVENT SHALL PIERCE BE LIABLE FOR ANY CONSEQUENTIAL, INCIDENTAL, SPECIAL, INDIRECT, OR PUNITIVE DAMAGES WHATSOEVER, WHETHER ARISING OUT OF BREACH OF CONTRACT, WARRANTY, TORT (INCLUDING NEGLIGENCE AND STRICT LIABILITY) OR OTHER THEORY OF LAW OR EQUITY, WITH RESPECT TO VEHICLES OR OTHER PRODUCTS SOLD BY PIERCE, OR THEIR OPERATION OR FAILURE TO OPERATE, OR ANY DEFECTS THEREIN, OR ANY UNDERTAKINGS, ACTS OR OMISSIONS RELATED THERETO, REGARDLESS OF WHETHER PIERCE HAS BEEN INFORMED OF THE POSSIBILITY OF ANY SUCH DAMAGES. Without limiting the generality of the foregoing, Pierce specifically disclaims any liability for property or personal injury damages, penalties, damages for lost profits or revenues, loss of vehicles or products or any associated equipment, cost of substitute vehicles or products, down-time, delay damages, any other types of economic loss, or for any claims by any third party for any such damages.

Note: Any Surety Bond, if a part of the sale of the vehicle as to which this limited warranty is provided, applies only to this Pierce Basic One Year Limited Warranty for such vehicle, and not to other warranties made by Pierce in a separate document (if any) or to the warranties (if any) made by any manufacturer (other than Pierce) of any part, component, attachment or accessory that is incorporated into or attached to the vehicle.

Fire and Rescue Apparatus

54 Months Material and Workmanship

Camera System

Limited Warranty

1. LIMITED WARRANTY

Subject to the limitations and exclusions set forth below, Pierce Manufacturing provides the following warranty to the Buyer:

Coverage:	**This limited warranty covers repairs to correct any defect related to materials or workmanship of the Sharpvision camera system installed on the apparatus occuring during the warranty period.**
Warranty Begins:	**The date of delivery.**
Warranty Period Ends After:	**Fifty - Four (54) months**
Conditions and Exclusions: **See Also Paragraphs 2 thru 4**	**This limited warranty does not apply to related wire harnesses, cables, and connectors, which are covered by the Pierce one (1) year basic apparatus limited warranty.**

This limited warranty shall apply only if the product is properly maintained in accordance with Pierce's maintenance instructions and manuals and is used in service which is normal to the particular model. Normal service means service which does not subject the product to stresses or impacts greater than normally result from careful use. If the Buyer discovers a defect or nonconformity, it must notify Pierce in writing within thirty (30) days after the date of discovery, but in any event prior to the expiration of the warranty period. THIS LIMITED WARRANTY MAY NOT BE ASSIGNED OR OTHERWISE TRANSFERRED BY THE BUYER TO ANY SUBSEQUENT USER OR PURCHASER OR TO ANY OTHER PERSON OR ENTITY.

Notwithstanding anything to the contrary herein, Pierce makes no warranty whatsoever as to:

(a) any integral parts, components, attachments or trade accessories of or to the product that are not manufactured by Pierce, including but not limited to engines, transmissions, drivelines, axles, water pumps and generators; with respect to all such parts, components, attachments and accessories, Pierce shall assign to Buyer the applicable warranties, if any, made by the respective manufacturers thereof;

(b) any vehicle, chassis, or component, part, attachment or accessory damaged by misuse, neglect, fire, exposure to severe environmental or chemical conditions, acidic environment, improper maintenance, accident, crash, or force majeure such as natural disaster, lightning, earthquake, windstorm, hail, flood, war or riot;

(c) any vehicle, chassis or component, part, attachment or accessory that has been repaired, altered or assembled in any way by any person or entity other than Pierce which, in the sole judgment of Pierce, adversely affects the performance, stability or purpose for which it was manufactured; or

(d) products or parts which may in the ordinary course wear out and have to be replaced during the warranty period, including, but not limited to, tires, fluids, gaskets and light bulbs. Pierce assumes no responsibility for the assembly of its parts or subassemblies into finishing products or vehicles unless the assembly is performed by Pierce.

The original purchaser may void this warranty in part or in its entirety if the product is repaired or replaced (a) without prior written approval of the Pierce Customer Service Department; or (b) at a facility which has not been approved by Pierce as to technical capability. Any repairs, modifications, alterations or aftermarket parts added after manufacture without the authorization of Pierce may void this warranty.

2. DISCLAIMERS OF WARRANTIES

THE WARRANTY SET FORTH IN PARAGRAPH 1 IS THE SOLE AND EXCLUSIVE WARRANTY GIVEN BY PIERCE. PIERCE HEREBY DISCLAIMS AND EXCLUDES ALL OTHER WARRANTIES, WHETHER EXPRESS, IMPLIED OR STATUTORY, INCLUDING WITHOUT LIMITATION ANY WARRANTY OF MERCHANTABILITY, ANY WARRANTY OF FITNESS FOR A PARTICULAR PURPOSE, AND ANY WARRANTIES ARISING FROM COURSE OF DEALING OR USAGE OF TRADE.

3. BUYER'S EXCLUSIVE REMEDY.

If the product fails to conform to the warranty set forth in paragraph 1 during the warranty period, and such nonconformity is not due to misuse, neglect, accident or improper maintenance, Buyer must notify Pierce within the time period specified in paragraph 1, and shall make the product available for inspection by Pierce or its designated agent. At the request of Pierce, any allegedly defective product shall be returned to Pierce by Buyer for examination and/or repair. Buyer shall be responsible for the cost of such transportation, and for risk of loss of or damage to the product during transportation. Within a reasonable time, Pierce shall repair or replace (at Pierce's option and expense) any nonconforming or defective parts. Repair or replacement shall be made only by a facility approved in advance in writing by Pierce. THIS REMEDY SHALL BE THE EXCLUSIVE AND SOLE REMEDY FOR ANY BREACH OF WARRANTY.

4. EXCLUSION OF CONSEQUENTIAL AND INCIDENTAL DAMAGES.

Notwithstanding anything to the contrary herein or in any agreement between Pierce and Buyer, IN NO EVENT SHALL PIERCE BE LIABLE FOR ANY CONSEQUENTIAL, INCIDENTAL, SPECIAL, INDIRECT, OR PUNITIVE DAMAGES WHATSOEVER, WHETHER ARISING OUT OF BREACH OF CONTRACT, WARRANTY, TORT (INCLUDING NEGLIGENCE AND STRICT LIABILITY) OR OTHER THEORY OF LAW OR EQUITY, WITH RESPECT TO VEHICLES OR OTHER PRODUCTS SOLD BY PIERCE, OR THEIR OPERATION OR FAILURE TO OPERATE, OR ANY DEFECTS THEREIN, OR ANY UNDERTAKINGS, ACTS OR OMISSIONS RELATED THERETO, REGARDLESS OF WHETHER PIERCE HAS BEEN INFORMED OF THE POSSIBILITY OF ANY SUCH DAMAGES. Without limiting the generality of the foregoing, Pierce specifically disclaims any liability for property or personal injury damages, penalties, damages for lost profits or revenues, loss of vehicles or products or any associated equipment, cost of substitute vehicles or products, down-time, delay damages, any other types of economic loss, or for any claims by any third party for any such damages.

Note: Any Surety Bond, if a part of the sale of the vehicle as to which this limited warranty is provided, applies only to this Pierce Basic One Year Limited Warranty for such vehicle, and not to other warranties made by Pierce in a separate document (if any) or to the warranties (if any) made by any manufacturer (other than Pierce) of any part, component, attachment or accessory that is incorporated into or attached to the vehicle.

Fire and Rescue Apparatus

Ten (10) Year Material and Workmanship
Pierce 12V LED Strip Light

Limited Warranty

1. LIMITED WARRANTY

Subject to the limitations and exclusions set forth below, Pierce Manufacturing provides the following warranty to the Buyer:

Coverage:	**This limited warranty covers repairs to correct any defect related to materials or workmanship of the Pierce 12V LED strip lights installed on the apparatus occuring during the warranty period.**
Warranty Begins:	**The date of the original purchase invoice (issued when the product ships from the factory).**
Warranty Period Ends After:	**Ten (10) Year**
Conditions and Exclusions: **See Also Paragraphs 2 thru 4**	**This limited warranty does not apply to related wire harnesses, cables, and connectors, which are covered by the Pierce one (1) year basic apparatus limited warranty.**

This limited warranty shall apply only if the product is properly maintained in accordance with Pierce's maintenance instructions and manuals and is used in service which is normal to the particular model. Normal service means service which does not subject the product to stresses or impacts greater than normally result from careful use. If the Buyer discovers a defect or nonconformity, it must notify Pierce in writing within thirty (30) days after the date of discovery, but in any event prior to the expiration of the warranty period. THIS LIMITED WARRANTY MAY NOT BE ASSIGNED OR OTHERWISE TRANSFERRED BY THE BUYER TO ANY SUBSEQUENT USER OR PURCHASER OR TO ANY OTHER PERSON OR ENTITY.

Notwithstanding anything to the contrary herein, Pierce makes no warranty whatsoever as to:

(a) any integral parts, components, attachments or trade accessories of or to the product that are not manufactured by Pierce, including but not limited to engines, transmissions, drivelines, axles, water pumps and generators; with respect to all such parts, components, attachments and accessories, Pierce shall assign to Buyer the applicable warranties, if any, made by the respective manufacturers thereof;

(b) any vehicle, chassis, or component, part, attachment or accessory damaged by misuse, neglect, fire, exposure to severe environmental or chemical conditions, acidic environment, improper maintenance, accident, crash, or force majeure such as natural disaster, lightning, earthquake, windstorm, hail, flood, war or riot;

(c) any vehicle, chassis or component, part, attachment or accessory that has been repaired, altered or assembled in any way by any person or entity other than Pierce which, in the sole judgment of Pierce, adversely affects the performance, stability or purpose for which it was manufactured; or

(d) products or parts which may in the ordinary course wear out and have to be replaced during the warranty period, including, but not limited to, tires, fluids, gaskets and light bulbs. Pierce assumes no responsibility for the assembly of its parts or subassemblies into finishing products or vehicles unless the assembly is performed by Pierce.

The original purchaser may void this warranty in part or in its entirety if the product is repaired or replaced (a) without prior written approval of the Pierce Customer Service Department; or (b) at a facility which has not been approved by Pierce as to technical capability. Any repairs, modifications, alterations or aftermarket parts added after manufacture without the authorization of Pierce may void this warranty.

2. DISCLAIMERS OF WARRANTIES

THE WARRANTY SET FORTH IN PARAGRAPH 1 IS THE SOLE AND EXCLUSIVE WARRANTY GIVEN BY PIERCE. PIERCE HEREBY DISCLAIMS AND EXCLUDES ALL OTHER WARRANTIES, WHETHER EXPRESS, IMPLIED OR STATUTORY, INCLUDING WITHOUT LIMITATION ANY WARRANTY OF MERCHANTABILITY, ANY WARRANTY OF FITNESS FOR A PARTICULAR PURPOSE, AND ANY WARRANTIES ARISING FROM COURSE OF DEALING OR USAGE OF TRADE.

3. BUYER'S EXCLUSIVE REMEDY.

If the product fails to conform to the warranty set forth in paragraph 1 during the warranty period, and such nonconformity is not due to misuse, neglect, accident or improper maintenance, Buyer must notify Pierce within the time period specified in paragraph 1, and shall make the product available for inspection by Pierce or its designated agent. At the request of Pierce, any allegedly defective product shall be returned to Pierce by Buyer for examination and/or repair. Buyer shall be responsible for the cost of such transportation, and for risk of loss of or damage to the product during transportation. Within a reasonable time, Pierce shall repair or replace (at Pierce's option and expense) any nonconforming or defective parts. Repair or replacement shall be made only by a facility approved in advance in writing by Pierce. THIS REMEDY SHALL BE THE EXCLUSIVE AND SOLE REMEDY FOR ANY BREACH OF WARRANTY.

4. EXCLUSION OF CONSEQUENTIAL AND INCIDENTAL DAMAGES.

Notwithstanding anything to the contrary herein or in any agreement between Pierce and Buyer, IN NO EVENT SHALL PIERCE BE LIABLE FOR ANY CONSEQUENTIAL, INCIDENTAL, SPECIAL, INDIRECT, OR PUNITIVE DAMAGES WHATSOEVER, WHETHER ARISING OUT OF BREACH OF CONTRACT, WARRANTY, TORT (INCLUDING NEGLIGENCE AND STRICT LIABILITY) OR OTHER THEORY OF LAW OR EQUITY, WITH RESPECT TO VEHICLES OR OTHER PRODUCTS SOLD BY PIERCE, OR THEIR OPERATION OR FAILURE TO OPERATE, OR ANY DEFECTS THEREIN, OR ANY UNDERTAKINGS, ACTS OR OMISSIONS RELATED THERETO, REGARDLESS OF WHETHER PIERCE HAS BEEN INFORMED OF THE POSSIBILITY OF ANY SUCH DAMAGES. Without limiting the generality of the foregoing, Pierce specifically disclaims any liability for property or personal injury damages, penalties, damages for lost profits or revenues, loss of vehicles or products or any associated equipment, cost of substitute vehicles or products, down-time, delay damages, any other types of economic loss, or for any claims by any third party for any such damages.

Note: Any Surety Bond, if a part of the sale of the vehicle as to which this limited warranty is provided, applies only to this Pierce Basic One Year Limited Warranty for such vehicle, and not to other warranties made by Pierce in a separate document (if any) or to the warranties (if any) made by any manufacturer (other than Pierce) of any part, component, attachment or accessory that is incorporated into or attached to the vehicle.

NEW PRODUCT WARRANTY

PARTICIPATING OEM SALES
DISTRIBUTOR SALES

LIMITED WARRANTY ON NEW ALLISON AUTOMATIC TRANSMISSIONS USED IN EMERGENCY VEHICLE APPLICATIONS

Allison Transmission will provide for repairs or replacement, at its option, during the warranty period of each new Allison transmission listed below that is installed in an Emergency Vehicle in accordance with the following terms, conditions, and limitations.

WHAT IS COVERED

- **WARRANTY APPLIES —** This warranty is for new Allison transmission models listed below installed in an Emergency Vehicle and is provided to the original and any subsequent owner(s) of the vehicle during the warranty period.
- **REPAIRS COVERED —** The warranty covers repairs or replacement, at Allison Transmission's option, to correct any transmission malfunction resulting from defects in material or workmanship occurring during the warranty period. Needed repairs or replacements will be performed using the method Allison Transmission determines most appropriate under the circumstances.
- **TOWING —** Towing is covered to the nearest Allison Transmission Distributor or authorized Dealer only when necessary to prevent further damage to your transmission.
- **PAYMENT TERMS —** Warranty repairs, including parts and labor, will be covered per the schedule shown in the chart contained in section "APPLICABLE MODELS, WARRANTY LIMITATIONS, AND ADJUSTMENT SCHEDULE."
- **OBTAINING REPAIRS —** To obtain warranty repairs, take the vehicle to any Allison Transmission Distributor or authorized Dealer within a reasonable amount of time and request the needed repairs. A reasonable amount of time must be allowed for the Distributor or Dealer to perform necessary repairs.
- **TRANSMISSION REMOVAL AND REINSTALLATION —** Labor costs for the removal and re-installation of the transmission, when necessary to make a warranty repair, are covered by this warranty.
- **WARRANTY PERIOD —** The warranty period for all coverages shall begin on the date the transmission is delivered to the first retail purchaser, with the following exception:

  Demonstration Service - A transmission in a new truck or bus may be demonstrated to a total of 5000 miles (8000 kilometers). If the vehicle is within this limit when sold to a retail purchaser, the warranty start date is the date of purchase. Normal warranty services are applicable to the demonstrating Dealer. Should the truck or bus be sold to a retail purchaser after these limits are reached, the warranty period will begin on the date the vehicle was first placed in demonstration service and the purchaser will be entitled to the remaining warranty.

APPLICABLE MODELS, WARRANTY LIMITATIONS, AND ADJUSTMENT SCHEDULE

APPLICABLE MODELS	WARRANTY LIMITATIONS (Whichever occurs first)		ADJUSTMENT CHARGE TO BE PAID BY THE CUSTOMER	
	Months	Transmission Miles Or Kilometers	Parts	Labor
MT, MD 3000, 3200, 3500, 3700	0–24	No Limit	No Charge	No Charge
HT with Hydraulic Controls	0–24	No Limit	No Charge	No Charge
AT, 1000 Series™, 2000 Series™, 2400 Series™	0–36	No Limit	No Charge	No Charge
HT with Electronic Controls	0–60	No Limit	No Charge	No Charge
HD 1000 EVS, 2100 EVS, 2200 EVS 2350 EVS, 2500 EVS, 2550 EVS, 3000 EVS, 3500 EVS, 4000, 4000 EVS, 4500, 4500 EVS, 4700, 4700 EVS, 4800, 4800 EVS	0–60	No Limit	No Charge	No Charge

WHAT IS NOT COVERED

- **DAMAGE DUE TO ACCIDENT, MISUSE, or ALTERATION —** Defects and damage caused as the result of any of the following are not covered:
  - — Flood, collision, fire, theft, freezing, vandalism, riot, explosion, or objects striking the vehicle;
  - — Misuse of the vehicle;
  - — Installation into unapproved applications and installations;
  - — Alterations or modification of the transmission or the vehicle, and
  - — Damage resulting from improper storage (refer to long-term storage procedure outlined in the applicable Allison Service Manual)
  - — Anything other than defects in Allison Transmission material or workmanship

  NOTE: This warranty is void on transmissions used in vehicles currently or previously titled as salvaged, scrapped, junked, or totaled.
- **CHASSIS, BODY, and COMPONENTS —** The chassis and body company (assemblers) and other component and equipment manufacturers are solely responsible for warranties on the chassis, body, component(s), and equipment they provide. Any transmission repair caused by an alteration(s) made to the Allison transmission or the vehicle which allows the transmission to be installed or operated outside of the limits defined in the appropriate Allison Installation Guideline is solely the responsibility of the entity making the alteration(s).
- **DAMAGE CAUSED by LACK of MAINTENANCE or by the USE of TRANSMISSION FLUIDS NOT RECOMMENDED in the OPERATOR'S MANUAL —** Defects and damage caused by any of the following are not covered:
  - — Failure to follow the recommendations of the maintenance schedule intervals applicable to the transmission;
  - — Failure to use transmission fluids or maintain transmission fluid levels recommended in the Operator's Manual.
- **MAINTENANCE —** Normal maintenance (such as replacement of filters, screens, and transmission fluid) is not covered and is the owner's responsibility.
- **REPAIRS by UNAUTHORIZED DEALERS —** Defects and damage caused by a service outlet that is not an authorized Allison Transmission Distributor or Dealer are not covered.
- **USE of OTHER THAN GENUINE ALLISON TRANSMISSION PARTS —** Defects and damage caused by the use of parts that are not genuine Allison Transmission parts are not covered.
- **EXTRA EXPENSES —** Economic loss and extra expenses are not covered. Examples include but are not limited to: loss of vehicle use; inconvenience; storage; payment for loss of time or pay; vehicle rental expense; lodging; meals; or other travel costs.
- **"DENIED PARTY" OWNERSHIP —** Warranty repair parts and labor costs are not reimbursed to any participating or non-participating OEMs, dealers or distributors who perform warranty work for, or on behalf of, end users identified by the United States as being a "denied party" or who are citizens of sanctioned or embargoed countries as defined by the U.S. Department of Treasury Office of Foreign Assets Control. Furthermore, warranty reimbursements are not guaranteed if the reimbursement would be contrary to any United States export control laws or regulations as defined by the U.S. Department of Commerce, the U.S. Department of State, or the U.S. Department of Treasury.

OTHER TERMS APPLICABLE TO CONSUMERS AS DEFINED by the MAGNUSON-MOSS WARRANTY ACT

This warranty gives you specific legal rights and you may also have other rights which vary from state to state.

Allison Transmission does not authorize any person to create for it any other obligation or liability in connection with these transmissions. **ANY IMPLIED WARRANTY OF MERCHANTABILITY OR FITNESS FOR A PARTICULAR PURPOSE APPLICABLE TO THESE TRANSMISSIONS IS LIMITED IN DURATION TO THE DURATION OF THIS WRITTEN WARRANTY. PERFORMANCE OF REPAIRS AND NEEDED ADJUSTMENTS IS THE EXCLUSIVE REMEDY UNDER THIS WRITTEN WARRANTY OR ANY IMPLIED WARRANTY. ALLISON TRANSMISSION SHALL NOT BE LIABLE FOR INCIDENTAL OR CONSEQUENTIAL DAMAGES (SUCH AS, BUT NOT LIMITED TO, LOST WAGES OR VEHICLE RENTAL EXPENSES) RESULTING FROM BREACH OF THIS WRITTEN WARRANTY OR ANY IMPLIED WARRANTY.****

** Some states do not allow limitations on how long an implied warranty will last or the exclusion or limitation of incidental or consequential damages, so the above limitations or exclusions may not apply to you.

OTHER TERMS APPLICABLE TO OTHER END-USERS

THIS WARRANTY IS THE ONLY WARRANTY APPLICABLE TO THE ALLISON TRANSMISSION MODELS LISTED ABOVE AND IS EXPRESSLY IN LIEU OF ANY OTHER WARRANTIES, EXPRESS OR IMPLIED, INCLUDING ANY IMPLIED WARRANTY OF MERCHANTABILITY OR FITNESS FOR A PARTICULAR PURPOSE. ALLISON TRANSMISSION DOES NOT AUTHORIZE ANY PERSON TO CREATE FOR IT ANY OTHER OBLIGATION OR LIABILITY IN CONNECTION WITH SUCH TRANSMISSIONS. ALLISON TRANSMISSION SHALL NOT BE LIABLE FOR INCIDENTAL OR CONSEQUENTIAL DAMAGES RESULTING FROM BREACH OF THIS WARRANTY OR ANY IMPLIED WARRANTY.

QUESTIONS

If you have any questions regarding this warranty or the performance of warranty obligations, you may contact any Allison Transmission Distributor or Dealer or write to:

Allison Transmission, Inc.
P.O. Box 894
Indianapolis, IN 46206-0894
Attention: Warranty Administration PF-9

Form SE0616EN (201009)

Fire and Rescue Apparatus

Five (5) Year Material and Workmanship - Transmission Oil Cooler
Three (3) Year Collateral Damage Coverage

Limited Warranty

1. LIMITED WARRANTY

Subject to the limitations and exclusions set forth below, Pierce Manufacturing provides the following warranty to the Buyer:

Coverage:	**The transmission cooler shall be free from component or structural failures caused by defects in material and/or workmanship. Collateral damage up to $10,000 per occurrence is available for the first three (3) years.**
Warranty Begins:	**The date of delivery to the first retail purchaser.**
Warranty Period Ends After:	**Five (5) Years on Oil Cooler and three (3) years on collateral damage coverage**
Conditions and Exclusions: **See Also Paragraphs 2 thru 4**	**This warranty does not cover repair due to accidents, misuse, and excessive vibration, flying debris, storage damage (freezing), negligence or modification. This warranty is void if any modification or repairs are performed without authorization. This also voids any future warranty.** **This warranty does not cover cost of maintenance or repairs due to lack of required maintenance services as recommended. Performance of the required maintenance and use of proper fluids are the responsibility of the owner.** **Towing is covered to the nearest distributor or authorized dealer only when necessary to prevent further damage to your transmission.** **Labor costs for the removal and reinstallation of goods may be covered when necessary to make repairs. Please contact your OEM for authorization.** **Replacement of cooler during the warranty period is limited to 100% of reasonable labor costs up to a maximum of $700 to remove, replace, or repair the oil cooler.**

This limited warranty shall apply only if the product is properly maintained in accordance with Pierce's maintenance instructions and manuals and is used in service which is normal to the particular model. Normal service means service which does not subject the product to stresses or impacts greater than normally result from careful use. If the Buyer discovers a defect or nonconformity, it must notify Pierce in writing within thirty (30) days after the date of discovery, but in any event prior to the expiration of the warranty period. THIS LIMITED WARRANTY MAY NOT BE ASSIGNED OR OTHERWISE TRANSFERRED BY THE BUYER TO ANY SUBSEQUENT USER OR PURCHASER OR TO ANY OTHER PERSON OR ENTITY.

Notwithstanding anything to the contrary herein, Pierce makes no warranty whatsoever as to:

(a) any integral parts, components, attachments or trade accessories of or to the product that are not manufactured by Pierce, including but not limited to engines, transmissions, drivelines, axles, water pumps and generators; with respect to all such parts, components, attachments and accessories, Pierce shall assign to Buyer the applicable warranties, if any, made by the respective manufacturers thereof;

(b) any vehicle, chassis, or component, part, attachment or accessory damaged by misuse, neglect, fire, exposure to severe environmental or chemical conditions, acidic environment, improper maintenance, accident, crash, or force majeure such as natural disaster, lightning, earthquake, windstorm, hail, flood, war or riot;

(c) any vehicle, chassis or component, part, attachment or accessory that has been repaired, altered or assembled in any way by any person or entity other than Pierce which, in the sole judgment of Pierce, adversely affects the performance, stability or purpose for which it was manufactured; or

(d) products or parts which may in the ordinary course wear out and have to be replaced during the warranty period, including, but not limited to, tires, fluids, gaskets and light bulbs. Pierce assumes no responsibility for the assembly of its parts or subassemblies into finishing products or vehicles unless the assembly is performed by Pierce.

The original purchaser may void this warranty in part or in its entirety if the product is repaired or replaced (a) without prior written approval of the Pierce Customer Service Department; or (b) at a facility which has not been approved by Pierce as to technical capability. Any repairs, modifications, alterations or aftermarket parts added after manufacture without the authorization of Pierce may void this warranty.

2. DISCLAIMERS OF WARRANTIES

THE WARRANTY SET FORTH IN PARAGRAPH 1 IS THE SOLE AND EXCLUSIVE WARRANTY GIVEN BY PIERCE. PIERCE HEREBY DISCLAIMS AND EXCLUDES ALL OTHER WARRANTIES, WHETHER EXPRESS, IMPLIED OR STATUTORY, INCLUDING WITHOUT LIMITATION ANY WARRANTY OF MERCHANTABILITY, ANY WARRANTY OF FITNESS FOR A PARTICULAR PURPOSE, AND ANY WARRANTIES ARISING FROM COURSE OF DEALING OR USAGE OF TRADE.

3. BUYER'S EXCLUSIVE REMEDY.

If the product fails to conform to the warranty set forth in paragraph 1 during the warranty period, and such nonconformity is not due to misuse, neglect, accident or improper maintenance, Buyer must notify Pierce within the time period specified in paragraph 1, and shall make the product available for inspection by Pierce or its designated agent. At the request of Pierce, any allegedly defective product shall be returned to Pierce by Buyer for examination and/or repair. Buyer shall be responsible for the cost of such transportation, and for risk of loss of or damage to the product during transportation. Within a reasonable time, Pierce shall repair or replace (at Pierce's option and expense) any nonconforming or defective parts. Repair or replacement shall be made only by a facility approved in advance in writing by Pierce. THIS REMEDY SHALL BE THE EXCLUSIVE AND SOLE REMEDY FOR ANY BREACH OF WARRANTY.

4. EXCLUSION OF CONSEQUENTIAL AND INCIDENTAL DAMAGES.

Notwithstanding anything to the contrary herein or in any agreement between Pierce and Buyer, IN NO EVENT SHALL PIERCE BE LIABLE FOR ANY CONSEQUENTIAL, INCIDENTAL, SPECIAL, INDIRECT, OR PUNITIVE DAMAGES WHATSOEVER, WHETHER ARISING OUT OF BREACH OF CONTRACT, WARRANTY, TORT (INCLUDING NEGLIGENCE AND STRICT LIABILITY) OR OTHER THEORY OF LAW OR EQUITY, WITH RESPECT TO VEHICLES OR OTHER PRODUCTS SOLD BY PIERCE, OR THEIR OPERATION OR FAILURE TO OPERATE, OR ANY DEFECTS THEREIN, OR ANY UNDERTAKINGS, ACTS OR OMISSIONS RELATED THERETO, REGARDLESS OF WHETHER PIERCE HAS BEEN INFORMED OF THE POSSIBILITY OF ANY SUCH DAMAGES. Without limiting the generality of the foregoing, Pierce specifically disclaims any liability for property or personal injury damages, penalties, damages for lost profits or revenues, loss of vehicles or products or any associated equipment, cost of substitute vehicles or products, down-time, delay damages, any other types of economic loss, or for any claims by any third party for any such damages.

Note: Any Surety Bond, if a part of the sale of the vehicle as to which this limited warranty is provided, applies only to this Pierce Basic One Year Limited Warranty for such vehicle, and not to other warranties made by Pierce in a separate document (if any) or to the warranties (if any) made by any manufacturer (other than Pierce) of any part, component, attachment or accessory that is incorporated into or attached to the vehicle.

Effective 1 August, 2009

UNITED PLASTIC FABRICATING, INC.

WARRANTY

FOR: POLY-TANK®, POLYSIDE®, INTEGRATOR™, ELLIPSE™, ELLIP-T-TANK™ & DEFENDER™

LIFETIME SERVICE WARRANTY

United Plastic Fabricating, Inc. (hereinafter called "UPF") warrants each POLY-TANK®, Booster/Foam Tank POLYSIDE® Wetside Tank, Integrator Tank/Body, ELLIPSE™ Elliptical Tank, Ellip-T-Tank Tank and DEFENDER™ Skid Tank to be free from defects in material and workmanship for the service life of the original vehicle (vehicle must be actively used in an emergency response for fire suppression). All UPF Tanks must be installed and operated in accordance with the UPF Installation and Operating Guidelines. Failure to do so can void the warranty.

Every UPF Tank is inspected and tested before leaving our facility. Should your UPF Tank require service, please notify UPF via email, fax, in writing or by calling UPF at 1-978-975-4520. Please provide the serial number, a description of the service request, the location along with the phone number and name of the contact person. Our goal is to have scheduled work completed within a reasonable time period.

Under a valid warranty claim, UPF will cover the cost to repair the UPF Tank including the customary and reasonable costs to make the tank accessible such as the removal and reinstallation of the tank if authorized in advance (pre-approved) by UPF. The warranty will not cover tanks that have been improperly installed, operated, misused, abused, or modified from its intended or designed use. Serial number must not have been altered, defaced or removed. Tanks that are not stored or installed properly which results in the tank suffering UV damage will not be covered by this agreement.

Should UPF determine that the service claim is valid under this warranty for a tank located outside of the United States and Canada, UPF will assume the costs for labor and material for the warranty repair as described above plus all travel costs to the U.S. port of embarkation. Costs for airline travel outside of the U.S. and Canada will not be the responsibility of UPF.

In the event the tank shall become stationed in an area of the world that is considered to be a war zone or where unsafe conditions exist for the safe passage of United States Nationals, as reported by the United States Department of State, (http://www.state.gov), and a request to perform service or warranty repairs, UPF reserves the right to refuse to honor such requests. It is the purchaser's responsibility to relocate the tank to an area where such repairs can be performed without undue risk to UPF employees or their designee. UPF will make every reasonable effort to support our products though alternative means.

For Ellipse™ elliptical tanks, a separate five year warranty provided by the subcontractor is applied to the sub-frames, chute linings (rubber isolation strips) and metal components. The stainless steel wrap provided by UPF shall be warranted by the subcontractor performing the wrap installation in accordance with their warranty in place at the time of the installation. UPF will not be liable for any warranty costs associated with the wrap, sub-frames, chute linings (rubber isolation strips) and metal components but will assist with all claims on behalf of its customer.

For PolySide® wetsided tanks and Integrator™ Tank/Body units, all polypropylene components related to the tank shall carry the standard UPF lifetime

Continued on back

UNITED PLASTIC FABRICATING, INC.

WARRANTY

FOR: POLY-TANK®, POLYSIDE®, INTEGRATOR™, ELLIPSE™, ELLIP-T-TANK™ & DEFENDER™

service warranty. Other polypropylene components, including but not limited to compartments, wheel wells, fenders and other body related components shall be warranted by UPF for a period of ten years. The warranty for the PolySide® and Integrator™ units excludes paint or hardware, which shall be covered by the manufacturer of the paint/hardware.

All UPF tanks 50 gallons or less utilized for non-fire applications and installed on specialty vehicles such as ATVs, trailers, boats, etc. are covered under a separate warranty policy available from UPF. Further, UPF Protector™ foam and water trailers are warranted under a separate warranty policy available from UPF.

This UPF warranty is transferable within the United States only with prior written approval by UPF (except an original apparatus manufacturer may assign this warranty to the first titled owner/lessee of the apparatus).

UPF will NOT reimburse any unnecessary work and/or work that has not been pre-approved. Any and all third party charges must be pre-authorized and approved in writing by UPF prior to commencing the work. Any unauthorized third party repairs, alterations, actions or modifications will not be covered and can void the warranty. UPF will be the sole determining authority as to whether a service claim will be valid and covered under this warranty.

In no event will UPF be liable for an amount in excess of the purchase price of the booster/foam tank at the time of manufacture or for any loss or damage, whether direct, indirect, incidental, consequential, or otherwise arising out of failure of its product. Loss of contents (water, foam, etc.) shall not be the responsibility of UPF. Further, UPF is not responsible for costs associated with service repairs to chassis, sub-frames, bodies, valves, dumps, hoses, pressure vacuum vents, and other components (i.e. liquid level transducers, etc.). Further, UPF will not cover the cost for travel of the vehicle to and from a repair facility.

This warranty contains the entire warranty. It is the sole warranty and price agreements or representation, whether oral or written, are either merged herein or expressly cancelled. UPF neither assumes, nor authorizes any person supposing to act on its behalf to change, nor assume for it, any warranty or liability concerning its product.

This warranty gives you specific legal rights, and you may also have other rights which vary from state to state. Some states do not allow exclusion or limitation or incidental or consequential damage, so the above limitation or exclusion may not apply to you. Since some states do not allow limitations on the length of an implied warranty, the above limitation may not apply to you.

THERE ARE NO WARRANTIES, EXPRESSED OR IMPLIED, WHICH EXTEND BEYOND THE DESCRIPTION OF THE FACE HEREOF. THERE IS NO EXPRESS OR IMPLIED WARRANTY OF MERCHANTABILITY OR A WARRANTY OF FITNESS FOR A PARTICULAR PURPOSE. ADDITIONALLY, THIS WARRANTY IS IN LIEU OF ALL OTHER OBLIGATION OR LIABILITIES ON THE PART OF UPF.

POLY-TANK®,& POLYSIDE® are registered trademarks of UPF, Inc. INTEGRATOR™, ELLIPSE™, ELLIP-T-TANK™ & DEFENDER™ are trademarks of UPF, Inc. © 08/01/09 UPF, Inc. Printed in the USA

PIERCE MANUFACTURING INC.

BULLETIN

TO: **All Dealer Service Representatives**

From: **Kevin Hanegraaf**

DATE: **January 4, 2010**

RE: **UPF Tank Warranty Policy – Truck in Accident**

Service Topic #292

To keep the UPF tank warranty valid on trucks that have been involved in a vehicular accident, it is UPF's policy that the customer must remove the tank from the truck and send it back to one of UPF's facilities for inspection. In the event that this does not take place, the warranty will be considered null and void.

The customer must remove and send the tank back to UPF for inspection in order to maintain the original warranty coverage, at which time it will be:

- *Filled with water*
- *Visually inspected*
- *Ultraviolet spark tested on articulating test stand in the dark*
- *Recommendation for repairs if necessary provided by UPF*
- *Fully evaluated and repaired by UPF*

If your customer chooses to leave the tank on the truck and wants a technician to inspect and/or repair the tank in the field, then **the warranty is no longer in effect**. This direction is upheld by UPF because the technician cannot inspect the entire tank when it is still installed on the truck.

Note: This memo is intended to relay the information Pierce has received on UPF's tank warranty for trucks that are in a vehicular accident. In the event of an actual claim, we direct you to consult with UPF's service Manager Maura Watts (800-638-8265 x253)

Fire and Rescue Apparatus

Ten (10) Year Structural Integrity
Apparatus Body
Limited Warranty

1. LIMITED WARRANTY

Subject to the limitations and exclusions set forth below, Pierce Manufacturing provides the following warranty to the Buyer:

Coverage:	**The apparatus body shall be free from structural failures caused by defects in material and workmanship**
Warranty Begins:	**The date of the original purchase invoice (issued when the product ships from the factory).**
Warranty Period Ends After:	**Ten (10) Years - or - 100,000 Miles**
Conditions and Exclusions: **See Also Paragraphs 2 thru 4**	**This warranty applies only to the body tubular support and mounting structures and other structural components of the body of the vehicle model, as identified in the Pierce specifications for the Fire and Rescue Apparatus.** **This warranty does not apply to damage caused by corrosion.**

This limited warranty shall apply only if the product is properly maintained in accordance with Pierce's maintenance instructions and manuals and is used in service which is normal to the particular model. Normal service means service which does not subject the product to stresses or impacts greater than normally result from careful use. If the Buyer discovers a defect or nonconformity, it must notify Pierce in writing within thirty (30) days after the date of discovery, but in any event prior to the expiration of the warranty period. THIS LIMITED WARRANTY MAY NOT BE ASSIGNED OR OTHERWISE TRANSFERRED BY THE BUYER TO ANY SUBSEQUENT USER OR PURCHASER OR TO ANY OTHER PERSON OR ENTITY.

Notwithstanding anything to the contrary herein, Pierce makes no warranty whatsoever as to:

(a) any integral parts, components, attachments or trade accessories of or to the product that are not manufactured by Pierce, including but not limited to engines, transmissions, drivelines, axles, water pumps and generators; with respect to all such parts, components, attachments and accessories, Pierce shall assign to Buyer the applicable warranties, if any, made by the respective manufacturers thereof;

(b) any vehicle, chassis, or component, part, attachment or accessory damaged by misuse, neglect, fire, exposure to severe environmental or chemical conditions, acidic environment, improper maintenance, accident, crash, or force majeure such as natural disaster, lightning, earthquake, windstorm, hail, flood, war or riot;

(c) any vehicle, chassis or component, part, attachment or accessory that has been repaired, altered or assembled in any way by any person or entity other than Pierce which, in the sole judgment of Pierce, adversely affects the performance, stability or purpose for which it was manufactured; or

(d) products or parts which may in the ordinary course wear out and have to be replaced during the warranty period, including, but not limited to, tires, fluids, gaskets and light bulbs. Pierce assumes no responsibility for the assembly of its parts or subassemblies into finishing products or vehicles unless the assembly is performed by Pierce.

The original purchaser may void this warranty in part or in its entirety if the product is repaired or replaced (a) without prior written approval of the Pierce Customer Service Department; or (b) at a facility which has not been approved by Pierce as to technical capability. Any repairs, modifications, alterations or aftermarket parts added after manufacture without the authorization of Pierce may void this warranty.

2. DISCLAIMERS OF WARRANTIES

THE WARRANTY SET FORTH IN PARAGRAPH 1 IS THE SOLE AND EXCLUSIVE WARRANTY GIVEN BY PIERCE. PIERCE HEREBY DISCLAIMS AND EXCLUDES ALL OTHER WARRANTIES, WHETHER EXPRESS, IMPLIED OR STATUTORY, INCLUDING WITHOUT LIMITATION ANY WARRANTY OF MERCHANTABILITY, ANY WARRANTY OF FITNESS FOR A PARTICULAR PURPOSE, AND ANY WARRANTIES ARISING FROM COURSE OF DEALING OR USAGE OF TRADE.

3. BUYER'S EXCLUSIVE REMEDY.

If the product fails to conform to the warranty set forth in paragraph 1 during the warranty period, and such nonconformity is not due to misuse, neglect, accident or improper maintenance, Buyer must notify Pierce within the time period specified in paragraph 1, and shall make the product available for inspection by Pierce or its designated agent. At the request of Pierce, any allegedly defective product shall be returned to Pierce by Buyer for examination and/or repair. Buyer shall be responsible for the cost of such transportation, and for risk of loss of or damage to the product during transportation. Within a reasonable time, Pierce shall repair or replace (at Pierce's option and expense) any nonconforming or defective parts. Repair or replacement shall be made only by a facility approved in advance in writing by Pierce. THIS REMEDY SHALL BE THE EXCLUSIVE AND SOLE REMEDY FOR ANY BREACH OF WARRANTY.

4. EXCLUSION OF CONSEQUENTIAL AND INCIDENTAL DAMAGES.

Notwithstanding anything to the contrary herein or in any agreement between Pierce and Buyer, IN NO EVENT SHALL PIERCE BE LIABLE FOR ANY CONSEQUENTIAL, INCIDENTAL, SPECIAL, INDIRECT, OR PUNITIVE DAMAGES WHATSOEVER, WHETHER ARISING OUT OF BREACH OF CONTRACT, WARRANTY, TORT (INCLUDING NEGLIGENCE AND STRICT LIABILITY) OR OTHER THEORY OF LAW OR EQUITY, WITH RESPECT TO VEHICLES OR OTHER PRODUCTS SOLD BY PIERCE, OR THEIR OPERATION OR FAILURE TO OPERATE, OR ANY DEFECTS THEREIN, OR ANY UNDERTAKINGS, ACTS OR OMISSIONS RELATED THERETO, REGARDLESS OF WHETHER PIERCE HAS BEEN INFORMED OF THE POSSIBILITY OF ANY SUCH DAMAGES. Without limiting the generality of the foregoing, Pierce specifically disclaims any liability for property or personal injury damages, penalties, damages for lost profits or revenues, loss of vehicles or products or any associated equipment, cost of substitute vehicles or products, down-time, delay damages, any other types of economic loss, or for any claims by any third party for any such damages.

Note: Any Surety Bond, if a part of the sale of the vehicle as to which this limited warranty is provided, applies only to this Pierce Basic One Year Limited Warranty for such vehicle, and not to other warranties made by Pierce in a separate document (if any) or to the warranties (if any) made by any manufacturer (other than Pierce) of any part, component, attachment or accessory that is incorporated into or attached to the vehicle.

LIMITED WARRANTY

(Effective 07-08-2011)

SECTION 1 - WARRANTY TERMS

R•O•M Corporation ("R•O•M") warrants that the equipment and parts sold by it (collectively, the "Product") will be free from manufacturing defects for a period of up to 7 years from date of purchase provided that the Product is used under conditions of normal use, that regular periodic maintenance and service is performed and that the Product was installed in accordance with R•O•M's instructions.

The limited warranty is not transferable in the event the Product is sold, traded or transferred to another party.

SECTION 2 - EXCEPTIONS TO WARRANTY TERMS

2.1 R•O•M Replacement Parts:

a. Warranty period for manufacturing defects equivalent to warranty of original product.

2.2 R•O•M Roll-up Shutter Door / Horizontal Hose Bed Cover:

a. Warranty period for manufacturing defects is 7 years from the date of purchase (excluding electrical components).

b. *LED V3 Lightbar components* - Warranty period for manufacturing defects is 7 years from the date of purchase.

c. *Door ajar switch* - warranty period for manufacturing defects is 3 years from the date of purchase.

d. *All other electrical components* – warranty period for manufacturing defects is 1 year from the date of purchase.

e. Perfect Match Wet Paint System™:

- *PPG Delta / Delfleet*: Covered 100% for 84 months from date of purchase for excessive loss of gloss caused from cracking, checking and hazing. Covered 100% for 84 months from date of purchase for cracking or checking, peeling or de-lamination of the topcoat or other layer of paint.
- *Sikkens Autocoat LV:* Covered 100% for 84 months from date of purchase for items directly related to durability and appearance of the topcoat (gloss, color retention, cracking). Covered for 72 months from date of purchase, for items related to the integrity of the entire coating system (adhesion, peeling), coverage will be 100% for the first 36 months from date of purchase, from the 37th month to the 48th month from the date of purchase coverage will be 50%, from the 49th month to the 72nd month from date of purchase coverage will be 25%.
- *DuPont Performance Coating products – Imron and Imron Elite:* R•O•M warrants that finished areas will be free throughout the warranty period from: corrosion, blistering, cracking, peeling, hazing, chalking, delamination, and unreasonable loss of gloss throughout the entire finished area. Covered 100% for 60 months from date of purchase, coverage will be 75% from the 61st month to the 72nd month from the date of purchase, and coverage will be 50% from the 73rd month to the 84th month from date of purchase.
- *Other*: Contact factory.

2.3 R•O•M Extreme Cargo Tray and Slides:

a. Warranty period for manufacturing defects is 7 years from the date of purchase.

2.4 DuroLumen™ LED V3 Light:

a. Warranty period for manufacturing defects to the original consumer/purchaser is 7 years from the date of purchase.

2.5 LoadMaker™ Bulkhead (3" construction):

a. Warranty period for manufacturing defects is 1 year from the date of purchase.

b. *Core*: For the life of the bulkhead, the core will not delaminate or break from flexural movement along the length of the core.

2.6 Center ZoneMaker™ Bulkhead (2" construction):

a. Warranty period for manufacturing defects is 1 year from the date of purchase.

b. *Core*: For period of 5 years from date of purchase, the core will not delaminate or break from flexural movement along the length of the core.

2.7 T-WarrioR™ Bulkhead (3" construction):

a. Warranty period for manufacturing defects is 1 year from the date of purchase.

2.8 R•O•M RoadwarrioR™ and SidekicK™ Ramps, Carriers, Platforms, Ladders, etc...:

a. Warranty period for manufacturing defects is 1 year from the date of purchase.

2.9 R•O•M LinksGuard™ Chain Gates, Dock Gates, Truck Gates, etc…:

a. Warranty period for manufacturing defects is 1 year from the date of purchase.

SECTION 3 - EXCLUSIONS FROM WARRANTY

3.1 This limited warranty does not cover normal maintenance, service and adjustments or damage to Product relating to:

a. Accident, alteration, misuse, negligence, abuse, vandalism or physical damage;

b. Any repair, replacement or alteration by a facility not approved in advance by R•O•M;

c. Improper installation (including electrical damage caused by improper installation), failure to follow the installation instructions provided by R•O•M;

d. Use inconsistent with the instruction manual or abuse;

e. Use of equipment or parts not manufactured by R•O•M;

f. Fire, explosion, implosion, flood, earthquake, lightning strike, acid rain, chemical fallout, catastrophic event, or other act of God or nature;

g. Exposure to severe environmental conditions or excessive heat;

h. Exposure to chemicals and other substances (other than cleaning agents specifically recommended in the instruction manual);

i. Exposure to unintended uses and/or substances;

j. Acts or omissions of any carrier delivering the Products;

k. Any failure to care for or maintain the Products in accordance with the instruction manual;

l. Damage to the R•O•M Roll-up Shutter Door resulting from the door being left in the open position while the vehicle is in motion.

m. Damage to the R•O•M Roll-up Shutter Perfect Match Wet Paint System™ resulting from or relating to:

- Application or removal of stickers, decals, adhesive tapes or adhesives of any kind or other subsequently applied signs, artwork or lettering; or

- Accidents, scratches, abrasions, chips, bruises and gloss reduction to the Perfect Match Wet Paint System™ caused intentionally, accidentally or by normal vehicle use and maintenance; or
- Hazing, chalking, loss of gloss or peeling of the Perfect Match Wet Paint System™ caused by improper care, abrasive polishes, aggressive chemicals, cleaning agents, heavy-duty pressure washing or aggressive mechanical wash systems; or

n. Damage to the LoadMaker™, ZoneMaker™, or T-WarrioR™ bulkheads resulting from excessive compressive forces of any kind, any puncture, cutting, or ripping.

o. The DuroLumen™ LED V3 Light limited warranty does not apply to:

- Severe applications, such as off-road vehicles, construction equipment, buses, or external applications (these applications are examples only and are not all inclusive of such excluded applications); or
- Damage due to chemicals and or incompatible cleaners.

SECTION 4 - CONDITIONS OF WARRANTY

4.1 This limited warranty is conditioned upon and will be invalidated by failure to comply with the following conditions:

a. The Product and any ancillary equipment, components or parts must be installed in accordance with the instruction manual provided by R•O•M.

b. Regular maintenance and service must be performed on the Products;

c. The Products must be put to their intended use;

d. Replacement parts must be manufactured by R•O•M;

e. Complete compliance with the claims procedure set forth in Section 5 below; and

f. R•O•M must have received full and timely payment of all invoices issued to the customer.

SECTION 5 - NOTICE OF CLAIMS AND REPLACEMENT POLICY

5.1 Claims under this limited warranty must be in writing and presented to and received by R•O•M Corporation at 6800 East 163rd Street, Belton, Missouri 64012, within the applicable warranty period set forth in Sections 1 and 2 above. All claims must include the serial number of the Product, the name of the purchaser, and the date the alleged problem was discovered. Within 30 business days of receiving a written claim pursuant to Section 5.1, a member of R•O•M's staff will contact the customer and arrange for a time and place for a R•O•M representative to inspect the Products, if necessary. Alternatively, R•O•M may request the return of the Product.

If R•O•M instructs the customer to return the Products to R•O•M, the item will be assigned a Return Goods Authorization ("RGA") number and the item must be returned to R•O•M within 30 days of the RGA number being assigned. If the item is not returned within 30 days of the assignment of the RGA number, this limited warranty will terminate and R•O•M will have no further liability or obligation with respect to that Product.

5.2 After a representative of R•O•M inspects the Products or assesses the problem, R•O•M will take appropriate action, in its sole discretion, to remedy the alleged problem. If the claim is for a manufacturing defect, R•O•M must be satisfied, in its sole discretion, that the Products were defective at the time it left R•O•M's factory.

5.3 If R•O•M ships replacement parts prior to the receipt of the allegedly defective part, the replacement part at R•O•M's discretion will be invoiced FOB Belton, Missouri and upon receipt of the allegedly defective part, R•O•M will credit the customer's account, if R•O•M determines, in its sole discretion, that the returned part is covered by this limited warranty.

5.4 Labor reimbursement up to 3 years. R•O•M will determine, at it's own discretion, the amount of time that it will reimburse for any labor associated with this limited warranty, depending on the nature of the claim. R•O•M will not reimburse any labor connected with the removal or reinstallation of adhesives, decals, stickers, tapes, etc… R•O•M may reimburse for labor with prior approval from an authorized R•O•M representative strictly adhering to the guidelines listed below. This authorization will

pay for removal, replacement and reinstallation of the allegedly defective Product. Warranty coverage only applies to original equipment supplied by R•O•M and does not extend to door attachments including (but not limited to) decals, emblems, stripes and adhesives, equipment removal, compartment configurations (i.e.: false walls, shelves), etc… Reimbursement is for repairs only, travel to and from truck location is not covered.

Guidelines – maximum allowance:

R•O•M Roll-up Shutter Doors and Parts:

- 1 Door 1.5 hours
- 1 Curtain (slats) 1.5 hours
- 1 Door Ajar Switch 1.0 hour
- Other Contact Factory
- 1 Bottom Rail Assembly 1.0 hour
- 1 Slat Replacement 1.5 hours
- 1 Operator 1.5 hours

Other R•O•M Products: (Contact Factory)

Maximum reimbursement rate is $60.00 per hour.

SECTION 6 - REMEDY

6.1 The customer's exclusive remedy under this limited warranty is the repair or replacement of the Product, as determined by R•O•M in its sole discretion.

SECTION 7 - LIMITATION OF LIABILITY

7.1 THE LIMITED WARRANTY DESCRIBED ABOVE IS THE ONLY WARRANTY MADE BY R•O•M CORPORATION, AND SHALL BE IN LIEU OF ANY OTHER WARRANTY, EXPRESS OR IMPLIED, INCLUDING, BUT NOT LIMITED TO, ANY IMPLIED WARRANTY OF MERCHANTABILITY OR FITNESS FOR A PARTICULAR PURPOSE. THERE ARE NO WARRANTIES THAT EXTEND BEYOND THE DESCRIPTION ON THE FACE HEREOF. R•O•M CORPORATION SHALL NOT BE LIABLE FOR ANY OTHER DAMAGE OF ANY KIND INCLUDING, BUT NOT LIMITED TO, PUNATIVE, SPECIAL, INCIDENTAL OR CONSEQUENTIAL DAMAGES, INCLUDING DAMAGES FOR LOST PROFITS, LOST SALES, OR INJURY TO PERSON OR PROPERTY. NO REMEDY FOR SUCH DAMAGES SHALL BE AVAILABLE REGARDLESS OF WHETHER SUCH CLAIM IS BASED ON CONTRACT, NEGLIGENCE, TORT OR STRICT LIABILITY.

7.2 NO STATEMENT MADE BY ANY PERSON WITH RESPECT TO ANY PRODUCT SHALL CONSTITUTE A WARRANTY, BE RELIED UPON ANY CUSTOMER OR BE DEEMED PART OF THIS LIMITED WARRANTY OR ANY SALE AGREEMENT BETWEEN R•O•M AND THE CUSTOMER.

SECTION 8 – CHANGED, RETURNED OR CANCELLED ORDERS

8.1 Changed orders: Alterations or modifications requested within 10 working days (15 working days for painted orders) of the scheduled ship date could result in additional charges for incurred material and labor costs, and may effect the delivery date.

8.2 Cancelled orders: Cancelled orders are subject to a 10% cancellation fee.

8.3 Returned items: With prior approval goods may be returned within 10 business days of invoice date (excludes custom made products & parts). Returned goods are subject to a 15% restocking fee. No credit allowed for goods returned without prior approval.

Waterous Seven-Year Limited Warranty

WATEROUS warrants, to the original Buyer only, that products manufactured by WATEROUS will be free from defects in material and workmanship under normal use and service for a period of seven (7) years from the date the product is first placed in service, or seven and one-half (7-1/2) years from the date of shipment by WATEROUS, whichever period shall be the first to expire; provided the Buyer notifies WATEROUS, in writing, of the defect in said product within the warranty period, and said product is found by WATEROUS to be nonconforming with the aforesaid warranty. When required in writing by WATEROUS, defective products must be promptly returned by Buyer to WATEROUS at WATEROUS' plant at South St. Paul, Minnesota, or at such other place as may be specified by WATEROUS, with transportation and other charges prepaid. A Returned Material Authorization (RMA) is required for all products and parts and may be requested by phone, fax, email, or mail. The aforesaid warranty excludes any responsibility or liability of WATEROUS for:

(a) damages or defects due to accident, abuse, misuse, abnormal operating conditions, negligence, accidental causes, use in non-firefighting applications, or improper maintenance, or attributable to written specifications or instructions furnished by Buyer;

(b) defects in products manufactured by others and furnished by WATEROUS hereunder, it being understood and agreed by the parties that the only warranty provided for such products shall be the warranty provided by the manufacturer thereof which, if assignable, WATEROUS will assign to Buyer, if requested by Buyer;

(c) any product or part, altered, modified, serviced or repaired other than by WATEROUS, without its prior written consent;

(d) the cost of dismantling, removing, transporting, storing, or insuring the defective product or part and the cost of reinstallation; and

(e) normal wear items (packing, strainers, filters, light bulbs, anodes, intake screens, mechanical seals, etc.).

ALL OTHER WARRANTIES ARE EXCLUDED, WHETHER EXPRESS OR IMPLIED BY OPERATION OF LAW OR OTHERWISE, INCLUDING ALL IMPLIED WARRANTIES OF MERCHANTABILITY OR FITNESS FOR A PARTICULAR PURPOSE. IN NO EVENT, WHETHER AS A RESULT OF BREACH OF CONTRACT, WARRANTY, TORT (INCLUDING NEGLIGENCE), STRICT LIABILITY, OR ANY OTHER CAUSE OF ACTION, SHALL WATEROUS BE LIABLE FOR ANY PUNITIVE, SPECIAL, INCIDENTAL OR CONSEQUENTIAL DAMAGES, OR FOR PERSONAL INJURY OR PROPERTY DAMAGES.

The exclusive remedy of Buyer and the sole liability of WATEROUS, whether based on contract, warranty, tort or any other basis of recovery whatsoever, is expressly limited at the election of WATEROUS to:

(a) the replacement at the agreed point of delivery of any product or part, which upon inspection by WATEROUS or its duly authorized representative, is found not to conform to the limited warranty set forth above, or

(b) the repair of such product or part, or

(c) the refund or crediting to Buyer of the net sales price of the defective product or part.

BUYER'S REMEDIES CONTAINED HEREIN ARE EXCLUSIVE OF ANY OTHER REMEDY OTHERWISE AVAILABLE TO BUYER.

Waterous Company
125 Hardman Avenue South
South St. Paul, MN 55075 USA
www.waterousco.com

WATEROUS

F-2891 (04/15/20)

Fire and Rescue Apparatus

Ten (10) Year Material and Workmanship Stainless Steel Piping

Limited Warranty

1. LIMITED WARRANTY

Subject to the limitations and exclusions set forth below, Pierce Manufacturing provides the following warranty to the Buyer:

Coverage:	**Stainless steel piping shall be free from structural failures caused by defects in material and workmanship, or perforation caused by corrosion.**
Warranty Begins:	**The date of the original purchase invoice (issued when the product ships from the factory).**
Warranty Period Ends After:	**Ten (10) Years - or - 100,000 Miles**
Conditions and Exclusions: **See Also Paragraphs 2 thru 4**	**Pierce's obligation under this warranty is limited to repairing or replacing without charge, as Pierce may elect, the stainless steel piping or components which Pierce determines to have failed due to defective material and workmanship, or perforation caused by corrosion.** **This warranty does not cover the use of fluoroprotein (FP) type foam. The sodium chloride within FP foam can cause long-term damage to system components if not thoroughly flushed immediately after use.**

This limited warranty shall apply only if the product is properly maintained in accordance with Pierce's maintenance instructions and manuals and is used in service which is normal to the particular model. Normal service means service which does not subject the product to stresses or impacts greater than normally result from careful use. If the Buyer discovers a defect or nonconformity, it must notify Pierce in writing within thirty (30) days after the date of discovery, but in any event prior to the expiration of the warranty period. THIS LIMITED WARRANTY MAY NOT BE ASSIGNED OR OTHERWISE TRANSFERRED BY THE BUYER TO ANY SUBSEQUENT USER OR PURCHASER OR TO ANY OTHER PERSON OR ENTITY.

Notwithstanding anything to the contrary herein, Pierce makes no warranty whatsoever as to:

(a) any integral parts, components, attachments or trade accessories of or to the product that are not manufactured by Pierce, including but not limited to engines, transmissions, drivelines, axles, water pumps and generators; with respect to all such parts, components, attachments and accessories, Pierce shall assign to Buyer the applicable warranties, if any, made by the respective manufacturers thereof;

(b) any vehicle, chassis, or component, part, attachment or accessory damaged by misuse, neglect, fire, exposure to severe environmental or chemical conditions, acidic environment, improper maintenance, accident, crash, or force majeure such as natural disaster, lightning, earthquake, windstorm, hail, flood, war or riot;

(c) any vehicle, chassis or component, part, attachment or accessory that has been repaired, altered or assembled in any way by any person or entity other than Pierce which, in the sole judgment of Pierce, adversely affects the performance, stability or purpose for which it was manufactured; or

(d) products or parts which may in the ordinary course wear out and have to be replaced during the warranty period, including, but not limited to, tires, fluids, gaskets and light bulbs. Pierce assumes no responsibility for the assembly of its parts or subassemblies into finishing products or vehicles unless the assembly is performed by Pierce.

The original purchaser may void this warranty in part or in its entirety if the product is repaired or replaced (a) without prior written approval of the Pierce Customer Service Department; or (b) at a facility which has not been approved by Pierce as to technical capability. Any repairs, modifications, alterations or aftermarket parts added after manufacture without the authorization of Pierce may void this warranty.

2. DISCLAIMERS OF WARRANTIES

THE WARRANTY SET FORTH IN PARAGRAPH 1 IS THE SOLE AND EXCLUSIVE WARRANTY GIVEN BY PIERCE. PIERCE HEREBY DISCLAIMS AND EXCLUDES ALL OTHER WARRANTIES, WHETHER EXPRESS, IMPLIED OR STATUTORY, INCLUDING WITHOUT LIMITATION ANY WARRANTY OF MERCHANTABILITY, ANY WARRANTY OF FITNESS FOR A PARTICULAR PURPOSE, AND ANY WARRANTIES ARISING FROM COURSE OF DEALING OR USAGE OF TRADE.

3. BUYER'S EXCLUSIVE REMEDY.

If the product fails to conform to the warranty set forth in paragraph 1 during the warranty period, and such nonconformity is not due to misuse, neglect, accident or improper maintenance, Buyer must notify Pierce within the time period specified in paragraph 1, and shall make the product available for inspection by Pierce or its designated agent. At the request of Pierce, any allegedly defective product shall be returned to Pierce by Buyer for examination and/or repair. Buyer shall be responsible for the cost of such transportation, and for risk of loss of or damage to the product during transportation. Within a reasonable time, Pierce shall repair or replace (at Pierce's option and expense) any nonconforming or defective parts. Repair or replacement shall be made only by a facility approved in advance in writing by Pierce. THIS REMEDY SHALL BE THE EXCLUSIVE AND SOLE REMEDY FOR ANY BREACH OF WARRANTY.

4. EXCLUSION OF CONSEQUENTIAL AND INCIDENTAL DAMAGES.

Notwithstanding anything to the contrary herein or in any agreement between Pierce and Buyer, IN NO EVENT SHALL PIERCE BE LIABLE FOR ANY CONSEQUENTIAL, INCIDENTAL, SPECIAL, INDIRECT, OR PUNITIVE DAMAGES WHATSOEVER, WHETHER ARISING OUT OF BREACH OF CONTRACT, WARRANTY, TORT (INCLUDING NEGLIGENCE AND STRICT LIABILITY) OR OTHER THEORY OF LAW OR EQUITY, WITH RESPECT TO VEHICLES OR OTHER PRODUCTS SOLD BY PIERCE, OR THEIR OPERATION OR FAILURE TO OPERATE, OR ANY DEFECTS THEREIN, OR ANY UNDERTAKINGS, ACTS OR OMISSIONS RELATED THERETO, REGARDLESS OF WHETHER PIERCE HAS BEEN INFORMED OF THE POSSIBILITY OF ANY SUCH DAMAGES. Without limiting the generality of the foregoing, Pierce specifically disclaims any liability for property or personal injury damages, penalties, damages for lost profits or revenues, loss of vehicles or products or any associated equipment, cost of substitute vehicles or products, down-time, delay damages, any other types of economic loss, or for any claims by any third party for any such damages.

Note: Any Surety Bond, if a part of the sale of the vehicle as to which this limited warranty is provided, applies only to this Pierce Basic One Year Limited Warranty for such vehicle, and not to other warranties made by Pierce in a separate document (if any) or to the warranties (if any) made by any manufacturer (other than Pierce) of any part, component, attachment or accessory that is incorporated into or attached to the vehicle.

Fire and Rescue Apparatus

Twenty (20) Year Structural Integrity
Pierce Aerial Device

Limited Warranty

1. LIMITED WARRANTY

Subject to the limitations and exclusions set forth below, Pierce Manufacturing provides the following warranty to the Buyer:

Coverage:	**Each new Pierce Aerial Device shall be free from defects in material and workmanship.** **Aerial Device Models Covered by this warranty include:** **Aerial Platforms** **Aerial Ladders** **SkyBoom**
Warranty Begins:	**The date of the original purchase invoice (issued when the product ships from the factory).**
Warranty Period Ends After:	**Twenty (20) Years** **- or -** **100,000 Miles**
Conditions and Exclusions: **See Also Paragraphs 2 thru 4**	**This warranty applies only to the torque box, turntable, aerial sections and other structural components of the aerial device, as identified in the Pierce specifications for the aerial device. This warranty shall be void if, or to the extent that the aerial device is not maintained in strict compliance with NFPA Standard 1911 in effect at time of sale, including such periodic inspections and testing by qualified third parties as are required by that Standard as it may be in effect from time to time. Proof of such compliance shall accompany any claims under this warranty. Third party testing agencies known to Pierce to be qualified for such purposes may be obtained from the Pierce Customer Service Department** **This warranty does not apply to damage caused by corrosion.**

This limited warranty shall apply only if the product is properly maintained in accordance with Pierce's maintenance instructions and manuals and is used in service which is normal to the particular model. Normal service means service which does not subject the product to stresses or impacts greater than normally result from careful use. If the Buyer discovers a defect or nonconformity, it must notify Pierce in writing within thirty (30) days after the date of discovery, but in any event prior to the expiration of the warranty period. THIS LIMITED WARRANTY MAY NOT BE ASSIGNED OR OTHERWISE TRANSFERRED BY THE BUYER TO ANY SUBSEQUENT USER OR PURCHASER OR TO ANY OTHER PERSON OR ENTITY.

Notwithstanding anything to the contrary herein, Pierce makes no warranty whatsoever as to:

(a) any integral parts, components, attachments or trade accessories of or to the product that are not manufactured by Pierce, including but not limited to engines, transmissions, drivelines, axles, water pumps and generators; with respect to all such parts, components, attachments and accessories, Pierce shall assign to Buyer the applicable warranties, if any, made by the respective manufacturers thereof;

(b) any vehicle, chassis, or component, part, attachment or accessory damaged by misuse, neglect, fire, exposure to severe environmental or chemical conditions, acidic environment, improper maintenance, accident, crash, or force majeure such as natural disaster, lightning, earthquake, windstorm, hail, flood, war or riot;

(c) any vehicle, chassis or component, part, attachment or accessory that has been repaired, altered or assembled in any way by any person or entity other than Pierce which, in the sole judgment of Pierce, adversely affects the performance, stability or purpose for which it was manufactured; or

(d) products or parts which may in the ordinary course wear out and have to be replaced during the warranty period, including, but not limited to, tires, fluids, gaskets and light bulbs. Pierce assumes no responsibility for the assembly of its parts or subassemblies into finishing products or vehicles unless the assembly is performed by Pierce.

The original purchaser may void this warranty in part or in its entirety if the product is repaired or replaced (a) without prior written approval of the Pierce Customer Service Department; or (b) at a facility which has not been approved by Pierce as to technical capability. Any repairs, modifications, alterations or aftermarket parts added after manufacture without the authorization of Pierce may void this warranty.

2. DISCLAIMERS OF WARRANTIES

THE WARRANTY SET FORTH IN PARAGRAPH 1 IS THE SOLE AND EXCLUSIVE WARRANTY GIVEN BY PIERCE. PIERCE HEREBY DISCLAIMS AND EXCLUDES ALL OTHER WARRANTIES, WHETHER EXPRESS, IMPLIED OR STATUTORY, INCLUDING WITHOUT LIMITATION ANY WARRANTY OF MERCHANTABILITY, ANY WARRANTY OF FITNESS FOR A PARTICULAR PURPOSE, AND ANY WARRANTIES ARISING FROM COURSE OF DEALING OR USAGE OF TRADE.

3. BUYER'S EXCLUSIVE REMEDY.

If the product fails to conform to the warranty set forth in paragraph 1 during the warranty period, and such nonconformity is not due to misuse, neglect, accident or improper maintenance, Buyer must notify Pierce within the time period specified in paragraph 1, and shall make the product available for inspection by Pierce or its designated agent. At the request of Pierce, any allegedly defective product shall be returned to Pierce by Buyer for examination and/or repair. Buyer shall be responsible for the cost of such transportation, and for risk of loss of or damage to the product during transportation. Within a reasonable time, Pierce shall repair or replace (at Pierce's option and expense) any nonconforming or defective parts. Repair or replacement shall be made only by a facility approved in advance in writing by Pierce. THIS REMEDY SHALL BE THE EXCLUSIVE AND SOLE REMEDY FOR ANY BREACH OF WARRANTY.

4. EXCLUSION OF CONSEQUENTIAL AND INCIDENTAL DAMAGES.

Notwithstanding anything to the contrary herein or in any agreement between Pierce and Buyer, IN NO EVENT SHALL PIERCE BE LIABLE FOR ANY CONSEQUENTIAL, INCIDENTAL, SPECIAL, INDIRECT, OR PUNITIVE DAMAGES WHATSOEVER, WHETHER ARISING OUT OF BREACH OF CONTRACT, WARRANTY, TORT (INCLUDING NEGLIGENCE AND STRICT LIABILITY) OR OTHER THEORY OF LAW OR EQUITY, WITH RESPECT TO VEHICLES OR OTHER PRODUCTS SOLD BY PIERCE, OR THEIR OPERATION OR FAILURE TO OPERATE, OR ANY DEFECTS THEREIN, OR ANY UNDERTAKINGS, ACTS OR OMISSIONS RELATED THERETO, REGARDLESS OF WHETHER PIERCE HAS BEEN INFORMED OF THE POSSIBILITY OF ANY SUCH DAMAGES. Without limiting the generality of the foregoing, Pierce specifically disclaims any liability for property or personal injury damages, penalties, damages for lost profits or revenues, loss of vehicles or products or any associated equipment, cost of substitute vehicles or products, down-time, delay damages, any other types of economic loss, or for any claims by any third party for any such damages.

Note: Any Surety Bond, if a part of the sale of the vehicle as to which this limited warranty is provided, applies only to this Pierce Basic One Year Limited Warranty for such vehicle, and not to other warranties made by Pierce in a separate document (if any) or to the warranties (if any) made by any manufacturer (other than Pierce) of any part, component, attachment or accessory that is incorporated into or attached to the vehicle.

AMITY FIRE AND SAFETY, INC.
3750 CHESTNUT ROAD
ALBURTIS, PA 18011-0451
Phone: 610-966-3115
Fax: 610-965-6313

* STANDARD FIVE YEAR WARRANTY *

(standard warranty is in effect for parts shipped after 4/15/10)

Three Function Swivel

A. PRESHIPMENT TESTING The Three Function Swivel fabricated by Amity which is exposed to pressure during normal use is subject to final inspection using the following pressure minimums:

1. Hydrostatic applications will be tested to 400 PSI unless specified otherwise on approved drawings. Operating pressures on installed systems are not to exceed 250 PSI at any point in the system. Warranty will be voided and Amity will not be held liable for failure and/or damage occurring from Water Hammering or freezing of water in any system.
2. Hydraulic applications will be tested to 4000 PSI. System operating pressure in application to be 3000 PSI maximum.
3. Dielectric and Continuity Test all circuits. 30 Amp max current loading.

B. THREE FUNCTION SWIVEL MAINTENANCE – Our Three Function Swivel has been fully tested at assembly. Under no circumstances is there to be any maintenance performed internally or externally to the Three Function Swivel by Purchaser or any other third party other than an authorized representative of or Amity itself. The Three Function Swivel is sealed and must remain so. The Three Function Swivel is designed for a long maintenance free life. Should any problems occur or replacement be necessary, first contact Amity. There is to be no field maintenance performed on the Three Function Swivel .

C. MOUNTING REQUIREMENTS – The following are the mounting requirements for the Three Function Swivel:

1. Mounting points and methods are to be determined at the initial design stage. All drawings and applicable documentation must be signed off by both parties and filed for future reference. No deviation to the approved mounting is allowed without approval from Amity.
2. The Three Function Swivel is to be mounted concentric to the center of the turntable bearing.
3. All inlet and outlet plumbing to conform to swivel mounting, under no circumstances is the Three Function Swivel to be positioned to match connections. This will avoid putting excessive loads on the Three Function Swivel. All tubing or piping to be supported by means other than the Three Function Swivel.

D. LIMITED WARRANTY, LIMITATIONS, CONDITIONS AND PROCEDURES REQUIRED.

1. The Three Function Swivel is warranted to be free of defects in labor and/or materials for a period of five (5) years from the Date of Service. For purposes here, “Date of Service” shall mean the date when the Three Function Swivel, or the unit to which the Three Function Swivel is incorporated, passes final Underwriters Laboratory testing, or similarly compliant testing, and is certified for service. Evidence of such Date of Service shall be required in connection with any warranty claim by Purchaser.
2. The Three Function Swivel shall be repaired or replaced at the sole option and expense of the Amity provided the Three Function Swivel alleged to be defective was used for its intended normal use of operation and subject to the following qualifications and limitations.
3. Any alteration of the Three Function Swivel without consent from Amity is strictly forbidden and shall void warranty.
4. No welding shall be performed on finished Three Function Swivel.
5. No responsibility is assumed for any malfunctions or damages which are occasionally caused by foreign objects which may be ingested into water or hydraulic systems such as, but not limited to stones, sand or metal chips.
6. Amity assumes responsibility for our Three Function Swivel, which is defective only, and therefore, it will not assume responsibility for labor to either remove or install our Three Function Swivel unless it agrees in writing to assume such responsibility.
7. Unless otherwise approved in writing by the Amity all returns of defective Three Function Swivels (or allegedly defective Three Function Swivels) are at Purchaser’s expense and must include a RGA number issued by the Amity.

8. All warranty claims must be presented at the time the problem occurs, or as soon as practical thereafter, either called or faxed to the Amity and include the numbers on the assembly's Amity's label with a detailed explanation of the difficulty in order for the matter to be appropriately evaluated and resolved.
9. Amity will not be held liable for damage incurred during shipment.
10. No responsibility shall be assumed for misuse or improper mounting, unreasonably use or abuse of the Three Function Swivel and or failure to provide or use improper maintenance, failure to follow written installation and use in instruction or any use other than the customary designed use.

THE REMEDIES PROVIDED IN THE ABOVE EXPRESS LIMITED WARRANTY AND ARE THE SOLE AND EXCLUSIVE REMEDIES AVAILABLE. NO OTHER EXPRESS WARRANTIES ARE MADE. ALL IMPLIED WARRANTIES, INCLUDING BUT NOT LIMITED TO ANY IMPLIED WARRANTY OF MERCHANTABILITY OR FITNESS FOR A PARTICULAR PURPOSE OR USE ARE LIMITED IN DURATION AS SET FORTH ABOVE. IN NO EVENT SHALL THE AMITY ASSUME OR BE LIABLE FOR ANY INCIDENTAL OR CONSEQUENTIAL DAMAGES.

THE WITHIN DESCRIBED WARRANTY SHALL ONLY BE AFFORDED TO THE ORIGINAL PURCHASER OR FOR INCORPORATION INTO ANOTHER UNIT AND TO FIRST PURCHASER AS PART OF COMPLETED UNIT, HOWEVER, THE WARRANTY PERIOD OF FIVE YEARS IS FROM THE DATE OF SERVICE WITH THE UNDERSTANDING IT IS INSTALLED WITHIN A REASONABLE TIME PERIOD.

Dated: _____ ____, 20__



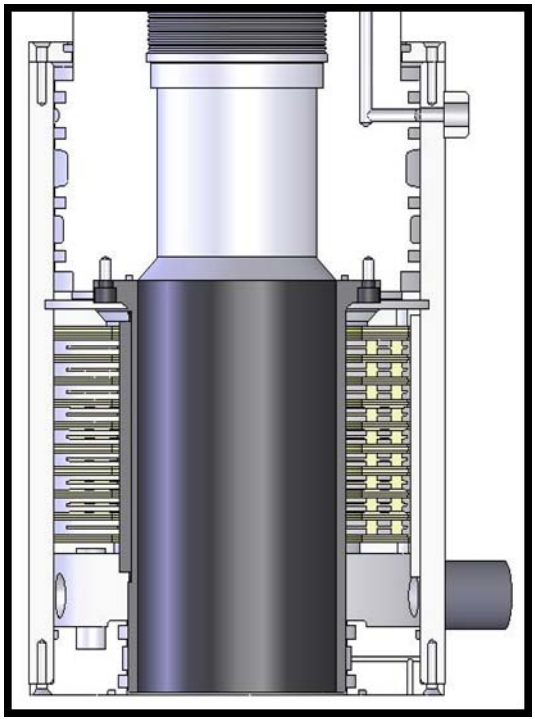

Fire and Rescue Apparatus

Five (5) Year Material and Workmanship Aerial Hydraulic System Components

Three (3) Year Material and Workmanship Aerial Hydraulic System Seals

Limited Warranty

1. LIMITED WARRANTY

Subject to the limitations and exclusions set forth below, Pierce Manufacturing provides the following warranty to the Buyer:

Coverage:	**The aerial hydraulic system components and seals shall be free from component or structural failures caused by defects in material and/or workmanship.**
Warranty Begins:	**The date of the original purchase invoice (issued when the product ships from the factory).**
Warranty Period Ends After:	**Five (5) Years and Three (3) Years**
Conditions and Exclusions: **See Also Paragraphs 2 thru 4**	**Pierce's obligation under this warranty is limited to repairing or replacing without charge, as Pierce may elect, the hydraulic lines, fittings, valves, seals, cylinders, filters, pumps, hydraulic motors, rotary actuators, or components which Pierce determines to have failed due to defective material and workmanship.** **This warranty shall not apply unless the aerial device is inspected in accordance with NFPA 1911 Standard for Inspection, Maintenance, Testing, and Retirement of In-Service Automotive Fire Apparatus and the applicable Pierce Operator and Maintenance Manuals.**

This limited warranty shall apply only if the product is properly maintained in accordance with Pierce's maintenance instructions and manuals and is used in service which is normal to the particular model. Normal service means service which does not subject the product to stresses or impacts greater than normally result from careful use. If the Buyer discovers a defect or nonconformity, it must notify Pierce in writing within thirty (30) days after the date of discovery, but in any event prior to the expiration of the warranty period. THIS LIMITED WARRANTY MAY NOT BE ASSIGNED OR OTHERWISE TRANSFERRED BY THE BUYER TO ANY SUBSEQUENT USER OR PURCHASER OR TO ANY OTHER PERSON OR ENTITY.

Notwithstanding anything to the contrary herein, Pierce makes no warranty whatsoever as to:

(a) any integral parts, components, attachments or trade accessories of or to the product that are not manufactured by Pierce, including but not limited to engines, transmissions, drivelines, axles, water pumps and generators; with respect to all such parts, components, attachments and accessories, Pierce shall assign to Buyer the applicable warranties, if any, made by the respective manufacturers thereof;

(b) any vehicle, chassis, or component, part, attachment or accessory damaged by misuse, neglect, fire, exposure to severe environmental or chemical conditions, acidic environment, improper maintenance, accident, crash, or force majeure such as natural disaster, lightning, earthquake, windstorm, hail, flood, war or riot;

(c) any vehicle, chassis or component, part, attachment or accessory that has been repaired, altered or assembled in any way by any person or entity other than Pierce which, in the sole judgment of Pierce, adversely affects the performance, stability or purpose for which it was manufactured; or

(d) products or parts which may in the ordinary course wear out and have to be replaced during the warranty period, including, but not limited to, tires, fluids, gaskets and light bulbs. Pierce assumes no responsibility for the assembly of its parts or subassemblies into finishing products or vehicles unless the assembly is performed by Pierce.

The original purchaser may void this warranty in part or in its entirety if the product is repaired or replaced (a) without prior written approval of the Pierce Customer Service Department; or (b) at a facility which has not been approved by Pierce as to technical capability. Any repairs, modifications, alterations or aftermarket parts added after manufacture without the authorization of Pierce may void this warranty.

2. DISCLAIMERS OF WARRANTIES

THE WARRANTY SET FORTH IN PARAGRAPH 1 IS THE SOLE AND EXCLUSIVE WARRANTY GIVEN BY PIERCE. PIERCE HEREBY DISCLAIMS AND EXCLUDES ALL OTHER WARRANTIES, WHETHER EXPRESS, IMPLIED OR STATUTORY, INCLUDING WITHOUT LIMITATION ANY WARRANTY OF MERCHANTABILITY, ANY WARRANTY OF FITNESS FOR A PARTICULAR PURPOSE, AND ANY WARRANTIES ARISING FROM COURSE OF DEALING OR USAGE OF TRADE.

3. BUYER'S EXCLUSIVE REMEDY.

If the product fails to conform to the warranty set forth in paragraph 1 during the warranty period, and such nonconformity is not due to misuse, neglect, accident or improper maintenance, Buyer must notify Pierce within the time period specified in paragraph 1, and shall make the product available for inspection by Pierce or its designated agent. At the request of Pierce, any allegedly defective product shall be returned to Pierce by Buyer for examination and/or repair. Buyer shall be responsible for the cost of such transportation, and for risk of loss of or damage to the product during transportation. Within a reasonable time, Pierce shall repair or replace (at Pierce's option and expense) any nonconforming or defective parts. Repair or replacement shall be made only by a facility approved in advance in writing by Pierce. THIS REMEDY SHALL BE THE EXCLUSIVE AND SOLE REMEDY FOR ANY BREACH OF WARRANTY.

4. EXCLUSION OF CONSEQUENTIAL AND INCIDENTAL DAMAGES.

Notwithstanding anything to the contrary herein or in any agreement between Pierce and Buyer, IN NO EVENT SHALL PIERCE BE LIABLE FOR ANY CONSEQUENTIAL, INCIDENTAL, SPECIAL, INDIRECT, OR PUNITIVE DAMAGES WHATSOEVER, WHETHER ARISING OUT OF BREACH OF CONTRACT, WARRANTY, TORT (INCLUDING NEGLIGENCE AND STRICT LIABILITY) OR OTHER THEORY OF LAW OR EQUITY, WITH RESPECT TO VEHICLES OR OTHER PRODUCTS SOLD BY PIERCE, OR THEIR OPERATION OR FAILURE TO OPERATE, OR ANY DEFECTS THEREIN, OR ANY UNDERTAKINGS, ACTS OR OMISSIONS RELATED THERETO, REGARDLESS OF WHETHER PIERCE HAS BEEN INFORMED OF THE POSSIBILITY OF ANY SUCH DAMAGES. Without limiting the generality of the foregoing, Pierce specifically disclaims any liability for property or personal injury damages, penalties, damages for lost profits or revenues, loss of vehicles or products or any associated equipment, cost of substitute vehicles or products, down-time, delay damages, any other types of economic loss, or for any claims by any third party for any such damages.

Note: Any Surety Bond, if a part of the sale of the vehicle as to which this limited warranty is provided, applies only to this Pierce Basic One Year Limited Warranty for such vehicle, and not to other warranties made by Pierce in a separate document (if any) or to the warranties (if any) made by any manufacturer (other than Pierce) of any part, component, attachment or accessory that is incorporated into or attached to the vehicle.

AMITY FIRE AND SAFETY, INC.
3750 CHESTNUT ROAD
ALBURTIS, PA 18011-0451
Phone: 610-966-3115
Fax: 610-965-6313

* STANDARD TEN YEAR WARRANTY *

(standard warranty is in effect for parts shipped after 4/15/10)

Telescopic Waterways

A. PRESHIPMENT TESTING All waterways fabricated by Amity are final inspected using the following pressure minimums:

1. Hydrostatic applications will be tested to 400 PSI unless specified otherwise on approved drawings. Operating pressures on installed systems are not to exceed 250 PSI at any point in the system. Warranty will be voided and Amity will not be held liable for failure and/or damage occurring from Water Hammering or freezing of water in any system.

B. COMPONENTS DESCRIPTION AND MAINTENANCE

1. All components are thoroughly greased at assembly. Since internally lubricated seals are used, regular greasing is not required. We recommend components not be greased at installation.
2. Slip Tube Assemblies may be greased at the Amity's regularly scheduled Aerial Inspections. The seals in the Slip Tube Assemblies are self-lubricating, so greasing is not mandatory. We do recommend a visual inspection of the Slip Tube Assembly while it is fully extended after initial installation, from that point on we recommend inspection every ten hours of aerial operation. If any deposits of aluminum appear, they are to be rubbed off using a Teflon scouring pad. Slip Tube Assemblies are designed to give long maintenance free service; however, like any product, problems may occur and periodic visual inspections will aid in determining if a potential problem exists and warrants a call to us. Care must be taken to keep debris off of extended tubes. We recommend wiping tubes with light oil (10 weight) or hydraulic oil after use, if tubes appear to have contamination on them. Under no circumstance are tubes to be cleaned with lacquer thinner, or any other solvent.

C. LIMITED WARRANTY, LIMITATIONS, CONDITIONS AND PROCEDURES REQUIRED.

1. Products are warranted to be free of defects in labor and/or materials for a period of ten years from the date of purchase from the Amity and shall be repaired or replaced at the sole option and expense of the Amity provided the products alleged to be defective was used for its intended normal use operation and subject to the following qualifications and limitations.
2. Any alteration of product without consent from Amity is strictly forbidden and shall void warranty.
3. No welding shall be performed on finished product.
4. No responsibility is assumed for any malfunctions or damages which are occasionally caused by foreign objects which may be ingested into water system such as, but not limited to stones, sand or metal chips.
5. Amity assumes responsibility for our product, which is defective only, and therefore, it will not assume responsibility for labor to either remove or install our product unless it agrees in writing to assume such responsibility.
6. Unless otherwise approved in writing by the Amity all returns of defective (or allegedly defective products) are at Purchaser's expense and must include a RGA number issued by the Amity.
7. All warranty claims must be presented at the time the problem occurs, or as soon as practical thereafter, either called or faxed to the Amity and include the numbers on the assembly's Amity's label with a detailed explanation of the difficulty in order for the matter to be appropriately evaluated and resolved.
8. Amity will not be held liable for damage incurred during shipment.
9. No responsibility shall be assumed for misuse or improper mounting, unreasonably use or abuse of the Product and or failure to provide or use improper maintenance, failure to follow written installation and use in instruction or any use other than the customary designed use.

THE REMEDIES PROVIDED IN THE ABOVE EXPRESS LIMITED WARRANTY AND ARE THE SOLE AND EXCLUSIVE REMEDIES AVAILABLE. NO OTHER EXPRESS WARRANTIES ARE MADE. ALL IMPLIED WARRANTIES, INCLUDING BUT NOT LIMITED TO ANY IMPLIED WARRANTY OF MERCHANTABILITY OR

FITNESS FOR A PARTICULAR PURPOSE OR USE ARE LIMITED IN DURATION AS SET FORTH ABOVE. IN NO EVENT SHALL THE AMITY ASSUME OR BE LIABLE FOR ANY INCIDENTAL OR CONSEQUENTIAL DAMAGES.

THE WITHIN DESCRIBED WARRANTY SHALL ONLY BE AFFORDED TO THE ORIGINAL PURCHASER OR FOR INCORPORATION INTO ANOTHER UNIT AND TO FIRST PURCHASER AS PART OF COMPLETED UNIT, HOWEVER, THE WARRANTY PERIOD OF TEN YEARS COMMENCES UPON INSTALLATION INTO FINAL ASSEMBLY WITH THE UNDERSTANDING IT IS INSTALLED WITHIN SIX MONTHS OF PURCHASE.

Dated: _____ ____, 20___

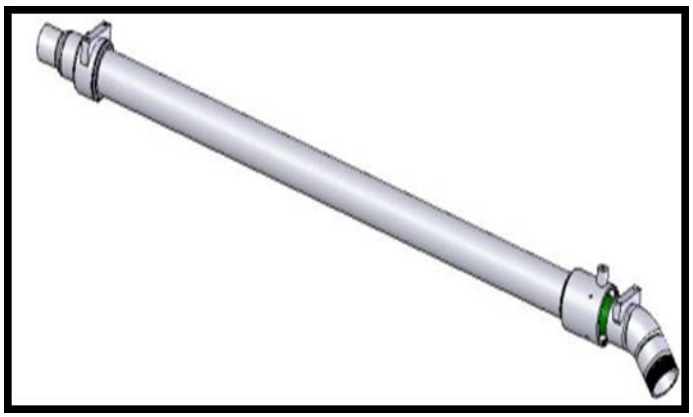

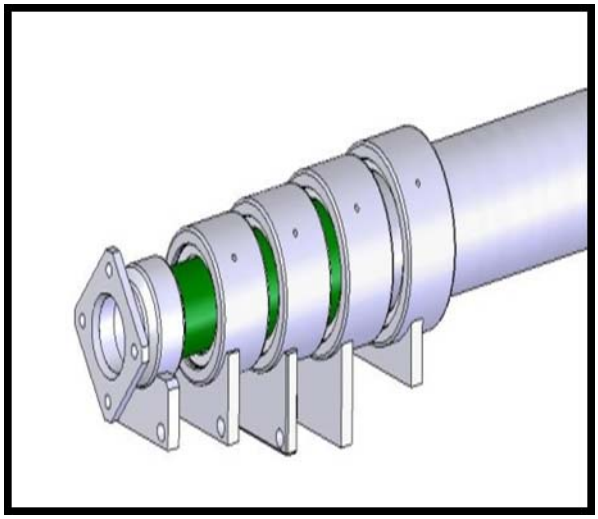

Fire and Rescue Apparatus

Four (4) Year Pro-Rated Paint and Corrosion Aerial Device

Limited Warranty

1. LIMITED WARRANTY

Subject to the limitations and exclusions set forth below, Pierce Manufacturing provides the following warranty to the Buyer:

Coverage:	**Aerial device shall be free from blistering, peeling, corrosion or any other adhesion defect caused by defective manufacturing methods or paint material selection for exterior surfaces.**
Warranty Begins:	**The date of the original purchase invoice (issued when the product ships from the factory).**
Warranty Period Ends After:	**Four (4) Years**
Conditions and Exclusions: **See Also Paragraphs 2 thru 4**	**This limited warranty is applicable to the vehicle in the following percentage costs of warranty repair, if any:** **Topcoat Durability & Appearance: Gloss, Color Retention & Cracking** **0-24 months 100%** **25-48 months 50%** **Integrity of Coating System: Adhesion, Blistering/Bubbling** **0-24 months 100%** **25-48 months 50%** **Corrosion: Dissimilar Metal and Crevice** **0-24 months 100%** **25-48 months 50%** **Corrosion Perforation** **0-24 months 100%** **25-48 months 50%** **This limited warranty applies only to exterior paint.** **Items not covered by this warranty include:** **(a) Damage from lack of maintenance and cleaning (proper cleaning and maintenance procedures are detailed in the Pierce operation and maintenance manual).** **(b) UV paint fade.**

This limited warranty shall apply only if the product is properly maintained in accordance with Pierce's maintenance instructions and manuals and is used in service which is normal to the particular model. Normal service means service which does not subject the product to stresses or impacts greater than normally result from careful use. If the Buyer discovers a defect or nonconformity, it must notify Pierce in writing within thirty (30) days after the date of discovery, but in any event prior to the expiration of the warranty period. THIS LIMITED WARRANTY MAY NOT BE ASSIGNED OR OTHERWISE TRANSFERRED BY THE BUYER TO ANY SUBSEQUENT USER OR PURCHASER OR TO ANY OTHER PERSON OR ENTITY.

Notwithstanding anything to the contrary herein, Pierce makes no warranty whatsoever as to:

(a) any integral parts, components, attachments or trade accessories of or to the product that are not manufactured by Pierce, including but not limited to engines, transmissions, drivelines, axles, water pumps and generators; with respect to all such parts, components, attachments and accessories, Pierce shall assign to Buyer the applicable warranties, if any, made by the respective manufacturers thereof;

(b) any vehicle, chassis, or component, part, attachment or accessory damaged by misuse, neglect, fire, exposure to severe environmental or chemical conditions, acidic environment, improper maintenance, accident, crash, or force majeure such as natural disaster, lightning, earthquake, windstorm, hail, flood, war or riot;

(c) any vehicle, chassis or component, part, attachment or accessory that has been repaired, altered or assembled in any way by any person or entity other than Pierce which, in the sole judgment of Pierce, adversely affects the performance, stability or purpose for which it was manufactured; or

(d) products or parts which may in the ordinary course wear out and have to be replaced during the warranty period, including, but not limited to, tires, fluids, gaskets and light bulbs. Pierce assumes no responsibility for the assembly of its parts or subassemblies into finishing products or vehicles unless the assembly is performed by Pierce.

The original purchaser may void this warranty in part or in its entirety if the product is repaired or replaced (a) without prior written approval of the Pierce Customer Service Department; or (b) at a facility which has not been approved by Pierce as to technical capability. Any repairs, modifications, alterations or aftermarket parts added after manufacture without the authorization of Pierce may void this warranty.

2. DISCLAIMERS OF WARRANTIES

THE WARRANTY SET FORTH IN PARAGRAPH 1 IS THE SOLE AND EXCLUSIVE WARRANTY GIVEN BY PIERCE. PIERCE HEREBY DISCLAIMS AND EXCLUDES ALL OTHER WARRANTIES, WHETHER EXPRESS, IMPLIED OR STATUTORY, INCLUDING WITHOUT LIMITATION ANY WARRANTY OF MERCHANTABILITY, ANY WARRANTY OF FITNESS FOR A PARTICULAR PURPOSE, AND ANY WARRANTIES ARISING FROM COURSE OF DEALING OR USAGE OF TRADE.

3. BUYER'S EXCLUSIVE REMEDY.

If the product fails to conform to the warranty set forth in paragraph 1 during the warranty period, and such nonconformity is not due to misuse, neglect, accident or improper maintenance, Buyer must notify Pierce within the time period specified in paragraph 1, and shall make the product available for inspection by Pierce or its designated agent. At the request of Pierce, any allegedly defective product shall be returned to Pierce by Buyer for examination and/or repair. Buyer shall be responsible for the cost of such transportation, and for risk of loss of or damage to the product during transportation. Within a reasonable time, Pierce shall repair or replace (at Pierce's option and expense) any nonconforming or defective parts. Repair or replacement shall be made only by a facility approved in advance in writing by Pierce. THIS REMEDY SHALL BE THE EXCLUSIVE AND SOLE REMEDY FOR ANY BREACH OF WARRANTY.

4. EXCLUSION OF CONSEQUENTIAL AND INCIDENTAL DAMAGES.

Notwithstanding anything to the contrary herein or in any agreement between Pierce and Buyer, IN NO EVENT SHALL PIERCE BE LIABLE FOR ANY CONSEQUENTIAL, INCIDENTAL, SPECIAL, INDIRECT, OR PUNITIVE DAMAGES WHATSOEVER, WHETHER ARISING OUT OF BREACH OF CONTRACT, WARRANTY, TORT (INCLUDING NEGLIGENCE AND STRICT LIABILITY) OR OTHER THEORY OF LAW OR EQUITY, WITH RESPECT TO VEHICLES OR OTHER PRODUCTS SOLD BY PIERCE, OR THEIR OPERATION OR FAILURE TO OPERATE, OR ANY DEFECTS THEREIN, OR ANY UNDERTAKINGS, ACTS OR OMISSIONS RELATED THERETO, REGARDLESS OF WHETHER PIERCE HAS BEEN INFORMED OF THE POSSIBILITY OF ANY SUCH DAMAGES. Without limiting the generality of the foregoing, Pierce specifically disclaims any liability for property or personal injury damages, penalties, damages for lost profits or revenues, loss of vehicles or products or any associated equipment, cost of substitute vehicles or products, down-time, delay damages, any other types of economic loss, or for any claims by any third party for any such damages.

Note: Any Surety Bond, if a part of the sale of the vehicle as to which this limited warranty is provided, applies only to this Pierce Basic One Year Limited Warranty for such vehicle, and not to other warranties made by Pierce in a separate document (if any) or to the warranties (if any) made by any manufacturer (other than Pierce) of any part, component, attachment or accessory that is incorporated into or attached to the vehicle.

Fire and Rescue Apparatus

Ten (10) Year Pro-Rated Paint and Corrosion Custom Body

Limited Warranty

1. LIMITED WARRANTY

Subject to the limitations and exclusions set forth below, Pierce Manufacturing provides the following warranty to the Buyer:

Coverage:	**Exterior surfaces of the body shall be free from blistering, peeling, corrosion or any other adhesion defect caused by defective manufacturing methods or paint material selection.**
Warranty Begins:	**The date of the original purchase invoice (issued when the product ships from the factory).**
Warranty Period Ends After:	**Ten (10) Years**
Conditions and Exclusions: **See Also Paragraphs 2 thru 4**	**This limited warranty is applicable to the vehicle in the following percentage costs of warranty repair, if any:** **Topcoat Durability & Appearance: Gloss, Color Retention & Cracking** **0-72 months 100%** **73-96 months 50%** **97-120 months 25%** **Integrity of Coating System: Adhesion, Blistering/Bubbling** **0-36 months 100%** **37-84 months 50%** **85-120 months 25%** **Corrosion: Dissimilar Metal and Crevice** **0-36 months 100%** **37-48 months 50%** **49-72 months 25%** **73-120 months 10%** **Corrosion Perforation** **0-120 months 100%** **This limited warranty applies only to exterior paint. Paint on the vehicle's interior is warranted only under the Pierce Basic One Year Limited Warranty.** **Items not covered by this warranty include:** **(a) Damage from lack of maintenance and cleaning (proper cleaning and maintenance procedures are detailed in the Pierce operation and maintenance manual).** **(b) UV paint fade.** **(c) Any cab not manufactured by Pierce.**

This limited warranty shall apply only if the product is properly maintained in accordance with Pierce's maintenance instructions and manuals and is used in service which is normal to the particular model. Normal service means service which does not subject the product to stresses or impacts greater than normally result from careful use. If the Buyer discovers a defect or nonconformity, it must notify Pierce in writing within thirty (30) days after the date of discovery, but in any event prior to the expiration of the warranty period. THIS LIMITED WARRANTY MAY NOT BE ASSIGNED OR OTHERWISE TRANSFERRED BY THE BUYER TO ANY SUBSEQUENT USER OR PURCHASER OR TO ANY OTHER PERSON OR ENTITY.

Notwithstanding anything to the contrary herein, Pierce makes no warranty whatsoever as to:

(a) any integral parts, components, attachments or trade accessories of or to the product that are not manufactured by Pierce, including but not limited to engines, transmissions, drivelines, axles, water pumps and generators; with respect to all such parts, components, attachments and accessories, Pierce shall assign to Buyer the applicable warranties, if any, made by the respective manufacturers thereof;

(b) any vehicle, chassis, or component, part, attachment or accessory damaged by misuse, neglect, fire, exposure to severe environmental or chemical conditions, acidic environment, improper maintenance, accident, crash, or force majeure such as natural disaster, lightning, earthquake, windstorm, hail, flood, war or riot;

(c) any vehicle, chassis or component, part, attachment or accessory that has been repaired, altered or assembled in any way by any person or entity other than Pierce which, in the sole judgment of Pierce, adversely affects the performance, stability or purpose for which it was manufactured; or

(d) products or parts which may in the ordinary course wear out and have to be replaced during the warranty period, including, but not limited to, tires, fluids, gaskets and light bulbs. Pierce assumes no responsibility for the assembly of its parts or subassemblies into finishing products or vehicles unless the assembly is performed by Pierce.

The original purchaser may void this warranty in part or in its entirety if the product is repaired or replaced (a) without prior written approval of the Pierce Customer Service Department; or (b) at a facility which has not been approved by Pierce as to technical capability. Any repairs, modifications, alterations or aftermarket parts added after manufacture without the authorization of Pierce may void this warranty.

2. DISCLAIMERS OF WARRANTIES

THE WARRANTY SET FORTH IN PARAGRAPH 1 IS THE SOLE AND EXCLUSIVE WARRANTY GIVEN BY PIERCE. PIERCE HEREBY DISCLAIMS AND EXCLUDES ALL OTHER WARRANTIES, WHETHER EXPRESS, IMPLIED OR STATUTORY, INCLUDING WITHOUT LIMITATION ANY WARRANTY OF MERCHANTABILITY, ANY WARRANTY OF FITNESS FOR A PARTICULAR PURPOSE, AND ANY WARRANTIES ARISING FROM COURSE OF DEALING OR USAGE OF TRADE.

3. BUYER'S EXCLUSIVE REMEDY.

If the product fails to conform to the warranty set forth in paragraph 1 during the warranty period, and such nonconformity is not due to misuse, neglect, accident or improper maintenance, Buyer must notify Pierce within the time period specified in paragraph 1, and shall make the product available for inspection by Pierce or its designated agent. At the request of Pierce, any allegedly defective product shall be returned to Pierce by Buyer for examination and/or repair. Buyer shall be responsible for the cost of such transportation, and for risk of loss of or damage to the product during transportation. Within a reasonable time, Pierce shall repair or replace (at Pierce's option and expense) any nonconforming or defective parts. Repair or replacement shall be made only by a facility approved in advance in writing by Pierce. THIS REMEDY SHALL BE THE EXCLUSIVE AND SOLE REMEDY FOR ANY BREACH OF WARRANTY.

4. EXCLUSION OF CONSEQUENTIAL AND INCIDENTAL DAMAGES.

Notwithstanding anything to the contrary herein or in any agreement between Pierce and Buyer, IN NO EVENT SHALL PIERCE BE LIABLE FOR ANY CONSEQUENTIAL, INCIDENTAL, SPECIAL, INDIRECT, OR PUNITIVE DAMAGES WHATSOEVER, WHETHER ARISING OUT OF BREACH OF CONTRACT, WARRANTY, TORT (INCLUDING NEGLIGENCE AND STRICT LIABILITY) OR OTHER THEORY OF LAW OR EQUITY, WITH RESPECT TO VEHICLES OR OTHER PRODUCTS SOLD BY PIERCE, OR THEIR OPERATION OR FAILURE TO OPERATE, OR ANY DEFECTS THEREIN, OR ANY UNDERTAKINGS, ACTS OR OMISSIONS RELATED THERETO, REGARDLESS OF WHETHER PIERCE HAS BEEN INFORMED OF THE POSSIBILITY OF ANY SUCH DAMAGES. Without limiting the generality of the foregoing, Pierce specifically disclaims any liability for property or personal injury damages, penalties, damages for lost profits or revenues, loss of vehicles or products or any associated equipment, cost of substitute vehicles or products, down-time, delay damages, any other types of economic loss, or for any claims by any third party for any such damages.

Note: Any Surety Bond, if a part of the sale of the vehicle as to which this limited warranty is provided, applies only to this Pierce Basic One Year Limited Warranty for such vehicle, and not to other warranties made by Pierce in a separate document (if any) or to the warranties (if any) made by any manufacturer (other than Pierce) of any part, component, attachment or accessory that is incorporated into or attached to the vehicle.

Fire and Rescue Apparatus

Three (3) Year Material and Workmanship
Goldstar® Gold Leaf Lamination

Limited Warranty

1. LIMITED WARRANTY

Subject to the limitations and exclusions set forth below, Pierce Manufacturing provides the following warranty to the Buyer:

Coverage:	**Each Goldstar® gold leaf lamination shall be free from defects in material and workmanship.**
Warranty Begins:	**The date of the original purchase invoice (issued when the product ships from the factory).**
Warranty Period Ends After:	**Three (3) Years**
Conditions and Exclusions: **See Also Paragraphs 2 thru 4**	**This warranty does not cover damage from lack of maintenance and cleaning (proper cleaning and maintenance procedures are detailed in the Pierce operation and maintenance manual).**

This limited warranty shall apply only if the product is properly maintained in accordance with Pierce's maintenance instructions and manuals and is used in service which is normal to the particular model. Normal service means service which does not subject the product to stresses or impacts greater than normally result from careful use. If the Buyer discovers a defect or nonconformity, it must notify Pierce in writing within thirty (30) days after the date of discovery, but in any event prior to the expiration of the warranty period. THIS LIMITED WARRANTY MAY NOT BE ASSIGNED OR OTHERWISE TRANSFERRED BY THE BUYER TO ANY SUBSEQUENT USER OR PURCHASER OR TO ANY OTHER PERSON OR ENTITY.

Notwithstanding anything to the contrary herein, Pierce makes no warranty whatsoever as to:

(a) any integral parts, components, attachments or trade accessories of or to the product that are not manufactured by Pierce, including but not limited to engines, transmissions, drivelines, axles, water pumps and generators; with respect to all such parts, components, attachments and accessories, Pierce shall assign to Buyer the applicable warranties, if any, made by the respective manufacturers thereof;

(b) any vehicle, chassis, or component, part, attachment or accessory damaged by misuse, neglect, fire, exposure to severe environmental or chemical conditions, acidic environment, improper maintenance, accident, crash, or force majeure such as natural disaster, lightning, earthquake, windstorm, hail, flood, war or riot;

(c) any vehicle, chassis or component, part, attachment or accessory that has been repaired, altered or assembled in any way by any person or entity other than Pierce which, in the sole judgment of Pierce, adversely affects the performance, stability or purpose for which it was manufactured; or

(d) products or parts which may in the ordinary course wear out and have to be replaced during the warranty period, including, but not limited to, tires, fluids, gaskets and light bulbs. Pierce assumes no responsibility for the assembly of its parts or subassemblies into finishing products or vehicles unless the assembly is performed by Pierce.

The original purchaser may void this warranty in part or in its entirety if the product is repaired or replaced (a) without prior written approval of the Pierce Customer Service Department; or (b) at a facility which has not been approved by Pierce as to technical capability. Any repairs, modifications, alterations or aftermarket parts added after manufacture without the authorization of Pierce may void this warranty.

2. DISCLAIMERS OF WARRANTIES

THE WARRANTY SET FORTH IN PARAGRAPH 1 IS THE SOLE AND EXCLUSIVE WARRANTY GIVEN BY PIERCE. PIERCE HEREBY DISCLAIMS AND EXCLUDES ALL OTHER WARRANTIES, WHETHER EXPRESS, IMPLIED OR STATUTORY, INCLUDING WITHOUT LIMITATION ANY WARRANTY OF MERCHANTABILITY, ANY WARRANTY OF FITNESS FOR A PARTICULAR PURPOSE, AND ANY WARRANTIES ARISING FROM COURSE OF DEALING OR USAGE OF TRADE.

3. BUYER'S EXCLUSIVE REMEDY.

If the product fails to conform to the warranty set forth in paragraph 1 during the warranty period, and such nonconformity is not due to misuse, neglect, accident or improper maintenance, Buyer must notify Pierce within the time period specified in paragraph 1, and shall make the product available for inspection by Pierce or its designated agent. At the request of Pierce, any allegedly defective product shall be returned to Pierce by Buyer for examination and/or repair. Buyer shall be responsible for the cost of such transportation, and for risk of loss of or damage to the product during transportation. Within a reasonable time, Pierce shall repair or replace (at Pierce's option and expense) any nonconforming or defective parts. Repair or replacement shall be made only by a facility approved in advance in writing by Pierce. THIS REMEDY SHALL BE THE EXCLUSIVE AND SOLE REMEDY FOR ANY BREACH OF WARRANTY.

4. EXCLUSION OF CONSEQUENTIAL AND INCIDENTAL DAMAGES.

Notwithstanding anything to the contrary herein or in any agreement between Pierce and Buyer, IN NO EVENT SHALL PIERCE BE LIABLE FOR ANY CONSEQUENTIAL, INCIDENTAL, SPECIAL, INDIRECT, OR PUNITIVE DAMAGES WHATSOEVER, WHETHER ARISING OUT OF BREACH OF CONTRACT, WARRANTY, TORT (INCLUDING NEGLIGENCE AND STRICT LIABILITY) OR OTHER THEORY OF LAW OR EQUITY, WITH RESPECT TO VEHICLES OR OTHER PRODUCTS SOLD BY PIERCE, OR THEIR OPERATION OR FAILURE TO OPERATE, OR ANY DEFECTS THEREIN, OR ANY UNDERTAKINGS, ACTS OR OMISSIONS RELATED THERETO, REGARDLESS OF WHETHER PIERCE HAS BEEN INFORMED OF THE POSSIBILITY OF ANY SUCH DAMAGES. Without limiting the generality of the foregoing, Pierce specifically disclaims any liability for property or personal injury damages, penalties, damages for lost profits or revenues, loss of vehicles or products or any associated equipment, cost of substitute vehicles or products, down-time, delay damages, any other types of economic loss, or for any claims by any third party for any such damages.

Note: Any Surety Bond, if a part of the sale of the vehicle as to which this limited warranty is provided, applies only to this Pierce Basic One Year Limited Warranty for such vehicle, and not to other warranties made by Pierce in a separate document (if any) or to the warranties (if any) made by any manufacturer (other than Pierce) of any part, component, attachment or accessory that is incorporated into or attached to the vehicle.

Certification Document CD0156
Statement of Compliance to NFPA 1901-2016
Vehicle Stability

Pierce fire apparatus comply with NFPA 1901 Section 4.13 Vehicle Stability using the tilt table method. As prescribed by the standard, each apparatus is compared to a substantially similar apparatus that has been loaded as required and tested on a tilt table per the SAE J2180 test procedure. If the apparatus configuration was not expected to meet the minimum tilt table criteria, then it will be equipped with the Electronic Stability Control option. A listing of all tested apparatus is maintained by the Research and Development lab and is available for inspection at the Appleton factory.





4.13 Vehicle Stability.

4.13.1* Rollover Stability. The apparatus shall meet the criteria defined in 4.13.1.1, or it shall be equipped with a stability control system in accordance with 4.13.1.2.

4.13.1.1 The apparatus shall meet the criteria defined in either of the following:

(1)*The apparatus shall remain stable to 26.5 degrees in both directions when tested on a tilt table in accordance with SAE J2180, *A Tilt Table Procedure for Measuring the Static Rollover Threshold for Heavy Trucks.*

(2) The calculated or measured center of gravity (CG) shall be no higher than 80 percent of the rear axle track width.

4.13.1.1.1 Compliance shall be certified by testing, calculating, or measuring the apparatus or by comparing the apparatus to a compliant, substantially similar example apparatus, and the certification shall be delivered with the fire apparatus.

4.13.1.1.2 The example apparatus shall be considered substantially similar if it includes a chassis with the same or higher CG height, the same or narrower rear axle track width, the same or greater water tank size and CG height, the same type of front and rear suspension, and the same type and size of aerial device.

4.13.1.1.3 For purposes of 4.13.1.1, the apparatus shall be loaded with fuel, fire-fighting agents, hose, ladders, a weight of 250 lb in each seating position, and weight equivalent to the miscellaneous equipment allowance as defined in Table 12.1.2.

4.13.1.1.3.1 If the apparatus is designed to meet a specified higher equipment loading or larger hose bed capacity or to carry additional ground ladders, these greater loads shall be included in the testing, calculating, or measuring.

4.13.1.1.3.2 The weight added to the fire apparatus for the purpose of test, calculation, or measurement shall be distributed to approximate typical in-service use of the fire apparatus while not exceeding the manufacturer's published individual compartment weight ratings.

4.13.1.2 If the apparatus is equipped with a stability control system, the system shall have, at a minimum, a steering wheel position sensor, a vehicle yaw sensor, a lateral accelerometer, and individual wheel brake controls.

VALIDATION TEST: Multiple Tests

Pierce Manufacturing, Inc.

David W. Archer
Vice President of Engineering
June 1, 2017

Certification Document CD0155
Engine Installation – Enforcer GHG17 Cummins L9 Engine

Pierce Manufacturing, Inc. certifies that the GHG17 Cummins L9 Engine as installed in an Enforcer chassis meets the engine installation requirements of the engine manufacturer, the NFPA 1901 and NFPA 1906 guidelines as applicable, and Pierce engine design standards.

Validation testing was conducted in the Pierce wind tunnel chassis dynamometer and cooling test laboratory. Test results have been reviewed and accepted by representatives of the engine supplier.





Pierce Manufacturing, Inc.

David W. Archer
Vice President of Engineering
June 5, 2017

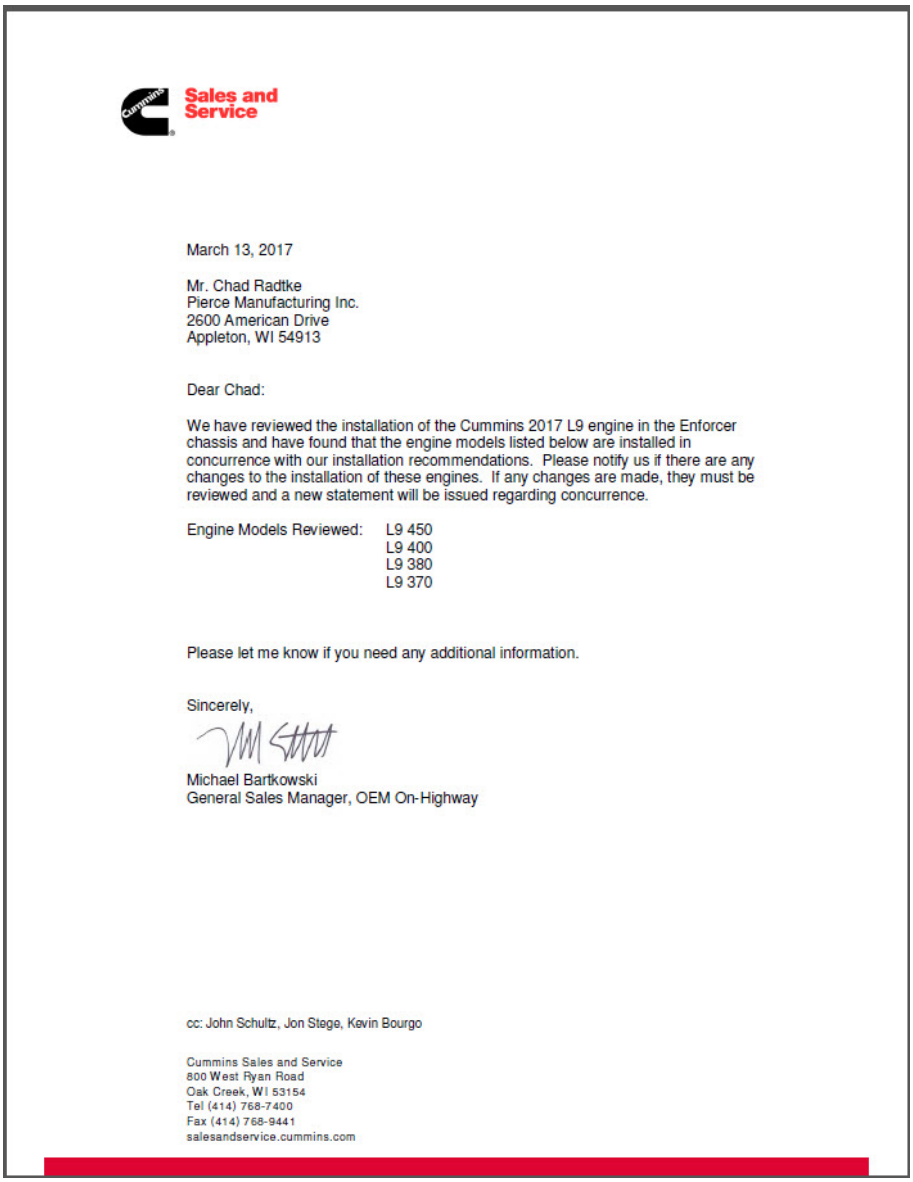

Sales and Service

March 13, 2017

Mr. Chad Radtke
Pierce Manufacturing Inc.
2600 American Drive
Appleton, WI 54913

Dear Chad:

We have reviewed the installation of the Cummins 2017 L9 engine in the Enforcer chassis and have found that the engine models listed below are installed in concurrence with our installation recommendations. Please notify us if there are any changes to the installation of these engines. If any changes are made, they must be reviewed and a new statement will be issued regarding concurrence.

Engine Models Reviewed: L9 450
L9 400
L9 380
L9 370

Please let me know if you need any additional information.

Sincerely,

Michael Bartkowski
General Sales Manager, OEM On-Highway

cc: John Schultz, Jon Stege, Kevin Bourgo

Cummins Sales and Service
800 West Ryan Road
Oak Creek, WI 53154
Tel (414) 768-7400
Fax (414) 768-9441
salesandservice.cummins.com

Certification Document CD0158
Engine Installation – Saber FR GHG17 Cummins L9 Engine

Pierce Manufacturing, Inc. certifies that the GHG17 Cummins L9 Engine as installed in a Saber FR chassis meets the engine installation requirements of the engine manufacturer, the NFPA 1901 and NFPA 1906 guidelines as applicable, and Pierce engine design standards.

Validation testing was conducted in the Pierce wind tunnel chassis dynamometer and cooling test laboratory. Test results have been reviewed and accepted by representatives of the engine supplier.





Pierce Manufacturing, Inc.

David W. Archer
Vice President of Engineering
June 5, 2017

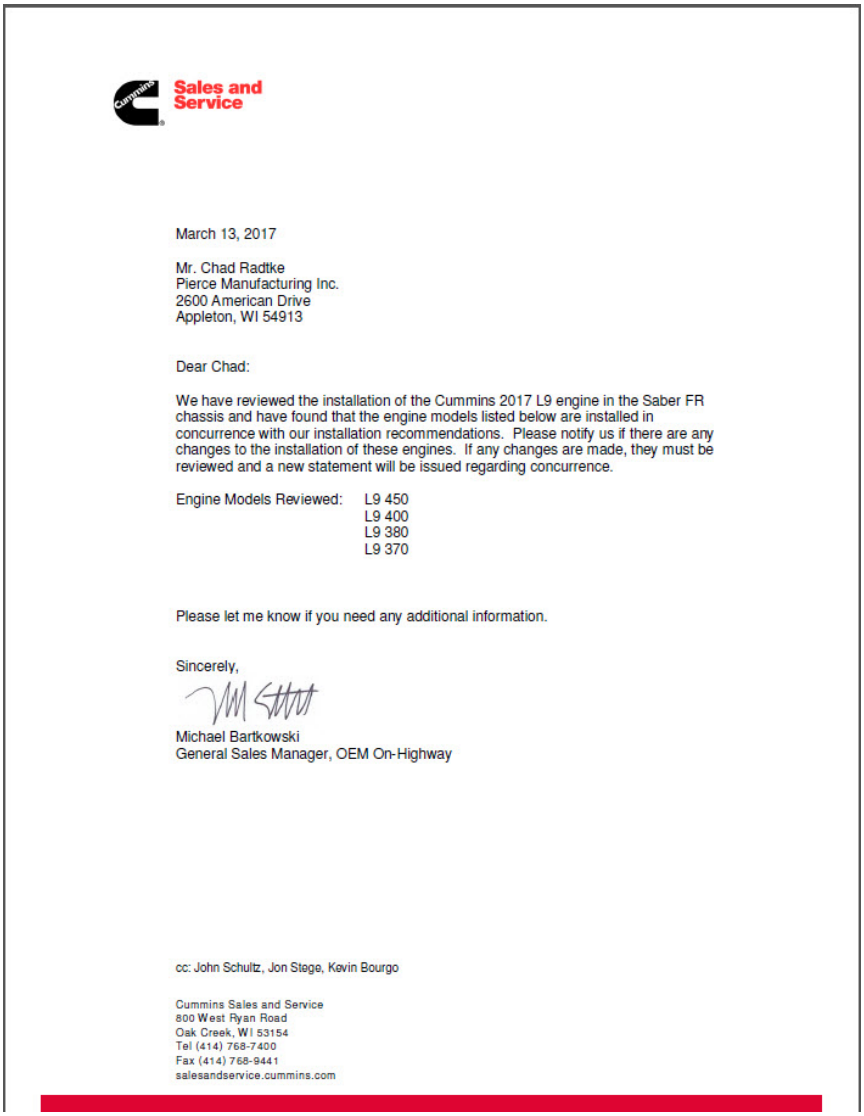

Sales and Service

March 13, 2017

Mr. Chad Radtke
Pierce Manufacturing Inc.
2600 American Drive
Appleton, WI 54913

Dear Chad:

We have reviewed the installation of the Cummins 2017 L9 engine in the Saber FR chassis and have found that the engine models listed below are installed in concurrence with our installation recommendations. Please notify us if there are any changes to the installation of these engines. If any changes are made, they must be reviewed and a new statement will be issued regarding concurrence.

Engine Models Reviewed: L9 450
L9 400
L9 380
L9 370

Please let me know if you need any additional information.

Sincerely,

Michael Bartkowski
General Sales Manager, OEM On-Highway

cc: John Schultz, Jon Stege, Kevin Bourgo

Cummins Sales and Service
800 West Ryan Road
Oak Creek, WI 53154
Tel (414) 768-7400
Fax (414) 768-9441
salesandservice.cummins.com

Certification Document CD0098
Power Steering System

Pierce Manufacturing, Inc. certifies that the power steering system as installed in our custom chassis meets the requirements of the component supplier, the NFPA 1901 and NFPA 1906 guidelines as applicable, and Pierce internal design standards.

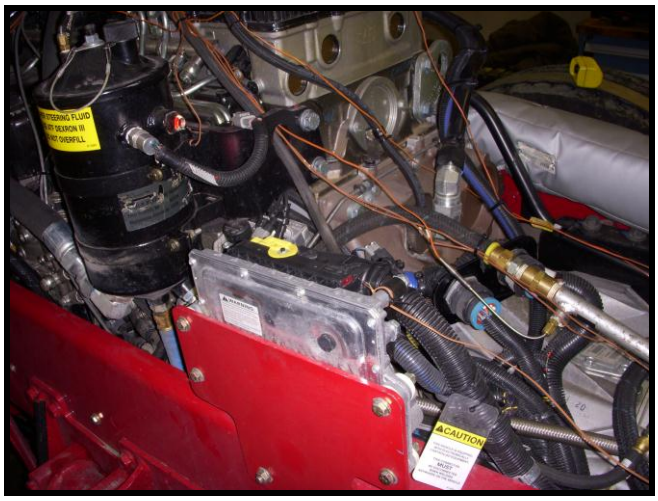

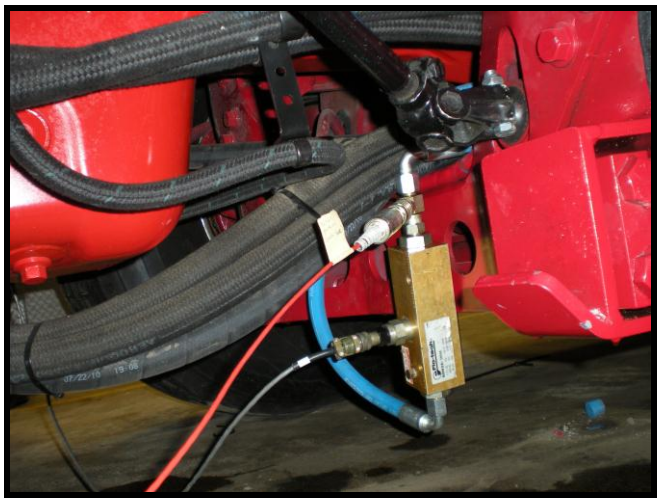

VALIDATION TEST: RD1987, RD2055
RD2056, RD2057, RD2058, RD2059

Pierce Manufacturing, Inc.

David W. Archer
Director of Engineering
June 03, 2011

PIERCE MANUFACTURING INC.®

AN OSHKOSH TRUCK CORPORATION® COMPANY

Certification Document CD0130
Saber® FR - Enforcer™
Cab Integrity Certification

Pierce Manufacturing certifies the integrity of the Saber® FR – Enforcer™ cab relative to occupant protection.

A specimen representing the substantial structural configuration of the Saber® FR – Enforcer™ cab models has been successfully tested in accordance with the following standards.

- SAE J2422 Cab Roof Strength Evaluation – Quasi-Static Loading Heavy Trucks.
- European Occupant Protection Standard ECE Regulation No. 29.
- SAE J2420 COE Frontal Strength Evaluation – Dynamic Loading Heavy Trucks.

Side Impact: The test cab was subjected to dynamic preload where a 14,253 lb moving barrier was slammed into the side of the cab at 5.25 mph, striking with an impact of 13,000 ft-lbs of energy. This test is not required to meet the ECE 29 standard, but is part of the SAE J2422 test procedure and more closely represents the forces a cab will see in a roll-over incident.



Frontal Impact: The test cab was struck by the 14,253 lb moving barrier at a speed sufficient to impart the required 32,549 ft-lbs of energy.



Roof Crush: This same test cab was then subjected to a roof crush force of 24,453 lbs. This value meets the ECE 29 criteria, which must be equivalent to the front axle rating up to a maximum of 10 metric tons.



Pass-Fail criteria of the SAE tests and the ECE 29 test is a measure of whether the “survival space” inside the cab is compromised, all doors remain shut, and the cab remained attached to the chassis frame in at least one location. The Pierce cab met all of the Performance Criteria requirements on all 3 integrity tests.

Witnessed and Certified by:

Pierce Manufacturing, Inc.

David Archer
Vice President of Engineering

PIERCE MANUFACTURING INC.®

AN OSHKOSH CORPORATION® COMPANY

Certification Document CD0137
Saber®FR – Enforcer™
Cab Doors

Pierce Manufacturing certifies the integrity of the Saber®FR – Enforcer™ cab doors.

Specimens representing the substantial structural configuration of the Saber®FR – Enforcer™ cab front and crew doors have been successfully tested to meet the following objectives:

OBJECTIVES:

- Survive a 200,000-cycle door slam test with a slam acceleration up to 20 g's on one representative
- Validate the assembly concept of the main structure of the door by evaluating the durability of the bonding technique.
- Evaluate components, structure, and mounting of the door during and the end of the test for fatigue and failure to ensure durability.
- Verify that the door seals function properly at the end of the test.
- Evaluate the new extrusions and castings of the cab doorframe during and at the end of the test for fatigue, failure, and deformation of seal flanges.
- Evaluate various mounting options for the electronic control module for durability during portions of the slam test.

CONCLUSIONS:

- The door structure and doorframe successfully completed a 200,000-cycle door slam test with a door slam acceleration of 20 g's.

VALIDATION TEST: RD2425

Pierce Manufacturing, Inc.



David Archer
November 18, 2014

Certification Document CD0132
Saber®FR – Enforcer™
Windshield Wiper System

Pierce Manufacturing certifies the integrity of the Saber® FR –Enforcer™ Windshield Wiper System.

Specimens representing the configuration of the Saber® FR –Enforcer™ windshield wipers have been successfully tested to meet the following objectives:

OBJECTIVES:

- Complete 3,000,000 cycles of windshield wiper operation per SAE J198 § 6.2
- Inspect wiper motor, pivots, linkages, and mounts frequently to validate cumulative wiper system integrity.

CONCLUSIONS:

- The wiper linkage, pivots, and mounts successfully completed the 3,000,000 cycles.

VALIDATION TEST: RD2462



Pierce Manufacturing, Inc.

David Archer
Vice President of Engineering

Certification Document CD0133
Saber® FR – Enforcer™
Window Regulators

Pierce Manufacturing certifies the integrity of the Saber ®FR – Enforcer™ window regulators.

Specimens representing the substantial structural configuration of the Saber®FR – Enforcer™ window regulators have been successfully tested to meet the following objectives:

OBJECTIVES:

- Electric window regulators withstand 30,000 up-down cycles.

CONCLUSIONS:

- The electric window regulators withstood 30,000 cycles without failure.

VALIDATION TEST: RD2425



Pierce Manufacturing, Inc.

David Archer
Vice President of Engineering

Certification Document CD0134
Saber® FR – Enforcer™
Seats and Seat Belts

Pierce Manufacturing certifies the conformance of the Saber® FR – Enforcer™ cab seats and seat belts to Federal Motor Vehicle Safety Standards. Representative Saber® FR – Enforcer™ Seat and Seat Belt designs have been tested successfully in accordance with FMVSS 207.

Physical testing was performed to qualify passenger seats to meet Federal Motor Vehicle Safety Standards (FMVSS) 207 and 210. This requires that a minimum of 3,000 lbf be applied to both the lap and shoulder belts via appropriate body blocks. A third force of twenty times the mass of the seat must be applied at the center-of-gravity (CG) of the seat. All three forces are applied at the same time, reached within thirty seconds of the start of the test, and be held for a minimum of ten seconds.

A force equal to twenty times the mass of the seat was applied to each seat in the direction opposite to the combination pull. A moment of 275 lb-ft was applied to the seat with reference to the H-point.

This testing ensures that the seat mounting and seat belt anchors are adequate to retain the seats and occupants in a crash. The Federal requirements are based on the high deceleration rates of passenger vehicles, so the design requirements are significantly more conservative considering the slower crash speeds of heavy trucks.

VALIDATION TESTS: RD2397

Pierce Manufacturing, Inc.



David Archer
Vice President of Engineering

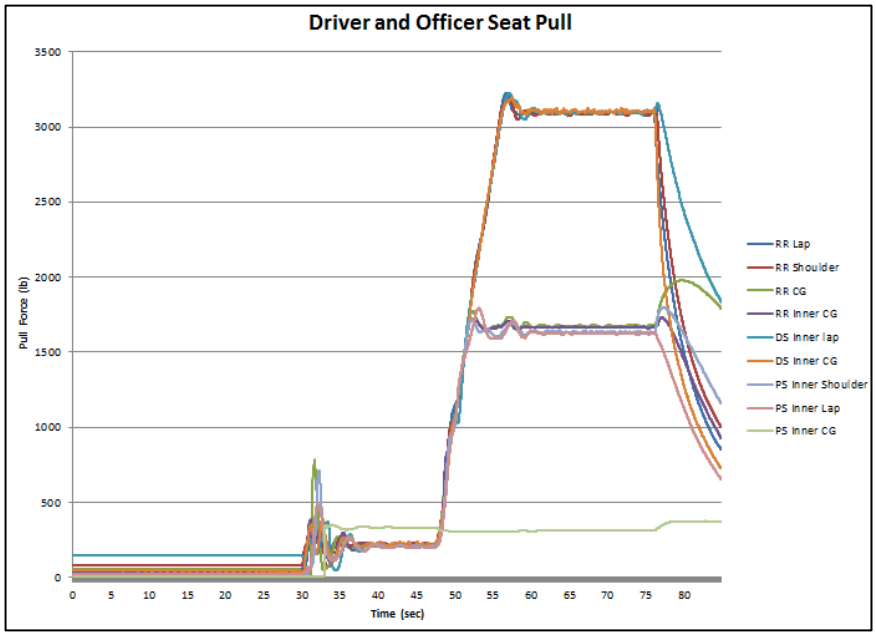

PIERCE MANUFACTURING INC.®

AN OSHKOSH CORPORATION® COMPANY

Certification Document CD0165
Saber® FR – Enforcer™
Cab Heater

Pierce Manufacturing certifies the performance of the Saber® FR – Enforcer™ cab heat systems.

The Saber®FR - Enforcer™ Heater System was tested successfully in an environmental chamber.

Heater testing was performed using the coolant supply procedures from SAE J381. The average cab temperature increased 82.3º F from -10º F to 72.3º F within the prescribed 30 minutes utilizing the right side under seat auxiliary heater. The cab was contained in a cold chamber at -10º F during the duration of the test.

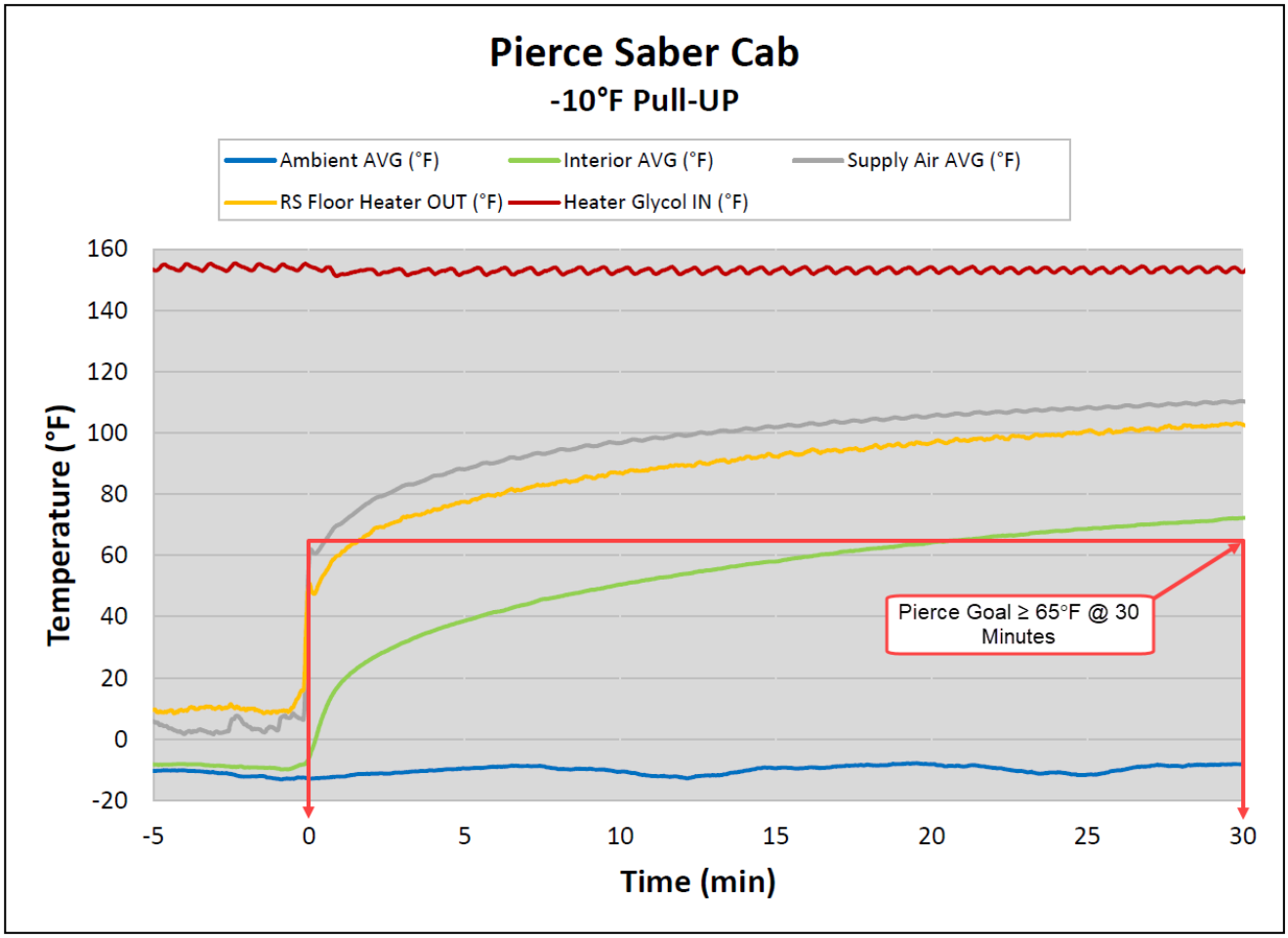

VALIDATION TEST: TR#19-0047 R00

Pierce Manufacturing, Inc.



David Archer
Vice President of Engineering

PIERCE MANUFACTURING INC.®

AN OSHKOSH CORPORATION® COMPANY

Certification Document CD0167
Saber® FR - Enforcer™
Air Conditioning & Defrost

Pierce Manufacturing certifies the performance of the Saber®FR - Enforcer™ cab air conditioning and defrost system.

The air conditioning and defrost system was tested successfully in an environmental chamber.

Air Conditioning:
Air conditioning performance testing was conducted at an ambient of 100°F and 50 percent relative humidity. The engine speed was maintained at 1000 RPM with the QP21 compressor

The vehicle was heat soaked in the environmental chamber. All temperature probes were monitored to confirm temperature stabilization. The transient test began when all the vehicle doors were closed, and the air conditioning turned on.

The average cab temperature dropped to a maximum of 72.1°F within 30 minutes.

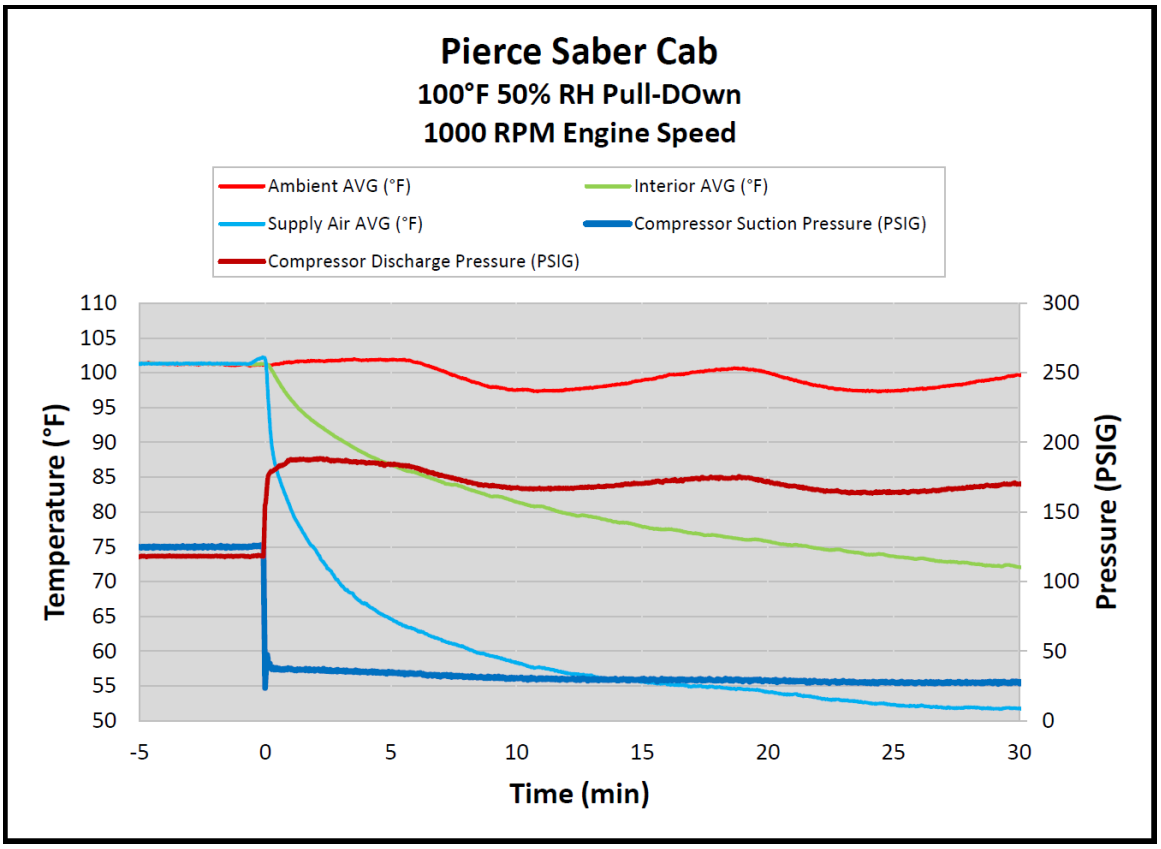

Defrosting

Defroster testing was performed in accordance with *SAE J381 Windshield Defrosting Systems Test Procedure and Performance Requirements-Trucks, Buses, and Multipurpose Vehicles.*

This SAE Recommended Practice establishes uniform test procedures and performance requirements for the defrosting system of enclosed cab trucks, buses, and multipurpose vehicles. Current engineering practice prescribes that for laboratory evaluation of defroster systems, an ice coating of known thickness be applied to the windshield and left- and right-hand side windows to provide more uniform and repeatable test results, even though under actual conditions such a coating would necessarily be scraped off before driving. The test condition, therefore, represents a more severe condition than the actual condition, where the defroster system must merely be capable of maintaining a cleared viewing area.

During the test, the vehicle is cold soaked to 0º F in a cold chamber. A prescribed layer of ice is applied to the windshield. The defroster is then run, and the advancing melt boundary marked as the test proceeds.

The SAE prescribed area of the windshield was 100% cleared and the side windows were 75% cleared within the specified 30-minute period.

Defrost Results



Start of Test



15 Minutes



30 Minutes



Right Viewed From Outside Left

VALIDATION TEST: MCC Test Report TR#19-0047 R00

Pierce Manufacturing, Inc.



David W. Archer
Vice President of Engineering

PIERCE MANUFACTURING INC.®

AN OSHKOSH CORPORATION® COMPANY

Certification Document CD0174
Saber® FR – Enforcer™
Cab Heater

Pierce Manufacturing, in conjunction with Mobile Climate Control, Inc., certifies the performance of the Saber® FR – Enforcer™ cab heat systems.

The Saber®FR - Enforcer™ Heater System was tested successfully in an environmental chamber.

Heater testing was performed using the coolant supply procedures from SAE J381. The average cab temperature increased 82.3º F from -10º F to 72.3º F within the prescribed 30 minutes utilizing the right side under seat auxiliary heater. The cab was contained in a cold chamber at -10º F during the duration of the test.

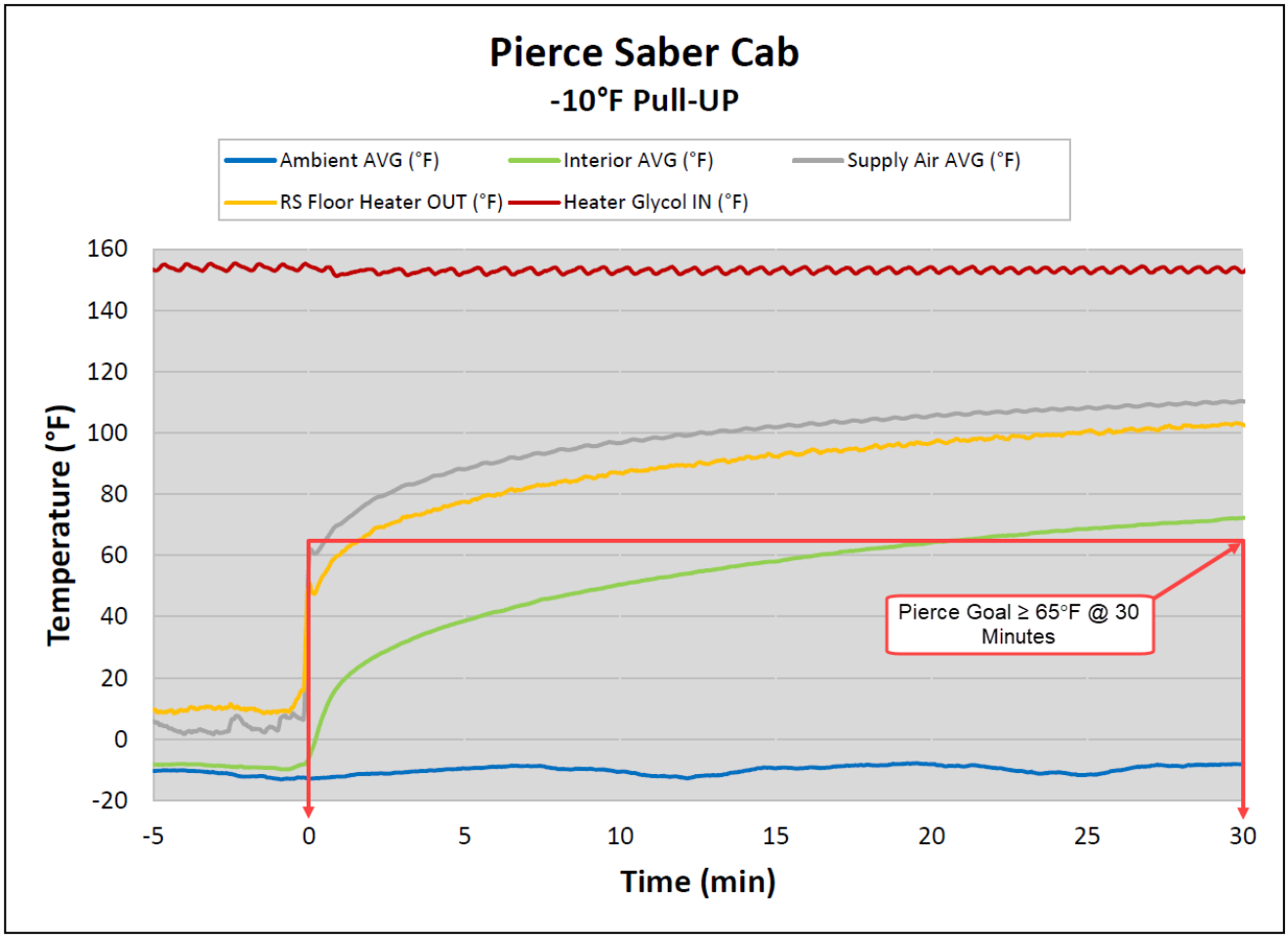

VALIDATION TEST: TR#19-0047 R00

Pierce Manufacturing, Inc.



David Archer
Vice President of Engineering

Mobile Climate Control, Inc.



Brent Griffith
Lead Test Engineer & Large Application Specialist

PIERCE MANUFACTURING INC.®

AN OSHKOSH CORPORATION® COMPANY

Certification Document CD0175
Saber® FR - Enforcer™
Air Conditioning & Defrost

Pierce Manufacturing, in conjunction with Mobile Climate Control, Inc., certifies the performance of the Saber®FR - Enforcer™ cab air conditioning and defrost system.

The air conditioning and defrost system was tested successfully in an environmental chamber.

Air Conditioning:
Air conditioning performance testing was conducted at an ambient of 100°F and 50 percent relative humidity. The engine speed was maintained at 1000 RPM with the QP21 compressor

The vehicle was heat soaked in the environmental chamber. All temperature probes were monitored to confirm temperature stabilization. The transient test began when all the vehicle doors were closed, and the air conditioning turned on.

The average cab temperature dropped to a maximum of 72.1°F within 30 minutes.

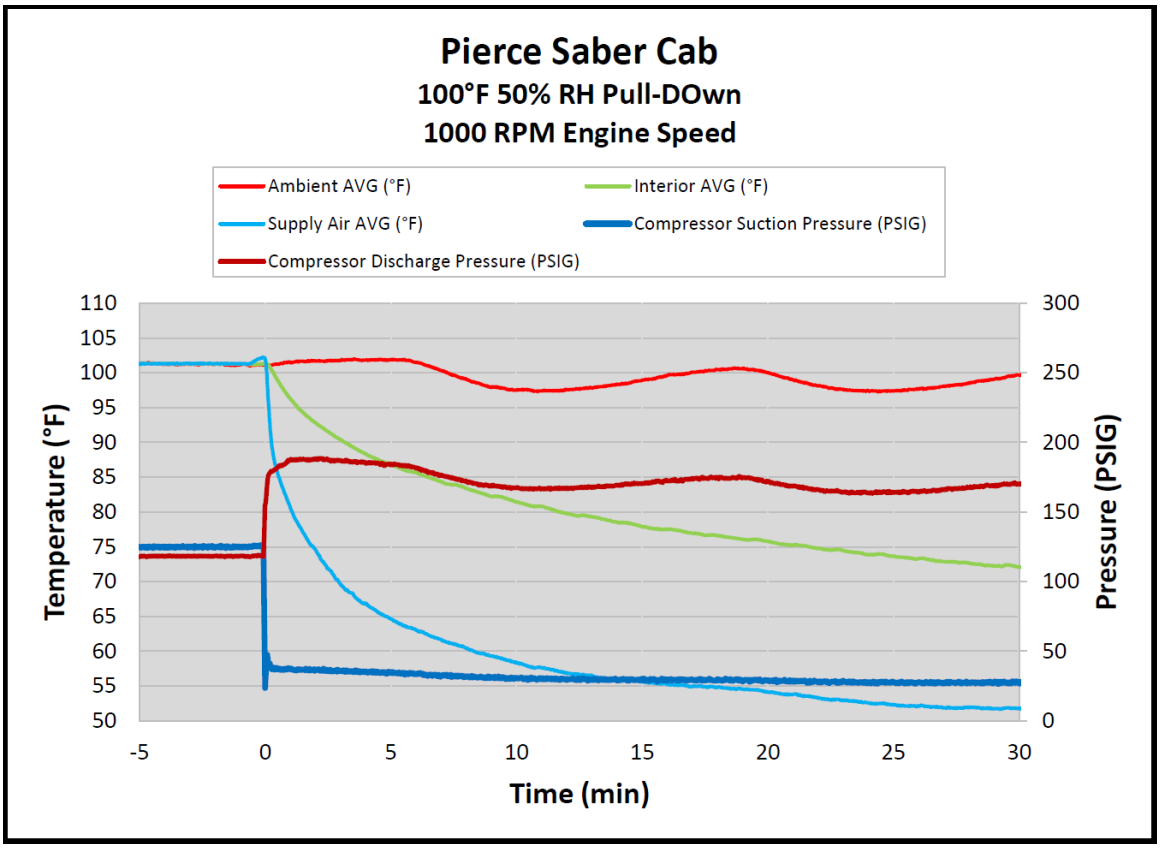

Defrosting

Defroster testing was performed in accordance with *SAE J381 Windshield Defrosting Systems Test Procedure and Performance Requirements-Trucks, Buses, and Multipurpose Vehicles.*

This SAE Recommended Practice establishes uniform test procedures and performance requirements for the defrosting system of enclosed cab trucks, buses, and multipurpose vehicles. Current engineering practice prescribes that for laboratory evaluation of defroster systems, an ice coating of known thickness be applied to the windshield and left- and right-hand side windows to provide more uniform and repeatable test results, even though under actual conditions such a coating would necessarily be scraped off before driving. The test condition, therefore, represents a more severe condition than the actual condition, where the defroster system must merely be capable of maintaining a cleared viewing area.

During the test, the vehicle is cold soaked to 0º F in a cold chamber. A prescribed layer of ice is applied to the windshield. The defroster is then run, and the advancing melt boundary marked as the test proceeds.

The SAE prescribed area of the windshield was 100% cleared and the side windows were 75% cleared within the specified 30-minute period.

Defrost Results



Start of Test



15 Minutes



30 Minutes



Right Viewed From Outside Left

VALIDATION TEST: MCC Test Report TR#19-0047 R00

Pierce Manufacturing, Inc.



David W. Archer
Vice President of Engineering

Mobile Climate Control, Inc.



Brent Griffith
Lead Test Engineer & Large Application Specialist

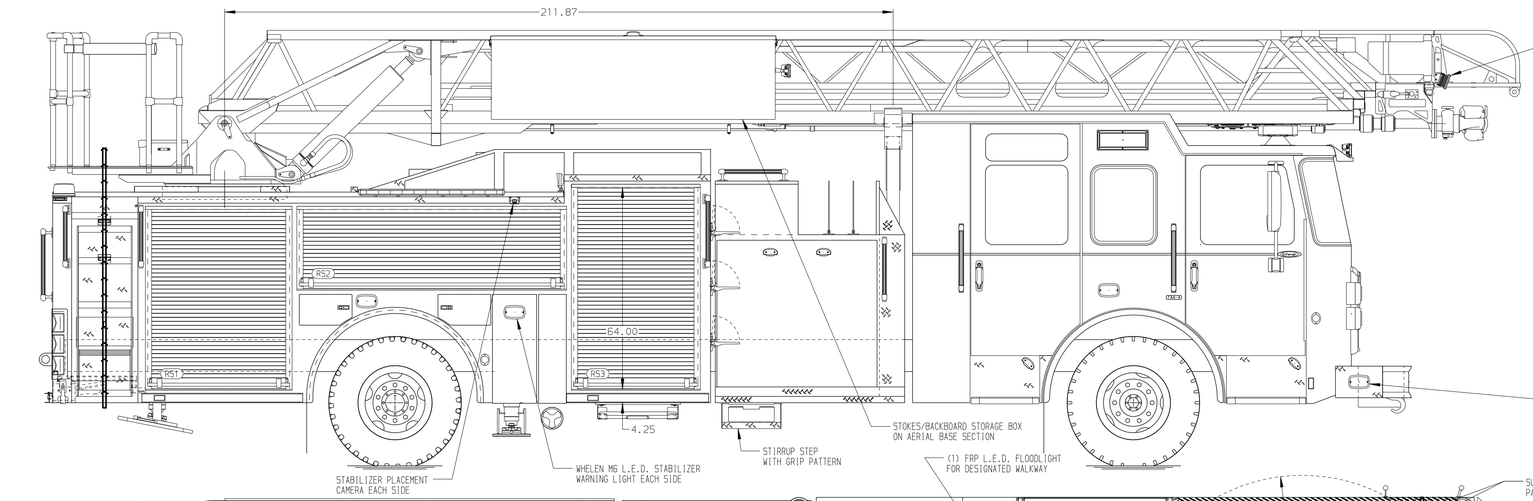

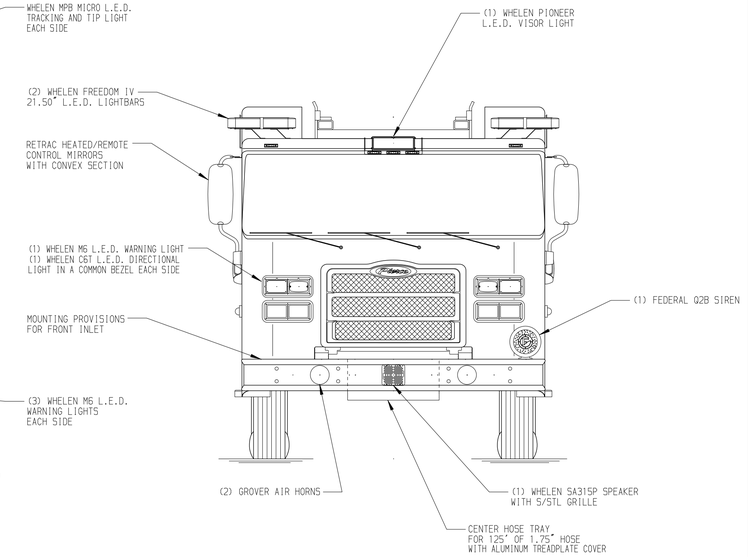

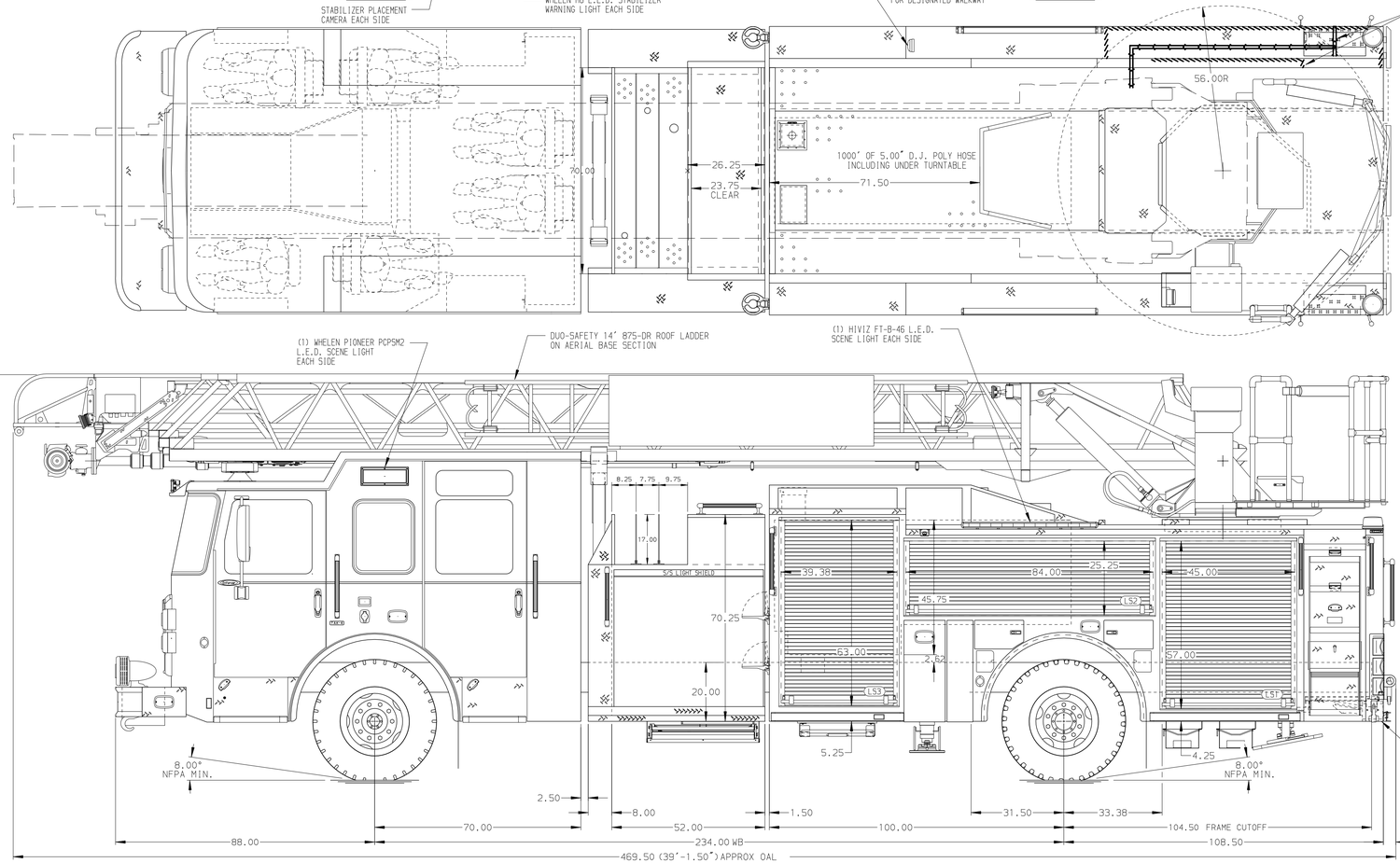

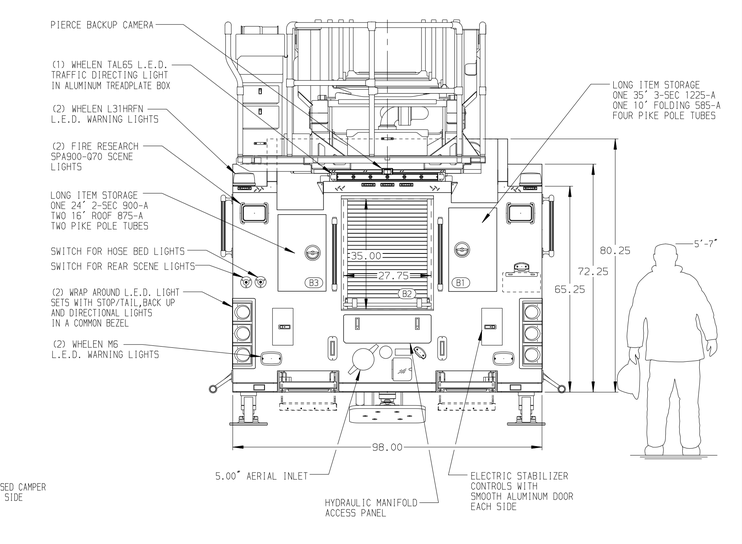

BODY	WATER TANK
107' ASL Aluminum Body	500 Gallon Poly Water Tank
COMPT,LEFT SIDE FRONT	Foam System
Full Height Rollup Forward	Plumbing for Future Husky Foam System
COMPT,LEFT SIDE REAR	Foam Cell
Full Height Rollup Rearward	20 Gallon Foam Cell, Non Reduced Water
COMPT,RIGHT SIDE FRONT	
Full Height Rollup Forward	
COMPT,RIGHT SIDE REAR	
Full Height Rollup Rearward	

CHASSIS	CAB	AXLE,FRONT,CUSTOM	TRANSMISSION	PUMPHOUSE	CROSSLAYS,1.50"	SPEEDLAYS	SAFETY
Enforcer Chassis	7010 Enforcer Notched Cab	22,800 lb TAK-4 Axle	ALlison 5th Gen, 3000 EVS P	52' Control Zone Side Mount	(2) 1.50" Standard Capacity	Speedlays Not Required	Side Roll and Frontal Impact Protection
ENGINE	BUMPER	AXLE,REAR		PUMP	CROSSLAYS,2.50"	GENERATOR	
450 HP Cummins L9 Engine	19" Extended Stainless Steel	33,500 lb Meritor Axle		2000 GPM Waterous CSU	(1) 2.50" Standard Capacity	Generator Not Required	

CUSTOMER APPROVAL

APPROVED BY: _____

DATE: _____

Pierce MANUFACTURING INC.

NOTE

DIMENSIONS SHOWN ARE APPROXIMATE AND ARE SUBJECT TO MINOR DEVIATIONS AS MAY OCCUR OR BE NECESSARY IN CONSTRUCTION.
MINOR DETAILS NOT SHOWN.

1. ONE 1.50 OUTLET WITH 2.00 PIPING AND SWIVEL LOCATED IN CENTER BUMPER TRAY
2. SHORELINE RECEPTACLE WITH KUSSMAUL SUPER AUTO-EJECT LOCATED ON DRIVER SIDE OF THE CAB
3. AIR INLET WITH DISCONNECT COUPLING IN THE DRIVER SIDE STEPWELL
4. BATTERY CHARGER LOCATED BEHIND DRIVER SEAT
5. BATTERY CHARGE INDICATOR LOCATED ON DRIVERS SIDE CAB
6. DUAL L.E.D. LIGHT STRIPS LOCATED IN HOSE BED
7. SIX ADJUSTABLE SHELVES LOCATED IN COMPARTMENTS PER SHOP ORDER
8. FOUR FLOOR MOUNTED SLIDE-OUT TRAYS LOCATED IN COMPARTMENTS PER SHOP ORDER
9. NON-RAISED AERIAL PEDESTAL
10. 1500 GPM HIGH FLOW WATERWAY
11. LIMITED RETRACTION NOT REQUIRED

REV	DATE	BY	CH
▽	-	-	-

CHASSIS DATA

MAKE: PIERCE

MODEL: ENFORCER

TITLE: 107' ASCENDANT AERIAL LADDER AND BODY ASSEMBLY
-

FOR: PIERCE FIELD UNIT
APPLETON, WI

DWG NO. 35447AD

JOB NO.	35447
SCALE 1:24	DATE
DRAWN BY TKA	15JUN20
CHECKED BY THS	15JUN20
SHEET SIZE D	SHEET NO. 1 OF 1

View File Created 15-JUN-2020 14:27:58


Pierce
PERFORM. LIKE NO OTHER.
Pierce
BUILT WITH PRIDE


Pierce
PERFORM. LIKE NO OTHER.
FIRE & RESCU


STREAM MASTER
Pierce


Pierce
911
Pierce
911


Pierce
PERFORM. LIKE NO OTHER.
Pierce

M. LIKE NO OTHER.

ORM. LIKE NO OTHER.™

Pierce


STREAM MASTER







QUALIFICATIONS FOR

DEVELOPMENT OF A COMPREHENSIVE SOLID WASTE MASTER PLAN

SUBMITTED TO

CITY OF JOPLIN, MISSOURI
PUBLIC WORKS DEPARTMENT
OPERATIONS DIVISION
JUNE 9, 2021

June 9, 2021

Mr. Lynden Lawson
Assistant Director of Public Works - Operations
602 S Main Street
Joplin, Missouri 64801

Re: **Request for Qualifications for Development of a Comprehensive Solid Waste Master Plan**

Dear Mr. Lawson:

The City of Joplin (City) has recognized the need to develop a comprehensive Solid Waste Master Plan (Plan) to evaluate the solid waste system, set goals and priorities for solid waste services, and identify recommendations for an integrated, efficient, and effective solid waste management system. To effectively prepare the Plan, your partner must possess the following:

- Experienced project team with planning, environmental, engineering, communications, and financial skills for a wide range of solid waste and recycling issue and proven track record of completing financial studies and analyses of public solid waste management projects and systems.
- Extensive stakeholder engagement experience, including but not limited to focus groups, surveys, workshops/meetings, open houses, developing fact sheets, and city council meetings.

Burns & McDonnell is that partner. Since 1970, the Burns & McDonnell Solid Waste and Resource Recovery Group has successfully completed numerous planning, economic, and operational projects on a wide range of recycling and solid waste issues. Since we only represent local governments, our independence from private companies provides no conflict of interest.

Seasoned Project Team Focused on Solid Waste Planning Provides a Proven Methodology

Laura Drescher, Julie Davis, Scott Pasternak, Scott Martin, Bob Craggs, Seth Cunningham, and Sara Nettels have developed more than 50 solid waste and recycling plans during their combined 100-plus years of experience. With planning, environmental, communication, business, and engineering degrees, our team offers a combination of planning, technical, operational, and financial expertise, resulting in guidance for an implementable plan for the City of Joplin. With team members formerly in local government, our team has unique experience in the implementation of similar solid waste master plans. The methodology we have included in our Project Approach is consistent with our approach for other counties and cities that have successfully implemented Plans. The project team will employ this proven method to develop a meaningful and customized Plan that is unique to the City of Joplin.

Unparalleled Community Engagement Capabilities

The team assembled for this response is comprised of top-tier technical service professionals have extensive public engagement experience while assisting with the development of solid waste management plans. This work has included a range of tasks such as leading public meetings, workshops for public officials, focus groups of stakeholders, and technical support for local governmental public information offices. As such, we are uniquely qualified to obtain project-specific public input that will help guide the Plan's development and convey the project's importance to the community you serve.

We look forward to the opportunity to work with you on this Plan. Please contact Julie Davis at 816-769-1116 or jdavis3@burnsmcd.com should you have questions regarding our proposal.

Sincerely,

Laura Drescher
Project Manager

Julie Davis
Lead Consultant

1. FIRM EXPERIENCE & QUALIFICATIONS

FIRM INFORMATION

Founded in 1898 and head-quartered in Kansas City, Missouri, Burns & McDonnell is a 100 percent employee-owned consulting firm that provides comprehensive professional engineering, architecture, construction, and environmental services. ***Being 100 percent employee-owned means we each have a stake in superior performance and a commitment to excellence that translates into successful clients.*** We are regularly recognized by professional organizations and publications for our technical knowledge, superior client service and as a top place to work, including consistently ranking in *Fortune* magazine's 100 Best Companies to Work For.

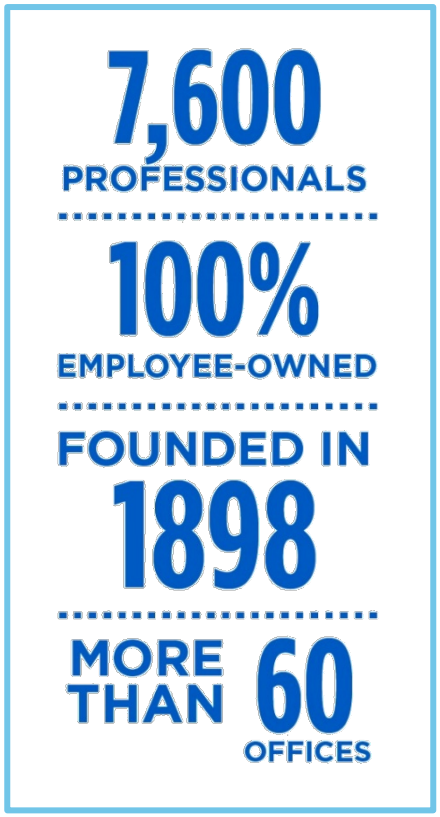

EXISTING RELATIONSHIP

Burns & McDonnell has a strong history partnering with the City of Joplin (City) and successfully executing public works projects such as improvements to the Tin Cup Wastewater Lift Station and permitting support for the Turkey Creek Wastewater Treatment Facility. This experience allows for familiarity with City policies and procedures, as well as a current on-call agreement to perform work under. Burns & McDonnell has relocated multiple staff to Joplin to support these, and other ongoing projects in the area.

SOLID WASTE PLANNING EXPERIENCE

Managing Solid Waste Now, For the Future

Since 1970, our Solid Waste and Resource Recovery Practice has completed hundreds of projects. Solid waste management and resource recovery requires progressive and innovative approaches in the context of sustainable development. Burns & McDonnell offers a full-spectrum of services, combining our solid waste and recycling planning and engineering experience with our business-focused consulting, including financial feasibility and procurement projects. Burns & McDonnell's Solid Waste and Resource Recovery Practice includes the following services:

Solid Waste and Diversion Planning

Careful planning is fundamental for developing and implementing an effective solid waste management program. Our team provides comprehensive, integrated planning services to help you achieve your goals in solid waste and resource recovery management. Representative, recent clients include the communities of Johnson County, Kansas; City of Olathe, Kansas; Unified Government of Wyandotte County and Kansas City, Kansas; City of Springfield, Missouri; City of Columbia, Missouri, as well as clients throughout the Midwest.

Financial Analysis

Financially sound decisions about solid waste and recycling systems require an understanding of costs, revenue, and rates. Our solid waste team has experience completing financial studies and analyses of public solid waste management projects and systems. Many of these projects have focused on providing cities with an understanding of the capital and operational costs of providing a range of solid waste and recycling services, including facilities development and contracts with the private sector. Our unique experience as a design-build

firm allows for accurate construction estimating and ongoing client support with procurement services provides up-to-date costs anticipated from the private sector.

Procurement Services

Our team has spent decades developing procurement documents, evaluating vendor proposals, and assisting in contract negotiations. Our consultants, who bring legal and extensive solid waste and recycling experience, understand issues that surface during the analysis and adoption of contracts for local governments. **Since we only represent cities, our independence from private haulers provides no conflict of interest.** Our recent clients provide a comprehensive and recent database of the costs of services being offered by the private sector. In addition, Burns & McDonnell has successfully assisted local governments with the development of public-private-partnerships to share in the ownership and operation of solid waste facilities.

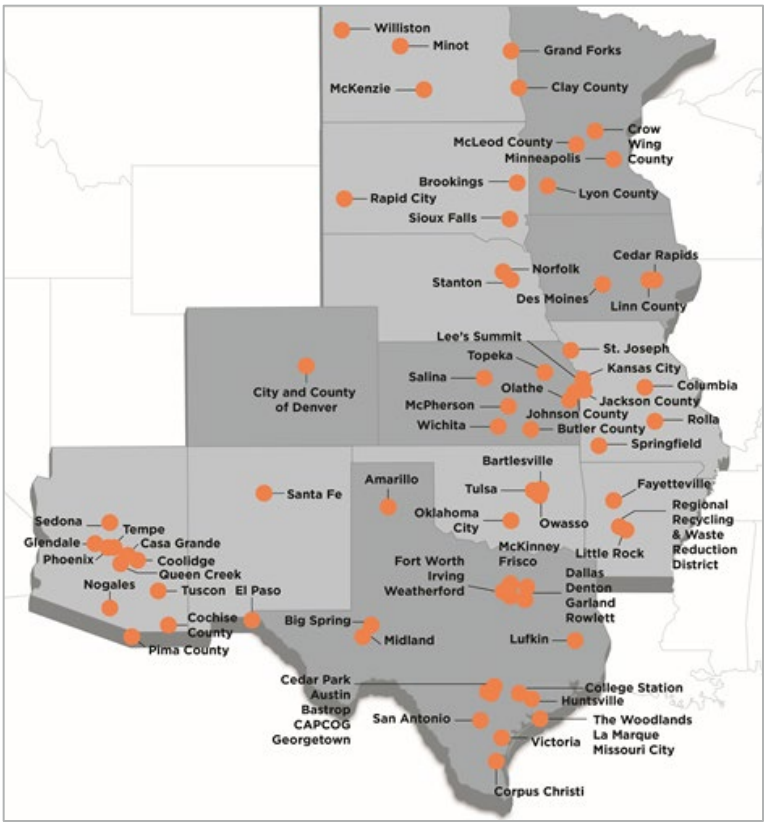

Burns & McDonnell's solid waste planning experience focuses on the Midwest region in coordination with the location of our primary solid waste staff: Kansas City, Denver, Minneapolis, and Austin.

Stakeholder Input

Seeking input from residents, businesses, and elected officials is a critical aspect of developing a solid waste master plan. Our planning services often include a wide range of stakeholder input, including but not limited to focus groups, surveys, workshops/meetings, open houses, developing fact sheets and city council meetings.

Facility Permitting, Design, and Construction

Our team has significant experience in the permitting and design of solid waste facilities including landfills, material recovery facilities, transfer stations, composting facilities, public drop-off areas, and household hazardous waste collection facilities. Our relationships and reputation with state regulatory agencies and familiarity of existing solid waste regulations streamline the permitting process. In addition to facility design, our team is on the forefront of emerging technologies in landfill gas to energy and leachate management. As a design-build firm, Burns & McDonnell can perform construction services or provide construction quality assurance on behalf clients.

2. PROPOSED TEAM

Burns & McDonnell's culture is to work as a team with the client to complete the project on-time and on-budget and in conformance with the project requirements. Our team includes Laura Drescher, Scott Pasternak, Scott Martin, Bob Craggs, Seth Cunningham, Sara Nettels and Julie Davis who combined have developed more than 50 solid waste and recycling plans during their combined 100-plus years of experience.

With planning, environmental, legal, communication, business, and engineering degrees, our team offers a combination of planning, technical, operational, environmental, and financial expertise, resulting in guidance for an implementable plan for Joplin, Missouri. With team members formerly in local government, our team has unique experience in the implementation of similar solid waste management plans. We understand the value of stakeholder engagement and how it translates to public support for successful outcomes. Our team has experienced first-hand the political and procedural challenges of implementing new solid waste systems and knows what it takes to achieve diversion and efficiency goals.



Laura Drescher, PE, ENV SP | Project Manager

10 Years of Experience | 10 Years with Burns & McDonnell

Laura offers a broad range of professional solid waste consulting services including master planning and solid waste/recycling collection, processing and disposal procurement, and operational review for local governments. Laura is also a Professional Engineer and has extensive experience in the permitting, design, and construction of solid waste facilities. She serves in multiple leadership roles for the Missouri and Kansas Chapters of the Solid Waste Association of North America, the Missouri Waste Control Coalition, and is a member of the 2018 class of the Chamber of Commerce Leadership Missouri.



Julie Davis | Lead Consultant

14 Years of Experience | 1 Year with Burns & McDonnell

Julie Davis is experienced in environmental planning, policy development, community engagement, and program management. She has managed a solid waste program responsible for regulatory oversight at regional municipal solid waste landfills, transfer stations, and composting facilities. She has developed solid waste management plans and conducted facility feasibility studies focused on increasing diversion through innovative, community-supported, and sustainable approaches. Julie utilizes her thirteen years of public sector solid waste management experience to assist communities with their program needs including planning, policy, regulatory, and community engagement consulting.



Bob Craggs | Senior Technical Advisor

30 Years of Experience | 8 Years with Burns & McDonnell

As the National Manager of the Solid Waste and Resource Recovery Group, Bob has extensive experience working with local governments addressing a range of solid waste and recycling planning services. He has completed solid waste and recycling plans ranging from medium sized communities [such as Georgetown (TX), McLeod County (MN), Sheridan (WY) and Sioux Falls (SD)] to large cities (like Dallas, Denver, San Antonio, New York, San Jose, Honolulu, St. Louis County, Phoenix, Minneapolis, Oklahoma City and Kansas City). His legal background provides a unique perspective assisting clients with procurement projects, as he has completed more than 25 solid waste and recycling collection and facility procurements for clients across the country. Bob also completed numerous business plans, financial analysis and cost of service studies throughout the U.S. for cities like Dallas, Denver, Grand Forks, Oklahoma City and Phoenix, and Santa Barbara County (CA) and McLeod County (MN).



Scott Pasternak | Principal Planner

28 Years of Experience | 7 Years with Burns & McDonnell

Scott serves as a leader for Burns & McDonnell's solid waste clients, which focuses on advancing the solid waste and recycling programs for governmental entities. Since the 1990s he has worked with local, regional and governments to solve challenging technical and financial solid waste management and recycling issues. Over this time period, he has completed hundreds of projects for clients across the United States. Geographically, he has worked for governmental clients in 19 states. Prior to joining Burns & McDonnell, he was a national leader within SAIC's (formerly R. W. Beck) Solid Waste Practice from 2000 - 2013. From 1995-2000, he was a solid waste planner for the Texas Commission on Environmental Quality (TCEQ).



Seth Cunningham, PE | Financial Analyst

21 Years of Experience | 7 Years with Burns & McDonnell

Possessing both business and engineering degrees, Seth provides our governmental clients with creative, yet fiscally responsible solutions to their solid waste and recycling challenges. Seth brings a strong understanding of solid waste and recycling issues. In addition, he has led public-private partnership and contracting projects for the cities of Austin, San Antonio and Bastrop, as well as recycling market development and waste forecasting studies for the Capital Area Planning Council of Governments. He has also contributed to solid waste and recycling planning studies for Dallas, Honolulu, Phoenix, Denver, Santa Fe, Tulsa and the States of Texas and Colorado. He has also led more than 50 solid waste operational and financial studies, focusing on collection, recycling processing, composting and disposal operations.



Scott Martin, PE | Quality Assurance/Quality Control

15 Years of Experience | 13 Years with Burns & McDonnell

Scott works as a design engineer and project manager in the Environmental Engineering Group. He provides a multi-disciplined approach to landfill gas and solid waste engineering, with solid experience performing mechanical and civil design work. His responsibilities include: confidential oil & gas client program management, landfill gas power plant design, landfill gas collection system design, landfill gas beneficial utilization, landfill design, and construction; air and solid waste permitting, landfill air and solid waste regulatory compliance, and greenhouse gas compliance. Scott has experience on a wide variety of projects including waste facility design, landfill permitting, truck wash facility design, landfill gas power plant design, landfill gas collection system design, landfill methane migration mitigation, landfill gas-to-energy due diligence auditing and financial feasibility evaluations, Greenfield landfill design, watershed hydrology, mine remediation, contaminated groundwater treatment systems, and remediation project development and decommissioning.



Sara Nettels | Public Involvement

10 Years of Experience | 7 Years with Burns & McDonnell

Sarah is responsible for supporting a wide variety of communication and public outreach services for our clients, including developing programmatic communication strategies and public outreach plans. Sarah coordinates communication and public involvement activities on major projects, as well as facilitating project communication strategies and developing public outreach plans. Sarah helps to implement strategic outreach plans and processes, including elements of social media, video production, newsletters and fact sheets, website content, news releases, coordinating public meetings and open houses, managing comment forms and mailing lists, as well as designing a variety of visual elements and infographics. On the real estate side, Sarah manages real estate responsibilities with the project teams – both internal and client-facing, executes project community outreach and notifications, and oversees subcontractors and ROW agents responsible for serving as a liaison between the landowners and construction team in order to facilitate access, manager property owner concerns, and negotiate construction activities.

3. PROJECT EXAMPLES & REFERENCES

Below are representative solid waste and diversion planning and contracting projects over the past five years that were led by our proposed team. References, including contact information, are included herein as well as identification of similarities to the City's proposed Plan. Additional information related to these projects is available upon request.

Project Experience Legend

PROJECT NAME | CLIENT NAME AND PROJECT LOCATION | DATES OF COMPLETION OR STATUS

Services Provided:

- Solid Waste Planning
- Financial Analysis
- Public-Private Partnership & Procurement Services
- Stakeholder Input
- Project Similarities
- Client reference

Project Experience

GENERAL SOLID WASTE PLANNING SERVICES | COLUMBIA | ONGOING

Burns & McDonnell has worked with the City of Columbia, Missouri on solid waste planning, permitting, design, and construction projects for over 40 years. Projects have included cost of services studies; compost facility siting, permitting, and design; organic waste diversion and life cycle carbon planning/evaluation; landfill expansion master planning, permitting, design, and construction quality assurance; solid waste operations center planning and engineering support; recycling program support, renewable natural gas feasibility study, ongoing operational support for a bioreactor landfill cell, and design, implantation, and expansion of a landfill gas to energy system in partnership with City utilities.

Adam White
573-874-7555
adam.white@como.gov

Burns & McDonnell provides a variety of services to support multiple solid waste programs operated and owned by the City of Columbia to meet City and State-set goals. Evaluation of solid waste facilities use to optimize efficiency and capacity.

SOLID WASTE MANAGEMENT PLAN | UNIFIED GOVERNMENT OF WYANDOTTE COUNTY AND KANSAS CITY KANSAS | 2020

Burns & McDonnell developed UG's first major solid waste management plan, which focused on evaluating and updating their residential collection program from a weekly take-all curbside program with minimal recycling participation to increase diversion and improve customer service. Financial analysis was conducted on service level changes as well as the potential for the UG to own and/or operate facilities and programs. Significant feedback was generated by the advisory committee and elected officials on levels of services expected and reaction to cost.

Jeff Fisher
913-573-5415
jfisher@wycokck.org

Current UG solid waste system is similar to Joplin and have a desire to significantly increase diversion and create a consistency of services provided, while maintaining an appropriate cost to residents.

SOLID WASTE MANAGEMENT PLAN UPDATE | JOHNSON COUNTY, KS DEPARTMENT OF HEALTH AND ENVIRONMENT | 2019

Burns & McDonnell worked with the Johnson County (County) Department of Health and Environment (JCDHE) to develop a comprehensive Solid Waste Management Plan (Plan) to update and replace the 2013 Plan. The Plan included coordination between a County-wide Solid Waste Management Committee, 20 participating municipalities, multiple private solid waste management companies, the Mid-American Regional Council (MARC), and JCDHE staff. Burns & McDonnell provided ongoing stakeholder engagement, including public surveys, public open-house, stakeholder workshops, and presentations to the elected board, throughout the Plan development period.

Craig Wood
913-715-6917
Craig.Wood@jocogov.org

Significant education and outreach including surveys, public meetings, stakeholder meetings, and regular Solid Waste Committee/staff meetings.

TRANSFER STATION PROCUREMENT, BASELINE ASSESSMENT & DESIGN AND RENOVATIONS | CITY OF OLATHE, KANSAS | 2015 - 2019

Burns & McDonnell conducted a strategic analysis in preparation for the City's proposed expansion of the transfer station and procurement of transfer station operations and disposal and recycling processing services including a financial analysis comparing self-performance and contracting. In addition to procurement and planning support, Burns & McDonnell provides ongoing design and construction services at the City's transfer station.

Alan Shorthouse
913-971-9037
ashorthouse@olatheks.gov

Private contracts for recycling processing and waste disposal accepted at the transfer station. Ownership of transfer station allows for the option to self-operate or contract operation.

SOLID WASTE COLLECTION EVALUATION AND PROGRAM PLANNING | CITY OF SPRINGFIELD, MISSOURI | 2016 - 2018

The City of Springfield selected Burns & McDonnell to assist the City's Solid Waste Department to study the efficiency of trash and recycling collection services and identify potential options for improving the efficiency and long-term viability of trash collection services within the City's Integrated Solid Waste Management System. The City of Springfield's residential trash and recycling collection program is currently provided by licensed private trash and recycling hauling companies in an open-market system where customers contract directly with licensed haulers to provide needed solid waste and recycling services. Specifically, our assistance included the following:

- Evaluated the current residential collection program
- Conducted a comprehensive survey of City residents to measure attitudes and preferences
- Identified three alternative programs for consideration
- Presented the results to various stakeholders (e.g. haulers, neighborhood councils) and attend a series of public meetings.

Erick Roberts
417-864-2001
eroberts@springfieldmo.gov

Significant stakeholder engagement including the private industry and public regarding service changes.

SOLID WASTE MASTER PLAN, MRF/CO-COMPOSTING FACILITY REVIEW, AND COST OF SERVICE | CITY OF RAPID CITY, SOUTH DAKOTA | 2020 - ONGOING

Burns & McDonnell is assisting the City of Rapid City (City) to set the "roadmap" for the future of all three the City's Solid Waste Division service lines: Landfill Disposal; Material Recovery Facility and Co-Composting; and Collection. Burns & McDonnell is placing an emphasis on stakeholder management services, as public input will be critical for the Plan's success. Master Plan Key Considerations:

- Develop methods that the City can easily use to track landfill airspace utilization. An operations efficiency study could be a good component of the Plan to identify areas for improvement.
- The Plan will look at solid waste industry trends such as source separated organics diversion and renewable energy production.
- Collection services. Evaluation of haul routes, planning for expansion of collection services, and develop recommendations for efficiently managing the collection of MSW, recyclables, organics, and bulky waste.

The Master Plan will include a cost-of-service analysis and recommendation of future rates, an analysis of service area and the services provided, and a projection of waste generation in the market area.

Jeff Barber
605-355-3496
Jeff.Barber@rcgov.org

Review and optimization of locations of publicly-owned solid waste facilities and operated services.

SOLID WASTE MASTER PLAN | NORTHEAST MINNESOTA WASTE ADVISORY COUNCIL/WESTERN LAKE SUPERIOR SANITARY DISTRICT (WLSSD) | DULUTH, MINNESOTA | 2021 - PRESENT

Burns & McDonnell was retained to develop a regional solid waste management plan for the seven northeast Minnesota counties of Aitkin, Carlton, Itasca, Koochiching, St. Louis, Lake, Cook, and the WLSSD. The goals of the SWMP include providing a roadmap for cost effective, environmentally prudent waste management for the region over the next 10 years, and gain plan approval from the Minnesota Pollution Control Agency. Key issues include securing long term disposal capacity and improving recycling and organics programs.

Dan Belden
218-740-4774
Dan.Belden@wlssd.com

Plan focus on same waste streams as Joplin (MSW, organics, and recyclables) and has a more regional review which will be necessary when considering Joplin's access to landfill and recycling processing facilities.

SOLID WASTE AND RECYCLING FINANCIAL AND DIVERSION STUDY | CITY OF DENVER, COLORADO | 2017-2019

The City and County of Denver developed the Master Plan for managing Solid Waste in 2010. The City is seeking to increase its recycling rate from the current 18 percent to meet or exceed the Plan's 34 percent recycling rate by 2020. In 2017, the City retained Burns & McDonnell to provide an independent assessment of the programs and costs that would need to be implemented and/or improved to achieve the recycling rate goal. This work included developing an Excel-based model to conduct "what-if" scenarios to compare potential materials diversion and program costs. Following the analysis, Denver retained Burns & McDonnell to develop an implementation plan for deployment of staff, equipment and integration of new software. Key analysis addressed for Denver included:

- Financial and Operational Analysis: Evaluated the City's solid waste and recycling program costs and operations.
- Benchmarking: Documented successful and unsuccessful programs nationally, including statistical correlation between billing rates and recycling quantities.
- Sensitivity Analysis: Developed a detailed, Excel based decision making tool/pro forma based on the City's operational and financial metrics that allowed for extensive sensitivity analyses.
- Software Integration: Procurement of new work order management and billing system software.

Charlotte Pit
303-446-3413
charlotte.pitt@denvergov.org

Evaluation of changes to services provided and programs to increase diversion to meet a planned goal in a cost-effective manner.

SOLID WASTE & RECYCLING STRATEGIC PLAN, COST OF SERVICE AND CONTRACTING STUDY | CITY OF DENTON, TEXAS | 2015 - 2017

Strategic plan focuses on increasing recycling and waste minimization, increasing efficiency and community satisfaction. Plan was supported by a cost-of-service study that included an evaluation of the cost of privatization of recycling services. Stakeholder input via workshops, interviews and City Council meetings.

Tyler Hurd
940-349-8043
Tyler.Hurd@cityofdenton.com

Goals of strategic plan is very similar to Joplin: evaluate existing services and increase diversion in a cost-effective manner.

STRATEGIC SOLID WASTE AND RECYCLING PLAN | CITY OF EL PASO | 2016-2017

Establishes goals and actions for the City to address the City's most important solid waste and recycling issues. The plan includes detailed implementation plans focusing on roles, responsibilities, schedules and funding (operational and capital). Other projects for the City have evaluated the cost of services, including contracted services. Stakeholder input via multiple workshops and interviews.

Ellen Smyth
915-212-6060
smythea@elpasotexas.gov

Review of both capital and operational costs of solid waste services and potential funding sources for implementation.

RECYCLING PROCESSING PLANNING & IMPLEMENTATION SERVICES | CITY OF DALLAS | 2015 - 2017

Evaluated the financial and technical feasibility of multiple options to increase recycling in the city. Based on this evaluation, conducted a procurement that led to a new $20 million recycling facility being built at the City's landfill, as a part of a 15-year service contract. Stakeholder input included community meetings, City council meetings and fact sheets.

Kelly High; 214-686-8533;
kelly.high@dallascityhall.com

Evaluated multiple options to increase diversion and utilized private contracts and public private partnerships to achieve diversion goals.

ZERO WASTE MANAGEMENT PLAN | CITY OF MINNEAPOLIS | 2017

Identified strategies to increase diversion of recyclable materials and organics for the residential, commercial, institutional and public space generators. Evaluated multiple public-private partnership options such as licensing and franchising. Conducted multiple stakeholder meetings with the public and City Council. Previously, completed a recycling procurement for the City in 2016.

David Herberholz
612-673-2433
david.herberholz
@minneapolismn.gov

Evaluated public-private partnerships with the private solid waste sector to increase diversion in all sectors, not just curbside residential.

THE ECONOMIC IMPACTS OF RECYCLING | THE TEXAS COMMISSION ON ENVIRONMENTAL QUALITY | 2016 - 2017

Statewide recycling study that provides key insight on recycling strategies, financial costs and benefits and options to develop public-private partnerships. Stakeholder input via workshops, presentations, surveys, webinars and factsheets/graphics.

David Greer
512-239-5344
David.Greer@tceq.texas.gov

Evaluated options utilizing the private industry with public infrastructure, similar to structure in Joplin.

4. PROJECT UNDERSTANDING

The City of Joplin has recognized the need to develop a comprehensive Solid Waste Master Plan (Plan) to evaluate the solid waste system, set goals and priorities for solid waste services, and identify recommendations for an integrated, efficient, and effective solid waste management system. The Missouri Solid Waste Management Law, Section 260.325 regulations on solid waste management plans are not applicable as the City's Plan is not representing the formal Solid Waste Managemennt District M, however can be of guidance in organization and content development. Burns & McDonnell will assist the City in reviewing the quanity of recyclable and organic materials diverted from landfills and evaluating their current diversion against the recommended goal of fourty percent (40%) by weight, as recommended by Missouri Solid Waste Management Law, Section 260.250.

PLAN PRIORITIES

Optimize existing solid waste systems and facilities.

Utilize stakeholder engagement to provide evaluate additional or improved services offered.

Develop measurable goals for material diversion in accordance with the State Plan and community interest.

Develop an implementation plan to increase diversion to achieve goals and improve customer satisfaction with services provided.

The City has a dynamic Recycling and Solid Waste Management Program which oversees a variety of services as follows:

- The City currently contracts with Republic Services for residential solid waste services which includes the collection of trash in 96-gallon carts with the optional subscription service collection of recyclables in a provided cart. Residents are allowed to set out additional waste and bulky items for no extra fee.
- Residents have access to drop-off brush, tree limbs, and bulky items at the WCA transfer station for a subsidized fee.
- The City owns and operates a Recycling Drop-Off Center which accepts common recyclables, household hazardous waste, used cooking oil, electronic waste, and shredding services.
- The City owns and operates a tree limb drop-off site which chips the material and offers the resulting mulch to residents to pick up for no charge.
- The City owns and operates a yard waste composting site. The City collects yard waste annually from residents in addition to the year-round drop-off facility. Compost is available to the community to pick up for no charge.

The City has identified the challenge with having multiple locations for various drop-off services from both an operational standpoint and a public conveniences perspective. It has also been identified that the Recycling Drop-Off Center is having capacity challenges to keep up with the service demands. The Plan will evaluate these solid waste system components, infrastructure, and programs to provide recommendations with the intent of having all solid waste components integrated for efficiency and effectiveness. Specifically, the Plan will include a comprehensive review of the existing system and identify and evaluate options based on current trends that promote and support diversion. The Plan will include a proposed Capital Improvement Plan to consolidate or co-locate services to include cost and feasibility analyses of facility options and a preferred approach to implementation.

Burns & McDonnell recognizes the importance of gaining community support through active stakeholder participation including from the Solid Waste Advisory Committee, City Council and the public while developing the Plan. Stakeholder input is a critical component to determine the wants and needs of the community and will be solicited throughout the development of the Plan.

Planning and implementing an integrated solid waste management program is a complex and challenging endeavor encompassing a host of issues: financial, technological, institutional, legal, social, and environmental.

Recognizing this, as well as the benefits of a more integrated approach, Burns & McDonnell is proposing to assist the City in developing a Plan that provides the vision and framework to guide future activities and to develop the infrastructure, programs and policies needed to manage your solid waste. Our experience shows that effective solid waste master plans:

- Reflect the community's values and guiding principles for waste management and diversion.
- Establish local waste management planning goals.
- Include analysis and consideration of reasonable alternative options and strategies.
- Develop management methods that are consistent with the EPA's waste management hierarchy (shown on the adjacent graphic), to the extent they are economically and technologically feasible.
- Make fiscally responsible and environmentally focused decisions.



5. PROJECT APPROACH

SCOPE OF WORK

This document describes Burns & McDonnell's draft approach to developing a Solid Waste Master Plan for the City. The Burns & McDonnell Project Team is open to discussing this approach and customizing it to meet the City's needs. Tasks 1 and 2 focus on data analysis and evaluating the existing system. Task 3 identifies the stakeholder engagement activities that will take place throughout the development and adoption of the Plan. Tasks 4-6 concentrate on evaluating options and developing strategies and implementation plans. The following graphic summarizes the planning process. We have provided a project schedule at the end of this section.

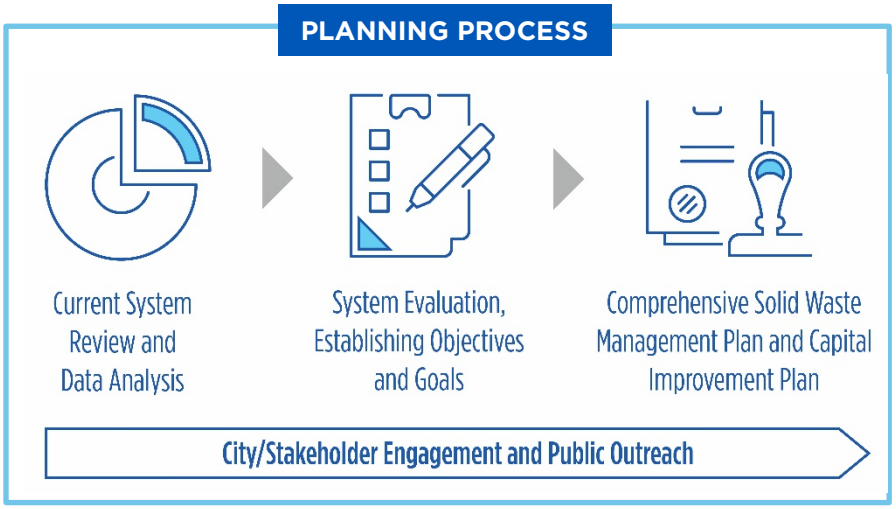

Task 1: Project Management, Information Request, and Project Kick-off

Task 1A – Provide Project Management and Oversite

To implement the proposed approach, a high level of project management and oversight will be provided throughout the project. Our Project Manager, Laura Drescher, is responsible for meeting the project budget and schedule. Laura has a proven track record of completing challenging solid waste management and planning projects for cities. We will maintain regular communication between the Project Team and City staff through formal and informal efforts, including monthly meetings.

Task 1B – Information Request

Approximately five working days following receipt of the Notice to Proceed for the project, we will provide the City with a preliminary data request that encompasses the data needs for completing the Plan.



Task 1C – Kick-off Meeting

The purpose of the kick-off meeting is to initiate the project and confirm the project objectives, scope of work and schedule. We will schedule a meeting with designated City staff and key members of the Project Team. The meeting will accomplish several objectives, including:

- Introduce key members of the Burns & McDonnell Project Team
- Discuss the project timeline and scope
- Discuss the stakeholder engagement process
- Identify key issues and develop initial goals for the Plan

Task 1 Deliverables

- Information request summary sheet
- Kick-off meeting agenda

Task 2 – Solid Waste System Evaluation

Task 2A – Review of Related Solid Waste Contracts, Plans, Trends, Policies and Regulations

This task provides key baseline and background information for the Plan. This will include a review of the regional solid waste management district reports and any other related local plans. We will identify pertinent trends, key policy initiatives and major regulatory requirements at the Federal, state, and local levels that will have a direct impact on initiatives included within the Plan.

Task 2B –Current System Review and Needs Assessment

Key to the development of the Plan is gaining a strong understanding of the current system and developing a baseline to which recommendations and initiatives can be compared. During this task, we will address the following programs performed by the City and its solid waste and recycling contractors:

- Contracted services for curbside residential collection.
- Contracted services for brush, bulky items, and tires at the WCA Joplin Transfer Station.
- City owned and operated Recycling Drop-Off Center.
- City owned and operated tree limb drop-off site.
- City owned and operated yard waste composting site.

The review will include the following elements as they pertain to each program:

- **Description of Service:** Describe key services and programs, service level provided, and other key elements of each service.
- **Location and Accessibility:** Evaluate the current location for each service and the accessibility to the public in terms of convenience and navigation.
- **Capacity** (City-operated programs only): A review of the current program site capacity will inform the needs to meet the service demands from the community
- **Benchmarking:** Compare the City's programs to comparable programs in the region that are serviced by the public and private sectors.
- **Financial Analysis:** Conduct an evaluation and analysis of the current and anticipated financial and budgetary activities of the solid waste and recycling services.

- **Alignment with Goals and Objectives of the Plan:** We will identify whether the service as currently provided in the City aligns with the goals and objectives of the Plan, as identified by City staff in Task 4. In addition, we will identify specific aspects of each service that could be changed to bring the service into further alignment with stated goals and objectives.
- **Alternative Options:** Provide a list of alternative options and descriptions for further evaluation in Task 4.
- **Key Findings and Recommendations:** We will provide key findings and recommendations regarding each service that will be considered for implementation in the planning process. As appropriate, we will also identify services, programs, or facilities to be modified.

Task 2 Deliverables

- Current System Review Section of the Plan



Task 3 – Stakeholder Engagement

The City and Burns & McDonnell recognize the importance of gaining community support through active participation of the public from inception to completion of the Plan. We believe in comprehensive and innovative approaches to public participation. Burns & McDonnell will work in collaboration with City staff to seek support and involvement from a broad and diverse base of the community, which in turn will yield a greater and more meaningful impact on the future of the City's solid waste management system. Our team's responsibilities to complete for this task will include some combination of the following and will be finalized based on discussions with the City's Project Manager:

- Facilitate workshop(s) with the Solid Waste Advisory Commission at key points during the planning process. They will serve an important role on this project by providing input and suggestions, assisting with the identification of key issues, serving as a 'sounding board' for ideas and alternatives and providing an avenue for public comment. The Solid Waste Advisory Commission will also serve an essential role during selection of the preferred strategy and development of recommendations.
- Conduct a public survey of residents within the City. Our survey approach would be designed to obtain public input to encourage broad participation from residences within the community. The survey could include topics such as customer's familiarity and satisfaction with current programs and interest and willingness to pay for potential services. Virtual surveys are an effective tool to gather feedback very efficiently; the survey could also be available for those without online access.
- Develop web-ready fact sheets and online content for the City's website.
- Prepare and facilitate an open house(s) for the public using activities and visual materials to convey information and gather input including discussions on potential programs that can be provided and their potential costs.
- Schedule a presentation to the City County at key point(s) during the planning process to align the Plan's goals and objectives with perspective from the City Council.

Burns & McDonnell will coordinate will City staff to select the preferred timeframes and dates to conduct the workshops and meetings. We developed this approach based on our current understanding of desired stakeholder and public input. We recognize that there could be an interest to solicit a varying degree of stakeholder input. Should this occur, we are prepared to discuss options with City staff.

Task 3 Deliverables

- Strategy workshop(s) with Solid Waste Advisory Commission and City staff.
- Plan section that describes the stakeholder engagement process.
- Coordination and conducting the stakeholder engagement activities (e.g., surveys).

Task 4 – Evaluate Options and Establish Plan Goals and Objectives

Task 4A – Establish Plan Objectives

We will work with participants and facilitate a process to establish the goals and objectives of the Plan. Clearly defining the objectives of the Plan is a critical step, as the objectives will create a framework for evaluating potential future initiatives. This facilitated process will build on initial discussions from the kick-off meeting. For example, our team expects that an important focus of the City's solid waste program in the future will be to examine the following:

- Develop recommendations that are in alignment with the citizens' interests.
- Evaluate options to continue increasing recycling and decrease disposal.
- Make fiscally responsible and environmentally focused decisions.
- Foster collaborative public/private partnerships to increase diversion and manage costs.

Task 4B – Identify Alternative Strategies and Evaluate Options

The range of solid waste and diversion management strategies and practices to be considered will include key options available to the City. Based on the results of our analysis completed during Tasks 1-3, we will compile a summary of preliminary alternative program options that the City may wish to consider including in the Plan. Options may be enhancements to current services or new initiatives.

We will present the initial list of issues/options to City staff. For each option, we will provide a listing and description of potential program strategies that could be considered. The purpose of this discussion will be to seek input regarding the types of strategies that are of the greatest interest and should be further evaluated. Burns & McDonnell's role during the workshops will be to serve as an "opinionated facilitator," as to provide solid waste and diversion experience.

Task 4 Deliverables

- Discussion with City staff and Solid Waste Advisory Commission to review Tasks 1-3 and to establish Plan objectives and goals.
- Section of the Plan that describes the Plan objectives and goals.

Task 5 – Capital Improvement Plan

Task 5A – Financial Analysis

This task will provide a planning level understanding of the potential capital and operating costs for development and operation of co-located City services including the Recycling Drop-Off Center, tree limb drop-off, and yard waste compost site. Information gathered during the Needs Assessment in Task 2, as well as information derived from the stakeholder engagement activities, will inform the facility needs and potential options. Based on the Plan goals and objectives identified by City staff in Task 5, Burns & McDonnell will provide up to three alternative strategies (e.g., co-locating services, public/private partnerships, facilities with various capacities) and one strategy will be selected for development of a Capital Improvement Plan. Burns & McDonnell will utilize recent project experience to prepare capital and operational costs based on the selected strategy.

Task 5 Deliverables

- Preliminary cost estimates and feasibility analysis for preferred strategy.

Task 6 – Prepare Solid Waste Master Plan and Develop Implementation Plan

Task 6A: Prepare a Solid Waste Master Plan

All the task deliverables described in prior tasks will be compiled into a draft Plan. Burns & McDonnell will deliver individual sections of the Plan to City staff as they are drafted to expedite the review process. We will also develop an Executive Summary section of the Plan. The complete draft will be provided initially for City staff review. A second draft will be developed to incorporate comments from City staff. We will coordinate with City staff to obtain approval for the Plan from City Council (as described in Task 3).

Task 6B: Develop an Implementation Plan

Burns & McDonnell will develop a planning level implementation plan that will describe the specific activities associated with implementing each of the strategies and options. For each activity listed in the Implementation Plan, our team will identify the following:

- Description of activity to be taken
- A timeline for carrying out the activity
- The responsible party(s)
- The projected operating and capital cost
- Potential funding sources
- Impact on the diversion rate (as applicable)

It is our experience that this level of detail enhances the likelihood that these activities will be implemented since it provides a clear explanation of what should be accomplished within a given time. The Implementation Plan will be created in a format that allows the City to sort the activities by year, by responsible party, and by cost. In this way, it will be easy to review the activities in the Implementation Plan in different ways that aid in implementation. For example, this will allow City staff to generate an annual budget for each of the 20 years, as well as generate a "to do" list and schedule for each responsible party. This approach will enable to City to evaluate the impact of potential programs and costs, providing insight on the impacts to user fees. The Implementation Plan will be more detailed for the short-term recommendations, as compared to the medium and long-term recommendations.

Task 6 Deliverables

- Plan section that summarizes the key activities to be accomplished in support of successfully implementing each strategy and option.
- Draft and final versions of the Plan via pdf.
- Plan presentation in PowerPoint.

6. PROJECT SCHEDULE

See below for the proposed schedule for the Solid Waste Master Plan to be completed by the end of 2021, as requested by the City. This schedule assumes Notice to Proceed will be received in July 2021.

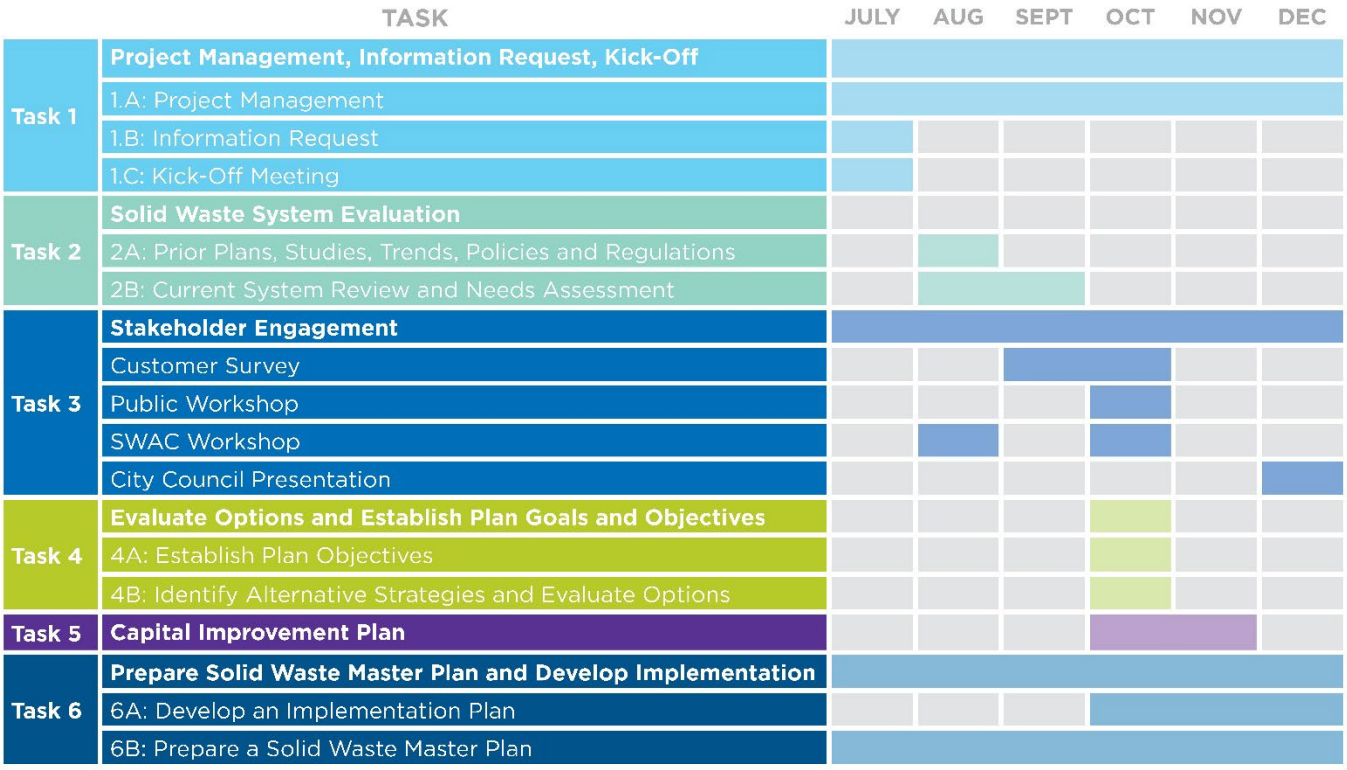



CREATE AMAZING.

9400 Ward Parkway
Kansas City, MO, 64114
burnsmcd.com

CITY		ENGINEER	
CITY OF JOPLIN **602 S. MAIN STREET** **JOPLIN, MO 64801**		Name: Burns & McDonnell Address: 9400 Ward Parkway KANSAS CITY, MO. 64114	
Attention: Lynden Lawson		Attention: Laura R. Drescher	
Department: Public Works		Phone: 816-823-6241	Fax:
Phone: 417-624-0820 x1560	Fax: 417-625-4738	**SOLID WASTE MASTER PLAN**	

WORK AUTHORIZATION NUMBER BMC-OC22-001
TO AGREEMENT FOR PROFESSIONAL ENGINEERING CONSULTING SERVICES

City and Engineer agree to amend their Agreement for Professional Engineering Consulting Services to include a scope of work and fees for engineering services, by adding the following terms to their Agreement.

1. **Services**. The City agrees to engage the services of the Engineer and the Engineer agrees to perform the services hereinafter set forth in connection with projects described in ***Exhibit A***.

2. **Addition to Services**. The City may add to the Engineer services or delete therefrom activities of a similar nature to those set forth in ***Exhibit A***, provided that the total cost of such work does not exceed the total cost allowance as specified in Paragraph 5 hereof. The Engineer shall undertake such changed activities only upon the direction of the City. All such directives and changes shall be in written form and prepared and approved by the City and shall be accepted and countersigned by the Engineer.

3. **Term**. The services of the Engineer shall commence as soon as practicable after the execution of this contract, unless otherwise directed in writing, and shall be undertaken and completed in such sequence as to assure their expeditious completion in the light of the purposes of the contract, but in any event, all of the services required hereunder shall be completed as set forth in the schedule for the project which is attached hereto as ***Exhibit A***.

4. **Costs not to Exceed**. The City of Joplin is limited by law with respect to the amount of money it can pay. Therefore, the City has established a fixed sum for this contract, which cannot be exceeded unless this contract is amended. The Engineer providing services hereunder shall be required to keep track of the amount of hours billable under this contract at all times; and any work in excess of the fixed sum shall not be eligible for payment. The Engineer shall notify the City if Engineer anticipates that the contract amount may be exceeded, in order to determine whether or not the City is prepared to increase the total compensation. The Engineer shall establish a billing system showing the amount of money remaining on the contract, which shall be shown in each monthly billing.

5. **Payment**.

a. **Conditioned upon acceptable performance**. The City agrees to pay the Engineer in accordance with the terms set forth in ***Exhibit A***, which shall constitute complete compensation for all services to be rendered under this contract; provided, that where payments are to be made periodically to Engineer for services rendered under this contract, the City expressly reserves the right to disapprove in whole or in part a request for payment where the services rendered during the period for which payment is claimed are not performed in a timely and satisfactory manner in accordance with the schedule and description of services set forth in ***Exhibit A***.

b. **Total compensation not to exceed**. It is expressly understood that in no event will the total compensation and reimbursement to be paid to the Engineer under the terms of this work Authorization Number **BMC-OC21-001** exceed the sum of Ninety-Six Thousand, Four Hundred Fifty and No/100 Dollars ($96,450.00).

6. **Insurance**. Without limiting any of the other obligations or liabilities of the Engineer, the Engineer shall secure and maintain at its own cost and expense, throughout the duration of this Contract and until the work is completed and accepted by the City of Joplin, insurance of such types and in such amounts as may be necessary to protect it and the interests of the City of Joplin against all hazards or risks of loss as hereunder specified or which may arise out of the performance of the Contract Documents. The form and

limits of such insurance, together with the underwriter thereof in each case, are subject to approval by the City of Joplin. Regardless of such approval, it shall be the responsibility of the Engineer to maintain adequate insurance coverage at all times during the term of the Contract. Failure of the Engineer to maintain coverage shall not relieve it of any contractual responsibility or obligation or liability under the Contract Documents.

The certificates of insurance, including evidence of the required endorsements hereunder or the policies, shall be filed with the City at the time that this contract is signed by the Engineer. All insurance policies shall provide thirty (30) days written notice to be given by the insurance company in question prior to modification or cancellation of such insurance. Such notices shall be mailed, certified mail, return receipt requested, to:

City of Joplin - Public Works, 602 S. Main, Joplin, MO 64801; and

Such policies shall name the City as an additional insured with limits of liability not less than the sovereign immunity limits for Missouri public entities calculated by the Missouri Department of Insurance as of January 1 each calendar year and published annually in the Missouri Register pursuant to Section 537.610, RSMo.
(See, http://insurance.mo.gov/industry/sovimmunity.php).

As of January 1, 2021, the minimum coverage for the insurance referred to herein shall be as set out below:

a. Workers' Compensation….Statutory coverage per RSMo 287.010 et seq.
Employer's Liability……. $1,000,000.00

b. Commercial General Liability Insurance, including coverage for Contractual Liability and Independent Contractors Liability. Such coverage shall apply to bodily injury and property damage on an "Occurrence Form Basis" with limits of Two Million Nine Hundred Forty Thousand Eight Hundred Sixty-eight and no/100 Dollars ($2,940,868.00) for all claims arising out of a single accident or occurrence and at least Four Hundred Forty-one Thousand One Hundred Thirty and no/100 Dollars ($441,130.00) with respect to injuries and/or death of any one person in a single occurrence and an amount not less than at least $1,000,000 for all claims to property arising out of a single occurrence and at least $100,000 to any one owner with respect to damages to property. Engineer agrees that the proceeds of such insurance policy shall first be used to pay any award, damages, costs, and/or attorneys' fees incurred by or assessed against City, its employees, officers and agents, before payment of any award, damages, costs or attorneys fees of Engineer, its employees, officers or agents. Engineer agrees to cause its insurer to name City as an additional insured on such insurance policy, including the City as an additional insured for coverage under its products-completed operations hazard, and said policy shall be primary and noncontributory.

c. Automobile Liability Insurance covering bodily injury and property damage for owned, non-owned and hired vehicles, with limits of at least Two Million Nine Hundred Forty Thousand Eight Hundred Sixty-eight and no/100 Dollars ($2,940,868.00) for all claims arising out of a single accident or occurrence and at least Four Hundred Forty-one Thousand One Hundred Thirty and no/100 Dollars ($441,130.00) with respect to injuries and/or death of any one person in a single accident or occurrence.

d. Errors and Omissions Insurance. The Engineer shall maintain a professional liability insurance policy in the amount of $1,000,000.00. This policy shall remain in full force and effect for a period of one year after completion and acceptance by the City of the construction of the project.

e. Subcontracts. In case any or all of this work is sublet, the Engineer shall require the subcontractor to procure and maintain all insurance required in subparagraphs (A), (B) and (C) hereof and in like amounts. Engineer shall require any and all subcontractors with whom it enters into a contract to perform work on this project to protect the City of Joplin through insurance against applicable hazards or risks and shall, upon request of the City, provide evidence of such insurance.

f. Notice. The Engineer and/or subcontractor shall furnish the City prior to beginning the work satisfactory proof of carriage of all the insurance required by this contract, with the provision that policies shall not be canceled, modified or non-renewed without thirty (30) days written notice to the City of Joplin.

g. Legislative or Judicial Changes. In the event the scope or extent of the City's tort liability as a governmental entity as described in Section 537.600 through 537.650 RSMo is broadened or increased during the term of this agreement by legislative or judicial action, the City may require Engineer, upon 10 days written notice, to execute a contract addendum whereby the Engineer agrees to provide, at a price not exceeding Engineer's actual increased premium cost, additional liability insurance coverage as the City may require to protect the City from increased tort liability exposure as the result of such legislative or judicial action. Any such

additional insurance coverage shall be evidenced by an appropriate certificate of insurance and shall take effect within the time set forth in the addendum.

7. All other terms and conditions of the original Agreement shall remain in effect.

IN WITNESS WHEREOF, the parties hereto have set their hands and seals on the day and year herein stated.

REVIEWED FOR APPROVAL

_____
Name & Title of Staff Project Manager

CERTIFICATE OF DIRECTOR OF FINANCE

I certify that the expenditure contemplated by this document is within the purpose of the appropriation to which it is to be charged and that there is an unencumbered balance of appropriated and available funds to pay therefore.

_____
Leslie Haase, Director of Finance

APPROVED AS TO FORM

_____
Peter Edwards, City Attorney

Engineer: _____

By: _____

Printed Name: _____

Title: _____

Date: _____

CITY OF JOPLIN, MISSOURI

By: _____
David Hertzberg, P.E.
Public Works Director

Date: _____

CITY OF JOPLIN
COUNCIL AGENDA ITEM

ITEM
Council Bill 2021-166 – approving an agreement and work authorization with Burns & McDonnell for professional engineering consulting services for preparing the City of Joplin's Solid Waste Masterplan.

MEETING DATE
November 1, 2021

ORIGINATING DEPARTMENT
Public Works - Engineering

ATTACHMENTS
Council Bill 2021-166 Ordinance, agreement, Work Authorization, Scoring Sheet, Submittals

REVIEWED BY
Director of Public Works: David Hertzberg; Director of Finance: Leslie Haase; City Attorney: Peter Edwards; City Manager: Nicholas Edwards.

SUMMARY
This Council Bill authorizes the City Manager or his designee to approve an agreement and work authorization with Burns & McDonnell in the not to exceed amount of Ninety-Six Thousand Four Hundred Fifty and 00/100 Dollars ($96,450.00) for professional engineering consulting services for the update of the City of Joplin's Solid Waste Masterplan.

BACKGROUND
On May 19th of this year, Staff published a Request for Qualifications for the development of a Comprehensive Solid Waste Master Plan. The City of Joplin was looking for a firm that would evaluate the current Solid Waste System including plans, contracts, trends, policies, and regulations. Moreover, as part of this evaluation process, Staff is needing to collect input data pertaining to the Solid Waste System from both stakeholders and shareholders of our city. Ultimately, Staff is looking to develop established goals, which could be strived towards and embedded within the Solid Waste Master Plan, which will benefit the community. Additional goals and plans will be developed after conducting public meetings with stakeholders and the general public in order to acquire feedback on potential solid waste issues affecting citizens and how to better provide services to them. City staff used the procurement process to request qualifications and conducted interviews with four of the firms that submitted RFQ's. The Solid Waste Advisory Committee reviewed packages after receiving the RFQ's, gave feedback to staff and voted to select Burns & McDonnell during a Special Solid Waste Commission meeting on July 28th. Staff has reviewed the qualifications and submittal by Burns and McDonnell and find them to be within industry standards.

FUNDING SOURCE
Solid Waste Fund.

RECOMMENDATION
Staff recommends adoption of this Council Bill on First Reading and moving it to Second and Third Reading.

COUNCIL BILL NO. 2021-166 ORDINANCE NO

AN ORDINANCE approving an agreement and work authorization with Burns and McDonnell in the not to exceed amount of Ninety-Six Thousand Four Hundred Fifty and 00/100 Dollars ($96,450.00) for professional engineering consulting services for preparing the City of Joplin's Solid Waste Masterplan; authorizing the City Manager or his designee to execute the same by and on behalf of the City of Joplin; amending the Annual Budget of the City of Joplin for the Fiscal Year 2021-2022 as adopted by Ordinance 2021-149 on October 18, 2021.

BE IT ORDAINED BY THE COUNCIL OF THE CITY OF JOPLIN, as follows:

Section 1. That the Work Authorization with Burns and McDonnell in the not to exceed amount of Ninety-Six Thousand Four Hundred Fifty and 00/100 Dollars ($96,450.00) for professional engineering consulting services for preparing the City of Joplin's Solid Waste Masterplan, a true and accurate copy of said work authorization being attached hereto and incorporated herein, be, and the same is hereby approved.

Section 2. That the City Manager of the City of Joplin, Missouri, or his designee, is hereby authorized and directed to execute said agreement, or agreement in substantially similar form, by and on behalf of the City of Joplin.

Section 3. That fiscal year 2021-2022 budgeted appropriations as adopted by Ordinance 2021-149 be amended by increasing appropriations in the Solid Waste Fund by the total amount of Ninety-Six Thousand Four Hundred Fifty Dollars and No Cents ($96,450.00).

Section 4. That the Director of Finance is hereby directed to make all necessary entries on the City records to show the increase in appropriations.

Section 4. That upon the final approval and acceptance of the contractor's work under said contract, in substantial conformance with the attached work authorization, in writing by the Director of Public Works and his certification to the effect to the Director of Finance, the consultant shall be paid from the Solid Waste fund.

Section 5: That the ordinance is adopted on First Reading and will be moved to Second and Third Reading.

Passed by the Council of the City of Joplin, Missouri, this _____ day of

_____, 2021 by a _____ vote.

_____

Ryan D. Stanley, Mayor

ATTEST:

_____

Barbara J. Gollhofer, City Clerk

APPROVED AS TO FORM:

_____

Peter C. Edwards, City Attorney

Council Bill 2021-166

I hereby certify that a sufficient amount is available in the Solid Waste Fund to pay the amounts called for on the basis of the negotiated fee.

_____

Leslie Haase, Director of Finance

October 25, 2021

Mr. Lynden Lawson
Assistant Director of Public Works - Operations
602 S Main Street
Joplin, Missouri 64801

Re: **Budget Proposal for a Comprehensive Solid Waste Master Plan**

Dear Mr. Lawson:

Burns & McDonnell appreciates the opportunity to work with the City of Joplin (City) on the development of a comprehensive Solid Waste Master Plan (Plan, SWMP) and an Energy Efficiency and Diversification Evaluation (Evaluation, Energy Evaluation). Per our discussions, we have developed this budget proposal for the SWMP and Energy Evaluation.

Solid Waste Management Plan Scope

The scope of work for the SWMP is outlined in the Qualifications for Development of a Comprehensive Solid Waste Master Plan submitted to the City on June 9, 2021 by Burns & McDonnell. A summary of these services includes evaluating the City's existing solid waste system, conducting community stakeholder engagement, and setting goals and priorities for the City's solid waste services necessary for an effective solid waste management system.

The following are the Scope of Work Tasks proposed to accomplish the Solid Waste Management Plan:

Task 1: Kick-off Meeting, RFI, Project Management

Task 2: Solid Waste System Evaluation

Task 3: Stakeholder Engagement

Task 4: Evaluate Options and Establish Plan Goals and Objectives (incorporated in Task 3)

Task 5: Capital Improvement Plan

Task 6: Finalize Solid Waste Master Plan and Implementation Plan

Energy Efficiency and Diversification Evaluation Scope

The purpose of the Energy Efficiency and Diversification Evaluation (Evaluation) is to review the City's operational energy use matrix and identify opportunities to reduce energy use or diversify the sources of energy utilized. Energy is produced by many different sources, including, but not limited to, wind, solar, renewable natural gas, nuclear, and fossil fuels. Diversifying the source of energy in the City's energy matrix can help to avoid emissions and produce potential economy gain. Burns & McDonnell will review the energy matrix from municipal facilities, fleet, and wastewater treatment plants (WWTP) and provide strategy recommendations to help reduce the City's reliance on fossil fuels, identify energy efficiencies and potential investments in diversification of energy uses through renewable energy options.

The following are the Scope of Work Tasks proposed to accomplish the Energy Efficiency and Diversification Evaluation:

Task 7A: Project Kick-off and Request for Information
The purpose of the kick-off meeting is to initiate the project and confirm the project scope of work, schedule, stakeholders, and review the request-for-information (RFI). The RFI will be developed by Burns & McDonnell and provided to the City prior to the Kick-off meeting). It will include information and data needed to complete the project Scope of Work.

Task 7B: Review Energy Sources from Municipal Facilities, Fleet and WWTP
Burns & McDonnell will review the City's current energy sources and usage where readily available from municipal facilities, fleet and WWTP to benchmark the current matrix. Inputs will be gathered from City provided and publicly available data from utility providers.

Task 7C: Evaluate Opportunities for Renewable Energy and Increased Efficiency
Utilizing the data from Task 2, Burns & McDonnell will perform a high-level evaluation on opportunities for increasing energy efficiency and investing in renewable energy. This will include details specific to available options for each of the three evaluation focus areas (facilities, fleet, and WWTP) based on best management practices.

Task 7D: Energy Source Evaluation Report and Renewable Energy Plan
Burns & McDonnell will compile a draft report which will include the findings of Tasks 2 and 3 as well as an implementation plan for achieving the proposed opportunities for energy efficiencies and source diversification. Further feasibility studies may be recommended based on findings. The Scope of Work includes an initial draft and a final draft to incorporate commends from City Staff.

Assumptions

- Burns & McDonnell will rely on information provided by the City as accurate without independent verification.
- Timeline of the project will depend on receipt of complete data including a list of facilities and utility usage from the City.

Budget

As your local partner, we are pleased to participate in person with the City throughout the project including for the kick-off event, meetings with staff and the Solid Waste Advisory Commission (SWAC), public open houses, and a City Council presentation. Additionally, we have limited staff located in Joplin for project support. However, understanding the evolving situation with Covid-19, we have significant experience and are prepared to adapt and shift to virtual presentations and public engagement, if requested by the City or recommended by local public health regulations. Our proposed budget, presented below, assumes that each meeting with City staff, the SWAC, and one to two sessions of a public open house will occur on the same day to minimize travel time and costs.

Task	Description	Cost
1	Kick-off Meeting, RFI, Project Management	
	Kick-off Meeting (including tour of City facilities)	$4,100
	Request for Information	$1,500
	Project Management	$6,050
2	Solid Waste System Evaluation	$5,900
3	Stakeholder Engagement	
	Two (2) Facilitated Workshop Days with Staff, SWMC, & Public Open House	$26,850
	Virtual Survey	$5,350
	Presentation to City Council	$7,850
4	Evaluate Options and Establish Plan Goals and Objectives (incorporated in Task 3)	-

5	Capital Improvement Plan	$6,950
6	Finalize Solid Waste Master Plan and Implementation Plan	$9,900
	Total for SWMP Tasks	**$74,450**
7	Energy Efficiency and Diversification Evaluation	$22,000
	Total for Tasks 1 through 7	**$96,450**

Compensation

Burns & McDonnell requests compensation on a time and materials basis not to exceed Ninety-Six Thousand Four Hundred Fifty dollars ($96,450) without written consent from the City. The basis of compensation shall be per the attached rate sheet (Appendix A).

We look forward to the opportunity to work with you on these scopes of work. Please contact Julie Davis at 816-769-1116 or jdavis3@burnsmcd.com should you have questions regarding our proposal.

Sincerely,

Laura Drescher
Project Manager

Julie Davis
Lead Consultant

Bill Halliburton
Principal

The City of Joplin released a Request for Qualifications for development of a Comprehensive Solid Waste Master plan on May 19th, 2021. We received (7) Statements of Qualifications of Qualifications by the response due date, June 9th, 2021. We received SOQs from RRT, GREDELL Engineering Resources, Inc., Tetra Tech, MSW Consultants, Burns & McDonnell, NewGen Strategies & Solutions, and Engineering Solutions & Design, Inc.

A SOQ review committee was formed that included Assistant Director of Public Works Lynden Lawson, Director of Public Works David Hertzberg, Civil Engineer I Stormwater Steven Martinez, Assistant Director of Public Works Dan Johnson, and Recycling Coordinator Lindsey James. Members individually reviewed and ranked all SOQs. On July 8th, 2021 the review committee met and combined rankings. Anonymous rankings can be seen below, with 1 being most preferred and 7 being least preferred:

	Gredell	RRT	Burns & McDonnell	MSW	NewGen	Engineering Solutions & Design, Inc	Tetra Tech
Member 1	1	3	4	2	6	5	7
Member 2	2	4	1	3	5	6	7
Member 3	1	2	3	4	5	6	7
Member 4	3	1	4	5	7	2	6
Member 5	1	5	2	3	6	4	7
TOTALS	8	15	14	17	29	23	34

Figure 1

Rankings were added up, and the selection group decided to interview companies with the 4 lowest (best) total scores: Gredell (8 points), RRT (15 points), Burns & McDonnell (14 points), and MSW (17 points). Gredell, RRT, Burns & McDonnell, and MSW were invited to interview and encouraged to create a 30-minute presentation and allow 15 minutes for questions. Interviews were conducted Thursday and Friday, July 15th and 16th. On July 16th, after all interviews, the review committee individually ranked the interviewees, with 1 being the most preferred to contract and 4 being the least preferred, as seen in Figure 2.

	Gredell	RRT	MSW	Burns & McDonnell
Member 1	2	4	3	1
Member 2	4	2	3	1
Member 3	4	2	3	1
Member 4	4	3	2	1
Member 5	4	3	2	1
TOTALS	18	14	13	5

Figure 2

Burns & McDonnell was unanimously selected as the most preferred to hire for the Solid Waste Master Plan.