Z&P Meeting: December 11, 2017
City Council Meeting: January 2nd, 2017

STAFF PLANNING REPORT
Site Plan Review

CASE 037-17 A request to review a site plan for a fast food restaurant

NAME OF PROJECT Dairy Queen

LOCATION 2015 E. 32nd St. (vacant lot located west of 2023 E. 32nd St.)

APPLICANT Reyling Design & Consulting

CORRIDOR 32nd St.

EXISTING CONDITIONS

Zoning	Land Use	Property Size
C-3-PD Planned Commercial Development	Undeveloped	36,000 sq. ft.

SITE CONTEXT

	North	East	South	West
Existing Zoning	C-3-PD	C-1-PD	C-1-PD	C-2-PD
Land Use	Offices	Bank	Retail & Offices	Retail Center

TRANSPORTATION

Streets with access	Classification	Right-of-way width
32nd St.	Arterial	85’

WILL TURNING MOVEMENTS OF THE PROPOSED USE CREATE AN UNDUE TRAFFIC HAZARD?

No. Ingress/Egress will come from a private driveway.

UTILITIES Sanitary sewer is located along 32nd St. Other utilities are located nearby.

FLOOD PLAIN This property is not located within the flood plain.

DISCUSSION

This Site Plan Review is for the construction of a new fast food restaurant. The proposed restaurant footprint is approximately 2,600 sq. ft. and will contains 70 seats. The site plan contains adequate off-street parking and the proposed landscaping plans meets the requirements of our code.

ENCLOSURES

Application
Site Plan
Landscaping Plan
Building Elevations

Staff recommends approval of Case 037-17.

GENERAL SITE NOTES:

ALL CONSTRUCTION SHALL BE PERFORMED IN ACCORDANCE WITH THE LATEST CITY OF JOPLIN AND THE MISSOURI DEPARTMENT OF TRANSPORTATION CODES, STANDARDS AND SPECIFICATIONS.

ANY CITY OF JOPLIN INFRASTRUCTURE (ABOVE OR BELOW GRADE, VISIBLE OR NOT) OR PROPERTY DAMAGED AS A RESULT OF CONSTRUCTION SHALL BE REPAIRED BY THE CONTRACTOR TO THE SATISFACTION OF THE CITY.

ALL CONSTRUCTION SHALL CONFORM TO THE APPLICABLE LOCAL, STATE, AND FEDERAL CODE REQUIREMENTS. WHEN CODES ARE IN CONFLICT, THE MORE STRINGENT SHALL APPLY.

ALL SIGNAGE AND PAVEMENT MARKINGS SHALL COMPLY WITH THE LATEST EDITION OF THE MANUAL ON UNIFORM TRAFFIC CONTROL DEVICES (MUTCD), OR AS OTHERWISE SPECIFIED. INSTALLATION OF ALL SIGNS SHALL BE GOVERNED BY LOCAL CODES.

THE CONTRACTOR IS RESPONSIBLE TO HAVE ALL EXISTING UTILITIES LOCATED AND PROTECTED DURING CONSTRUCTION. THE CONTRACTOR SHALL NOTIFY THE UTILITY PROTECTION CENTER AT LEAST THREE (3) DAYS PRIOR TO ANY SITE WORK FOR IDENTIFICATION OF EXISTING UTILITIES.

THE CONTRACTOR SHALL VERIFY ALL DIMENSIONS AT THE PROJECT SITE BEFORE BEGINNING CONSTRUCTION.

CIVIL SITE KEY NOTES:

1. PROPOSED 6" PCC BARRIER CURB, SEE DETAIL.
2. PROPOSED ACCESSIBLE PARKING STALL STRIPING AND SIGNAGE. SEE DETAIL.
3. EXISTING ROADWAY AND CURB TO REMAIN – PROTECT IN PLACE.
4. PROPOSED PIPE BOLLARD, SEE DETAIL.
5. PROPOSED 4" WIDE PARKING STALL STRIPING AND WHITE PAVEMENT MARKING, TRAFFIC WHITE PAINT PER DETAIL. SEE PLAN FOR TYPICAL DIMENSIONS.
6. PROPOSED PEDESTRIAN ACCESS, CONTRASTING PAVEMENT PER ADA STANDARDS.
7. PROPOSED TRASH RECEPTACLE.
8. CONTRACTOR TO SAWCUT EXISTING PAVEMENT TO MAKE SMOOTH TRANSITION TO NEW PARKING LOT PAVEMENT.
9. PROPOSED PCC CURB TAPER TO MATCH PAVEMENT AND/OR SIDEWALK GRADE.
10. PROPOSED DETECTABLE WARNING (TRUNCATED DOMES) TO MEET ADA STANDARDS, SEE DETAIL. PROPOSED FLUSH PCC SIDEWALK TO PAVEMENT.
11. PROPOSED TRASH/RECYCLNG ENCLOSURE WITH PIPE BOLLARDS. SEE ARCHITECTURAL AND STRUCTURAL PLANS FOR DETAILS.
12. PROPOSED OUTDOOR CONCRETE PATIO AREA.
13. PROPOSED PARKING LOT LIGHTING. SEE SITE LIGHTING PLAN FOR DETAILS.
14. PROPOSED CONCRETE SIDEWALK, CONTRACTOR SHALL CONSTRUCT TO MEET CURRENT ADA STANDARDS.
15. PROPOSED CONCRETE PARKING BLOCK, SEE DETAIL.
16. PROPOSED PATIO HANDRAIL, SEE ARCHITECTURAL PLANS FOR DETAILS.
17. PROPOSED PYLON SIGN, SEE ARCHITECTURAL PLANS FOR DETAILS.
18. PROPOSED DRIVE THRU ENTRANCE SIGN, SEE ARCHITECTURAL PLANS FOR DETAILS.
19. PROPOSED CLEARANCE BAR AND SIGN, SEE ARCHITECTURAL PLANS FOR DETAILS.
20. PROPOSED PREVIEW BOARD, SEE ARCHITECTURAL PLANS FOR DETAILS.
21. PROPOSED SPEAKER AND LOOP INDICATOR SYSTEM, SEE ARCHITECTURAL PLANS FOR DETAILS.
22. PROPOSED DRIVE THRU MENU BOARD, SEE ARCHITECTURAL PLANS FOR DETAILS.
23. PROPOSED LANDSCAPING, SEE LANDSCAPE PLAN FOR DETAILS.
24. PROPOSED LARGE ORDER PARKING AND TRUCK LOADING AND UNLOADING AREA.
25. PROPOSED PATIO LIGHTING. SEE SITE LIGHTING PLAN FOR DETAILS.
26. PROPOSED EXIT AND DO NOT ENTER SIGN, SEE ARCHITECTURAL PLANS FOR DETAILS.

SITE PAVING LEGEND:

- PROPOSED PCC CONCRETE SIDEWALK (6"PCC/4" AB), SEE DETAIL
- PROPOSED PCC CONCRETE PAVEMENT (6"PCC/4" AB), SEE DETAIL
- PARKING LOT-PROPOSED ASPHALT (5" AC/6" AB), SEE DETAIL
- PROPOSED LANDSCAPE AND GRASS AREA, SEE LANDSCAPE PLAN
- PROPOSED DETECTABLE WARNING SURFACE, SEE DETAIL

HORIZ. SCALE: 1" = 20'

0 10 20 40

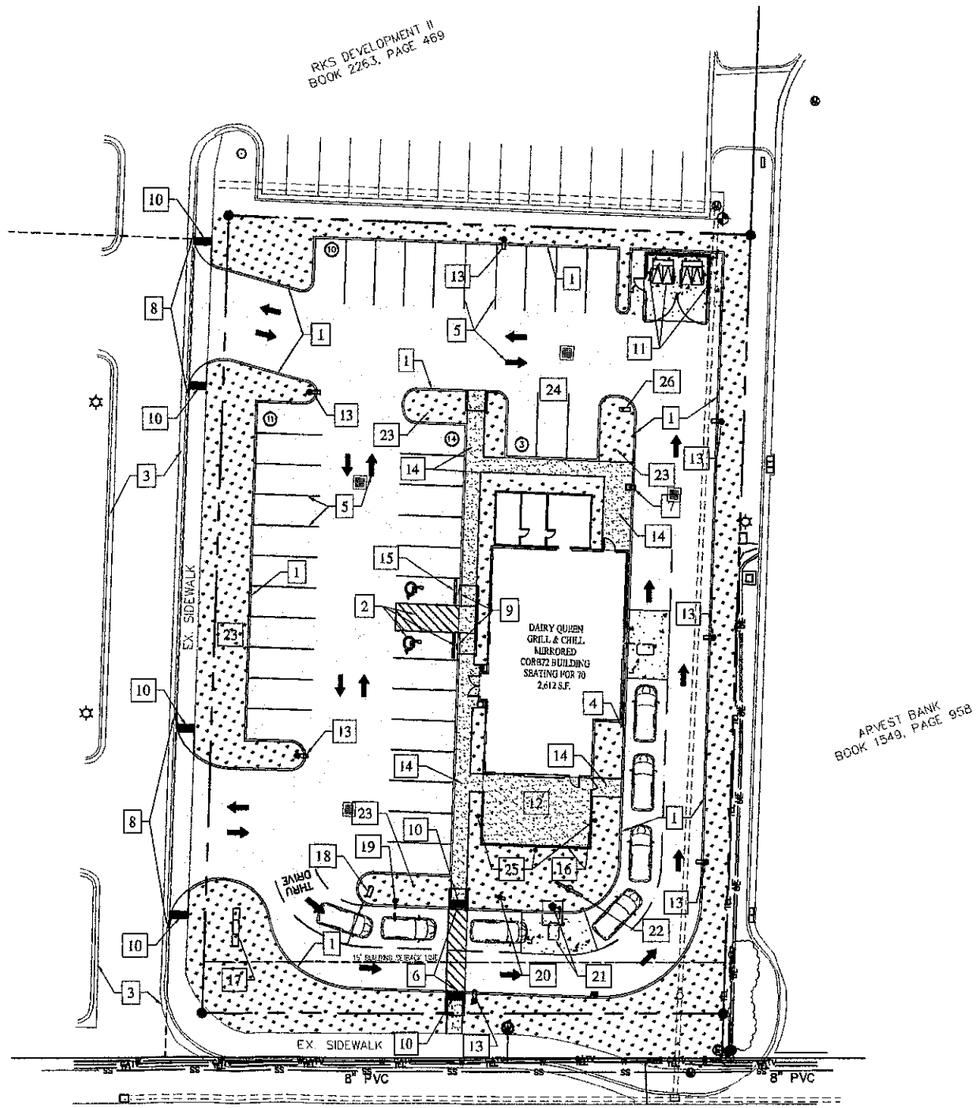

Architect:
JSO
JOHN S. ODOM, ARCHITECT
93 MEADOWBROOK COUNTRY CLUB ESTATES
BALLWIN, MISSOURI 63011
PH. 1.417.343.2902
WWW.JOHNSODOM.COM
E-MAIL: JOHN@JOHNSODOM.COM

Civil Engineer:
RDC
REYLING DESIGN & CONSULTING
4516 Boardwalk | Smithton, IL | 62285
reylingdc@gmail.com

Missouri Firm License: 2018012869
MO Certificate of Authority: LC001485066

STATE OF MISSOURI
TODD JEFFREY REYLING
NUMBER PE-2011020072
PROFESSIONAL ENGINEER

LICENSE EXPIRES - 12.31.2017
DATE SIGNED - 10.31.2017

ENGINEER OF RECORD:
Todd J. Reyling, PE
Missouri PE 2011020072

ISSUED / REVISED	DATE
ISSUED TO CITY	10.31.2017

PROJECT NUMBER: 17-158

New Ground Up Building:
DAIRY QUEEN

2015 E 32nd Street
Joplin, Missouri 64804
Jasper County

Civil Site Plan

C200

GENERAL SITE NOTES:

ALL CONSTRUCTION SHALL BE PERFORMED IN ACCORDANCE WITH THE LATEST CITY OF JOPLIN AND THE MISSOURI DEPARTMENT OF TRANSPORTATION CODES, STANDARDS AND SPECIFICATIONS.

ANY CITY OF JOPLIN INFRASTRUCTURE (ABOVE OR BELOW GRADE, VISIBLE OR NOT) OR PROPERTY DAMAGED AS A RESULT OF CONSTRUCTION SHALL BE REPAIRED BY THE CONTRACTOR TO THE SATISFACTION OF THE CITY.

ALL CONSTRUCTION SHALL CONFORM TO THE APPLICABLE LOCAL, STATE, AND FEDERAL CODE REQUIREMENTS. WHEN CODES ARE IN CONFLICT, THE MORE STRINGENT SHALL APPLY.

ALL SIGNAGE AND PAVEMENT MARKINGS SHALL COMPLY WITH THE LATEST EDITION OF THE MANUAL ON UNIFORM TRAFFIC CONTROL DEVICES (MUTCD), OR AS OTHERWISE SPECIFIED. INSTALLATION OF ALL SIGNS SHALL BE GOVERNED BY LOCAL CODES.

THE CONTRACTOR IS RESPONSIBLE TO HAVE ALL EXISTING UTILITIES LOCATED AND PROTECTED DURING CONSTRUCTION. THE CONTRACTOR SHALL NOTIFY THE UTILITY PROTECTION CENTER AT LEAST THREE (3) DAYS PRIOR TO ANY SITE WORK FOR IDENTIFICATION OF EXISTING UTILITIES.

THE CONTRACTOR SHALL VERIFY ALL DIMENSIONS AT THE PROJECT SITE BEFORE BEGINNING CONSTRUCTION.

HORIZONTAL CONTROL NOTES

CONTRACTOR SHALL VERIFY ALL DIMENSIONS AT PROJECT SITE PRIOR TO BEGINNING CONSTRUCTION AND NOTIFY THE ENGINEER OF DISCREPANCIES.

ALL DIMENSIONS ARE TO FACE OF CURB/EDGE OF PAVEMENT UNLESS OTHERWISE NOTED.

ALL PARKING LOT CURB RADII ARE DIMENSIONED TO THE BACK OF CURB.

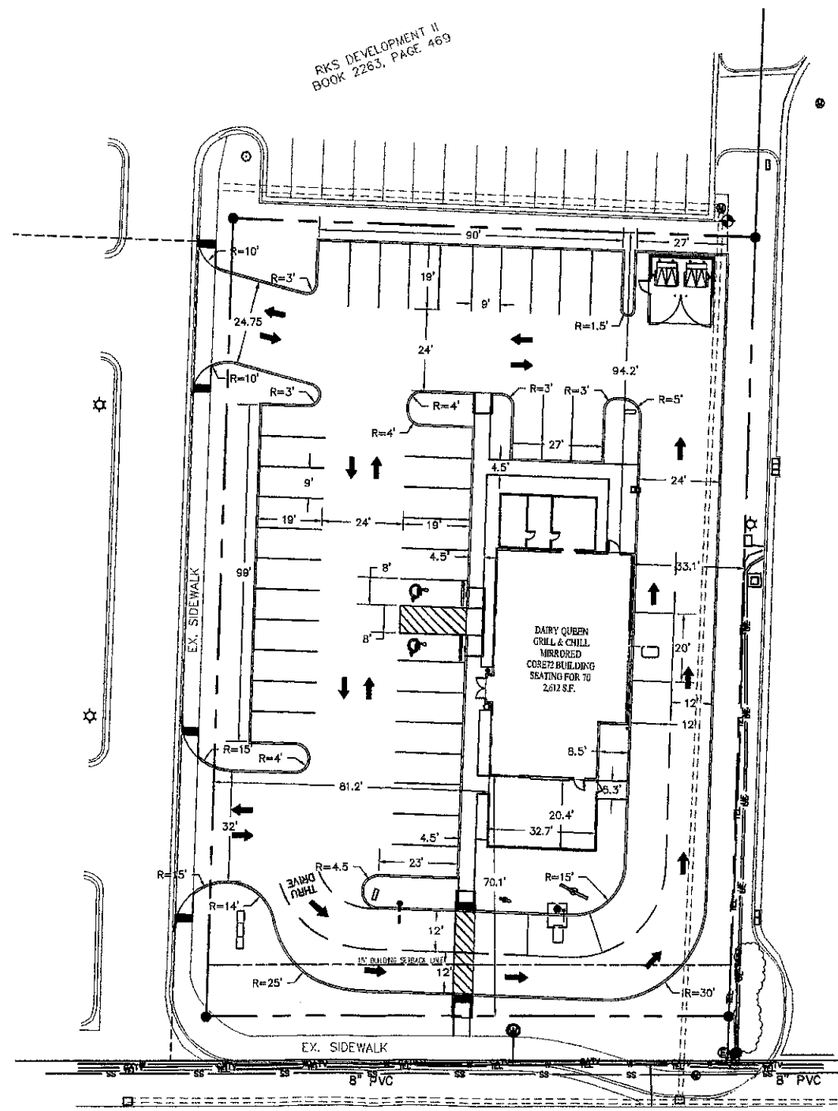

HORIZ. SCALE: 1" = 20'

0 10 20 40

Architect:

JSO

JOHN S. ODOM, ARCHITECT
99 MEADOWBROOK COUNTRY CLUB ESTATES
BALLWIN, MISSOURI 63011
PH. (417)343-2602
WWW.JOHNSODOM.COM
E-MAIL: JOHN@JOHNSODOM.COM

Civil Engineer:

REYLING DESIGN & CONSULTING

4516 Boardwalk | Smithton, IL | 62285
reylingdc@gmail.com

Missouri Firm License: 2016012669
MO Certificate of Authority: LC001485056

STATE OF MISSOURI
TODD JEFFREY REYLING
NUMBER PE-2011020072
PROFESSIONAL ENGINEER

LICENSE EXPIRES - 12.31.2017
DATE SIGNED - 10.31.2017

ENGINEER OF RECORD:
Todd J. Reyling, PE
Missouri PE 2011020072

ISSUED / REVISED	DATE
ISSUED TO CITY	10.31.2017

PROJECT NUMBER: 17-158

New Ground Up Building:
DAIRY QUEEN

2015 E 32nd Street
Joplin, Missouri 64804
Jasper County

Civil Site Plan
Horizontal
Control

C201

GENERAL PLANTING NOTES

1. PRIOR TO BEGINNING ANY WORK ON THE SITE, THE CONTRACTOR SHALL CONTACT THE OFFICE OF THE OWNER AND THE ARCHITECT/LANDSCAPE ARCHITECT FOR SPECIFIC INSTRUCTIONS RELEVANT TO THE SEQUENCING OF WORK.

2. LANDSCAPE CONTRACTOR SHALL PROVIDE ALL LABOR, MATERIALS AND SERVICE NECESSARY TO FURNISH AND INSTALL PLANTINGS AS SPECIFIED HEREIN AND AS SHOWN ON THESE PLANS.

3. NO MATERIAL SUBSTITUTIONS SHALL BE MADE WITHOUT THE OWNER'S APPROVAL. ALTERNATE MATERIALS OF SIMILAR SIZE AND CHARACTER MAY BE CONSIDERED IF SPECIFIED PLANT MATERIALS CANNOT BE OBTAINED. LANDSCAPE ARCHITECT RESERVES THE RIGHT TO REVISE PLANT LIST AS DEEMED NECESSARY.

4. ALL PLANT LOCATIONS ARE APPROXIMATE, ADJUST AS NECESSARY TO AVOID CONFLICTS.

5. QUANTITIES OF MATERIALS SHOWN ON THE PLANTING PLAN TAKE PRECEDENCE OVER QUANTITIES SHOWN ON THE PLANT MATERIAL SCHEDULE. LANDSCAPE CONTRACTOR SHALL BE RESPONSIBLE FOR VERIFYING ALL QUANTITIES ON THE PLANTING PLAN.

6. CONTRACTOR SHALL LOCATE ALL UTILITIES BEFORE WORK. LOCATE EXACT UTILITY LOCATIONS BY CONTACTING THE LOCAL UTILITY LOCATOR SERVICE. THE CONTRACTOR WILL BE RESPONSIBLE FOR THE REPAIR OF ANY DAMAGE HE MAY CAUSE TO UTILITIES.

7. GENERAL CONTRACTOR SHALL PROVIDE 4" OF TOPSOIL AT ALL SOD AND PLANTING AREAS. GRADE SHALL BE ADJUSTED FOR SOD THICKNESS. ALL FINISH GRADING SHALL BE PERFORMED BY THE LANDSCAPE CONTRACTOR.

8. SOD TYPE SHALL BE LOCALLY AVAILABLE TALL FESCUE BLEND OR OTHER TURF GRASS RECOMMEDED FOR THE SPECIFIC AREA.

9. BACKFILL FOR PLANT EXCAVATIONS TO BE CLEAN NATURAL SOIL, EXCAVATED FROM PLANTING PITS MIXED WITH COMPOST AND WELL-ROTTED MANURE AT A RATIO OF THREE (3) PARTS SOIL TO ONE (1) PART COMPOST AND WELL-ROTTED MANURE.

10. FERTILIZE ALL PLANTS WITH 6-10-4 COMMERCIAL FERTILIZER AS DIRECTED BY INSTRUCTIONS ON FERTILIZER.

11. AFTER PLANTING IS COMPLETED, REPAIR INJURIES TO ALL PLANTS AS REQUIRED. LIMIT AMOUNT OF PRUNING TO A MINIMUM NECESSARY TO REMOVE DEAD OR INJURED TWIGS AND BRANCHES. PRUNE IN SUCH A MANNER AS NOT TO CHANGE NATURAL HABIT OR SHAPE OF PLANT. MAKE CUTS FLUSH, LEAVING NO STUBS.

12. ALL LANDSCAPE EDGING IS TO BE A 4" X 3/16" PAINTED STEEL EDGING. PLACE EDGING FLUSH WITH GRADE.

13. INSTALL SHREDDED HARDWOOD MULCH IN ALL PLANT BEDS AND TREE SAUCERS. PLACE 3"-4" OF MULCH IN ALL PLANT BEDS AND TREE SAUCERS.

14. PLANTING BEDS RECEIVING MULCH ARE TO BE FREE OF WEEDS AND GRASS. TREAT BEDS WITH A PRE-EMERGENT HERBICIDE PRIOR TO MULCH PLACEMENT. APPLY IN ACCORDANCE WITH STANDARD TRADE PRACTICE.

15. THE CONTRACTOR SHALL PROVIDE ALL WATER, WATERING DEVICES AND LABOR NEEDED TO IRRIGATE PLANT MATERIALS UNTIL ACCEPTANCE OF THE PROJECT'S PLANT MATERIALS. THE CONTRACTOR SHALL SUPPLY ENOUGH WATER TO MAINTAIN THE PLANT'S HEALTHY CONDITION.

16. RE-ESTABLISH TURF IN AREAS DISTURBED BY GRADING OR UTILITY TRENCHING IN THE R.O.W.

17. REESTABLISH TURF IN ALL AREAS DISTURBED BY THE CONSTRUCTION PROCESS AND WITHIN THE LIMITS OF DISTURBANCE BY SEED, SOD OR PLANNED PLANTING AREAS, AS NOTED ON PLAN.

18. REPORT ANY DISCREPANCIES IN THE PLANTING PLAN TO THE OWNER'S REPRESENTATIVE PRIOR TO STARTING CONSTRUCTION.

19. TURF AND PLANTING BEDS ARE TO BE IRRIGATED BY AN AUTOMATIC SPRINKLER SYSTEM. SEE SHEET LS-2.

LEGEND

SOD/TURF

CONCRETE

UTILITIES SHOWN REPRESENT THE BEST INFORMATION AVAILABLE FOR DESIGN. ADDITIONAL UTILITIES MAY BE PRESENT ON THIS PROJECT. THE CONTRACTOR SHALL BE RESPONSIBLE FOR DETERMINING THE EXACT LOCATION, DEPTH AND SIZE OF ALL UNDERGROUND UTILITIES PRIOR TO CONSTRUCTION. THE CONTRACTOR SHALL BE LIABLE FOR ANY DAMAGE CAUSED BY THE FAILURE TO DO SO.

LANDSCAPE CODE CALCULATIONS

PARKING LOT LANDSCAPING REQUIREMENTS

Parking Lot Trees Required
38 Total stalls / 20 spaces = 1.9 or say 2 trees required

2 trees provided

Parking Lot Screening Required
155 LF / 50 = 3.1 or say 3 trees required

3 trees provided

PLANT SCHEDULE

TAG	QTY.	COMMON NAME	BOTANICAL NAME	SIZE	COND.	REMARKS
		SHADE TREES				
OCM	3	OCTOBER GLORY MAPLE	ACER RUBRUM 'OCTOBER GLORY'	2" CAL.	B & B	
SMH	2	SHADEMASTER HONEYLOCUST	GLEDITSIA TRIACANTHOS VAR. INERMIS 'SHADEMASTER'	2" CAL.	B & B	
		ORNAMENTAL TREE				
SSC	1	SPRING SNOW CRABAPPLE	MALUS X SPRING SNOW	2" CAL.	B & B	
		DECIDUOUS SHRUBS				
GMS	6	GOLDMOUND SPIREA	SPIREA X BUMALDI 'GOLDMOUND'	3 GAL	CONT.	
PCM	3	PECOS CRAPE MYRTLE	LAGERSTROEMIA INDICA 'PECOS'	5 GAL	CONT.	
RDR	8	RED DRIFT ROSE	ROSA MEIGALPIO	3 GAL	CONT.	
		EVERGREEN SHRUBS				
GCJ	24	GOLDCOAST JUNIPER	JUNIPERUS X PFITZERIANA 'GOLD COAST'	3 GAL	CONT.	
WGB	39	WINTERGREEN BOXWOOD	BUXUS MICROPHYLLA VAR. 'WINTERGREEN'	3 GAL	CONT.	
FPN	20	FIREPOWER NANDINA	NANDINA DOMESTICA 'FIREPOWER'	3 GAL	CONT.	
		ORNAMENTAL/NATIVE GRASSES				
AMG	3	ADAGIO MAIDEN GRASS	MISCANTHUS SINENSIS 'ADAGIO'	2 GAL	CONT.	
BAG	38	BLONDE AMBITION GRAMA GRASS	BOUTELOUA GRACILIS 'BLONDE AMBITION'	1-2 GAL	CONT.	
		PERENNIALS				
BBL	37	BIG BLUE LIRIOPE	LIRIOPE MUSCARI 'BIG BLUE'	4" - 1 GAL	CONT.	

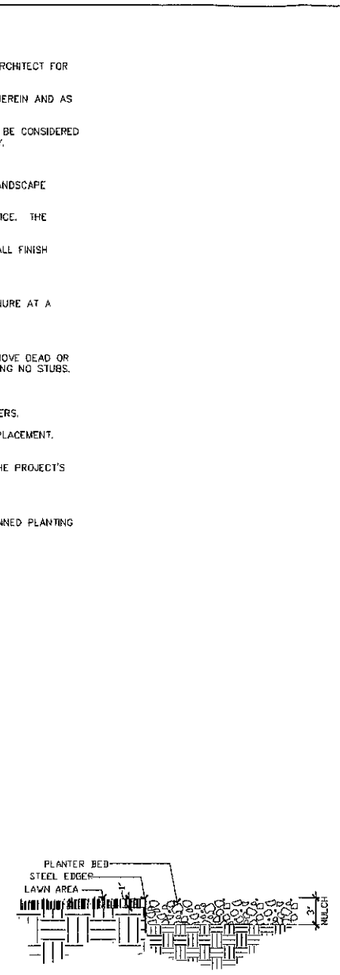

1 EDGER DETAIL — NO SCALE

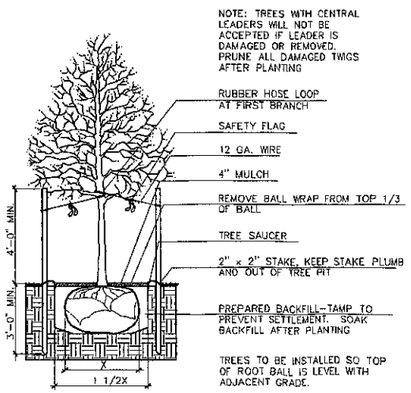

2 TREE PLANTING DETAIL — IN TURF AREAS — NO SCALE

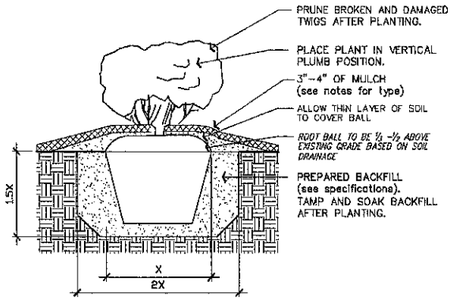

3 SHRUB PLANTING DETAIL — NO SCALE

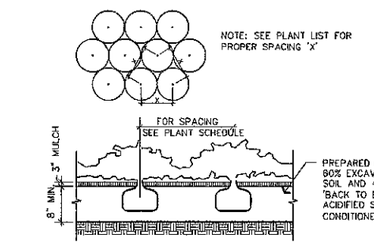

4 GROUND COVER DETAIL — NO SCALE

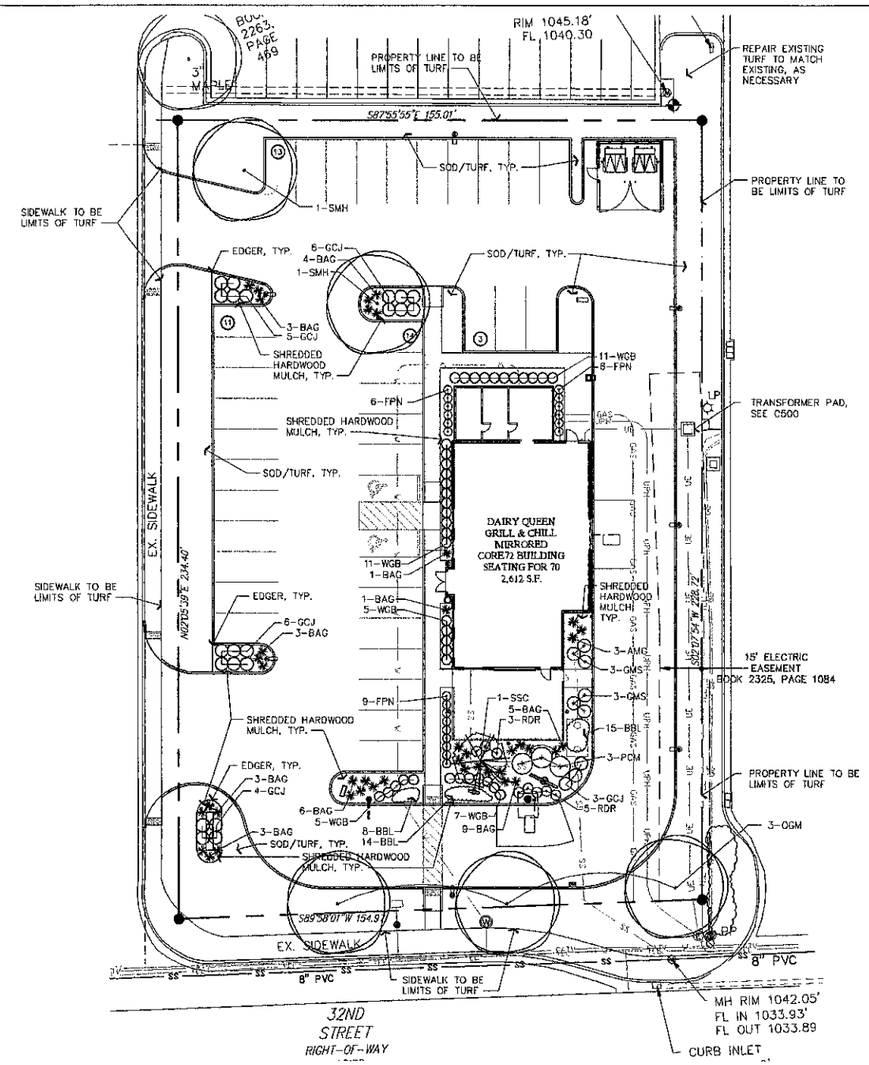

PLANTING PLAN

1" = 20'-0"

North

Issued/Revised	Date

New Ground Up Building:
DAIRY QUEEN
2015 E. 32nd Street
Joplin, Missouri

STATE OF MISSOURI
TERI ANDREAS FARHA
NUMBER PLA-2007001663
1-03-17
REGISTERED LANDSCAPE ARCHITECT

TERI FARHA, PLA
LANDSCAPE ARCHITECT
Wichita, KS 67218
PH. 620-262-7268

PLANTING PLAN

DATE
November 3, 2017

LS1

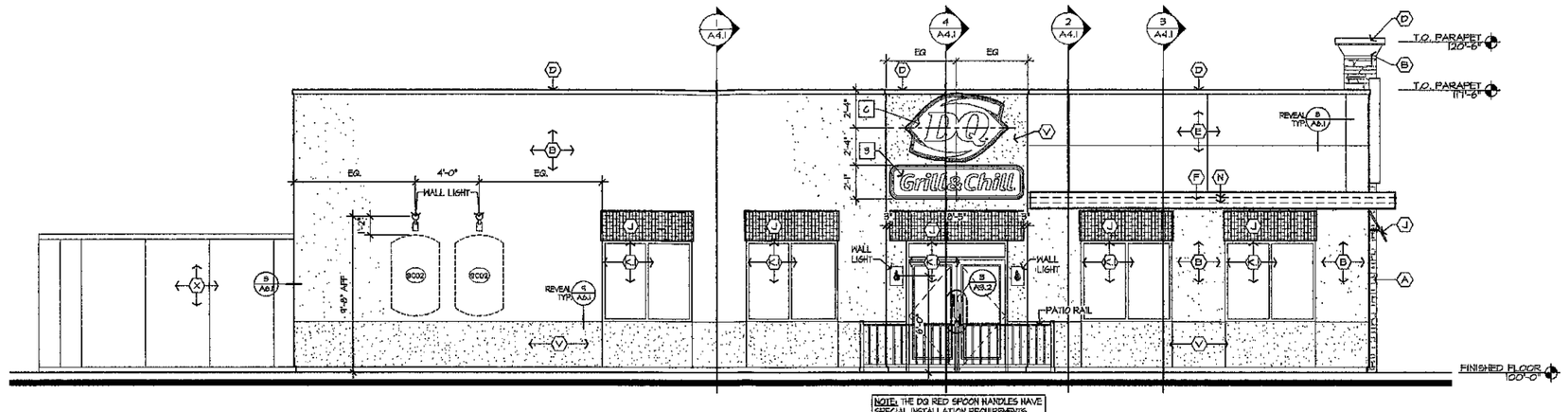

1 A3.1 ENTRANCE ELEVATION

SCALE: 1/4" = 1'-0"

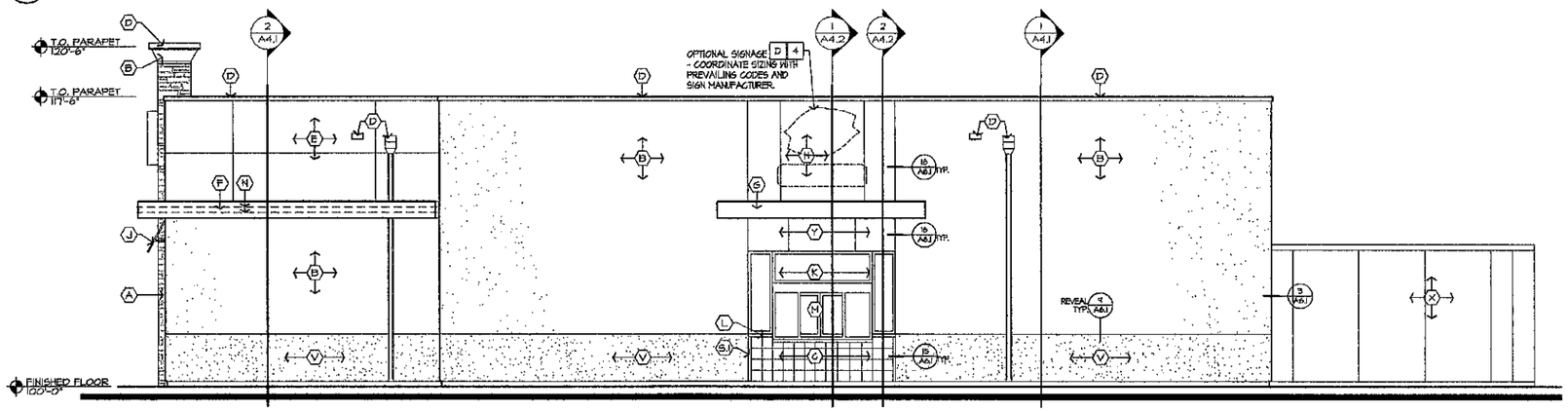

2 A3.1 DRIVE-THRU ELEVATION

SCALE: 1/4" = 1'-0"

EXTERIOR ELEVATION KEYNOTES: (GRILL & CHILL) STD

(A) STONE CHIMNEY:
MFGR: CULTURED STONE BY BORAL
STYLE: COUNTRY LEDGE STONE - WET STACK
COLOR: CHARDONNAY 20006
SUPPLIER: CULTURED STONE BY BORAL
GROUT: GREY

(B) EIFS:
MFGR: STO CORPORATION
COLOR: NAH-0034 (MATCHES BENJAMIN MOORE SANDY BROWN #1046)
FINISH: 306 STO MEDIUM SAND
VENDOR: STO CORPORATION
NOTE: PROVIDE HIGH IMPACT EIFS FROM GRADE TO 3'-0" A.F.F.

(C) CERAMIC TILE D.T. WAINSCOT:
MFGR: INTERCERAMIC
SERIES: LIPSTICK
COLOR: BOMBANELLI RED
SIZE: 8"x8"
GROUT: "LATICRETE"
GROUT COLOR: ALMOND #65
SUPPLIER: HJC
NOTE: MUST BE INSTALLED PER TILE COUNCIL OF NORTH AMERICA "W244E-04" AND ANSI "A118.4"

(D) COPING & SCUPPERS:
MFGR: UNA-CLAD
MAT.: 24 GA. STEEL
COLOR: ALMOND
FINISH: KYNAR 500

(E) METAL PANEL:
MFGR: ALPOLIC
STYLE: 3MM
COLOR: DQ RED
NOTE: MUST BE INSTALLED HORIZONTALLY. REFERENCE ARROWS ON BACK OF PANEL MUST BE ALIGNED IN THE SAME DIRECTION.
VENDOR: NU LOOK EXTERIORS

(F) METAL EYEBROW & FLASHING:
MFGR: UNA-CLAD
STYLE: .040 ALUMINUM
COLOR: MATTE BLACK
FINISH: KYNAR 500
VENDOR: NU LOOK EXTERIORS

(G) METAL CANOPY & FLASHING:
MFGR: UNA-CLAD
STYLE: .040 ALUMINUM
COLOR: CLEAR ANODIZED SATIN
VENDOR: NU LOOK EXTERIORS

(H) METAL PANEL:
MFGR: ALPOLIC
MATERIAL: 3MM
COLOR: DQ BLUE
VENDOR: NU LOOK EXTERIORS

(J) FABRIC AWNING:
MFGR: COOL PLANET AWNING
MATERIAL: SUNBRELLA
COLOR: JOCKEY RED
FRAME: 1"x1" ALUMINUM (WELD ALL JOINTS, GRIND SMOOTH)
FINISH: ANODIZED CLEAR SATIN
VENDOR: COOL PLANET AWNING OR HJC

(K) STOREFRONT:
MFGR: YKK AP AMERICA INC.
STYLE: 2"x4 1/2"
FINISH: CLEAR SATIN ANODIZED ALUMINUM
GLAZING: CLEAR, 1" INSULATED, LOW E

(K) STOREFRONT:
MFGR: YKK AP AMERICA INC.
STYLE: 2"x4 1/2"
FINISH: DARK BRONZE SATIN ANODIZED ALUMINUM
GLAZING: CLEAR, 1" INSULATED, LOW E

(L) WINDOW SILL FLASHING:
MFGR: YKK AP AMERICA INC.
FINISH: ANODIZED CLEAR SATIN
SIZE: 2" AS REQD BY LOCATION

(M) DRIVE-THRU WINDOW:
MFGR: QUIKSERV
MATERIAL: ALUMINUM
FINISH: ANODIZED CLEAR SATIN
VENDOR: K. HASSERSTROM & SONS

(N) STRIP LIGHTING:
MFGR: MORGAN HOPE
STYLE: LED-Flex WITH BLACK TRACK
MODEL: LED-HH-120V-EB (BLUE LED)
VENDOR: HJC
NOTE: MUST BE INSTALLED PER MANUFACTURERS REQUIREMENTS

(Q) TRASH ENCLOSURE SOLID COLOR STAIN:
MFGR: BENJAMIN MOORE
COLOR: SANDY BROWN #1046
PRODUCT: ARBORCOAT WATERBORNE SOLID DECK & SIDING STAIN #6440
PRIMER: SELF PRIMING ON MOST SURFACES (SEE TECH. DATA SHEET FOR DETAILS)

(S) TRANSITION TRIM:
SIZE: 1 1/2"D. x2"W. HAT CHANNEL
FINISH: CLEAR SATIN ANODIZED ALUMINUM

(T) PAINT SERVICE DOOR & FRAME:
MFGR: BENJAMIN MOORE
COLOR: SANDY BROWN #1046
PRODUCT: AURA EXTERIOR PAINT LOW LUSTRE #634
PRIMER: FIRST COAT - AURA EXTERIOR PAINT LOW LUSTRE #634

(V) EIFS:
MFGR: STO CORPORATION
COLOR: NAH-0034 (MATCHES BENJAMIN MOORE ALGONQUIN TRAIL #1055)
FINISH: 306 STO MEDIUM SAND
VENDOR: STO CORPORATION
NOTE: PROVIDE HIGH IMPACT EIFS FROM GRADE TO 3'-0" A.F.F.

(X) WALK-IN COOLER/FREEZER:
MFGR: NORLAKE
COLOR: PREFINISHED FROM MANUFACTURER TO MATCH BUILDING
VENDOR: HASSERSTROM
NOTE: SEE EQUIPMENT SCHEDULE FOR DETAILS

(Y) BREAK METAL CLOSURE:
MFGR: UNA-CLAD
FINISH: CLEAR SATIN ANODIZED ALUMINUM
VENDOR: NU LOOK EXTERIORS

NEW BUILDING FOR:

JOPLIN, MISSOURI
STORE #44987

AMERICAN DAIRY QUEEN
MINNEAPOLIS, MN U.S.A.
*REGISTERED U.S. PATENT OFFICE. AMERICAN DAIRY QUEEN CORPORATION. THIS DRAWING, ITS DESIGN DETAIL AND INVENTION ARE THE PROPERTY OF AMERICAN DAIRY QUEEN INC. (ADQ) AND SHALL NOT BE COPIED IN ANY MANNER NOR DISCLOSED TO ANY OUTSIDE PARTY WITHOUT ADQ CONSENT.

MISSOURI ARCHITECT LICENSE NUMBER
A-2009027291

SPECIAL NOTICES
In the event the client consents to, allows, authorizes or approves of changes to any plans, specifications or other construction documents, and these changes are not approved in writing by the design professional, the client recognizes that such changes and the results thereof are not the responsibility of the design professional. Therefore, the client agrees to release the design professional from any liability arising from the construction, use or result of such changes. In addition, the client agrees to the fullest extent permitted by law, to indemnify and hold the design professional harmless from any damage, liability or cost (including reasonable attorney's fees and costs of defense) arising from such changes. Copyright © 2017 by John S. Odom, Architect. All rights reserved. No part of this drawing may be reproduced by photocopy or by any other means, or stored, processed, or transmitted in or by any computer or other systems without the prior written permission of the Architect

ISSUE DATE: 10-24-17
REVISION DATE:
10-24-17 ORIGINAL ISSUE
1
2

ELEVATIONS

SHEET NUMBER:
A3.1

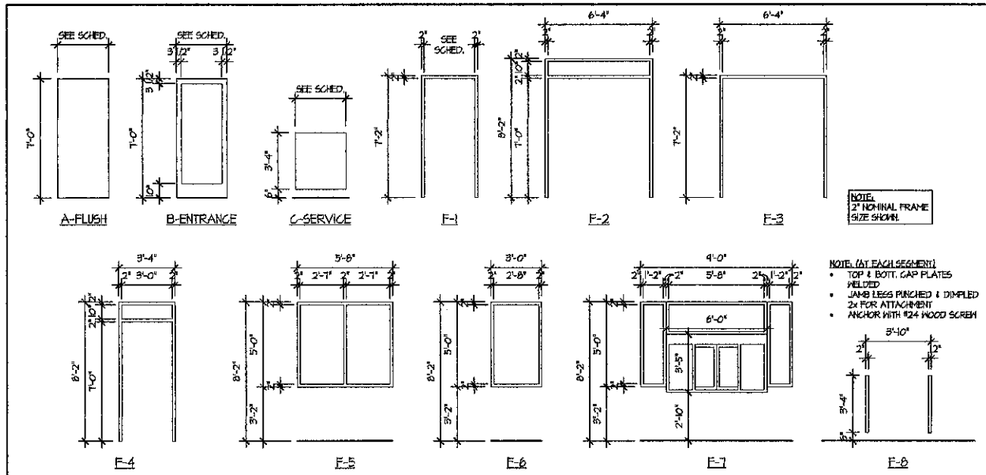

OPENING SCHEDULE

NATIONAL ACCOUNT DOOR AND FRAME SUPPLIER (FLAM, WOOD AND H.M.)
HAMILTON PARKER, SEE NATIONAL VENDORS LIST

OPNG. NO.	OPENING LOCATION	DOOR/WINDOW SIZE	DOOR/WINDOW TYPE	DOOR/WINDOW MATERIAL	DOOR/WINDOW FINISH	FRAME TYPE	FRAME MATERIAL	FRAME FINISH	FIRE RATING	HARDWARE GROUP	NOTES:
100A	VESTIBULE (EXT.)	(2) 3'-0" x 7'-0" x 1 3/4"	B	ALUM.	BRONZE	F2	ALUM.	BRONZE	-	E1	
100B	VESTIBULE (INT.)	(2) 3'-0" x 7'-0" x 1 3/4"	B	ALUM.	BRONZE	F3	ALUM.	BRONZE	-	E2	MOUNT BOTTOM OF DOOR FRAME LEVEL WITH TOP OF FLOOR TILE
101A	DINING ROOM	5'-8" x 5'-0"				F5	ALUM.	BRONZE	-		-
101B	DINING ROOM	5'-8" x 5'-0"				F5	ALUM.	BRONZE	-		-
101C	DINING ROOM	5'-8" x 5'-0"				F5	ALUM.	BRONZE	-		-
101D	DINING ROOM	5'-8" x 5'-0"				F5	ALUM.	BRONZE	-		-
101E	DINING ROOM	5'-8" x 5'-0"				F5	ALUM.	BRONZE	-		-
101F	TO PATIO	3'-4" x 8'-2" x 1 3/4"	B	ALUM.	BRONZE	F4	ALUM.	BRONZE	-	E3	-
102	WOMENS	3'-0" x 7'-0" x 1 3/4"	A	P.C.	PLAM	F1	H.M.	PAINT	-	R2	UNDERCUT BY 1". - PLAM; WILSONART LIMBER MAPLE 10734-60
103	MENS	3'-0" x 7'-0" x 1 3/4"	A	P.C.	PLAM	F1	H.M.	PAINT	-	R2	UNDERCUT BY 1". - PLAM; WILSONART LIMBER MAPLE 10734-60
104	DRIVE THRU	4'-0" x 5'-0"				F1	ALUM.	CLEAR	-	-	-
106	OFFICE	3'-0" x 7'-0" x 1 3/4"	A	P.C.	PLAM	F1	H.M.	PAINT	-	O	UNDERCUT BY 1". - PLAM; WILSONART LIMBER MAPLE 10734-60
107	SERVICE	3'-6" x 7'-0" x 1 3/4"	A	H.M.	PAINT	F1	H.M.	PAINT	-	S1	SEE EXTERIOR ELEVATIONS FOR COLOR
108	OPTIONAL EXT. GATE	3'-6" x 5'-4"	C	GALV.	PAINT	F8	H.M.	PAINT	-	S2	SEE A1.3 SHEET FOR OPTIONAL OUTDOOR STORAGE ENCLOSURE

NOTES:
1. PARTICLE CORE DOORS: SIZE AS PER PLAN AND SCHEDULE. ALL EDGES/SURFACES TO BE COVERED WITH PLASTIC LAMINATE.
2. HOLLOW METAL DOORS): SIZE AS PER PLAN AND SCHEDULE. (HOT ROLLED LEVEL 2 MODEL 2) STEEL TO BE 18 Ga., INTERIOR TO BE FOAM INSULATION, WITH INTEGRAL REINFORCEMENT FOR CLOSURE AND PANIC HARDWARE.

ALUM = ALUMINUM
HM = HOLLOW METAL
PC = PARTICLE CORE
BRZ = ANODIZED ALUMINUM STATUTORY BRONZE FINISH
CLR = ANODIZED ALUMINUM CLEAR FINISH
PNT = SEE INTERIOR ELEVATIONS AND FINISH SCHEDULE FOR COLOR

HARDWARE GROUPS

NATIONAL ACCOUNT DOOR HARDWARE
HAMILTON PARKER, SEE NATIONAL VENDORS LIST

GROUP #E1: TYPICAL EXTERIOR VESTIBULE DOORS
HARDWARE PART OF DOOR MANUFACTURERS PACKAGE
- CLOSER: HAGER MFG., MODEL #5200 SPR CSH CLOSER.
- HINGES: HAGER MFG., MDL #BB1194 32DB WITH NON-REMOVABLE PINS, 4.5"x4.5"x0.180" THK., (4) HINGES PER LEAF.
- KEYED CYLINDERS: HAGER MFG., MDL# 3902 MORTISE CYLINDER, PROVIDE (2) KEYS PER DOOR, ALL CYLINDERS KEYED ALIKE. (MOUNTED AT 34" AFF, COORDINATE W/ SPOON HANDLE)
- SPOON HANDLE (PROVIDED & INSTALLED BY ALUM. STOREFRONT CONTRACTOR, AVAILABLE FROM H.C. SEE ADG NATIONAL VENDORS LIST)
- PUSH BAR: HAGER MFG., 1305
- SWEEP: HAGER MFG., MDL #8015B, MIL ALUM FINISH, SIZED TO FIT DOOR WIDTH.
- THRESHOLD: HAGER MFG., MDL. #412 S, MIL ALUM FINISH, SIZED TO FIT DOOR OPENING WIDTH.
- WEATHERSTRIPPING:

1. THE G.C. TO PROVIDE DOOR SIGNAGE STATING "THIS DOOR TO REMAIN UNLOCKED DURING BUSINESS HOURS" (SINGLE LINE HORIZONTAL SIGN PREFERRED)
2. THE DQ RED SPOON HANDLES HAVE SPECIAL INSTALLATION REQUIREMENTS. ALUMINUM STOREFRONT MANUFACTURER MUST COORDINATE LOCK & HANDLE HEIGHTS.

GROUP #S1: TYPICAL REAR SERVICE DOOR
- CLOSER: HAGER MFG. MODEL #5200 SPR CSH CLOSER.
- EXIT DEVICE: HAGER MFG., MDL #4701 RIM US28, SPRAYED ALUMINUM FINISH.
- HINGE(S): HAGER MFG., MDL #SCBB 1100 US26D WITH NON-REMOVABLE HINGE PINS, 4.5" X 4.5" X 0.134" THK., (4) HINGES PER LEAF.
- KICK PLATE: HAGER MFG., MDL #ARMOR PLATE, 40"W X 20"H X 0.05" THK.
- PROTECTOR, TRIM: HAGER., MFG., MDL #HD2250
- PULL: HAGER MFG., MDL#4.83D, (EXTERIOR SIDE OF DOOR).
- SWEEP: HAGER MFG., MDL #8015 V, MIL ALUM FINISH, SIZED TO FIT DOOR WIDTH.
- THRESHOLD: HAGER MFG., MDL #412S, MIL ALUM FINISH, SIZED TO FIT DOOR OPENING WIDTH.
- VIEWER: HAGER MFG., 1756 US26D, 200 DEGREE VIEW (FACTORY INSTALLED).
- WEATHERSTRIPPING: HAGER MFG., MDL #8415 V, MIL ALUM FINISH, SIZED TO FIT DOOR.
- EXIT ALARM: EAX BATTERY POWERED DOOR MOUNTED WEATHERIZED EXIT ALARM, EAX-DOOR

GROUP #S2: (TYPICAL INSTALLATION AT EXT. ENCLOSURE).
- SPRING HINGE(S): HAGER MFG., MDL #1150 32D, 4.5" X 4.5" X 0.180" THK., (2) HINGES PER LEAF.
- PASSAGE SET: HAGER 3810 26D
- DOOR MUTES

GROUP #R2: TYPICAL RESTROOM DOOR
- CLOSER: HAGER MFG. MODEL #5200 CLOSER.
- HINGES: HAGER MFG., MDL #SCBB 1100 US26D, 4.5" X 4.5" X 0.134" THK., (3) HINGES PER LEAF.
- KICK PLATE: HAGER MFG., MDL#409 18 Ga. 34"W X 10"H X 0.05" THK. (MOUNTING HOLES PREDRILLED AT FACTORY, INSTALLED ON PUSH SIDE OF DOOR).
- STOP, DOOR: HAGER MFG., MDL #2324 32D, BRUSHED CHROME, 2 1/2" DIA, WALL MOUNT.
- 4x16 PUSH PLATE
- FULL HANDLE: HAGER 3E320

GROUP #E2: TYPICAL INTERIOR VESTIBULE DOORS
HARDWARE PART OF DOOR MANUFACTURERS PACKAGE
- CLOSER: HAGER MFG. MODEL #5200 SPR CSH CLOSER.
- HINGE(S), HAGER MFG., MDL. #BB1194 32DB WITH NON-REMOVABLE HINGE PINS, 4.5" X 4.5" X 0.180" THK., (4) HINGES PER LEAF.
- PUSH/PULL: HAGER MFG., MDL#1460 LH COMBO 32DB, & MDL#1460 RH COMBO 32DB.
- FLOOR STOP: HAGER 241F 26D DOME LOW STOP, (1) PER LEAF

GROUP #E3: TYPICAL EXTERIOR PATIO/EGRESS DOOR
HARDWARE PART OF DOOR MANUFACTURERS PACKAGE
- CLOSER: HAGER MFG. MODEL #5200 SPR CSH CLOSER.
- DEAD BOLT: ADAMS RITE MS1850S
- HINGE(S), HAGER MFG., MDL #BB1191 32DB WITH NON-REMOVABLE HINGE PINS, 4.5" X 4.5" X 0.180" THK., (4) HINGES PER LEAF.
- KEYED CYLINDERS: HAGER MFG., MDL# 3402 MORTISE CYLINDER, PROVIDE (2) KEYS PER DOOR, ALL CYLINDERS KEYED ALIKE. (MOUNTED AT 34" AFF, COORDINATE W/ SPOON HANDLE)
- SPOON HANDLE (PROVIDED & INSTALLED BY ALUM. STOREFRONT CONTRACTOR, AVAILABLE FROM H.C. SEE ADG NATIONAL VENDORS LIST)
- PUSH BAR: HAGER MFG., 130
- SWEEP: HAGER MFG., MDL #8015B, MIL ALUM FINISH, SIZED TO FIT DOOR WIDTH.
- THRESHOLD: HAGER MFG., MDL #4125, MIL ALUM FINISH, SIZED TO FIT DOOR OPENING WIDTH.
- WEATHERSTRIPPING:

1. THE G.C. TO PROVIDE DOOR SIGNAGE STATING "THIS DOOR TO REMAIN UNLOCKED DURING BUSINESS HOURS" (SINGLE LINE HORIZONTAL SIGN PREFERRED)
2. THE DQ RED SPOON HANDLES HAVE SPECIAL INSTALLATION REQUIREMENTS. ALUMINUM STOREFRONT MANUFACTURER MUST COORDINATE LOCK & HANDLE HEIGHTS.

GROUP #O: TYPICAL OFFICE DOOR
- CLOSER: HAGER MFG. MODEL #5200 CLOSER.
- HINGE(S), HAGER MFG., MDL #SCBB 1100 US26D, 4.5" X 4.5" X 0.134" THK., (3) HINGES PER LEAF.
- KICK PLATE: HAGER MFG., MDL#406 18 Ga. 34"W X 10"H X 0.05" THK. (MOUNTING HOLES PREDRILLED AT FACTORY, INSTALLED ON PUSH SIDE OF DOOR).
- STOP, DOOR: HAGER MFG., MDL #2324 32D, BRUSHED CHROME, 2 1/2" DIA, WALL MOUNT.
- LOCKSET: 3555 US26D-WITHHELL (KEYED)

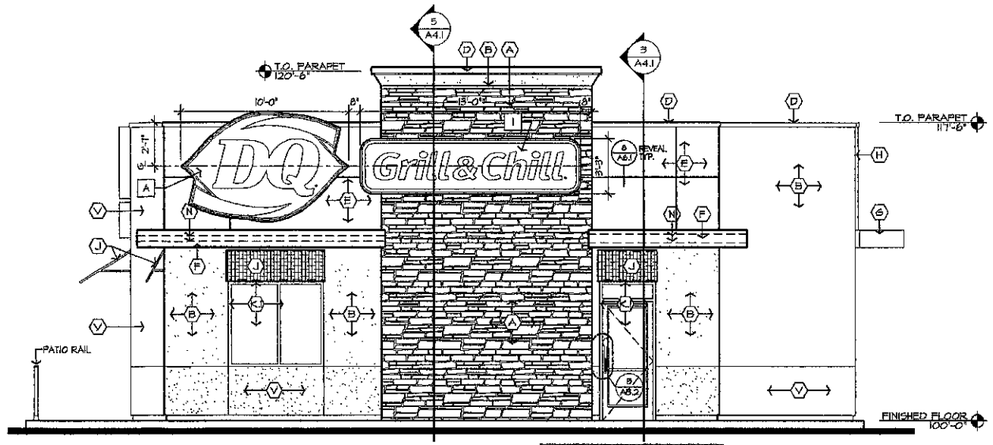

1 A3.2 **FRONT ELEVATION**
SCALE: 1/4" = 1'-0"

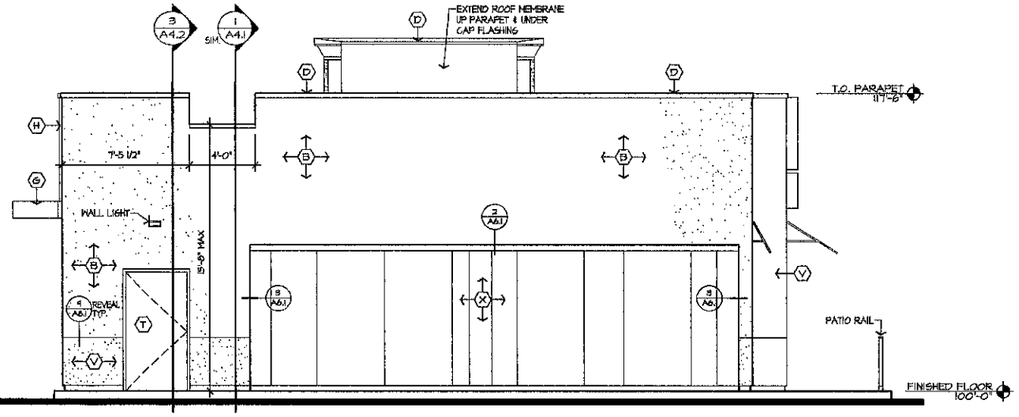

2 A3.2 **REAR ELEVATION**
SCALE: 1/4" = 1'-0"

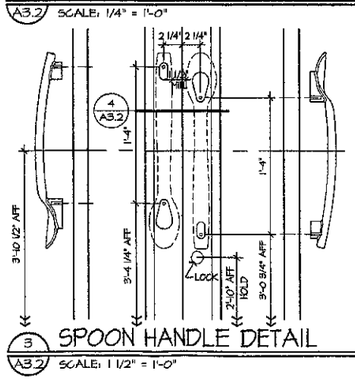

3 A3.2 **SPOON HANDLE DETAIL**
SCALE: 1 1/2" = 1'-0"

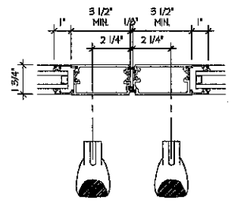

4 A3.2 **SPOON HANDLE DETAIL**
SCALE: 3" = 1'-0"

NEW BUILDING FOR:
DQ Grill & Chill
JOPLIN, MISSOURI
STORE #14587

AMERICAN DAIRY QUEEN
MINNEAPOLIS, MN U.S.A.
*REGISTERED U.S. PATENT OFFICE. AMERICAN DAIRY QUEEN CORPORATION. THIS DRAWING, ITS DESIGN DETAIL AND INVENTION ARE THE PROPERTY OF AMERICAN DAIRY QUEEN (A.D.Q.) AND SHALL NOT BE COPIED IN ANY MANNER NOR DISCLOSED TO ANY OUTSIDE PARTY WITHOUT ADQ CONSENT.

MISSOURI ARCHITECT LICENSE NUMBER
A-2008027291

SPECIAL NOTICES
In the event the client consents to, allows, authorizes or approves of changes to any plans, specifications or other construction documents, and these changes are not approved in writing by the design professional, he does recognize that such changes and the results thereof are not the responsibility of the design professional. Therefore, the client agrees to release the design professional from any liability arising from the construction, use or result of such changes. In addition, the client agrees to the fullest extent permitted by law, to indemnify and hold the design professional harmless from any damage, liability or cost (including reasonable attorney's fees and costs of defense) arising from such changes. Copyright © 2017 by John S. Odom, Architect. All rights reserved. No part of this drawing may be reproduced by photocopy or by any other means, or stored, processed, or transmitted in or by any computer or other systems without the prior written permission of the Architect

ISSUE DATE: 10-24-17
REVISION DATE:
10-24-17 ORIGINAL ISSUE
1
2

ELEVATIONS, DOOR & FRAME TYPES

SHEET NUMBER:
A3.2