CITY OF JOPLIN
COUNCIL AGENDA ITEM

ITEM
Council Bill 2020-602: authorizing the City of Joplin to enter into a first amendment to memorandum of understanding with the Wildcat Glades Friends Group, a Missouri Nonprofit Corporation ("Friends Group") for the purpose of establishing responsibilities in maintaining and operating Wildcat Park.

MEETING DATE
January 21, 2020

ORIGINATING DEPT
Parks

ATTACHMENTS
CB2020-602 Ordinance; Exhibit A: City-Friends Group Amendment to MOU; Exhibit B: City-Friends Group MOU

REVIEWED BY
Dept. Head: Paul Bloomberg; City Attorney: Peter Edwards; Interim City Manager: Dan Pekarek

SUMMARY
This Council Bill authorizes the City to enter into a first amendment to MOU with the Friends Group for the purpose of establishing responsibilities in maintaining and operating Wildcat Park.

BACKGROUND
In 2019, the City, MDC, and Friends Group entered into a series of MOUs concerning Wildcat Park. Although the Friends Group shares space with MDC, the Friends Group has discovered that it regularly has scheduling conflicts with MDC. Similarly, the Friends Group has found that it does not have sufficient work space for its volunteers. Accordingly, the Friends Group desires to construct an education cottage consistent with the drawings attached hereto. The Friends Group is solely responsible for the cost of any such improvements, including construction, maintenance, repair, and operational costs after completion. At no cost to City, any such improvements, including fixtures, shall become City's property when this Agreement is terminated. In the alternative, at no cost to City, City may require the Friends Group to demolish and remove any such improvements when this Agreement is terminated, to be completed within one (1) year of termination.

FUNDING SOURCE
N/A

RECOMMENDATION
Staff recommends adoption of this Council Bill on a non-emergency basis.

MEMORANDUM OF UNDERSTANDING

This memorandum of understanding (herein "MOU") is made on this 3rd day of June, 2019, by and between the Wildcat Glades Friends Group, a Missouri Nonprofit Corporation (hereinafter referred to as "Friends"), and the City of Joplin, a Missouri Municipal Corporation (hereinafter referred to as "City").

WHEREAS, City owns Wildcat Park (hereinafter referred to as "Park"), a map of which is attached hereto and incorporated by reference as Exhibit A; and

WHEREAS, Friends is a Missouri Nonprofit Corporation formed by citizens of the Joplin, MO area in early 2018; and

WHEREAS, Friends' purpose is "To protect the area known as Wildcat Park and the surrounding chert glade environment, habitat, and wildlife by promoting awareness and sustainability, providing education and recreation space and programs, and sponsoring nature-based activities."

NOW, THEREFORE, in consideration of the mutual promises set forth herein and for the other good and valuable consideration, the receipt and sufficiency of which is hereby acknowledged, Friends and City agree as follows:

1. Responsibilities of Friends. Friends will assist City in maintaining and operating the Park, including but not limited to:

a. Friends will screen and train any volunteers. Furthermore, any volunteers will be required to sign a Volunteer Agreement, attached hereto and incorporated by reference as Exhibit B.

b. Trail Stewardship. Friends will assist City in the maintenance and operation of the

EXH. A

trail system including but not limited to maintaining the path and adjacent landscaping (approximately two (2) feet on either side of the trail) where it is reasonably practical and safe to do so, and keeping the same clear of obstruction, such as trash, vegetation, etc. Friends will immediately notify the City of any dangerous condition on the trail and will not attempt to remedy the same.

c. Water Festival. Friends has agreed to assume primary responsibility for the Water Festival, which is an event held in early August and provides educational and recreational activities for the public. Friends and City agree to make a good faith effort to work together to assure the safety of the attendees and the success of the event.

d. Pavilion. Friends agrees to maintain the pavilion, including cleaning and removal of recycling and trash. Friends is permitted to rent the pavilion for a reasonable amount in order to cover the costs associated with these responsibilities.

e. Ball Fields. Friends and City agree to make a good faith effort to work together to facilitate future events and programming in the park area currently occupied by the ball fields.

2. Responsibilities of City. City will bear primary responsibility in maintaining and operating the Park.

3. Term. The term of this MOU shall be for a period of one (1) year from the date hereof. This MOU shall automatically renew for up to four (4) successive one (1) year terms upon the same terms, covenants, and conditions as herein specified.

4. Insurance. Friends shall provide liability insurance during the term of this Agreement, issued by an insurance company authorized to do business in the State of Missouri, covering City, its agents, employees, and invitees, and naming City as an additional insured, in the amount of One Million Dollars ($1,000,000.00) for Combined Single Limit for Personal Injury or Property

Damage. Such insurance shall be evidenced by filing with the City an Insurance Certificate, naming City as an additional insured under such policy, and providing that such policy shall not be cancelled without thirty (30) days written notice to City. Friends agrees to indemnify and hold and save harmless the City from any and all damages, claims, and assessments of every type and character arising from Friends' activities at or in any way related to the Park.

5. Nature of Relationship. Friends shall perform as an independent contractor and shall not hold itself out to third parties as an agent of City. Friends shall not be considered an agent of City nor shall any of the employees, agents, officers, members, or other personnel of Friends be considered sub-agents of City.

6. Termination. Either party may terminate this MOU at any time by giving ninety (90) days' written notice to the other party.

7. Notices. All notices, requests, and demands to or upon the parties of the MOU shall be deemed to have been given or made when delivered by hand or via certified mail addressed as follows or to other such addresses as may be hereafter designated in writing:

City: City of Joplin
602 S. Main St.
Joplin, MO 64801

Friends: Wildcat Glades Friends Group
P.O. Box 3063
Joplin, MO 64803

8. Amendments. This Agreement contains all of the agreements and conditions made between the parties and may only be modified by written agreement signed by all parties to this Agreement.

9. Assignment. This Agreement shall not be assignable by Friends without the express written consent of City being first obtained.

10. Choice of Law. This Agreement has been made, and its validity, performance, and effect shall be determined, in accordance with the laws of the State of Missouri, and venue for

litigation between the parties shall be solely and exclusively in the Circuit Court of Jasper County, Missouri, or the United States District Court for the Western District of Missouri.

11. Compliance with the Law. Friends agrees to comply with all applicable laws in connection with the performance of this MOU.

12. Severability: The invalidity, illegality, or unenforceability of any provision of this MOU shall not affect the validity, legality, or enforceability of the other provisions of this MOU which shall remain effective.

IN WITNESS WHEREOF, this Memorandum of Understanding has been executed and approved and is effective and operative as to each of the parties as herein provided.

City of Joplin, Missouri

By: Daniel Pekarek
Daniel Pekarek, Interim City Manager

ATTEST:

By: Barbara J. Gollhofer
Barbara J. Gollhofer, City Clerk

Wildcat Glades Friends Group

By: Steve Geardea
(Print) Steve Geardea
(Title) President

ATTEST:

By: Robin Standridge
(Print) Robin Standridge
(Title) Executive Director

FIRST AMENDMENT TO
MEMORANDUM OF UNDERSTANDING AND AGREEMENT

This First Amendment to Memorandum of Understanding and Agreement ("Agreement") is made and entered into this ____ day of February, 2020, by and between the City of Joplin, Missouri, a Municipal Corporation (hereinafter "City") and Wildcat Glades Friends Group, a Missouri Nonprofit Corporation (hereinafter "Friends"), with the City and Friends being referred to collectively as the "parties."

WHEREAS, City and Friends entered into a Memorandum of Understanding and Agreement effective June 3, 2019, wherein City and Friends established respective responsibilities concerning Wildcat Park; and

WHEREAS, Friends desires to make improvements to Wildcat Park, and the parties desire to establish their respective rights concerning said improvements;

NOW, THEREFORE, in consideration of the mutual agreements set forth below, and other good and valuable consideration, the parties do hereby agree as follows:

1. 6. Termination, is hereby amended by changing the notice requirement from ninety (90) days to one hundred twenty (120) days.

2. The Agreement is hereby amended to establish a new paragraph 13 as follows:

"13. Improvements to the Real Estate. Friends is authorized to make improvements to the real estate. These improvements will generally consist of the construction of an education cottage building, consistent with the drawings attached hereto and incorporated by reference as Exhibit C. Friends is solely responsible for the cost of any such improvements, including construction, maintenance, repair, and operational costs after completion. City will have the right to enter any such improvements at reasonable times to inspect the same upon seventy-two (72) hours written notice to Friends. In the event of an emergency situation, City may enter without prior notice to or the consent of Friends. At no cost to City, any such improvements, including fixtures, shall become City's property when this Agreement is terminated. In the alternative, at no cost to City, City may require Friends to demolish and remove any such improvements when this Agreement is terminated, to be completed within one (1) year of termination."

3. The Agreement is hereby amended to establish a new paragraph 14 as follows:

"14. Personal property. At City's direction, Friends is authorized to store and use personal property at Wildcat Park, in and on the improvements. Friends will maintain ownership of any such personal property. Friends agrees to remove any such personal property from Wildcat Park within thirty (30) days of termination. If Friends fails or refuses to remove any such personal

property from Wildcat Park within thirty (30) days of termination, at no cost to City, said property will become City's property."

4. The Agreement is hereby amended to establish a new paragraph 15 as follows:

"15. Hold Harmless. Friends acknowledges and agrees that City makes no representations or warranties regarding Wildcat Park, including whether it is suitable for use as described in Exhibit C or any other purpose. Friends agrees to hold City harmless against and from any and all loss, suits, causes of action, proceedings, costs, damages, liabilities, and expenses arising from or related to this Memorandum of Understanding and Agreement, including use as described in Exhibit C."

5. All other terms, conditions and requirements of the Memorandum of Understanding and Agreement shall remain in full force and effect, except as modified by this Amendment.

6. This document may be signed in separate counterparts by the parties and the signed counterparts, taken together, shall be deemed to constitute an executed original of this document.

CITY OF JOPLIN:	**WILDCAT GLADES FRIENDS GROUP:**
By:_____	By:_____
Name:_____	Name:_____
Title:_____	Title:_____
Date:_____	Date:_____

STRUCTURAL GENERAL NOTES
DIVISION 1 – GENERAL REQUIREMENTS

1. THESE DRAWINGS INCLUDING THE INFORMATION CONTAINED HEREON SHALL REMAIN THE PROPERTY OF FALL RIVER HOLDINGS, LLC., WORLDWIDE STEEL BUILDINGS, AND VAN DEURZEN AND ASSOCIATES, P.A. AND ARE PROVIDED SOLELY FOR ERECTING THE BUILDING DESCRIBED IN THE APPLICABLE PURCHASE ORDER AND SHALL NOT BE MODIFIED, REPRODUCED OR USED FOR ANY OTHER PURPOSE WITHOUT PRIOR WRITTEN CONSENT OF FALL RIVER HOLDINGS, LLC., WORLDWIDE STEEL BUILDINGS, AND VAN DEURZEN AND ASSOCIATES, P.A.
2. THE GENERAL CONTRACTOR AND/OR ERECTOR SHALL BE SOLELY RESPONSIBLE FOR GOOD QUALITY WORKMANSHIP IN ERECTING THIS BUILDING IN CONFORMANCE WITH THESE DRAWINGS, DETAILS REFERENCED ON THESE DRAWINGS, WORLDWIDE STEEL BUILDING ERECTION MANUAL AND INDUSTRY STANDARDS PERTAINING TO PROPER ERECTION, INCLUDING THE CORRECT USE OF TEMPORARY BRACING.
3. THE CONTRACTOR AND/OR ERECTOR SHALL EXAMINE ACTUAL JOB CONDITIONS AND BE RESPONSIBLE FOR VERIFYING ALL DIMENSIONS AND ELEVATIONS SHOWN ON THESE ERECTION PLANS WITH THOSE SHOWN ON THE CONTRACT DOCUMENTS. IF ERRORS, OMISSIONS OR DISCREPANCIES ARE FOUND THEY SHALL BE REPORTED TO VAN DEURZEN AND ASSOCIATES, P.A. BEFORE PROCEEDING WITH THE WORK.
4. INSTALLATION OF ADEQUATE TEMPORARY BRACING FOR USE UNTIL CONSTRUCTION IS COMPLETE IS THE RESPONSIBILITY OF THE ERECTOR.
5. EXACT LOCATION OF WINDOWS, OVERHEAD DOORS, AND WALK DOORS SHALL BE DETERMINED DURING BUILDING ERECTION. TRUSSES AND DIAGONAL BRACING SHALL NOT BE MOVED TO INSTALL WINDOWS, OVERHEAD DOORS, AND WALK DOORS.
6. CONCRETE GROUT, ANCHOR BOLTS, AND ANY OTHER EMBEDDED ITEMS ARE TO BE FURNISHED BY OTHERS.
7. ANCHOR BOLT DIAMETERS WERE DETERMINED BY ALLOWABLE SHEAR AND TENSION PER AISC SPECIFICATIONS (FY = 36 KSI). ANCHOR BOLT LENGTH AND METHOD OF TRANSFERRING FORCES FROM ANCHOR BOLTS TO FOOTINGS ARE TO BE DETERMINED BY OTHERS.
8. DESIGN LOADS AND REACTIONS ARE FURNISHED ON THIS DRAWING.
9. FOUNDATION MUST BE LEVEL, SQUARE, AND SMOOTH. ANCHOR BOLTS MUST BE ACCURATELY PLACED AS SHOWN ON THIS DRAWING OR STEEL WILL NOT FIT.
10. ALL BOLTS TO BE SAE J429 GRADE 5 – BOLTS SHALL BE TIGHTENED IN ACCORDANCE WITH THE "SPECIFICATION FOR STRUCTURAL JOINTS USING ASTM A325 OR A490 BOLTS" SUBSECTION TITLED "TURN-OF-NUT TIGHTENING".
11. STRUCTURAL STEEL ANGLES AND WEB MEMBERS RODS ARE ASTM A572 GRADE 50, SIZES ARE NOTED ON SHOP DRAWINGS. SHOP DRAWINGS ARE NOT PROVIDED WITH THE ERECTION SET UNLESS REQUESTED.
12. WIND RODS ARE 1/2"ø ASTM A572 GRADE 50 (UNLESS NOTED OTHERWISE) WITH ENDS THREADED, DOUBLE WHERE NOTED ON PLANS/ELEVATIONS
13. MISCELLANEOUS PLATE ARE ASTM A36
14. WIND AND TRUSS CHORD BRACING ARE AN INTEGRAL PART OF THE STRUCTURAL SYSTEM AND MUST BE PROPERLY INSTALLED PRIOR TO ERECTION OF WALL AND ROOF SHEETS. REMOVAL OR ALTERATION OF WALL BRACING AND TRUSS CHORD BRACING WITHOUT PRIOR AUTHORIZATION IS PROHIBITED.
15. BUILDING SUBFRAMING:

    ALL LIGHT GAUGE FRAMING SHALL CONFORM TO THE REQUIREMENTS OF ASTM A653 GRADE 50 WITH A MINIMUM YIELD STRESS OF 50000 PSI.

    a. GIRTS: 3 5/8" x 1 5/8" x 20ga
    b. PURLINS: 6" x 1 5/8" x 20ga

BUILDING CODE	2012 IBC/ASCE 7-10
DESIGN LOADS	
ROOF LIVE	20 PSF Reduced Per ASCE 7-10 Sec 4.8
ROOF DEAD (COLLATERAL)	10 PSF (2 PSF + SELF WEIGHT + 5 PSF SOLAR)
ROOF SNOW LOAD	30 PSF
GROUND SNOW LOAD	43 PSF (UNHEATED)
WIND	
BASIC WIND SPEED	115 MPH (Vult)
EXPOSURE	C
RISK CATEGORY	II

	COLUMN GRID A		COLUMN GRID B	
	HORIZONTAL REACTION (lbs)	VERTICAL REACTION (lbs)	HORIZONTAL REACTION (lbs)	VERTICAL REACTION (lbs)
DEAD LOAD	70	2723	-70	2723
ROOF LIVE LOAD	57	3532	-57	3532
SNOW LOAD	-26	6338	26	6338
Wind 0° - Neg (MWFRS Load Case A)	-217	-4270	-903	-1987
Wind 0° - Pos (MWFRS Load Case A)	-699	-2320	-594	-1381
Wind 180° - Neg (MWFRS Load Case A)	861	-1857	240	-4287
Wind 180° - Pos (MWFRS Load Case A)	552	-1250	721	-2337
Wind 90° - Neg (MWFRS Load Case B)	783	-2907	-465	-1936
Wind 90° - Pos (MWFRS Load Case B)	679	-2146	-362	-1175
Wind 270° - Neg (MWFRS Load Case B)	465	-1936	-783	-2907
Wind 270° - Pos (MWFRS Load Case B)	362	-1175	-679	-2146
LIVE LOAD (ADDITIONAL)	0	0	0	0

Notes:
1. ALL REACTIONS ARE UNFACTORED
2. NO REACTIONS PROVIDED FOR ENDWALL COLUMNS, ENDWALLS ARE DESIGNED AS SLIP CONNECTIONS (NO GRAVITY LOADS) UNLESS NOTED OTHERWISE. HORIZONTAL REACTIONS FOR WIND LOADS ARE LESS THAN OR EQUAL TO MAIN FRAME COLUMNS
3. ALL FRAMES (INCLUDED TERMINAL BAYS) ARE DESIGNED FOR THE SAME LOADS UNLESS NOTED OTHERWISE. BUILDING IS DESIGNED TO BE EXPANDED IN THE FUTURE, UNLESS THE OWNER SPECIFICALLY REQUESTS AN ALTERNATE DESIGN; IN THAT CASE, LOADS CAN BE HALVED

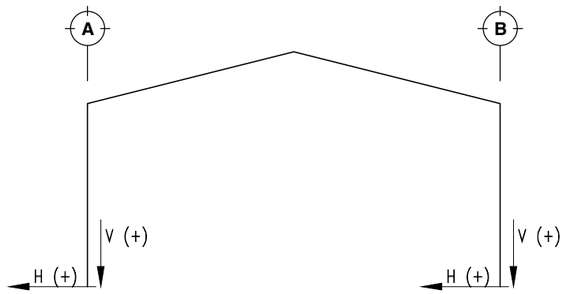

LOADING DIAGRAM

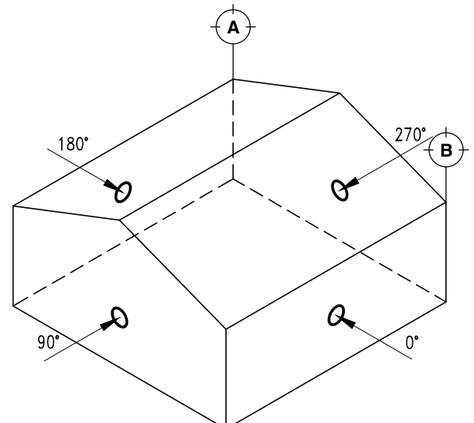

WIND DIAGRAM (ASCE MWFRS 28.4-1)

STATE OF MISSOURI
CHAD M. STREETER
NUMBER PE-2009010617
PROFESSIONAL ENGINEER
11/22/2019

Worldwide Steel Buildings
PO Box 588
Peculiar, MO 64078
Phone: 816.779.6441
Fax: 816.779.7361

VAN DEURZEN & ASSOCIATES, P.A.
11011 KING STREET,SUITE 130
OVERLAND PARK, KS 66210
Van Deurzen and Associates, P.A. © 2019

JOB NAME: STEPHEN GAARDER
WILDCAT GLADES FRIENDS GROUP
(WW JOB #59-60)
201 W RIVIERA

LOCATION: JOPLIN, MO

DESCRIPTION: BUILDING ERECTION DRAWINGS

DRAWN BY:	JWH
CHECKED BY:	CMS
SCALE:	AS NOTED
DATE:	11/22/2019
JOB NUMBER	
376-19132	
SHEET	
E0.0	0

EXACT LOCATION OF WINDOWS, OVERHEAD DOORS, AND WALK DOORS SHALL BE DETERMINED DURING BUILDING ERECTION. TRUSSES AND DIAGONAL BRACING SHALL NOT BE MOVED TO INSTALL WINDOWS, OVERHEAD DOORS, AND WALK DOORS.

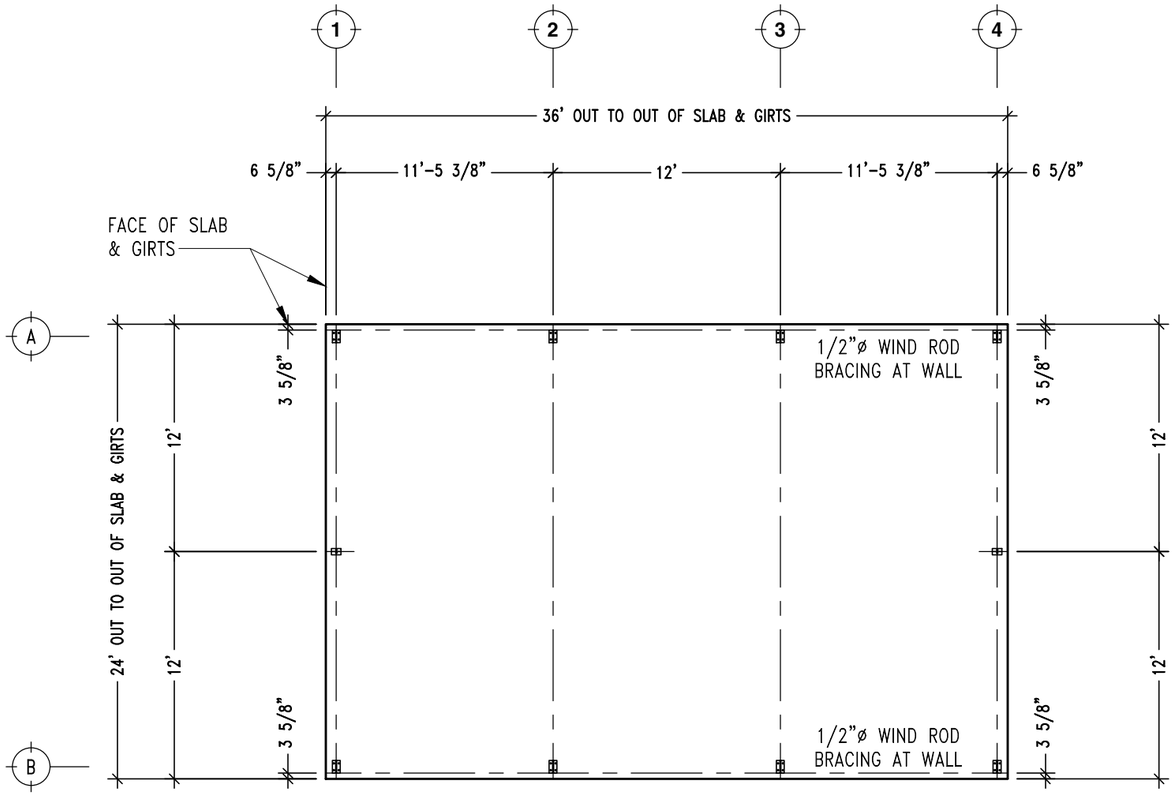

ANCHOR BOLT SETTING PLAN
SCALE: 1/8" = 1'-0"

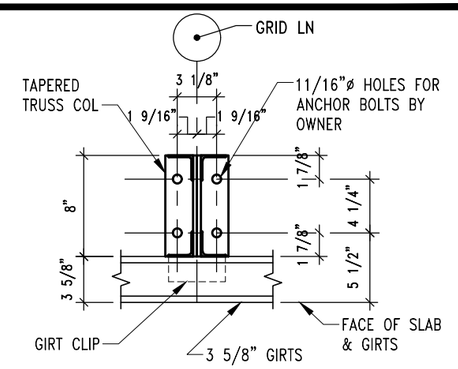

SIDEWALL ANCHOR BOLT
SCALE: 1"= 1'-0"

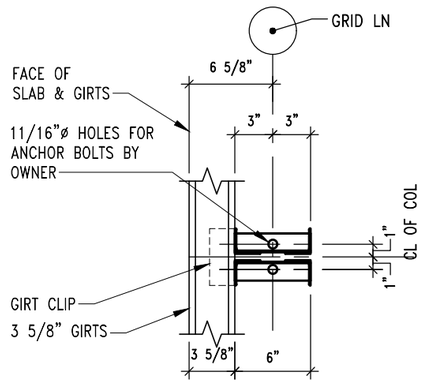

ENDWALL ANCHOR BOLT
SCALE: 1"= 1'-0"

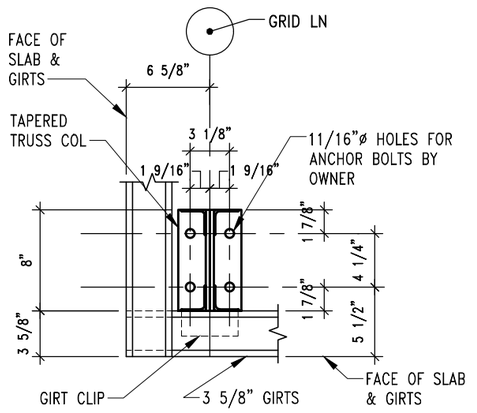

CORNER ANCHOR BOLT
SCALE: 1"= 1'-0"

STATE OF MISSOURI
CHAD M. STREETER
NUMBER PE-2005010617
PROFESSIONAL ENGINEER
11/22/2019

Worldwide Steel Buildings
PO Box 588
Peculiar, MO 64078
Phone: 816.779.7361
Fax: 816.779.6441

VAN DEURZEN & ASSOCIATES, P.A.
11011 KING STREET,SUITE 130
OVERLAND PARK, KS 66210

Von Deurzen and Associates, P.A. © 2019

JOB NAME: STEPHEN GAARDER
WILDCAT GLADES FRIENDS GROUP
(WW JOB #59-60)
201 W RIVIERA

LOCATION: JOPLIN, MO

DESCRIPTION: BUILDING ERECTION DRAWINGS

DRAWN BY:	JWH
CHECKED BY:	CMS
SCALE:	AS NOTED
DATE:	11/22/2019
JOB NUMBER	
376-19132	
SHEET	
E1.0	0

EXACT LOCATION OF WINDOWS, OVERHEAD DOORS, AND WALK DOORS SHALL BE DETERMINED DURING BUILDING ERECTION. TRUSSES AND DIAGONAL BRACING SHALL NOT BE MOVED TO INSTALL WINDOWS, OVERHEAD DOORS, AND WALK DOORS.

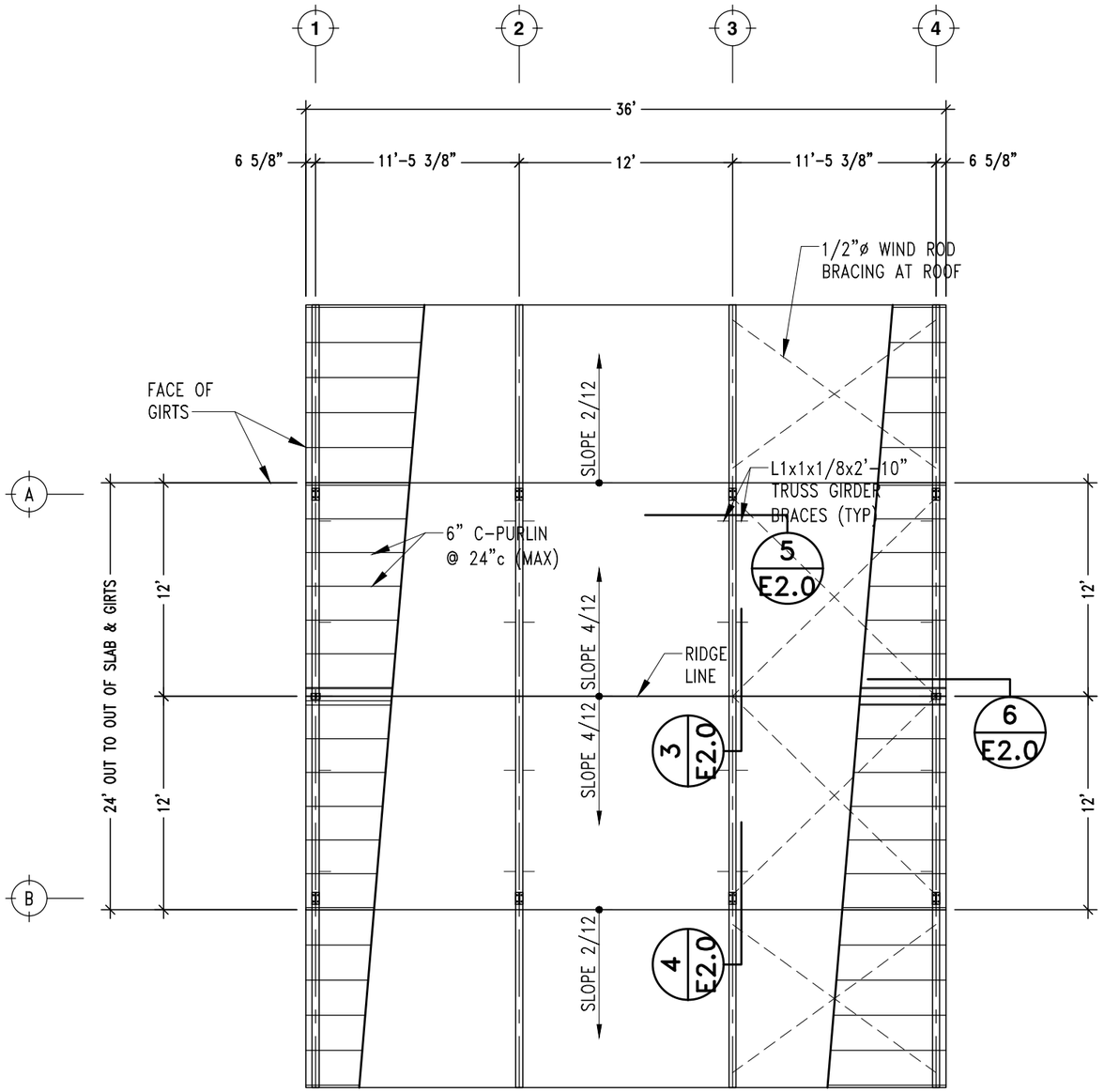

ROOF FRAMING PLAN
SCALE: 1/8" = 1'-0"

STATE OF MISSOURI
CHAD M. STREETER
NUMBER PE-2005010617
PROFESSIONAL ENGINEER
11/22/2019

Worldwide Steel Buildings
PO Box 588
Peculiar, MO 64078
Fax: 816.779.7361
Phone: 816.779.6441

VAN DEURZEN & ASSOCIATES, P.A.
11011 KING STREET,SUITE 130
OVERLAND PARK, KS 66210
Van Deurzen and Associates, P.A.

© 2019

JOB NAME: STEPHEN GAARDER
WILDCAT GLADES FRIENDS GROUP
(WW JOB #59-60)
201 W RIVIERA

LOCATION: JOPLIN, MO

DESCRIPTION: BUILDING ERECTION DRAWINGS

DRAWN BY:	JWH
CHECKED BY:	CMS
SCALE:	AS NOTED
DATE:	11/22/2019
JOB NUMBER	
376-19132	
SHEET	
E1.1	0

EXACT LOCATION OF WINDOWS, OVERHEAD DOORS, AND WALK DOORS SHALL BE DETERMINED DURING BUILDING ERECTION. TRUSSES AND DIAGONAL BRACING SHALL NOT BE MOVED TO INSTALL WINDOWS, OVERHEAD DOORS, AND WALK DOORS.

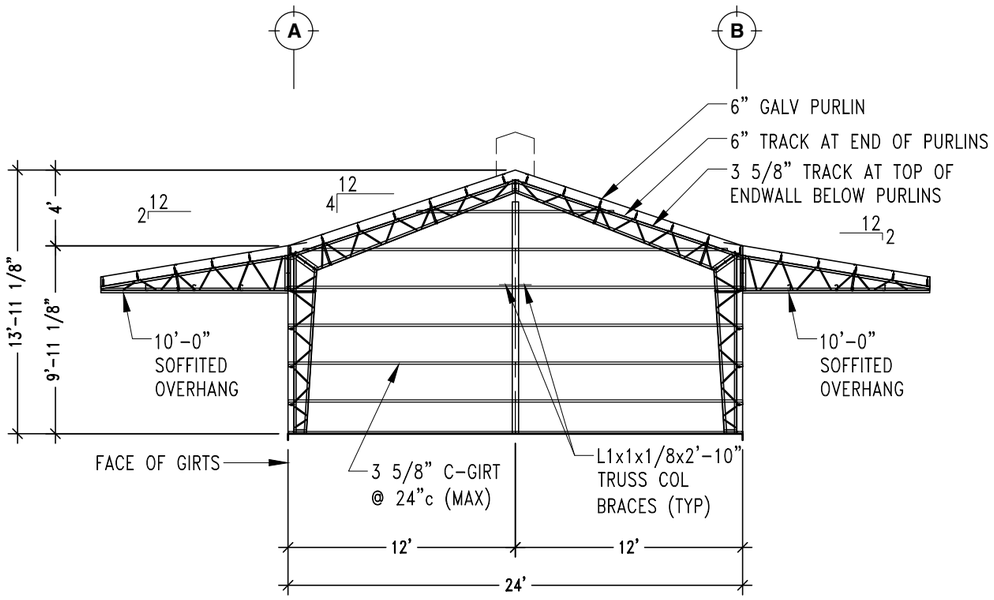

FRONT ELEVATION
SCALE: 1/8" = 1'-0"

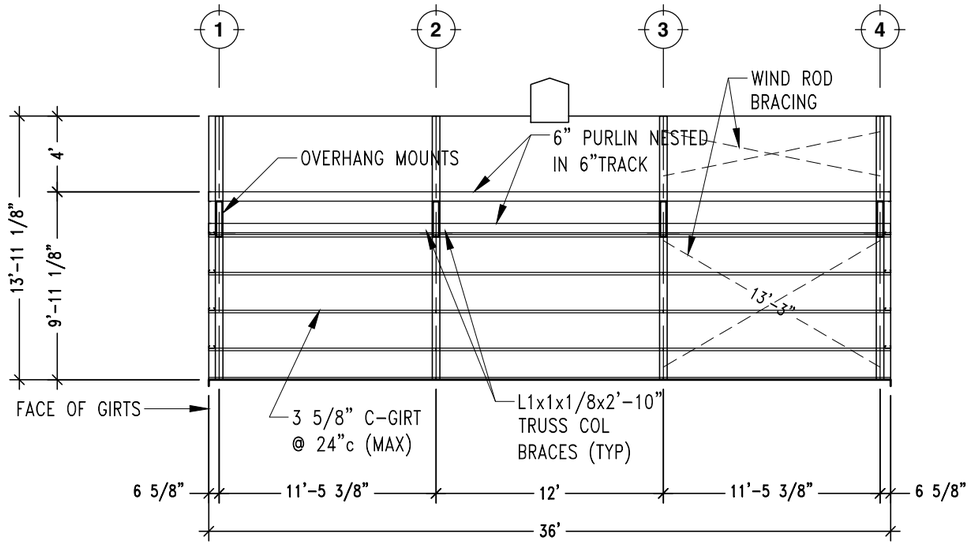

RIGHT ELEVATION
SCALE: 1/8" = 1'-0"

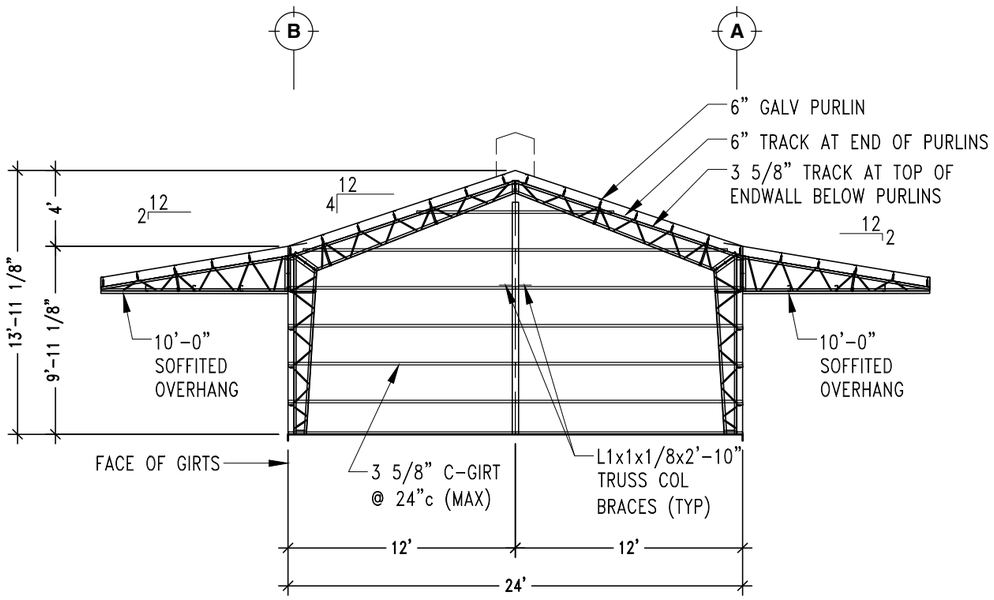

REAR ELEVATION
SCALE: 1/8" = 1'-0"

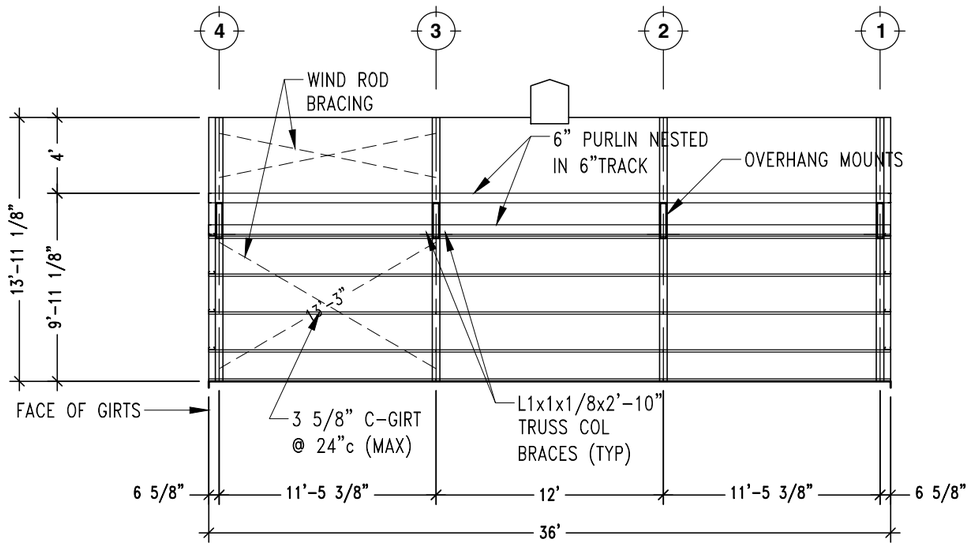

LEFT ELEVATION
SCALE: 1/8" = 1'-0"

STATE OF MISSOURI
CHAD M. STREETER
NUMBER PE-2005010617
PROFESSIONAL ENGINEER
11/22/2019

Worldwide Steel Buildings
PO Box 588
Peculiar, MO 64078
Fax: 816.779.7361
Phone: 816.779.6441

VAN DEURZEN & ASSOCIATES, P.A.
11011 KING STREET,SUITE 130
OVERLAND PARK, KS 66210
Van Deurzen and Associates, P.A. © 2019

JOB NAME: STEPHEN GAARDER
WILDCAT GLADES FRIENDS GROUP
(WW JOB #59-60)
201 W RIVIERA

LOCATION: JOPLIN, MO

DESCRIPTION: BUILDING ERECTION DRAWINGS

DRAWN BY:	JWH
CHECKED BY:	CMS
SCALE:	AS NOTED
DATE:	11/22/2019
JOB NUMBER	
376-19132	
SHEET	
E1.2	0

EXACT LOCATION OF WINDOWS, OVERHEAD DOORS, AND WALK DOORS SHALL BE DETERMINED DURING BUILDING ERECTION. TRUSSES AND DIAGONAL BRACING SHALL NOT BE MOVED TO INSTALL WINDOWS, OVERHEAD DOORS, AND WALK DOORS.

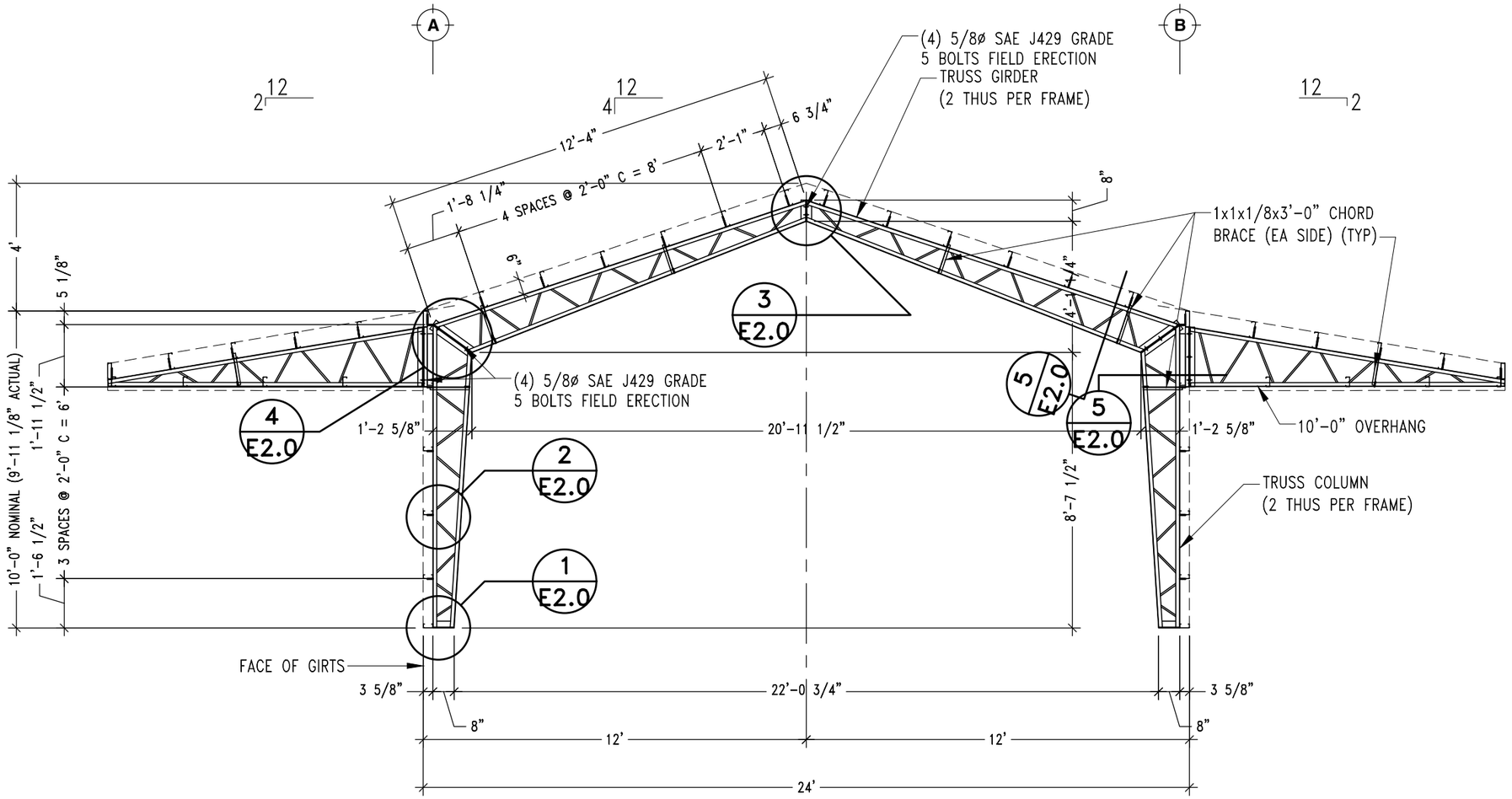

TYPICAL BUILDING SECTION

SCALE: 1/4" = 1'-0"

STATE OF MISSOURI
CHAD M. STREETER
NUMBER PE-2009010617
PROFESSIONAL ENGINEER
11/22/2019

Worldwide Steel Buildings
PO Box 588
Peculiar, MO 64078
Fax: 816.779.7361
Phone: 816.779.6441

VAN DEURZEN & ASSOCIATES, P.A.
11011 KING STREET,SUITE 130
OVERLAND PARK, KS 66210
Von Deurzen and Associates, P.A.

© 2019

JOB NAME: STEPHEN GAARDER
WILDCAT GLADES FRIENDS GROUP
(WW JOB #59-60)
201 W RIVIERA
LOCATION: JOPLIN, MO
DESCRIPTION: BUILDING ERECTION DRAWINGS

DRAWN BY:	JWH
CHECKED BY:	CMS
SCALE:	AS NOTED
DATE:	11/22/2019
JOB NUMBER	
376-19132	
SHEET	
E1.3	0

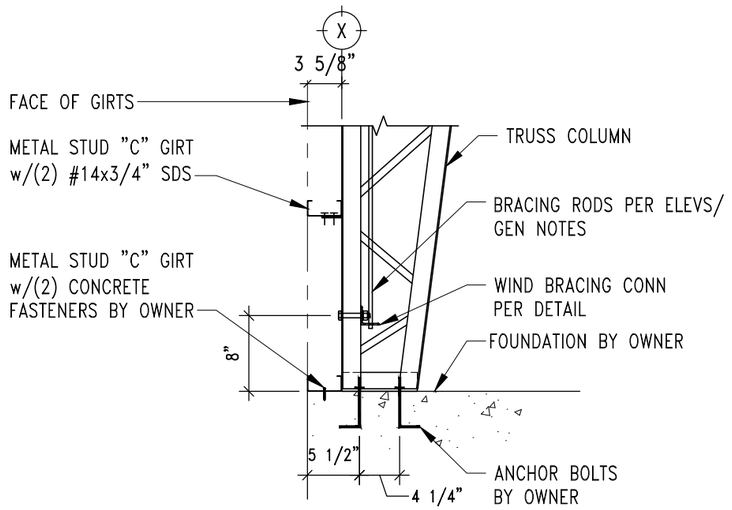

COLUMN BASE DETAIL — 1 / E2.0
SCALE: 3/4" = 1'-0"

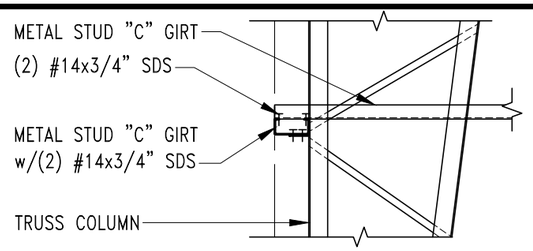

GIRT CORNER CONN. — 2a / E2.0
SCALE: 3/4" = 1'-0"

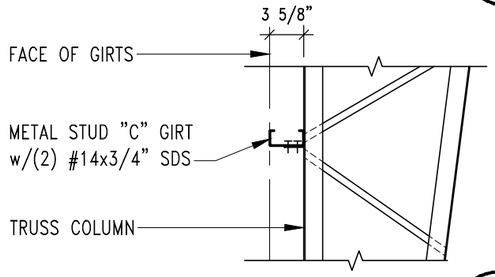

GIRT CONN. DETAIL — 2 / E2.0
SCALE: 3/4" = 1'-0"

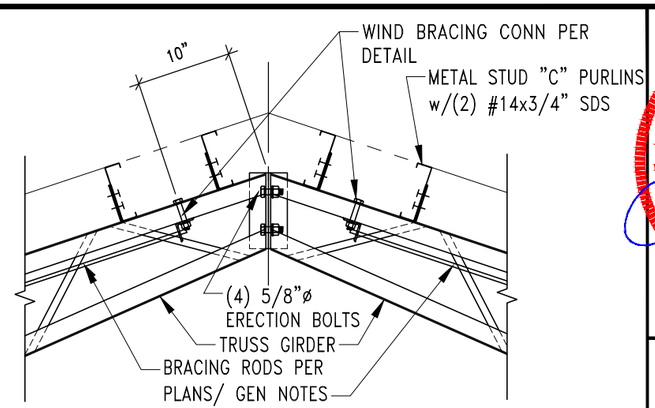

RIDGE DETAIL — 3 / E2.0
SCALE: 3/4" = 1'-0"

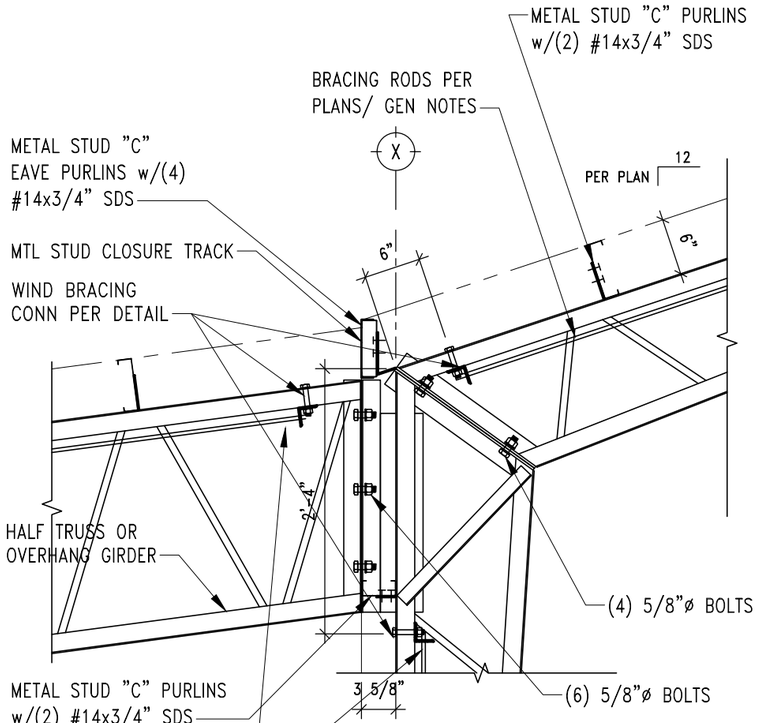

KNEE DETAIL — 4 / E2.0
SCALE: 3/4" = 1'-0"

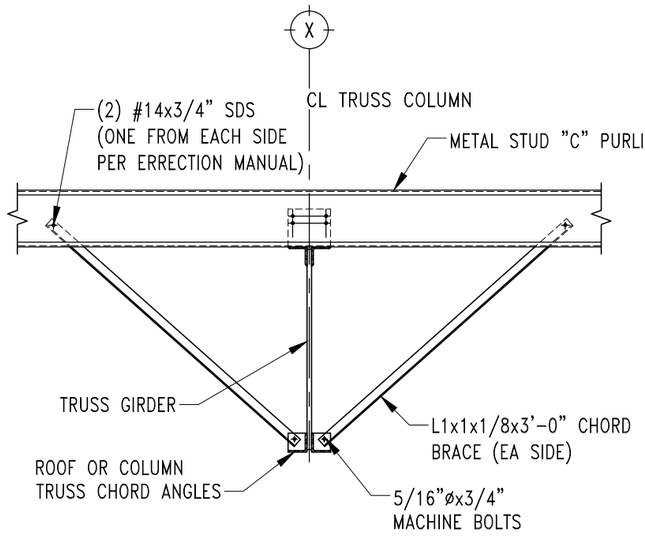

NOTE: WHERE BRACES ARE CROWDED BY A DOOR, FIELD CUT THE ANGLE (& DRILL HOLE) TO PLACE THE END AS CLOSE TO THE DOOR JAMB AS POSSIBLE

TRUSS CHORD BRACE — 5 / E2.0
SCALE: 3/4" = 1'-0"

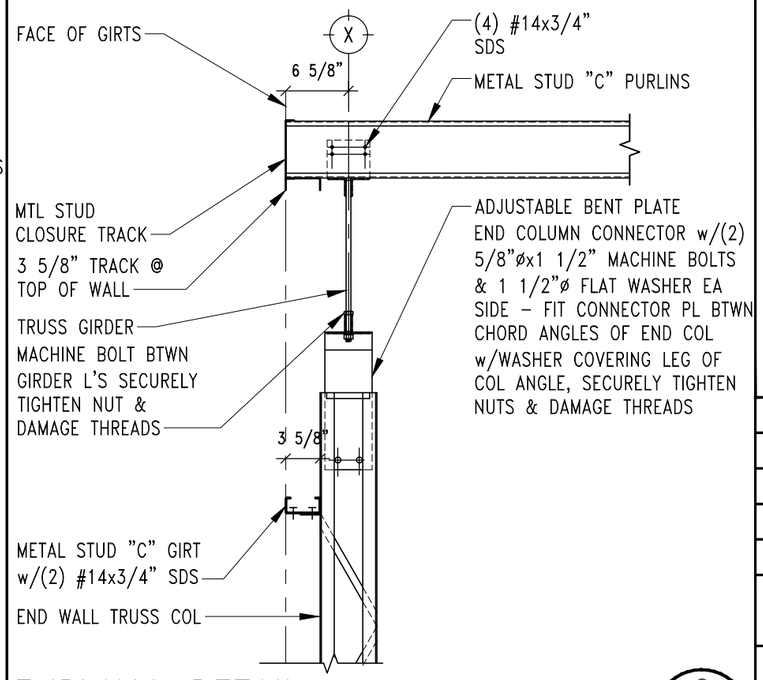

ENDWALL DETAIL — 6 / E2.0
SCALE: 3/4" = 1'-0"

STATE OF MISSOURI
CHAD M. STREETER
NUMBER PE-2005010617
PROFESSIONAL ENGINEER
11/22/2019

Worldwide Steel Buildings
PO Box 588
Peculiar, MO 64078
Fax: 816.779.7361
Phone: 816.779.6441

VAN DEURZEN & ASSOCIATES, P.A.
11011 KING STREET,SUITE 130
OVERLAND PARK, KS 66210
Van Deurzen and Associates, P.A.

© 2019

JOB NAME: STEPHEN GAARDER
WILDCAT GLADES FRIENDS GROUP
(WW JOB #59-60)
201 W RIVIERA

LOCATION: JOPLIN, MO

DESCRIPTION: BUILDING ERECTION DRAWINGS

DRAWN BY:	JWH
CHECKED BY:	CMS
SCALE:	AS NOTED
DATE:	11/22/2019
JOB NUMBER	
376-19132	
SHEET	
E2.0	⚠0

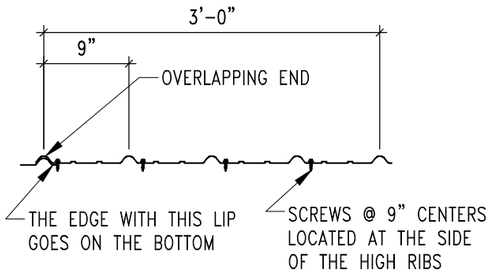

29 GAUGE (80 KSI) RIBBED PANEL at ROOF AND WALLS – ATTACH WITH #12 x 1 1/4" METAL TO METAL SELF DRILLING SCREWS WITH RUBBER WASHERS
ALTERNATE: IF USING WOOD SUBFRAMING ATTACH WITH #9 x 1 1/2" WOOD SCREWS

WALL / ROOF PANEL ATTACHMENT

SCALE: 3/4"= 1'-0"

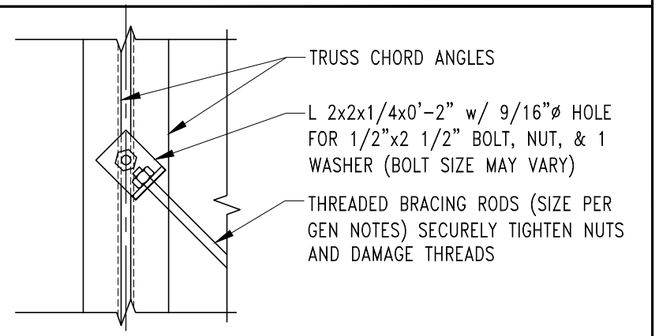

WIND BRACING CONNECTION (SINGLE)

SCALE: 2"= 1'-0"

STATE OF MISSOURI
CHAD M. STREETER
NUMBER PE-2005010617
PROFESSIONAL ENGINEER
11/22/2019

Worldwide Steel Buildings
PO Box 588
Peculiar, MO 64078
Phone: 816.779.7361
Fax: 816.779.6441

VAN DEURZEN & ASSOCIATES, P.A.
11011 KING STREET,SUITE 130
OVERLAND PARK, KS 66210
Van Deurzen and Associates, P.A. © 2019

JOB NAME: STEPHEN GAARDER
WILDCAT GLADES FRIENDS GROUP
(WW JOB #59-60)
201 W RIVIERA

LOCATION: JOPLIN, MO

DESCRIPTION: BUILDING ERECTION DRAWINGS

DRAWN BY:	JWH
CHECKED BY:	CMS
SCALE:	AS NOTED
DATE:	11/22/2019
JOB NUMBER	
376-19132	
SHEET	
E2.1	0

COUNCIL BILL NO. 2020-602 ORDINANCE NO

AN ORDINANCE authorizing the City of Joplin to enter into a first amendment to memorandum of understanding with the Wildcat Glades Friends Group, a Missouri Nonprofit Corporation ("Friends Group") for the purpose of establishing responsibilities in maintaining and operating Wildcat Park; and authorizing the Interim City Manager to execute said memorandum of understanding by and on behalf of the City of Joplin.

BE IT ORDAINED BY THE COUNCIL OF THE CITY OF JOPLIN, MISSOURI, as follows:

Section 1. That the first amendment to memorandum of understanding with the Friends Group for the purpose of establishing responsibilities in maintaining and operating Wildcat Park, a true and accurate copy of said agreement being attached hereto and incorporated as "Exhibit A," be and the same is hereby approved.

Section 2. That the City Manager of the City of Joplin, Missouri, or his designee, is hereby authorized and directed to execute said agreements, or agreements in substantially similar form, by and on behalf of the City of Joplin.

PASSED BY THE COUNCIL OF THE CITY OF JOPLIN, MISSOURI, this _____ day of _____, 2020, by a vote of _____.

_____
Gary L. Shaw, Mayor

ATTEST:

_____
Barbara J. Gollhofer, City Clerk

APPROVED AS TO FORM:

_____
Peter C. Edwards, City Attorney