Joplin Public Library

SH-1
ITEM CODE

FURNITURE SPECIFICATIONS

JOPLIN PUBLIC LIBRARY

PROJECT NO: 14289000
JOPLIN, MISSOURI
ISSUE DATE: 10/14/2016

FF&E BASIS OF DESIGN
Shelving

Manufacturer listed as basis of design only. Equal alternates can be submitted for review.

ITEM INFORMATION:

Type Mark	Collection	Count	6" Acrylic Signage	Width	Shelving Depth	Height
SH-1	Children's Early Learners	19	Yes	36"	15.75"/15.75"	48"

BOTH SIDES:

Base	15" D Browsing Bin
Row 2	12" D Browsing Bin
Row 3	Face Out Display Shelf

OTHER:

White Mats

Tunnel, See Section 6 - Tunnel

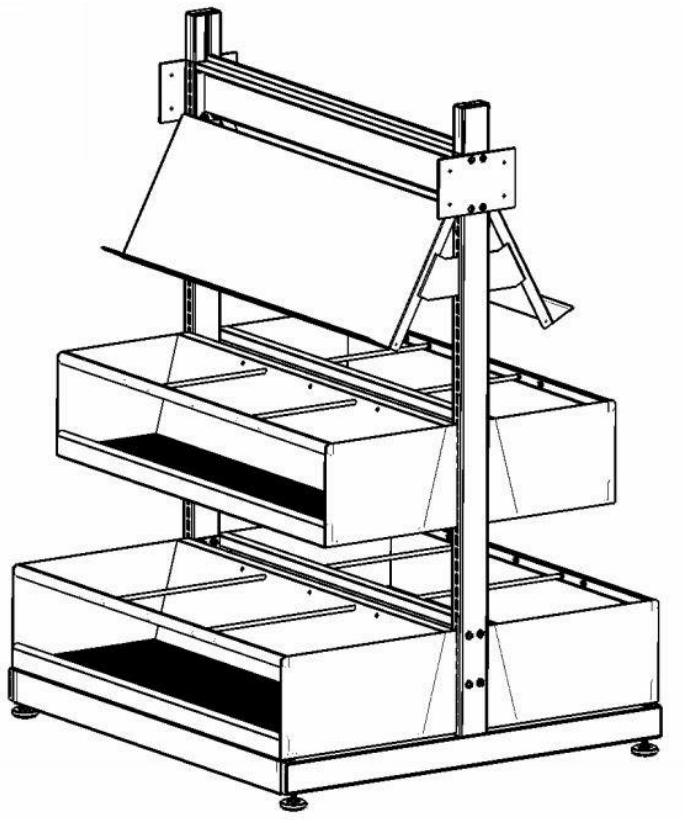

OPN ARCHITECTS

Joplin Public Library

SH-2
ITEM CODE

FURNITURE SPECIFICATIONS

JOPLIN PUBLIC LIBRARY

PROJECT NO: 14289000
JOPLIN, MISSOURI
ISSUE DATE: 10/14/2016

FF&E BASIS OF DESIGN
Shelving

Manufacturer listed as basis of design only. Equal alternates can be submitted for review.

ITEM INFORMATION:

Type Mark	Collection	Count	6" Acrylic Signage	Width	Shelving Depth	Height
SH-2	Children's Early Learners	4	Yes	36"	15.75"/OPEN	48"

SIDE ONE:

Base 15" D Browsing Bin
Row 2 12" D Browsing Bin
Row 3 Face Out Display Shelf

SIDE TWO:

Custom Peg Board Play System

OTHER:

White Mats

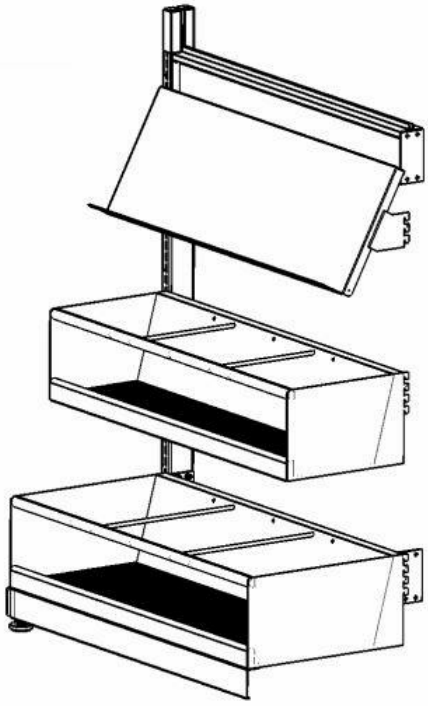

OPN ARCHITECTS

Joplin Public Library

SH-3
ITEM CODE

FURNITURE SPECIFICATIONS

JOPLIN PUBLIC LIBRARY

PROJECT NO: 14289000
JOPLIN, MISSOURI
ISSUE DATE: 10/14/2016

FF&E BASIS OF DESIGN
Shelving

Manufacturer listed as basis of design only. Equal alternates can be submitted for review.

ITEM INFORMATION:

Type Mark	Collection	Count	6" Acrylic Signage	Width	Shelving Depth	Height
SH-3	Children's Audio/DVD	2	Yes	36"	10"/10"	48"

SIDE ONE:

Base	10" D Sloped Display Shelf, 30 Degree
Row 2	10" D Sloped Display Shelf, 10 Degree
Row 3	10" D Flat Shelf with Book Stop
Row 4	10" D Flat Shelf with Book Stop

SIDE TWO:

Rows 1-4	10" D MD Browser Shelf w/ 6 Compartments

OPN ARCHITECTS

Joplin Public Library

SH-4a
ITEM CODE

FURNITURE SPECIFICATIONS

JOPLIN PUBLIC LIBRARY

PROJECT NO: 14289000
JOPLIN, MISSOURI
ISSUE DATE: 10/14/2016

FF&E BASIS OF DESIGN
Shelving

Manufacturer listed as basis of design only. Equal alternates can be submitted for review.

ITEM INFORMATION:

Type Mark	Collection	Count	6" Acrylic Signage	Width	Shelving Depth	Height
SH-4a	Children's Easy Readers	21	Yes	36"	10"/10"	48"

SIDE ONE:

Base	10" D Sloped Display Shelf, 30 Degree
Row 2	10" D Sloped Display Shelf, 10 Degree
Row 3	10" D Flat Shelf with Book Stop

SIDE TWO:

Base	10" D Sloped Display Shelf, 30 Degree
Row 2	10" D Sloped Display Shelf, 10 Degree
Row 3	MD Zig Zag Shelf with Front Lip, 4 Compartments

OPN ARCHITECTS

Joplin Public Library

SH-4b
ITEM CODE

FURNITURE SPECIFICATIONS

JOPLIN PUBLIC LIBRARY

PROJECT NO: 14289000
JOPLIN, MISSOURI
ISSUE DATE: 10/14/2016

FF&E BASIS OF DESIGN
Shelving

Manufacturer listed as basis of design only. Equal alternates can be submitted for review.

ITEM INFORMATION:

Type Mark	Collection	Count	6" Acrylic Signage	Width	Shelving Depth	Height
SH-4b	Children's Juvenile	51	Yes	36"	10"/10"	60"

SIDE ONE:

Base	10" D Sloped Display Shelf, 30 Degree
Row 2	10" D Sloped Display Shelf, 10 Degree
Rows 3,4,5	10" D Flat Shelf with Book Stop

SIDE TWO:

Base	10" D Sloped Display Shelf, 30 Degree
Row 2	10" D Sloped Display Shelf, 10 Degree
Rows 3,4	10" D Flat Shelf with Book Stop
Row 5	MD Zig Zag Shelf with Front Lip, 4 Compartments

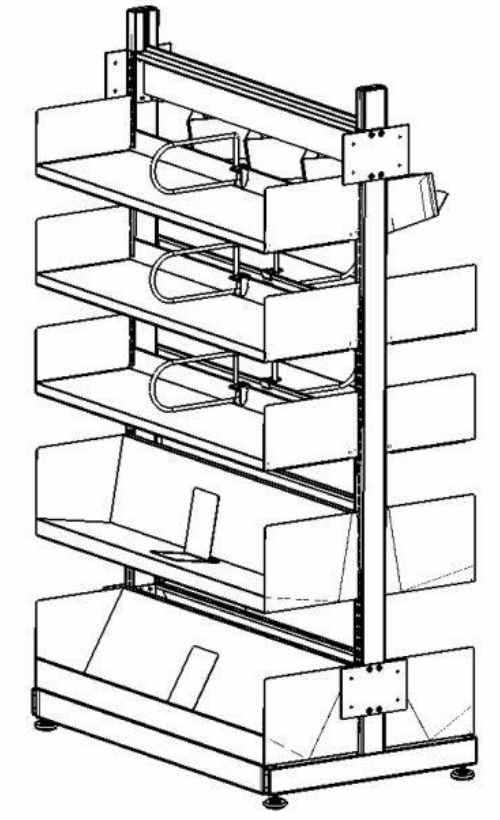

OPN ARCHITECTS

Joplin Public Library

SH-5a
ITEM CODE

FURNITURE SPECIFICATIONS

JOPLIN PUBLIC LIBRARY

PROJECT NO: 14289000
JOPLIN, MISSOURI
ISSUE DATE: 10/14/2016

FF&E BASIS OF DESIGN
Shelving

Manufacturer listed as basis of design only. Equal alternates can be submitted for review.

ITEM INFORMATION:

Type Mark	Collection	Count	6" Acrylic Signage	Width	Shelving Depth	Height
SH-5a	18 Degree Curved	7	No	36"	12"/12"	48"

BOTH SIDES:

Rows 1,2,3 12" D Flat Shelf with Book Stop

OTHER:

Canopy Tops - See Section 8
Puppet Theatre - See Section 6, Puppet Theatre
Storage - See Section 6, Storage

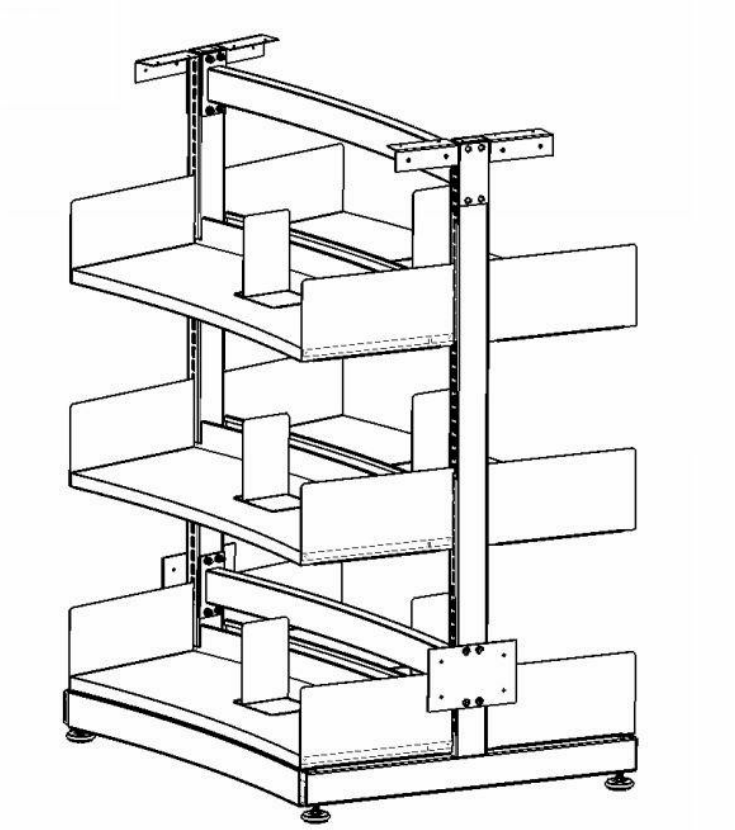

OPN ARCHITECTS

Joplin Public Library

SH-5b
ITEM CODE

FURNITURE SPECIFICATIONS

JOPLIN PUBLIC LIBRARY

PROJECT NO: 14289000
JOPLIN, MISSOURI
ISSUE DATE: 10/14/2016

FF&E BASIS OF DESIGN
Shelving

Manufacturer listed as basis of design only. Equal alternates can be submitted for review.

ITEM INFORMATION:

Type Mark	Collection	Count	6" Acrylic Signage	Width	Shelving Depth	Height
SH-5b	26 Degree Curved	15	No	36"	10"/10"	48"

BOTH SIDES:

Rows 1,2,3 10" D Flat Shelf with Book Stop

OTHER:

Canopy Tops - See Section 8

OPN ARCHITECTS

Joplin Public Library

SH-6
ITEM CODE

FURNITURE SPECIFICATIONS

JOPLIN PUBLIC LIBRARY

PROJECT NO: 14289000
JOPLIN, MISSOURI
ISSUE DATE: 10/14/2016

FF&E BASIS OF DESIGN
Shelving

Manufacturer listed as basis of design only. Equal alternates can be submitted for review.

ITEM INFORMATION:

Type Mark	Collection	Count	6" Acrylic Signage	Width	Shelving Depth	Height
SH-6	Children's DVD	7	Yes	36"	10"D/10"D	48"

BOTH SIDES:

Rows 1-4 10" D MD Browser Shelf with 6 Compartments

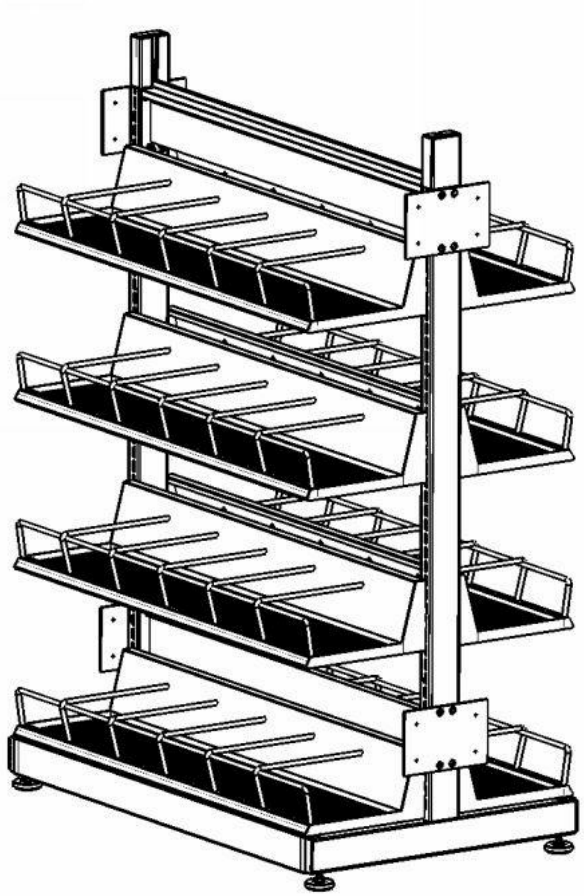

OPN ARCHITECTS

Joplin Public Library

SH-7a
ITEM CODE

FURNITURE SPECIFICATIONS

JOPLIN PUBLIC LIBRARY

PROJECT NO: 14289000
JOPLIN, MISSOURI
ISSUE DATE: 10/14/2016

FF&E BASIS OF DESIGN
Shelving

Manufacturer listed as basis of design only. Equal alternates can be submitted for review.

ITEM INFORMATION:

Type Mark	Collection	Count	6" Acrylic Signage	Width	Shelving Depth	Height
SH-7a	Adult CDs - Mobile	6	No	36"	10"D/10"D	48"

BOTH SIDES:

Rows 1-4 10" D MD Browser Shelf with 6 Compartments

Casters Yes

OTHER:

Canopy Tops, See Section 8

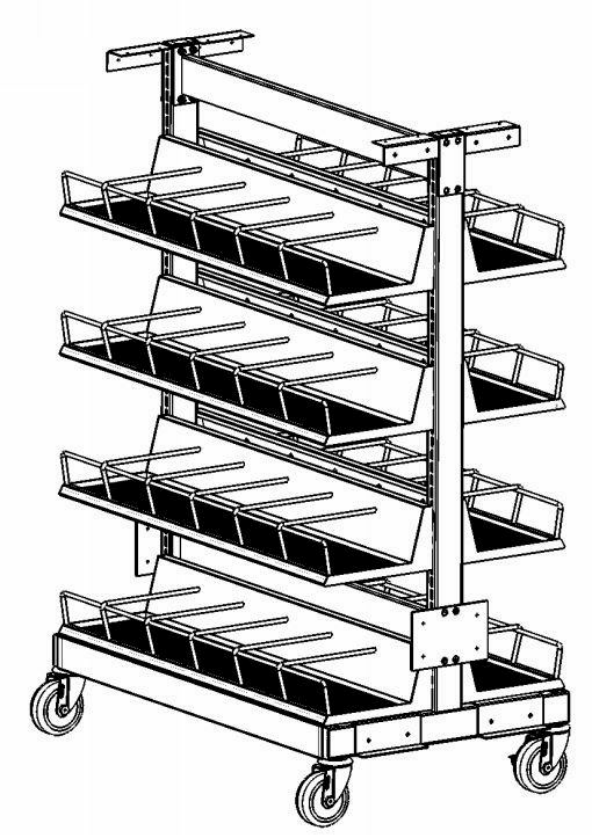

OPN ARCHITECTS

Joplin Public Library

SH-7b
ITEM CODE

FURNITURE SPECIFICATIONS

JOPLIN PUBLIC LIBRARY

PROJECT NO: 14289000
JOPLIN, MISSOURI
ISSUE DATE: 10/14/2016

FF&E BASIS OF DESIGN
Shelving

Manufacturer listed as basis of design only. Equal alternates can be submitted for review.

ITEM INFORMATION:

Type Mark	Collection	Count	6" Acrylic Signage	Width	Shelving Depth	Height
SH-7b	Book Sales - Mobile	6	No	36"	10"D/10"D	48"

BOTH SIDES:

Base	10" D Sloped Display Shelf, 30 Degree
Row 2	10" D Sloped Display Shelf, 10 Degree
Row 3	10" D Flat Shelf with Book Stop

Casters Yes

OTHER:

Canopy Tops, See Section 8

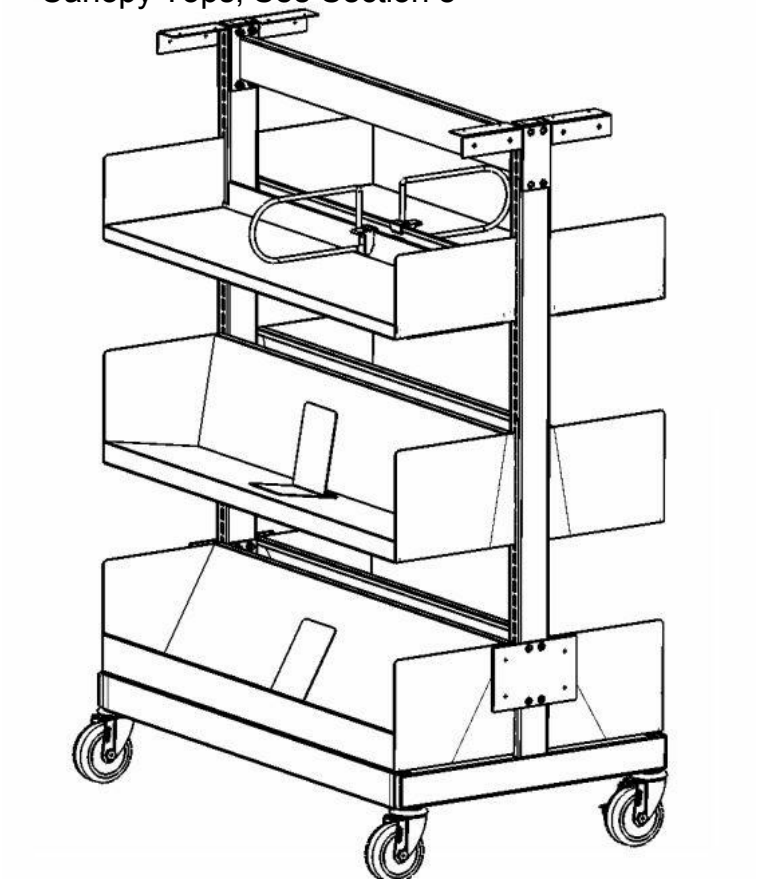

OPN ARCHITECTS

Joplin Public Library

SH-8
ITEM CODE

FURNITURE SPECIFICATIONS

JOPLIN PUBLIC LIBRARY

PROJECT NO: 14289000
JOPLIN, MISSOURI
ISSUE DATE: 10/14/2016

FF&E BASIS OF DESIGN
Shelving

Manufacturer listed as basis of design only. Equal alternates can be submitted for review.

ITEM INFORMATION:

Type Mark	Collection	Count	6" Acrylic Signage	Width	Shelving Depth	Height
SH-8	New Books - Mobile	12	No	36"	10"D/10"D	48"

SIDE ONE:

Base 10" D Sloped Display Shelf, 30 Degree
Row 2 10" D Sloped Display Shelf, 10 Degree
Row 3 10" D Flat Shelf with Book Stop

Casters Yes

SIDE TWO:

Base 10" D Sloped Display Shelf, 30 Degree
Row 2 10" D Sloped Display Shelf, 10 Degree
Row 3 MD Zig Zag Shelf with Lip, 4 Compartments

Casters Yes

OTHER:

Canopy Tops, See Section 8

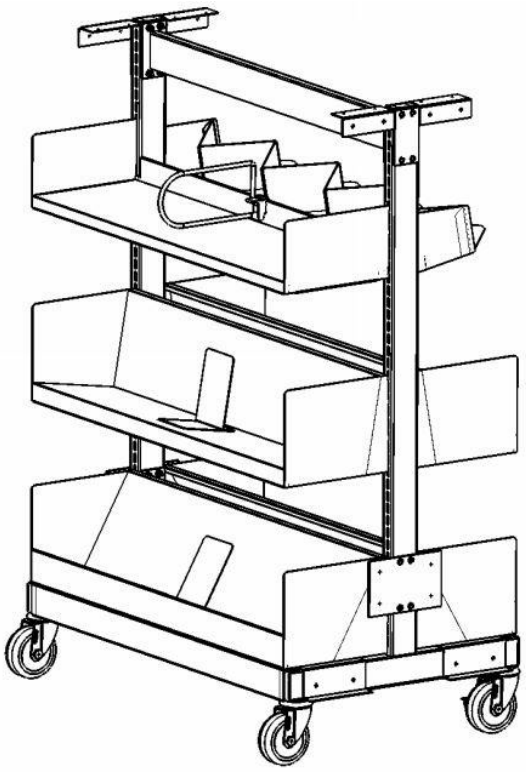

OPN ARCHITECTS

Joplin Public Library

SH-9
ITEM CODE

FURNITURE SPECIFICATIONS

JOPLIN PUBLIC LIBRARY

PROJECT NO: 14289000
JOPLIN, MISSOURI
ISSUE DATE: 10/14/2016

FF&E BASIS OF DESIGN
Shelving

Manufacturer listed as basis of design only. Equal alternates can be submitted for review.

ITEM INFORMATION:

Type Mark	Collection	Count	6" Acrylic Signage	Width	Shelving Depth	Height
SH-9	Local History, Large Print, Adult Fiction	106	Yes	36"	10"D/10"D	66"

BOTH SIDES:

Base	10" D Sloped Display Shelf, 30 Degree
Row 2	10" D Sloped Display Shelf, 10 Degree
Rows 3,4,5	10" D Flat Shelf with Book Stop

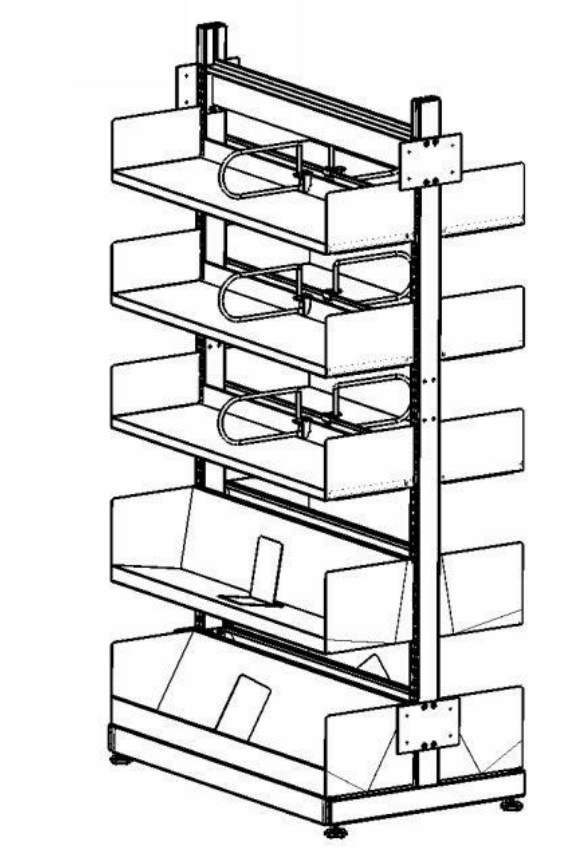

OPN ARCHITECTS

Joplin Public Library

SH-10
ITEM CODE

FURNITURE SPECIFICATIONS

JOPLIN PUBLIC LIBRARY

PROJECT NO: 14289000
JOPLIN, MISSOURI
ISSUE DATE: 10/14/2016

FF&E BASIS OF DESIGN
Shelving

Manufacturer listed as basis of design only. Equal alternates can be submitted for review.

ITEM INFORMATION:

Type Mark	Collection	Count	6" Acrylic Signage	Width	Shelving Depth	Height
SH-10	Local History	4	Yes	36"	10"D/10"D	66"

BOTH SIDES:

Base	10" D Sloped Display Shelf, 30 Degree
Row 2	10" D Sloped Display Shelf, 10 Degree
Rows 3,4	10" D Flat Shelf with Book Stop
Row 5	Face Out Display Shelf

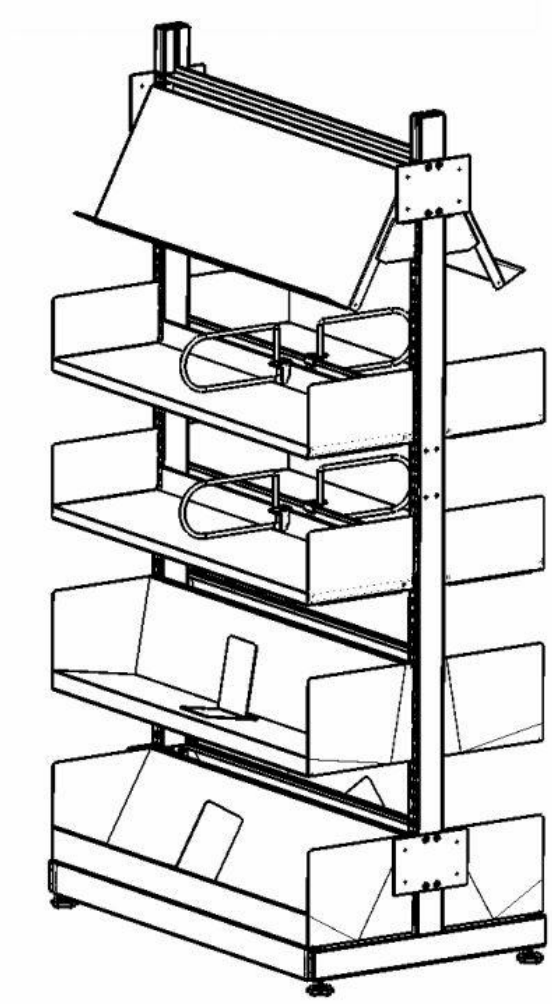

OPN ARCHITECTS

Joplin Public Library

SH-11
ITEM CODE

FURNITURE SPECIFICATIONS

JOPLIN PUBLIC LIBRARY

PROJECT NO: 14289000
JOPLIN, MISSOURI
ISSUE DATE: 10/14/2016

FF&E BASIS OF DESIGN
Shelving

Manufacturer listed as basis of design only. Equal alternates can be submitted for review.

ITEM INFORMATION:

Type Mark	Collection	Count	6" Acrylic Signage	Width	Shelving Depth	Height
SH-11	Post	4	Yes	36"	10"D/10"D	66"

SIDE ONE:

Base	10" D Sloped Display Shelf, 30 Degree
Row 2	10" D Sloped Display Shelf, 10 Degree
Row 3	10" D Flat Shelf with Book Stop
Rows 4,5	Face Out Display Shelf

SIDE TWO:

Rows 1-4	12" D Periodical Old Style Hinged Shelf
Row 5	MD Zig Zag Shelf with Lip, 3 Compartments

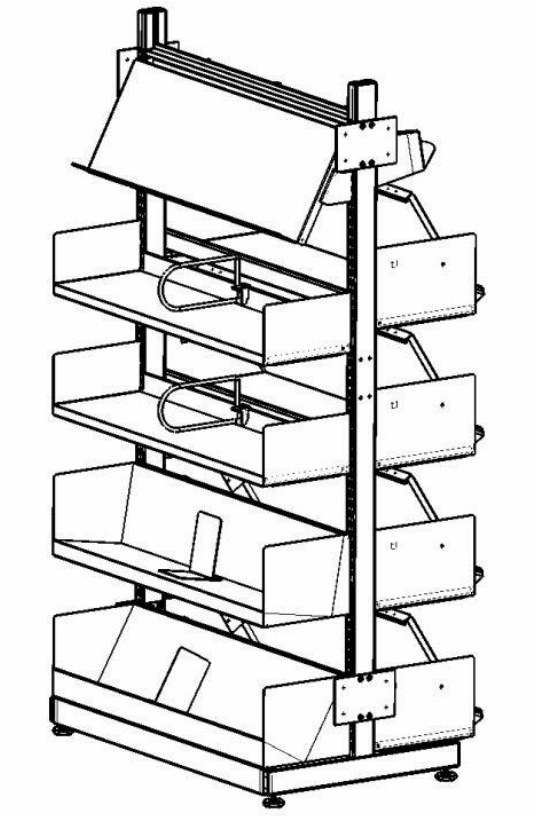

OPN ARCHITECTS

Joplin Public Library

SH-12
ITEM CODE

FURNITURE SPECIFICATIONS

JOPLIN PUBLIC LIBRARY

PROJECT NO: 14289000
JOPLIN, MISSOURI
ISSUE DATE: 10/14/2016

FF&E BASIS OF DESIGN
Shelving

Manufacturer listed as basis of design only. Equal alternates can be submitted for review.

ITEM INFORMATION:

Type Mark	Collection	Count	6" Acrylic Signage	Width	Shelving Depth	Height
SH-12	Architectural Recesses	8	No	36"	SF 10"D	78"

BOTH SIDES:

Base	10" D Sloped Display Shelf, 30 Degree
Row 2	10" D Sloped Display Shelf, 10 Degree
Rows 3-6	10" D Flat Shelf with Book Stop

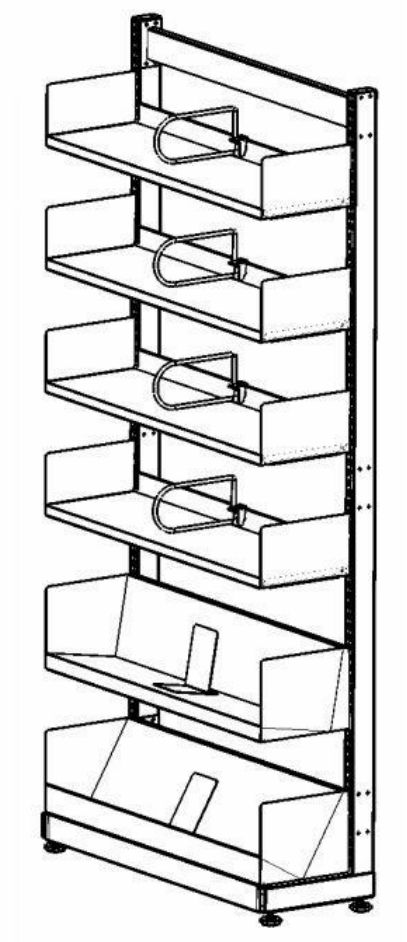

OPN ARCHITECTS

Joplin Public Library

SH-13
ITEM CODE

FURNITURE SPECIFICATIONS

JOPLIN PUBLIC LIBRARY

PROJECT NO: 14289000
JOPLIN, MISSOURI
ISSUE DATE: 10/14/2016

FF&E BASIS OF DESIGN
Shelving

Manufacturer listed as basis of design only. Equal alternates can be submitted for review.

ITEM INFORMATION:

Type Mark	Collection	Count	6" Acrylic Signage	Width	Shelving Depth	Height
SH-13	Periodical Shelving	3	No	36"	SF 12"D	78"

SIDE ONE:

Rows 1-6 12"D Periodical Old Style Hinged Shelf

OPN ARCHITECTS

Joplin Public Library

SH-14
ITEM CODE

FURNITURE SPECIFICATIONS

JOPLIN PUBLIC LIBRARY

PROJECT NO: 14289000
JOPLIN, MISSOURI
ISSUE DATE: 10/14/2016

FF&E BASIS OF DESIGN
Shelving

Manufacturer listed as basis of design only. Equal alternates can be submitted for review.

ITEM INFORMATION:

Type Mark	Collection	Count	6" Acrylic Signage	Width	Shelving Depth	Height
SH-14	Periodical Shelving	9	Yes	36"	12"D/12"D	66"

BOTH SIDES:

Rows 1-5 12"D Periodical Old Style Hinged Shelf

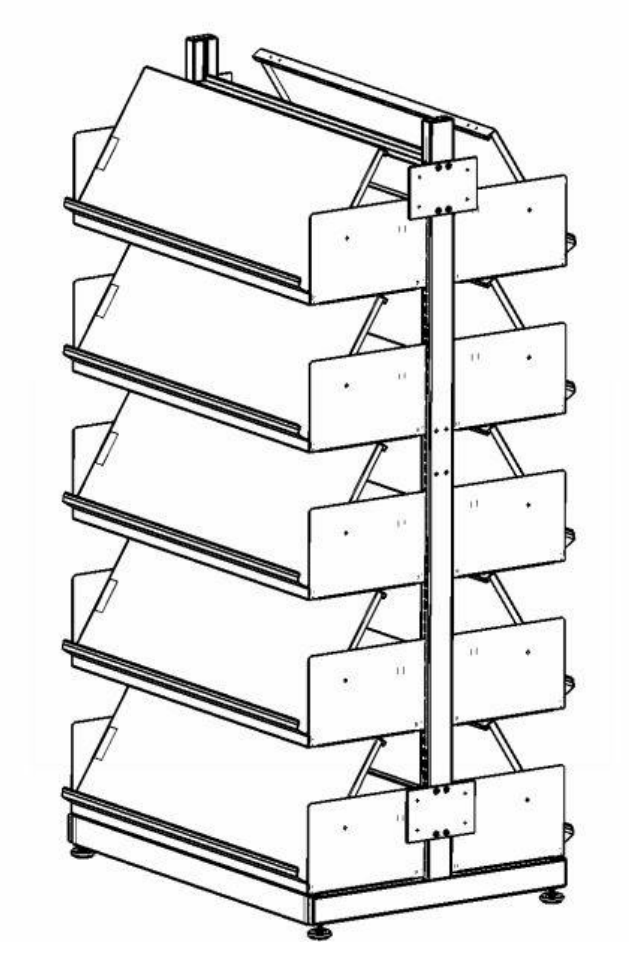

OPN ARCHITECTS

Joplin Public Library

SH-15a
ITEM CODE

FURNITURE SPECIFICATIONS

JOPLIN PUBLIC LIBRARY

PROJECT NO: 14289000
JOPLIN, MISSOURI
ISSUE DATE: 10/14/2016

FF&E BASIS OF DESIGN
Shelving

Manufacturer listed as basis of design only. Equal alternates can be submitted for review.

ITEM INFORMATION:

Type Mark	Collection	Count	6" Acrylic Signage	Width	Shelving Depth	Height
SH-15a	Adult Large Print	26	Yes	36"	10"D/10"D	66"

SIDE ONE:

Base	10" D Sloped Display Shelf, 30 degree
Row 2	10" D Sloped Display Shelf, 10 degree
Rows 3,4,5	10" D Flat Shelf with Book Stop

SIDE TWO:

Base	10" D Sloped Display Shelf, 30 degree
Row 2	10" D Sloped Display Shelf, 10 degree
Rows 3,4	10" D Flat Shelf with Book Stop
Row 5	MD Zig Zag Shelf with Lip, 3 Compartments

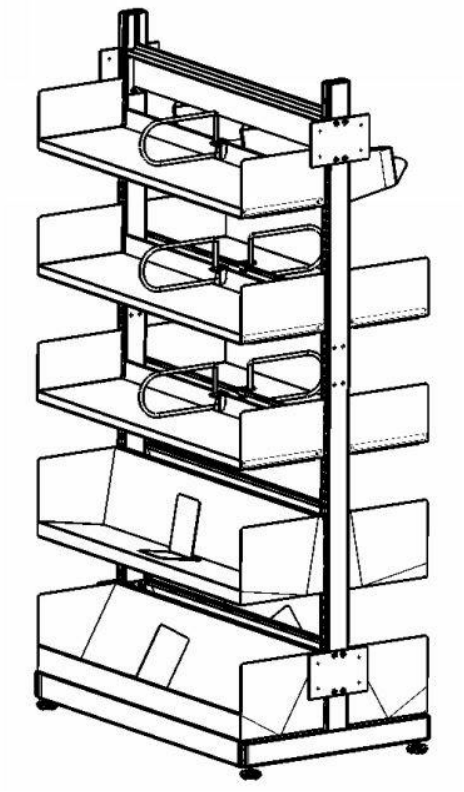

OPN ARCHITECTS

Joplin Public Library

SH-15b
ITEM CODE

FURNITURE SPECIFICATIONS

JOPLIN PUBLIC LIBRARY

PROJECT NO: 14289000
JOPLIN, MISSOURI
ISSUE DATE: 10/14/2016

FF&E BASIS OF DESIGN
Shelving

Manufacturer listed as basis of design only. Equal alternates can be submitted for review.

ITEM INFORMATION:

Type Mark	Collection	Count	6" Acrylic Signage	Width	Shelving Depth	Height
SH-15b	Adult Audio, Adult Fiction	101	Yes	36"	10"D/10"D	66"

SIDE ONE:

Base	10" D Sloped Display Shelf, 30 degree
Row 2	10" D Sloped Display Shelf, 10 degree
Rows 3,4,5	10" D Flat Shelf with Book Stop

SIDE TWO:

Base	10" D Sloped Display Shelf, 30 degree
Row 2	10" D Sloped Display Shelf, 10 degree
Rows 3,4	10" D Flat Shelf with Book Stop
Row 5	MD Zig Zag Shelf with Lip, 4 Compartments

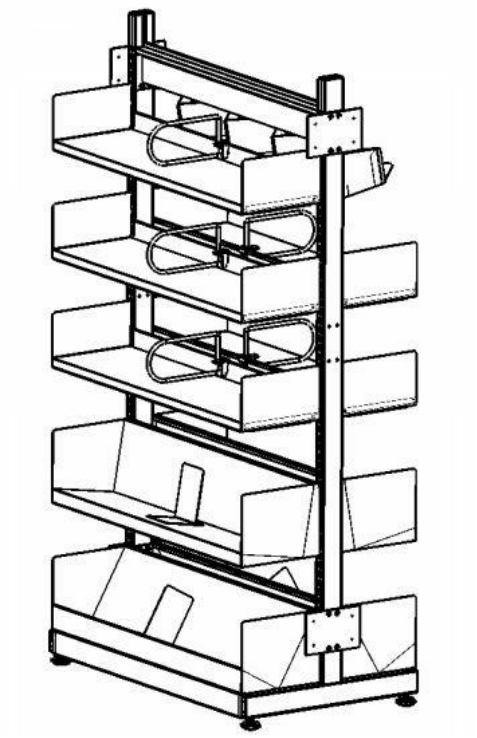

OPN ARCHITECTS

Joplin Public Library

SH-16
ITEM CODE

FURNITURE SPECIFICATIONS

JOPLIN PUBLIC LIBRARY

PROJECT NO: 14289000
JOPLIN, MISSOURI
ISSUE DATE: 10/14/2016

FF&E BASIS OF DESIGN
Shelving

Manufacturer listed as basis of design only. Equal alternates can be submitted for review.

ITEM INFORMATION:

Type Mark	Collection	Count	6" Acrylic Signage	Width	Shelving Depth	Height
SH-16	Newspaper Display	3	No	36"	SF 10"D	66"

SIDE ONE:

Rows 1-4 10" D Flat Shelf with Book Stop

OTHER:

Shelves to have Magboxes. See AC-2 specification sheet.

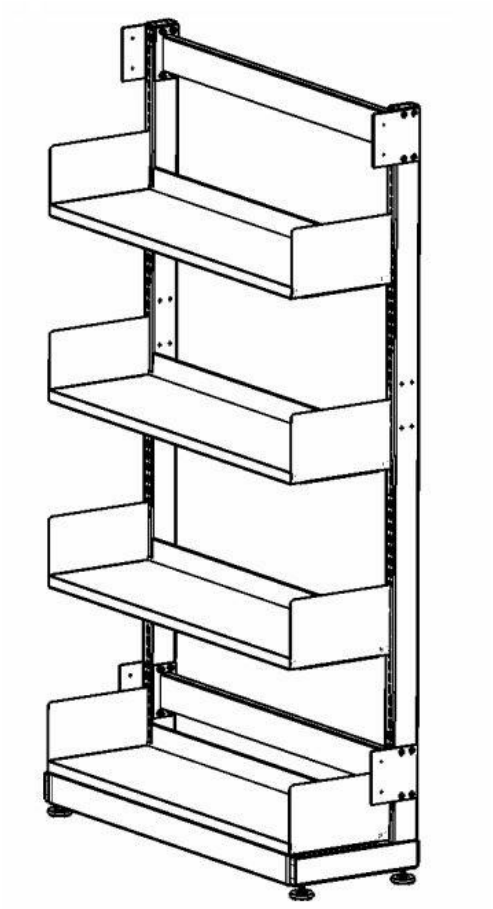

OPN ARCHITECTS

Joplin Public Library

SH-17
ITEM CODE

FURNITURE SPECIFICATIONS

JOPLIN PUBLIC LIBRARY

PROJECT NO: 14289000
JOPLIN, MISSOURI
ISSUE DATE: 10/14/2016

FF&E BASIS OF DESIGN
Shelving

Manufacturer listed as basis of design only. Equal alternates can be submitted for review.

ITEM INFORMATION:

Type Mark	Collection	Count	6" Acrylic Signage	Width	Shelving Depth	Height
SH-17	Teen	9	Yes	36"	10"D/10"D	66"

SIDE ONE:

Base	10" D Sloped Display Shelf, 30 degree
Row 2	10" D Sloped Display Shelf, 10 degree
Rows 3,4,5	10" D Flat Shelf with Book Stop

SIDE TWO:

Base	10" D Sloped Display Shelf, 30 degree
Row 2	10" D Sloped Display Shelf, 10 degree
Rows 3,4	10" D Flat Shelf with Book Stop
Row 5	MD Zig Zag Shelf with Lip, 4 Compartments

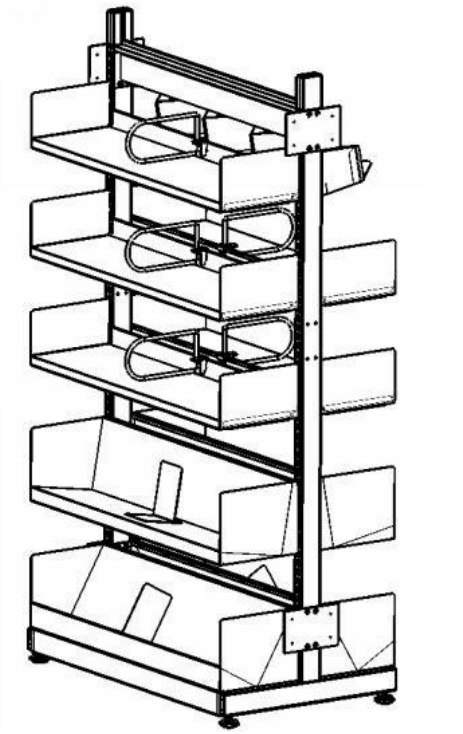

OPN ARCHITECTS

Joplin Public Library

SH-18
ITEM CODE

FURNITURE SPECIFICATIONS

JOPLIN PUBLIC LIBRARY

PROJECT NO: 14289000
JOPLIN, MISSOURI
ISSUE DATE: 10/14/2016

FF&E BASIS OF DESIGN
Shelving

Manufacturer listed as basis of design only. Equal alternates can be submitted for review.

ITEM INFORMATION:

Type Mark	Collection	Count	6" Acrylic Signage	Width	Shelving Depth	Height
SH-18	Teen	8	Yes	36"	10"D/10"D	66"

BOTH SIDES:

Base	10" D Sloped Display Shelf, 30 degree
Row 2	10" D Sloped Display Shelf, 10 degree
Rows 3,4,5	10" D Flat Shelf with Book Stop

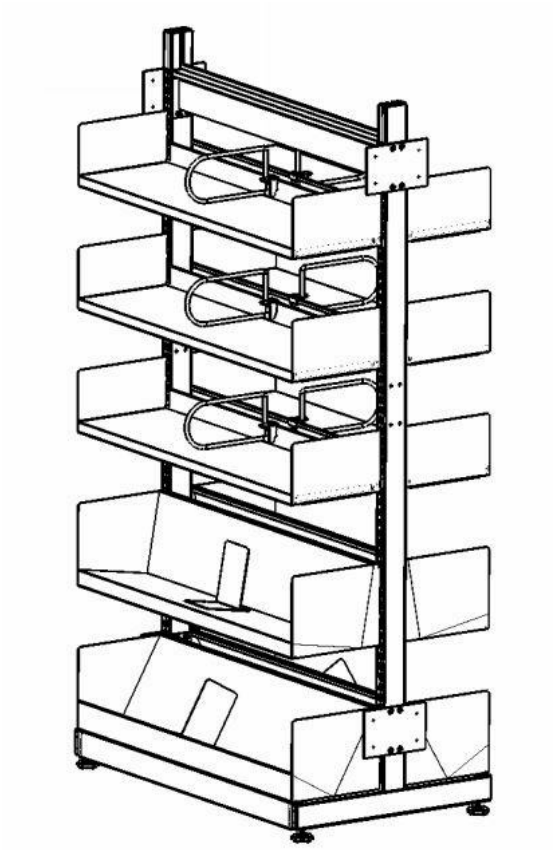

OPN ARCHITECTS

Joplin Public Library

SH-19
ITEM CODE

FURNITURE SPECIFICATIONS

JOPLIN PUBLIC LIBRARY

PROJECT NO: 14289000
JOPLIN, MISSOURI
ISSUE DATE: 10/14/2016

FF&E BASIS OF DESIGN
Shelving

Manufacturer listed as basis of design only. Equal alternates can be submitted for review.

ITEM INFORMATION:

Type Mark	Collection	Count	6" Acrylic Signage	Width	Shelving Depth	Height
SH-19	Print Reference	8	Yes	36"	10"D/10"D	48"

SIDE ONE:

Base	10" D Sloped Display Shelf, 30 degree
Row 2	10" D Sloped Display Shelf, 10 degree
Row 3	10" D Flat Shelf with Book Stop

SIDE TWO:

Base	10" D Sloped Display Shelf, 30 degree
Row 2	10" D Sloped Display Shelf, 10 degree
Row 3	MD Zig Zag Shelf with Lip, 3 Compartments

OPN ARCHITECTS

Joplin Public Library

SH-20
ITEM CODE

FURNITURE SPECIFICATIONS

JOPLIN PUBLIC LIBRARY

PROJECT NO: 14289000
JOPLIN, MISSOURI
ISSUE DATE: 10/14/2016

FF&E BASIS OF DESIGN
Shelving

Manufacturer listed as basis of design only. Equal alternates can be submitted for review.

ITEM INFORMATION:

Type Mark	Collection	Count	6" Acrylic Signage	Width	Shelving Depth	Height
SH-20	Print Reference	4	Yes	36"	10"D/10"D	48"

BOTH SIDES:

Base	10" D Sloped Display Shelf, 30 degree
Row 2	10" D Sloped Display Shelf, 10 degree
Row 3	10" D Flat Shelf with Book Stop

OPN ARCHITECTS

Joplin Public Library

SH-21
ITEM CODE

FURNITURE SPECIFICATIONS

JOPLIN PUBLIC LIBRARY

PROJECT NO: 14289000
JOPLIN, MISSOURI
ISSUE DATE: 10/14/2016

FF&E BASIS OF DESIGN
Shelving

Manufacturer listed as basis of design only. Equal alternates can be submitted for review.

ITEM INFORMATION:

Type Mark	Collection	Count	6" Acrylic Signage	Width	Shelving Depth	Height
SH-21	Adult DVD	21	Yes	36"	10"D/10"D	66"

BOTH SIDES:

Rows 1-5 10"D MD Browser Shelf with 6 Compartments

OPN ARCHITECTS

Joplin Public Library

SH-22
ITEM CODE

FURNITURE SPECIFICATIONS

JOPLIN PUBLIC LIBRARY

PROJECT NO: 14289000
JOPLIN, MISSOURI
ISSUE DATE: 10/14/2016

FF&E BASIS OF DESIGN
Shelving

Manufacturer listed as basis of design only. Equal alternates can be submitted for review.

ITEM INFORMATION:

Type Mark	Collection	Count	6" Acrylic Signage	Width	Shelving Depth	Height
SH-22	Adult Fiction	4	Yes	30"	10"D/10"D	66"

BOTH SIDES:

Base	10" D Sloped Display Shelf, 30 degree
Row 2	10" D Sloped Display Shelf, 10 degree
Rows 3,4,5	10" D Flat Shelf with Book Stop

OPN ARCHITECTS

Joplin Public Library

SH-23
ITEM CODE

FURNITURE SPECIFICATIONS

JOPLIN PUBLIC LIBRARY

PROJECT NO: 14289000
JOPLIN, MISSOURI
ISSUE DATE: 10/14/2016

FF&E BASIS OF DESIGN
Shelving

Manufacturer listed as basis of design only. Equal alternates can be submitted for review.

ITEM INFORMATION:

Type Mark	Collection	Count	6" Acrylic Signage	Width	Shelving Depth	Height
SH-23	Adult Fiction	4	No	36"	SF 10"D	66"

SIDE ONE:

Base	10" D Sloped Display Shelf, 30 degree
Row 2	10" D Sloped Display Shelf, 10 degree
Rows 3-5	10" D Flat Shelf with Book Stop

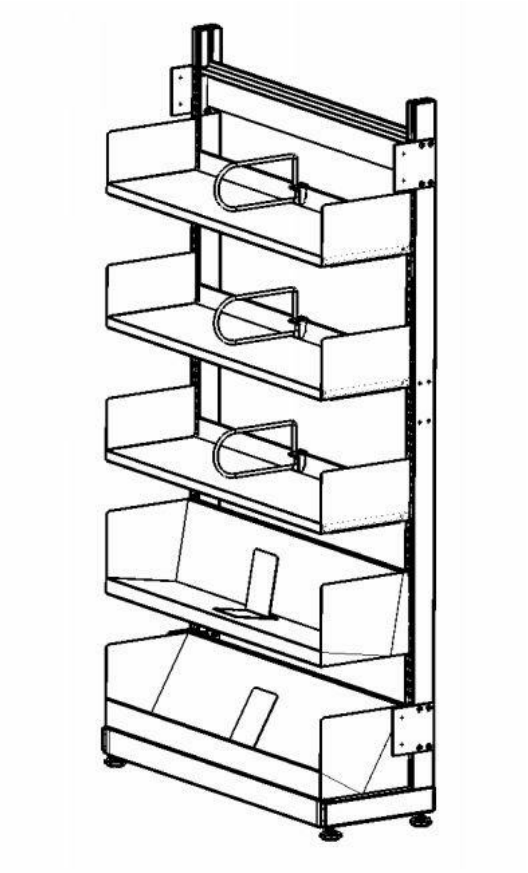

OPN ARCHITECTS

Joplin Public Library

SH-24
ITEM CODE

FURNITURE SPECIFICATIONS

JOPLIN PUBLIC LIBRARY

PROJECT NO: 14289000
JOPLIN, MISSOURI
ISSUE DATE: 10/14/2016

FF&E BASIS OF DESIGN
Shelving

Manufacturer listed as basis of design only. Equal alternates can be submitted for review.

ITEM INFORMATION:

Type Mark	Collection	Count	6" Acrylic Signage	Width	Shelving Depth	Height
SH-24	Adult Fiction	2	No	36"	SF 10"D	66"

SIDE ONE:

Base	10" D Sloped Display Shelf, 30 degree
Row 2	10" D Sloped Display Shelf, 10 degree
Rows 3,4,5	10" D Flat Shelf with Book Stop

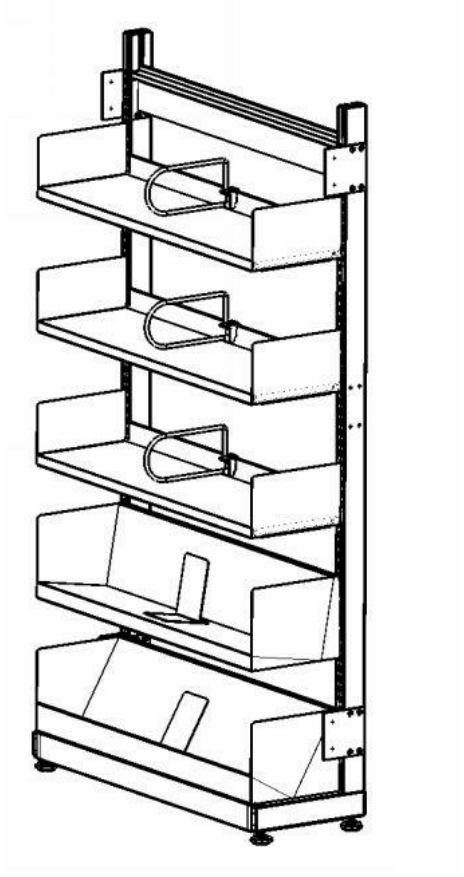

OPN ARCHITECTS

Joplin Public Library

SH-25
ITEM CODE

FURNITURE SPECIFICATIONS

JOPLIN PUBLIC LIBRARY

PROJECT NO: 14289000
JOPLIN, MISSOURI
ISSUE DATE: 10/14/2016

FF&E BASIS OF DESIGN
Shelving

Manufacturer listed as basis of design only. Equal alternates can be submitted for review.

ITEM INFORMATION:

Type Mark	Collection	Count	6" Acrylic Signage	Width	Shelving Depth	Height
SH-25	Adult Non-Fiction	52	Yes	36"	12"D/12"D	66"

SIDE ONE:

Rows 1,2 12" D Sloped Display Shelf, 10 degree
Rows 3,4,5 12" D Flat Shelf with Book Stop

SIDE TWO:

Rows 1,2 12" D Sloped Display Shelf, 10 degree
Rows 3,4 12" D Flat Shelf with Book Stop
Row 5 MD Zig Zag Shelf with Lip, 3 Compartments

OPN ARCHITECTS

Joplin Public Library

SH-26
ITEM CODE

FURNITURE SPECIFICATIONS

JOPLIN PUBLIC LIBRARY

PROJECT NO: 14289000
JOPLIN, MISSOURI
ISSUE DATE: 10/14/2016

FF&E BASIS OF DESIGN
Shelving

Manufacturer listed as basis of design only. Equal alternates can be submitted for review.

ITEM INFORMATION:

Type Mark	Collection	Count	6" Acrylic Signage	Width	Shelving Depth	Height
SH-26	Adult Non-Fiction	34	Yes	36"	12"D/12"D	66"

BOTH SIDES:

Rows 1,2 12" D Sloped Display Shelf, 10 degree
Rows 3,4,5 12" D Flat Shelf with Book Stop

OPN ARCHITECTS

Joplin Public Library

SH-27
ITEM CODE

FURNITURE SPECIFICATIONS

JOPLIN PUBLIC LIBRARY

PROJECT NO: 14289000
JOPLIN, MISSOURI
ISSUE DATE: 10/14/2016

FF&E BASIS OF DESIGN
Shelving

Manufacturer listed as basis of design only. Equal alternates can be submitted for review.

ITEM INFORMATION:

Type Mark	Collection	Count	6" Acrylic Signage	Width	Shelving Depth	Height
SH-27	Adult Non-Fiction	13	Yes	36"	12"D/12"D	66"

SIDE ONE:

Rows 1,2 12" D Sloped Display Shelf, 10 degree
Rows 3,4,5 12" D Flat Shelf with Book Stop

SIDE TWO:

Rows 1,2 12" D Sloped Display Shelf, 10 degree
Row 3 12"D Pull Out Reference Shelf
Rows 4,5 12" D Flat Shelf with Book Stop

OPN ARCHITECTS

Joplin Public Library

SH-28a
ITEM CODE

FURNITURE SPECIFICATIONS

JOPLIN PUBLIC LIBRARY

PROJECT NO: 14289000
JOPLIN, MISSOURI
ISSUE DATE: 10/14/2016

FF&E BASIS OF DESIGN
Shelving

Manufacturer listed as basis of design only. Equal alternates can be submitted for review.

ITEM INFORMATION:

Type Mark	Collection	Count	6" Acrylic Signage	Width	Shelving Depth	Height
SH-28a	Teen Feature Wall	7	No	36"	SF 10"D	42"

SIDE ONE:

Base	10" D Sloped Display Shelf, 30 degree
Row 2	10" D Sloped Display Shelf, 10 degree
Row 3	MD Zig Zag Shelf with Lip, 4 Compartments

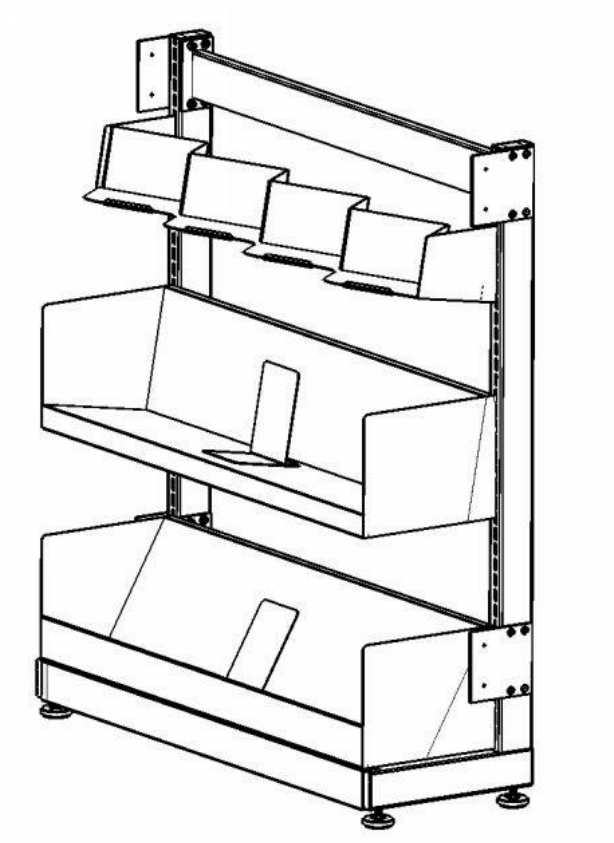

OPN ARCHITECTS

Joplin Public Library

SH-28b
ITEM CODE

FURNITURE SPECIFICATIONS

JOPLIN PUBLIC LIBRARY

PROJECT NO: 14289000
JOPLIN, MISSOURI
ISSUE DATE: 10/14/2016

FF&E BASIS OF DESIGN
Shelving

Manufacturer listed as basis of design only. Equal alternates can be submitted for review.

ITEM INFORMATION:

Type Mark	Collection	Count	6" Acrylic Signage	Width	Shelving Depth	Height
SH-28b	Non-Fiction Feature Wall	7	No	36"	SF 10"D	42"

SIDE ONE:

Base	10" D Sloped Display Shelf, 30 degree
Row 2	10" D Sloped Display Shelf, 10 degree
Row 3	MD Zig Zag Shelf with Lip, 3 Compartments

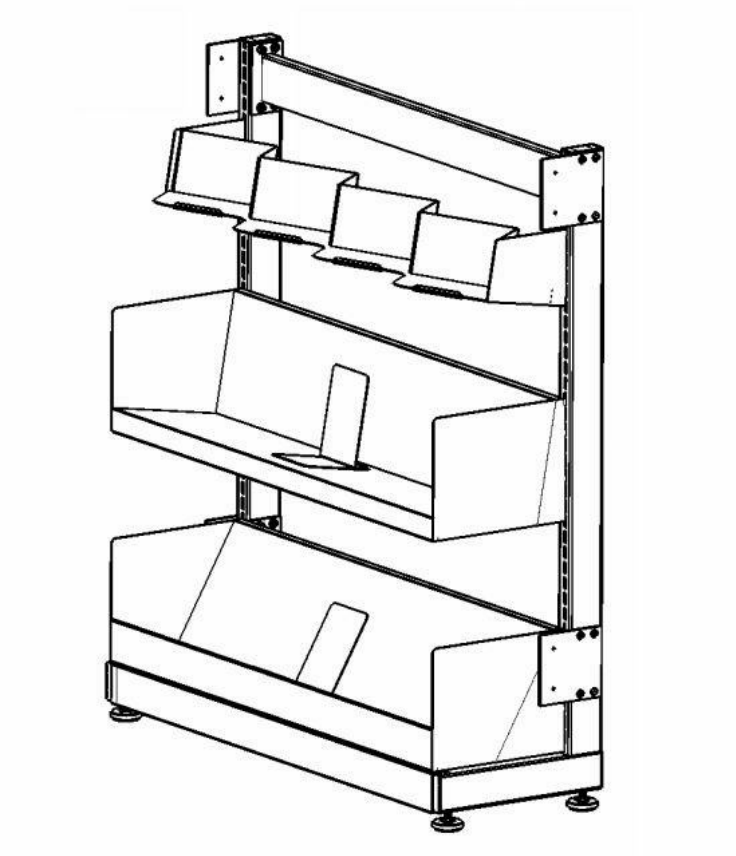

OPN ARCHITECTS

Joplin Public Library

SH-29
ITEM CODE

FURNITURE SPECIFICATIONS

JOPLIN PUBLIC LIBRARY

PROJECT NO: 14289000
JOPLIN, MISSOURI
ISSUE DATE: 10/14/2016

FF&E BASIS OF DESIGN
Shelving

Manufacturer listed as basis of design only. Equal alternates can be submitted for review.

ITEM INFORMATION:

Type Mark	Collection	Count	6" Acrylic Signage	Width	Shelving Depth	Height
SH-29	Adult Non-Fiction	4	Yes	30"	12"D/12"D	66"

BOTH SIDES:

Rows 1,2 12" D Sloped Display Shelf, 10 degree
Rows 3,4,5 12" D Flat Shelf with Book Stop

OPN ARCHITECTS

Joplin Public Library

SH-30
ITEM CODE

FURNITURE SPECIFICATIONS

JOPLIN PUBLIC LIBRARY

PROJECT NO: 14289000
JOPLIN, MISSOURI
ISSUE DATE: 10/14/2016

FF&E BASIS OF DESIGN
Shelving

Manufacturer listed as basis of design only. Equal alternates can be submitted for review.

ITEM INFORMATION:

Type Mark	Collection	Count	6" Acrylic Signage	Width	Shelving Depth	Height
SH-30	Adult Non-Fiction	4	No	36"	SF 12"D	66"

SIDE ONE:

Rows 1,2 12" D Sloped Display Shelf, 10 degree
Rows 3,4,5 12" D Flat Shelf with Book Stop

OPN ARCHITECTS

Joplin Public Library

SH-31
ITEM CODE

FURNITURE SPECIFICATIONS

JOPLIN PUBLIC LIBRARY

PROJECT NO: 14289000
JOPLIN, MISSOURI
ISSUE DATE: 10/14/2016

FF&E BASIS OF DESIGN
Shelving

Manufacturer listed as basis of design only. Equal alternates can be submitted for review.

ITEM INFORMATION:

Type Mark	Collection	Count	6" Acrylic Signage	Width	Shelving Depth	Height
SH-31	Adult Non-Fiction	2	No	30"	SF 12"D	66"

SIDE ONE:

Rows 1,2 12" D Sloped Display Shelf, 10 degree
Rows 3,4,5 12" D Flat Shelf with Book Stop

OPN ARCHITECTS

Joplin Public Library

SHCC-1
ITEM CODE

FURNITURE SPECIFICATIONS

JOPLIN PUBLIC LIBRARY

PROJECT NO: 14289000
JOPLIN, MISSOURI
ISSUE DATE: 10/14/2016

FF&E BASIS OF DESIGN
Shelving Custom Components

Manufacturer listed as basis of design only. Equal alternates can be submitted for review.

ITEM INFORMATION:

Type Mark	Custom Component Type	Count	Width	Height	Depth	Thickness
SHCC-1	Shelving Tunnel	4	36"	48"	34"	1"

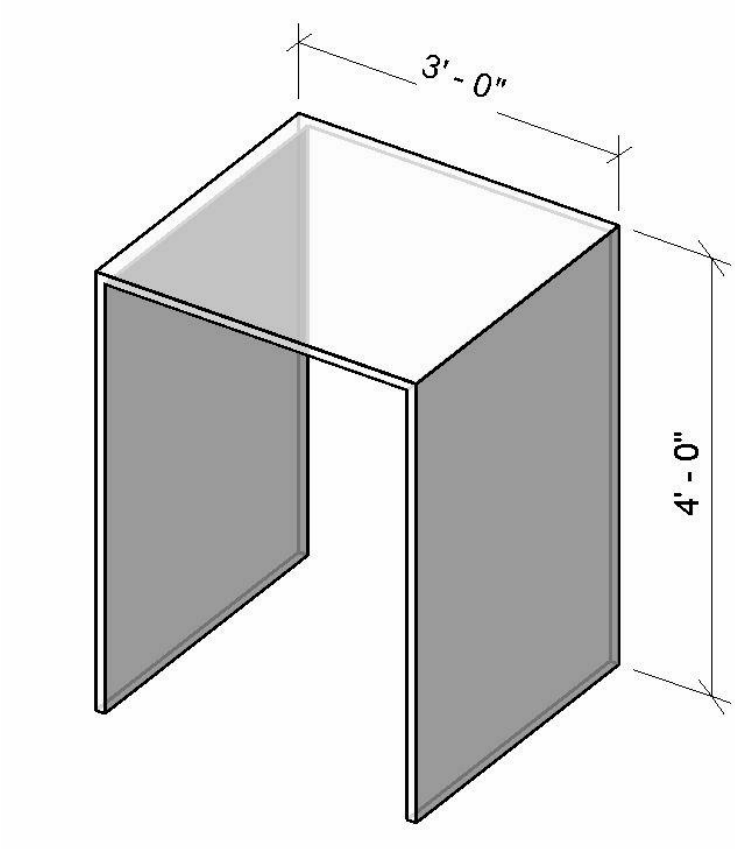

NOTE:
Custom tunnels to be the equivalence of one section of SH-1 shelving, or 34"Dx36"Wx48"H. Material shall be 1" thick Acrylic Lightblocks, color "Dry Ice". Joints shall have miter-fold to join top with sides. Sides of tunnel must be secured to shelving sections on both sides to maintain stability. No fasteners are to be visible from inside of tunnel.

OPN ARCHITECTS