32nd STREET WIDENING
CENTRAL CITY RD. TO SCHIFFERDECKER AVE.
JASPER & NEWTON COUNTY, MISSOURI

Mandatory Pre-Bid Meeting:
May 13th at 10:30 AM

Bid Opening:
June 3rd at 2:00 PM





PUBLIC WORKS DEPARTMENT

602 S. Main Street, Joplin Missouri 64801
Phone: 417-624-0820 Ext. 530 FAX: 417-625-4738

This Page Intentionally Left Blank

TABLE OF CONTENTS

SECTION PAGES

Project Manual Cover Sheet 1
Table of Contents 1

Section A: Information for Bidders
Bid Advertisement / Notice to Contractors 2
Information for Bidders 4
Special Conditions 2

Section B: Documents Needed at Bid Opening
Proposal 9
Bid Bond 1
Bidder Qualifications and Certifications 3
Contractor Past Performance Questionnaire 2
Subcontractor Disclosure Form 1
Non-Collusion Affidavit 1

Section C: Documents Needed at Contract Execution
Agreement 10
Performance Bond 3
Payment Bond 3
FWAP Affidavit 2
Certification Concerning Equal Employment Opportunity 1

Section D: Documents Needed Throughout Construction
Waiver and Release of Lien 1
Certificate of Contractor 1

Section E: Prevailing Wage
State of Missouri Prevailing Wage Law and Rules 1
State of Missouri DOL Annual Wage Order – Jasper County No. 27 4
State of Missouri DOL Annual Wage Order – Newton County No. 27 4
Prevailing Wage Law, Chapter 290 8
Rules of Department of Labor and Industrial Relations 2
Affidavit of Compliance with the Prevailing Wage Law 1
Statement of Compliance 1

Appendices
Appendix A Job Special Provisions
Appendix B Storm Water Pollution Prevention Plan
Appendix C Geotechnical Report
Appendix D USACE Permit SWL-2021-00069
Appendix E Missouri American Water – Water Pipeline Technical Specifications/Details

Technical Specifications
City of Joplin Standard Specifications dated 02/15/2021 shall be included by reference

SECTION A:

INFORMATION FOR BIDDERS

BID ADVERTISEMENT / NOTICE TO CONTRACTORS

Notice is hereby given that the Director of Public Works of the City of Joplin, Missouri, will accept sealed bids for the following improvements in the City of Joplin, Missouri:

32nd Street Widening
Central City Rd. to Schifferdecker Ave.
Jasper and Newton County, Missouri

Project generally consists of the full depth reconstruction and widening of 32nd Street to a 3-lane curb & gutter section from Central City Road to Schifferdecker Avenue (approximately 9,200 linear feet), including grading, base, curb & gutter, asphalt pavement, driveways, sidewalks, intersections, storm sewer, sanitary sewer, water line, retaining walls, fencing, traffic signal, pavement markings, erosion control, seeding & sodding, traffic control, and other appurtenances required for a complete project.

Bids must be in the hands of the City of Joplin Director of Public Works before 2:00 PM prevailing local time on June 3, 2021 at which time all bids will be opened by the Director of Public Works at the Joplin City Hall, 602 S. Main Street, Joplin MO 64801 in the 5th Floor Study.

Copies of the plans and specifications are on file and may be examined at the offices of the City of Joplin located at 602 S Main St. Joplin, Missouri 64801 or on the City's website (https://www.joplinmo.org/Bids.aspx?CatID=17).

Plans and Specifications must be secured at City of Joplin located at 602 S Main St. Joplin, Missouri 64801 or through the City of Joplin's website (https://www.joplinmo.org/Bids.aspx?CatID=17).

PLEASE NOTE: Official plan holders list will only be the list maintained by the City of Joplin. It is the sole responsibility of all plan holders, whether they have received digital downloads or paper copies of the plans and specifications, to return to the City's website periodically to check for Addenda which may have been posted. Neither the Owner nor Engineer has any responsibility for the accuracy, completeness or sufficiency of any bid documents obtained from any source other than the source indicated in these documents. Obtaining these documents from any other source(s) may result in obtaining incomplete and inaccurate information. Obtaining these documents from any source other than directly from the source listed herein may also result in failure to receive any addenda, corrections, or other revisions to these documents that may be issued.

Questions regarding bids shall be directed to Olsson – Attn: Brian Coomes, P.E. consulting engineer at (620) 670-5102 or by email at bcoomes@olsson.com.

A MANDATORY Pre-bid Meeting will be held at 10:30 AM May 13, 2021 in Joplin City Hall, 5th Floor Study. All bidders are required to attend the Pre-Bid Meeting and sign the attendance sheet at the meeting. Bids received from bidders who have not attended the Pre-Bid Meeting and signed the attendance sheet at the meeting will be considered nonresponsive.

The wage rates applicable to this project have been predetermined as required by law and are set forth in the construction specifications and are to be considered as a part of this Notice to Contractors.

A detailed listing of all subcontractors shall be provided by the Bidder. In accordance with the Contract Documents, documentation that the prospective General Contractor and its subcontractors meet minimum qualifications shall be provided and submitted.

Payment for this project will be made to the contractor in cash.

A bid bond or certified check for five percent (5%) of the total bid amount must accompany each bid. The successful bidder will be required to furnish a performance bond in the amount of his bid and shall, before entering on the work of said contract, be licensed as a contractor of the City of Joplin, Missouri. The Director of Public Works reserves the right to reject any or all bids.

The City of Joplin hereby notifies all bidders that it will affirmatively insure that in any contract entered into pursuant to this advertisement, Disadvantaged Business Enterprises will be afforded full opportunity to submit bids in response to this invitation and will not be discriminated against on the grounds of race, color, sex, or national origin in consideration for an award.

David Hertzberg, P.E.
DIRECTOR OF PUBLIC WORKS

INFORMATION FOR BIDDERS

1. Receipt and Opening of Bids: The City of Joplin (herein called the "Owner"), invites bids on the form attached hereto, all blanks of which must be appropriately filled in. Bids must be in the hands of the City of Joplin Director of Public Works before **2:00 PM prevailing local time on June 3, 2021** at which time all bids will be opened by the Director of Public Works at the Joplin City Hall, 602 S. Main Street, Joplin MO 64801 in the 5th Floor Study. The envelopes containing the bids must be sealed, addressed to the City of Joplin, 602 S. Main Street, Joplin, Missouri and designated as bid for:

   32nd Street Widening
   Central City Rd. to Schifferdecker Ave.
   Jasper and Newton County, Missouri

   The Owner may consider informal any bid not prepared and submitted in accordance with the provisions hereof and may waive any informalities or reject any and all bids. Any bid may be withdrawn prior to the above scheduled time for the opening of bids or authorized postponement thereof. Any bid received after the time and date specified shall not be considered. No bidder may withdraw a bid within ninety (90) days after the actual date of the opening thereof.

2. Pre-Bid Conference: A mandatory pre-bid conference will be held at the time and location indicated in the Bid Advertisement / Notice to Contractors.

   a. Representatives of Owner and Engineer will be present to discuss the Project. Proposals will not be accepted from Bidders who do not attend the conference. It is each Bidder's responsibility to sign in at the pre-bid conference to verify its participation. Bidders must sign in using the name of the organization that will be submitting a Bid. A list of qualified Bidders that attended the pre-bid conference and are eligible to submit a Bid for this Project will be issued in an Addendum

   b. Information presented at the pre-Bid conference does not alter the Contract Documents. Owner will issue Addenda to make any changes to the Contract Documents that result from discussions at the pre-Bid conference. Information presented and statements made at the pre-bid conference will not be binding or legally effective unless incorporated in an Addendum.

3. Preparation of Bid: Each bid must be submitted on the required BID form, included as part of these specifications. All blank spaces for bid prices must be filled in, in ink or typewritten, and the foregoing Certifications must be fully completed and executed when submitted.

4. Subcontracts: The bidder is specifically advised that any person, or other party, to whom it is proposed to award a subcontract under this contract:

   a. Must be acceptable to the procurer; and

   b. Subcontractors must comply with all requirements related to this project, including certifications, in the event the bidder is successful in obtaining this work.

5. Telegraphic Modification: Any bidder may modify his bid by telegraphic communication at any time prior to the scheduled closing time for receipt of bids, provided such telegraphic communication is received by the Owner prior to the closing time, and, provided further, the Owner is satisfied that a written confirmation of the telegraphic modification over the signature of the bidder was mailed prior to the closing time. The telegraphic communication should not reveal the bid price, but should provide the addition or subtraction or other modification so that the final prices or terms will not be known by the Owner until the sealed bid is opened. If written confirmation is not received within two days from the closing time, no consideration will be given to the telegraphic modification.

6. Method of Bidding: The Owner invites the following bid(s): Unit Price submission for **32nd Street Widening – Central City Rd. to Schifferdecker Ave.** in compliance with project drawings, specifications and contract documents. Award of the contract shall be based upon the lowest responsive, responsible bid submitted for the Total Contract Base Bid Amount. The OWNER reserves the right to add or subtract quantities from the Project Contract at the Unit Prices submitted, as necessary.

7. Qualifications of Bidder: The Owner may make such investigations as he deems necessary to determine the ability of the bidder to perform the work, and the bidder shall furnish to the Owner all such information and data for this purpose as the Owner may request. The Owner reserves the right to reject any bid if the evidence submitted by, or investigation of, such bidder fails to satisfy the owner that such bidder is properly qualified to carry out the obligations of the contract and to complete the work contemplated therein. Conditional bids will not be accepted.

8. Bid Security: Each bid must be accompanied by a bid bond payable to the Owner for five percent (5%) of the total amount of the bid. As soon as the bid prices have been compared, the Owner will return all of the bonds except the three lowest responsible bidders. When the agreement is executed, the bonds of the two remaining unsuccessful bidders will be returned. The bid bond of the successful bidder will be retained until the payment bond and performance bond have been executed and approved, after which it will be returned. A certified check may be used in lieu of a bid bond.

9. Liquidated Damages for Failure to Enter into Contract: The successful bidder, upon his failure or refusal to execute and deliver the contract and bonds required within 10 days after he received notice of the acceptance of his bid, shall forfeit to the Owner, as liquidated damages for such failure or refusal, the security deposited with his bid.

10. Time of Completion and Liquidated Damages: Bidder must agree to commence work on or before a date to be specified in a written "Notice to Proceed" of the Owner and to fully complete the project within the Time of Completion and Liquidated Damages requirements listed in the Proposal.

11. Conditions of Work: Each bidder must inform himself fully of the conditions relating to the construction of the project and the employment of labor thereon. Failure to do so will not relieve a successful bidder of his obligation to furnish all material and labor necessary to carry out the provisions of his contract. Insofar as possible the contractor, in carrying out the work, must employ such methods or means as will not cause any interruption of or interference with the work of any other contractor.

12. Addenda and Interpretations: No interpretation of the meaning to the plans, specifications, or other pre-bid documents will be made to any bidder orally. Every request for such interpretation should be addressed in writing addressed to the Consulting Engineer: Olsson – Attn: Brian Coomes, P.E. bcoomes@olsson.com. To be given consideration, written requests must be received at least seven (7) days prior to the date fixed for the opening of bids. Interpretations, supplemental instructions or clarifications considered necessary by the Engineer in response to such questions will be issued in the form of written addenda to the contract documents and specifications which, if issued, will be posted to the City of Joplin's website (https://www.joplinmo.org/Bids.aspx?CatID=17) or can be located at the City of Joplin, 602 S Main St. Joplin, MO 64801, not later than three (3) days prior to the date fixed for the opening of bids. Questions received less than seven (7) days prior to the date for opening of bids may not be answered. Only answers issued by Addenda will be binding. Oral and other interpretations or clarifications will be without legal effect. Failure of any bidder to receive any such addendum or interpretation shall not relieve such bidder from any obligation under his bid as submitted. All addenda so issued shall become part of the contract documents.

13. Security for Faithful Performance: Simultaneously with the delivery of the executed contract, the Contractor shall furnish a surety bond or bonds as security for faithful performance of this contract and for the payment of all persons performing labor on the project under this contract and furnishing materials in connection with this contract, as specified in the Agreement included herein. The surety on such bond or bonds shall be a duly authorized surety company satisfactory to the Owner.

14. Power of Attorney: Attorneys-in-fact who sign bid bonds or contract bonds must file with each bond a certified and effectively dated copy of their power of attorney.

15. Notice of Special Conditions: Attention is particularly called to those parts of the contract documents and specifications which deal with the following:

    a. Inspection and testing of materials.

    b. Insurance requirements.

    c. Wage rates.

    d. Stated allowances.

16. Laws and Regulations: The bidder's attention is directed to the fact that all applicable State laws, municipal ordinances, and the rules and regulations of all authorities having jurisdiction over construction of the project shall apply to the contract throughout, and they will be deemed to be included in the contract the same as though herein written out in full.

17. Method of Award - Lowest Qualified Bidder: Award of the contract shall be based upon the lowest responsive, responsible bid submitted for the Total Contract Base Bid Amount. The OWNER reserves the right to add or subtract quantities from the Project Contract at the Unit Prices submitted, as necessary.

18. Obligation of Bidder: At the time of the opening of bids, each bidder will be presumed to have inspected the site and to have read and to be thoroughly familiar with the plans and contract documents (including all addenda). The failure or omission of any bidder to examine any form, instrument, or document shall in no way relieve any bidder from any obligation in respect or his bid.

    a. Bidders are informed that pursuant to Section 285.530, RSMo, as a condition of the award of any contract in excess of five thousand dollars ($5,000), the successful bidder shall, by sworn affidavit and provision of documentation, affirm its enrollment and participation if a federal work authorization program with respect to the employees working in connection to the contracted services. Successful bidders shall also sign an affidavit affirming that it does not knowingly employ any person who is an unauthorized alien in connection to the contracted services.

19. Safety Standards and Accident Prevention: With respect to all work performed under this contract, the contractor shall:

    a. Comply with the safety standards provisions of applicable laws, building and construction codes, and the "Manual of Accident Prevention in Construction" published by the Associated General Contractors of America, the requirements of the Occupational Safety and Health Act of 1970 (Public Law 91-596), and the requirements of Title 29 of the Code of Federal Regulations, Section 1518 as published in the "Federal Register", Volume 36, No. 75, Saturday, April 17, 1971.

    b. Exercise every precaution at all times for the prevention of accidents and the protection of persons (including employees) and property.

    c. Maintain at his office or other well-known place at the job site, all articles necessary for giving first aid to the injured and shall make arrangements for the immediate removal to a hospital

or a doctor's care of persons (including employees) who may be injured on the job site. In no case shall employees be permitted to work at a job site before the employer has made a standing arrangement for removal of injured persons to a hospital or a doctor's care.

20. Bidders are informed that the Project is subject to the requirements of Section 292.675, RSMo, which requires all contractors or subcontractors doing work on the Project to provide, and require its on-site employees to complete, a ten (10) hour course in construction safety and health approved by the Occupational Safety and Health Administration ("OSHA") or a similar program approved by the Missouri Department of Labor and Industrial Relations which is at least as stringent as an approved OSHA program. The training must be completed within sixty (60) days of the date of work on the Project commences. On-site employees found on the worksite without documentation of the required training shall have twenty (20) days to procure documentation or be subject to removal from the Project.

21. A contract award (see 2 CFR 180.220) must not be made to parties listed on the government wide exclusions in the System for Award Management (SAM), in accordance with the OMB guidelines at 2 CFR 180 that implement Executive Orders 12549 (3 CFR part 1986 Comp., p. 189) and 12689 (3 CFR part 1989 Comp., p. 235), "Debarment and Suspension." SAM Exclusions contains the names of parties debarred, suspended, or otherwise excluded by agencies, as well as parties declared ineligible under statutory or regulatory authority other than Executive Order 12549. The Contractor represents and warrants that it and its subcontractors are not debarred, suspended, or placed in ineligibility status under the provisions of 2 CFR §2424 (government debarment and suspension regulations) or by the City of Joplin.

22. Contractor's Responsibility for Subcontractors:

    a. The Contractor shall be as fully responsible to the City for the acts and omissions of its subcontractors, and of persons either directly or indirectly employed by them, as Contractor is for the acts and omissions of persons it directly employs.

    b. Contractor shall cause appropriate provisions to be inserted in all subcontracts relating to this work, to bind all subcontractors to Contractor by all the terms herein set forth, and insofar as applicable to the work of subcontractors and to give Contractor the same power regarding termination of any subcontract as the City may exercise over Contractor under any provisions of this contract.

    c. Nothing contained in this contract shall create any contractual relation between the subcontractor and the City or between any subcontractors.

SPECIAL CONDITIONS

Project:

32nd Street Widening
Central City Rd. to Schifferdecker Ave.
Jasper and Newton County, Missouri

1. Subcontracts – Missouri American Water: Relocation of water facilities owned by Missouri American Water are included as part of the Contractor's scope of work. This work must be completed by a pre-qualified Missouri American Contractor. Pre-qualified Contractors consist of the following:

   a. Goins Construction LLC
   b. Branco Enterprises, Inc.
   c. Emery Sapp & Sons
   d. Kenny Singer Construction Co.

   If Prime Contractor is not pre-qualified to construct Missouri American Water facilities, this work must be performed by a pre-qualified subcontractor. Missouri American Water will furnish a separate certified inspector to perform oversight and testing of the new water facilities.

2. Wage rates for this project shall be in accordance with wage rate determination made by the Missouri Department of Labor and Industrial Relations on file in the Department of Public Works. The wage rates applicable to this project have been predetermined as required by law and are set forth in the construction specifications and are to be considered as a part of this Notice to Contractors.

3. Contractors are cautioned that unbalanced bids can be rejected. The City reserves the right to reject or delete any part of the bid.

4. The City will issue a notice to proceed after the signing of the contract.

5. All work shall be in accordance with 2021 City of Joplin Standard Specifications that are in effect on the City of Joplin website on February 15, 2021. In occurrences where specification sections, drawings, drawing details or other notations address the same or similar items, methods or materials, the more stringent requirements shall govern.

6. Contractors shall abide by the requirements set by the United States Access Board for ADA guidelines and standards (ADAAG) by following the ADAAG standards for Public Right of Ways (PROWAG). The contractor is required to familiarize themselves with the PROWAG guidelines, latest edition. Details provided on the plans are designed to the new requirements but due to lack of survey information the contractor needs to verify in the field that all slope requirements can be met. If the requirements cannot be met, it is the responsibility to notify the City Engineer immediately for redesign or an alternative slope requirement within the PROWAG guidelines.

7. Bidder hereby agrees to commence work under this contract on or before a date to be specified in the Notice to Proceed, and to fully complete the project awarded to them within the contract time requirements listed in the Proposal Form

8. Sales Tax Exemption: Senate Bill 477 has expanded the provisions of Section 144.062 of the Revised Statutes of Missouri (RSMo) to allow contractors to make tax-free purchases of materials and equipment for projects owned by tax-exempt entities. This change in Section 144.062 RSMo

became effective on August 28, 1994. Purchases of construction materials, by the Contractor, for this project are exempt from sales tax. Prior to being eligible for this exemption, the attached "Missouri Project Exemption Certificate" must be completed by the Owner and presented to the Contractor. For more information about this exemption, the bidder may contact the Missouri Department of Revenue, Technical Support Section, Jefferson City, Missouri (573-751-2836).

DIVISION OF ENGINEERING
DEPARTMENT OF PUBLIC WORKS

SECTION B:

DOCUMENTS NEEDED AT BID OPENING

***The documents provided in this section are required IN ADDITION to all contract requirements. Exceptions will be dealt with on a case-by-case basis.*

PROPOSAL

THE UNDERSIGNED hereby proposes to furnish the labor and material for:

Project:
32nd Street Widening
Central City Rd. to Schifferdecker Ave.
Jasper and Newton County, Missouri

in the City of Joplin, Missouri, according to the Drawings, Contract Documents and general specifications for such work on file in the office of the City Engineer and Director of Public Works, together with the terms and conditions to be stipulated in the general contract forms, now adopted by the City of Joplin, as advertised to be let on June 3, 2021, at the following prices to-wit:

ITEM NO.	SPEC. NO.	DESCRIPTION	UNIT	ESTIMATED QUANTITY	UNIT PRICE	TOTAL AMOUNT
1	JSP-0400-04	Mobilization	LS	1	$	$
2	JSP-0400-05	Contractor Furnished Construction Staking and Surveying	LS	1	$	$
3	JSP-1100-01	Clearing & Grubbing / Tree & Brush Removal	LS	1	$	$
4	JSP-1100-02	Demolition & Removal	LS	1	$	$
5	JSP-1000-01	Temporary Seeding, Fertilizing, and Mulching	ACRE	5	$	$
6	JSP-1000-01	Erosion Control Blanket (MoDOT Type 2.D)	SY	17,867	$	$
7	JSP-1000-01	8" Biodegradable Log	LF	30,030	$	$
8	JSP-1000-01	12" Biodegradable Log	LF	2,766	$	$
9	JSP-1000-01	Curb Inlet/Area Inlet Protection	EA	63	$	$
10	JSP-1000-01	Culvert Inlet Protection	EA	20	$	$
11	City 5100	Permanent Seeding, Fertilizing and Mulching (Hydroseed Cellulose Mulch)	ACRE	9	$	$
12	JSP-5100-01	Modify & Repair Existing Irrigation Systems	LS	1	$	$
13	City 5200	Kentucky Bluegrass Sodding	SY	8,986	$	$
14	City 5200	Turf Type Tall Fescue Sodding	SY	1,000	$	$
15	City 5200	Bermuda Sodding	SY	1,000	$	$

ITEM NO.	SPEC. NO.	DESCRIPTION	UNIT	ESTIMATED QUANTITY	UNIT PRICE	TOTAL AMOUNT
16	City 5200	Zoysia Sodding	SY	1,000	$	$
17	City 1200	Unclassified Excavation*	CY	84,873	$	$
18	JSP-1200-01	Embankment*	CY	29,180	$	$
19	JSP-1200-01	Embankment (Special)(Minimum 40% Chert)*	CY	52,776	$	$
20	City 1200	Imported Fill*	CY	17,850	$	$
21	City 1200	Removal of Unsuitable Material	CY	8,487	$	$
22	City 1200	Backfill of Unsuitable Material	CY	8,487	$	$
23	City 1800	Removal, Transportation & Disposal of Contaminated Soils	CY	8,487	$	$
24	JSP-2300-01	Milling	SY	1,158	$	$
25	City 2200	Asphaltic Concrete Surface (2") (MoDOT BP-1)	TONS	4,356	$	$
26	City 2200	Asphaltic Concrete Surface (4") (MoDOT BP-1)	TONS	51	$	$
27	City 2200	Asphaltic Concrete Base (8") (MoDOT Bituminous Base)	TONS	17,424	$	$
28	JSP-1400-01	8" MoDOT Type 5 Aggregate Base	SY	43,652	$	$
29	JSP-1400-02	6" MoDOT Type 1 Aggregate Surface	SY	1,254	$	$
30	JSP-1400-02	Temporary Surfacing Material (Aggregate)(MoDOT Type 1)	TONS	300	$	$
31	City 2200	Temporary Surfacing Material (HMA MoDOT BP-1)	TONS	754	$	$
32	JSP-3100-01	8" Concrete Pavement (Gutter Crossing incl. Integral Curb)	SY	166	$	$
33	City 3100	8" Concrete Pavement (Roadway)	SY	946	$	$
34	JSP-3200-01	2'-6" Curb & Gutter, Combined (All Types)	LF	19,505	$	$
35	JSP-3100-02	Curb Flume (3' wide)	LF	14	$	$
36	JSP-3100-02	Concrete Flume (6' wide)	LF	111	$	$
37	JSP-3300-01	4" Sidewalk Construction (Incl. 2" MoDOT Type 5 Agg. Base)	SY	8,417	$	$
38	JSP-3300-01	Curb Ramp (Incl. 2" MoDOT Type 5 Agg. Base)	SY	352	$	$
39	JSP-3400-01	Residential Driveway Construction (6" Concrete)(Inc. 4" MoDOT Type 5 Agg. Base)	SY	569	$	$

ITEM NO.	SPEC. NO.	DESCRIPTION	UNIT	ESTIMATED QUANTITY	UNIT PRICE	TOTAL AMOUNT
40	JSP-3400-01	Commercial Driveway Construction (8" Concrete) (Incl. 4" MoDOT Type 5 Agg. Base)	SY	1,032	$	$
41	JSP-3300-02	Cast-in-Place Concrete Wall (Sidewalk)	SF	88	$	$
42	Plan Sheet B80	Cast-in-Place Concrete Wall (Sidewalk)(Special)	SF	505	$	$
43	Plan Sheet B81-B82	Soldier Pile Retaining Wall	SF	1,804	$	$
44	Plan Sheet B81-B82	Type D Barrier w/ Integral Reinforced Slab	LF	380	$	$
45	City 2307	Relocate Existing Vinyl Fence	LF	135	$	$
46	City 2307	Relocate or Replace Existing Vinyl Fence (Southern Trails)	LF	560	$	$
47	City 2307	Temporary Fencing (Chain Link)	LF	1,465	$	$
48	City 2307	Temporary Gate	EA	2	$	$
49	JSP-2307-01	Relocate Existing Power Service for Gate	LS	1	$	$
50	City 4400	Type A Catch Basin 3'x3' I.D.	EA	4	$	$
51	City 4400	Type C Inlet 4'x7' I.D.	EA	2	$	$
52	City 4400	Type C Inlet 6'x3' I.D.	EA	9	$	$
53	City 4400	Type C Inlet 6'x4' I.D.	EA	2	$	$
54	City 4400	Type C Inlet 6'x5' I.D.	EA	1	$	$
55	City 4400	Type C Inlet 6'x6' I.D.	EA	1	$	$
56	City 4400	Type C Inlet 8'x3' I.D.	EA	1	$	$
57	City 4400	Type C Inlet 8'x4' I.D.	EA	5	$	$
58	City 4400	Type D Inlet 3'x7' I.D.	EA	7	$	$
59	City 4400	Type D Inlet 4'x7' I.D.	EA	9	$	$
60	City 4400	Type D Inlet 6'x3' I.D.	EA	1	$	$
61	City 4400	Type D Inlet 6'x4' I.D.	EA	2	$	$
62	City 4400	Type D Inlet 8'x3' I.D.	EA	2	$	$
63	City 4400	Type D Inlet 8'x4' I.D.	EA	1	$	$

ITEM NO.	SPEC. NO.	DESCRIPTION	UNIT	ESTIMATED QUANTITY	UNIT PRICE	TOTAL AMOUNT
64	City 4400	Area Inlet 3'x3' I.D.	EA	2	$	$
65	City 4400	Area Inlet 4'x3' I.D.	EA	1	$	$
66	City 4400	Area Inlet 4'x4' I.D.	EA	2	$	$
67	City 4400	Area Inlet 5'x4' I.D.	EA	1	$	$
68	City 4400	Area Inlet 8'x4' I.D.	EA	1	$	$
69	City 4400	Junction Box 3'x3' I.D.	EA	1	$	$
70	City 4400	Junction Box 4'x4' I.D.	EA	3	$	$
71	City 4400	4' Diameter Manhole - Storm Sewer	EA	1	$	$
72	JSP-4400-01	Precast Drop Inlet (MoDOT Type S-1)	EA	1	$	$
73	City 4200	12" Class III RCP (including trenching, bedding, backfill, gaskets, and concrete collars)	LF	67	$	$
74	City 4200	15" Class III RCP (including trenching, bedding, backfill, gaskets, and concrete collars)	LF	2,192	$	$
75	City 4200	18" Class III RCP (including trenching, bedding, backfill, gaskets, and concrete collars)	LF	1,139	$	$
76	City 4200	24" Class III RCP (including trenching, bedding, backfill, gaskets, and concrete collars)	LF	2,807	$	$
77	City 4200	24" Class V RCP (including trenching, bedding, backfill, gaskets, and concrete collars)	LF	252	$	$
78	City 4200	30" Class III RCP (including trenching, bedding, backfill, gaskets, and concrete collars)	LF	1,445	$	$
79	City 4200	30" Class V RCP (including trenching, bedding, backfill, gaskets, and concrete collars)	LF	192	$	$
80	City 4200	36" Class III RCP (including trenching, bedding, backfill, gaskets, and concrete collars)	LF	142	$	$
81	City 4200	42" Class III RCP (including trenching, bedding, backfill, gaskets, and concrete collars)	LF	47	$	$
82	City 4200	48" Class V RCP (including trenching, bedding, backfill, gaskets, and concrete collars)	LF	168	$	$
83	City 4200	44"x27" Class III RCPA (including trenching, bedding, backfill, gaskets, and concrete collars)	LF	65	$	$

ITEM NO.	SPEC. NO.	DESCRIPTION	UNIT	ESTIMATED QUANTITY	UNIT PRICE	TOTAL AMOUNT
84	City 4200	19"x30" HE RCP (including trenching, bedding, backfill, gaskets, and concrete collars)	LF	35	$	$
85	City 4200	15" RCP FES (including trenching, bedding, backfill, gaskets, and concrete collars)	EA	6	$	$
86	City 4200	18" RCP FES (including trenching, bedding, backfill, gaskets, and concrete collars)	EA	10	$	$
87	City 4200	24" RCP FES (including trenching, bedding, backfill, gaskets, and concrete collars)	EA	6	$	$
88	City 4200	30" RCP FES (including trenching, bedding, backfill, gaskets, and concrete collars)	EA	2	$	$
89	City 4200	42" RCP FES (including trenching, bedding, backfill, gaskets, and concrete collars)	EA	1	$	$
90	City 4200	48" RCP FES (including trenching, bedding, backfill, gaskets, and concrete collars)	EA	2	$	$
91	City 4200	19"X30" HE RCP FES (including trenching, bedding, backfill, gaskets, and concrete collars)	EA	2	$	$
92	City 4200	24" RCP PRE-CAST TEE	EA	1	$	$
93	JSP-4200-01	108"x48" Reinforced Concrete Box Culvert (RCBC)	LF	204	$	$
94	JSP-4200-01	108"x48" RCBC Inlet/Outlet Structures	EA	2	$	$
95	JSP-4400-02	15" Nyloplast Drain Basin	EA	4	$	$
96	City 4200	10" HDPE (including trenching, bedding, backfill, gasket, and collars)	LF	111	$	$
97	City 4200	12" HDPE (including trenching, bedding, backfill, gasket, and collars)	LF	286	$	$
98	JSP-2303-01	MoDOT Rock Lining for Culvert Outlet	SY	318	$	$
99	JSP-2303-02	Flexamat 10NW UV-T	SY	100	$	$
100	JSP-2303-03	Rip-Rap Splash Pad	SY	970	$	$
101	JSP-2300-02	Southern Trails Monument Signage	LS	1	$	$
102	JSP-2300-03	Remove & Relocate Existing Signs	LS	1	$	$
103	JSP-2300-03	Permanent Signage-Flat Sheet	SF	173	$	$
104	JSP-2300-03	Steel Sign Support (2 Inch Round) (Type P)	LF	86	$	$

ITEM NO.	SPEC. NO.	DESCRIPTION	UNIT	ESTIMATED QUANTITY	UNIT PRICE	TOTAL AMOUNT
105	JSP-2300-03	Steel Sign Support (2-1/2 Inch Round NP-40) (Type P1)	LF	42	$	$
106	JSP-2300-03	Steel Sign Support (2-1/2 Inch Round SCH 40) (Type P2)	LF	66	$	$
107	JSP-2300-03	Sign Post Foundation, Combined (Including Socket & Concrete) (All Types)	EA	19	$	$
108	City 2306	Pavement Marking Removal	LF	1,050	$	$
109	City 2306	4" White Pavement Marking	LF	118	$	$
110	City 2306	4" Yellow Pavement Marking	LF	23,576	$	$
111	City 2306	6" White Pavement Marking	LF	2,473	$	$
112	City 2306	12" White Pavement Marking	LF	120	$	$
113	City 2306	12" Yellow Pavement Marking	LF	208	$	$
114	City 2306	24" White Pavement Marking	LF	274	$	$
115	City 2306	Left/Right Turn Arrow White Pavement Marking Symbol	EA	65	$	$
116	City 2306	"Only" White Pavement Marking Symbol	EA	1	$	$
117	JSP-9000-01	Traffic Signal Modifications	LS	1	$	$
118	JSP-9000-02	3" Schedule 40 HDPE Conduit w/ Pull String (incl. Boring or Trenching) (Fiber Optic)	LF	18,680	$	$
119	JSP-9000-02	Type II Fiber Optic Pull Box	EA	14	$	$
120	JSP-9000-02	1-1c 10 Tracer Wire	LF	9,440	$	$
121	JSP-6700-01	Traffic Control Signs (Total Area)	SF	896	$	$
122	JSP-6700-01	Type III Movable Barricade	EA	66	$	$
123	JSP-6700-01	Channelizer	EA	44	$	$
124	JSP-2300-04	Adjust Sanitary Sewer Manhole	EA	1	$	$
125	City 4100	12" PVC Sewer Main	LF	1,050	$	$
126	City 1700	Trenching (6' to 8') - Sanitary Sewer	LF	431	$	$
127	City 1700	Trenching (8' to 10') - Sanitary Sewer	LF	76	$	$

ITEM NO.	SPEC. NO.	DESCRIPTION	UNIT	ESTIMATED QUANTITY	UNIT PRICE	TOTAL AMOUNT
128	City 1700	Trenching (10' to 12') - Sanitary Sewer	LF	103	$	$
129	City 1700	Trenching (12' to 14') - Sanitary Sewer	LF	466	$	$
130	City 1600	24" Steel Schedule 40 Pipe Casing including Boring and Jacking (Unclassified)	LF	170	$	$
131	City 4100	12" Restrained Joint Ductile Iron Sewer Main (Installed in Casing)	LF	180	$	$
132	City 4300	4' Standard Manhole - Sanitary Sewer	EA	6	$	$
133	City 4300	4' Manhole Extra Depth - Sanitary Sewer	LF	24	$	$
134	City 4100	Sanitary Sewer Testing	LS	1	$	$
135	City 4100	Bypass Pumping	LS	1	$	$
136	JSP-4100-01	Lift Station Decommission	LS	1	$	$
Phase 1 Waterline Relocation (Must be completed by MOAM Pre-Qualified Contractor)						
1001	Appendix E	12" Waterline, Complete, Open-Cut Installation	LF	1,200	$	$
1002	Appendix E	12" Waterline, Complete, HDD Installation	LF	1,175	$	$
1003	Appendix E	8" Waterline, Complete	LF	280	$	$
1004	Appendix E	24" Steel Casing	LF	32	$	$
1005	Appendix E	12"x12" Tapping Sleeve and Valve	EA	1	$	$
1006	Appendix E	12" Gate Valve	EA	8	$	$
1007	Appendix E	8" Gate Valve	EA	4	$	$
1008	Appendix E	Tie to Existing Waterline	EA	8	$	$
1009	Appendix E	Reconnect Existing Service Connections	EA	2	$	$
1010	Appendix E	Relocate Existing Fire Hydrant Assembly, Complete	EA	1	$	$
1011	Appendix E	New Fire Hydrant Assembly, Complete	EA	1	$	$
Phase 2 Waterline Relocation (Must be completed by MOAM Pre-Qualified Contractor)						
2001	Appendix E	12" Waterline, Complete, Open-Cut Installation	LF	1,800	$	$
2002	Appendix E	12" Waterline, Complete, HDD Installation	LF	900	$	$

ITEM NO.	SPEC. NO.	DESCRIPTION	UNIT	ESTIMATED QUANTITY	UNIT PRICE	TOTAL AMOUNT
2003	Appendix E	8" Waterline, Complete	LF	130	$	$
2004	Appendix E	12" Gate Valve	EA	6	$	$
2005	Appendix E	8" Gate Valve	EA	2	$	$
2006	Appendix E	Tie to Existing Waterline	EA	7	$	$
2007	Appendix E	Reconnect Existing Service Connections	EA	5	$	$
2008	Appendix E	Relocate Existing Fire Hydrant Assembly, Complete	EA	1	$	$
2009	Appendix E	New Fire Hydrant Assembly, Complete	EA	1	$	$
TOTAL ESTIMATED COST					$	

The undersigned agrees to enter into a contract within fifteen (15) days from notice of award should this proposal be accepted, and enter into bonds with good and sufficient securities, and to fully complete the work within the time allowances listed below:

Time Allowance:
Overall Project: Calendar Completion Date of **June 16, 2023**
Phase 1.4: **40 Calendar Days** allowed
Calendar day count for Phase 1.4 will commence upon closure of Arbor Road to through traffic and calendar days will cease when Arbor Road is re-opened to traffic via final asphalt. Starting and stopping the count of calendar days within this phase shall not be allowed.
Phase 2.1 **35 Calendar Days** allowed
Calendar day count for Phase 2.1 will commence upon closure of Crane Drive to through traffic and calendar days will cease when Crane Drive is re-opened to traffic via final asphalt. Starting and stopping the count of calendar days within this phase shall not be allowed.

Time allowances listed above are not cumulative. Phase 1.4 and Phase 2.1 must be completed within the overall time allowance of the project, and those time requirements do not affect the overall project completion date listed above.

Liquidated Damages:
Should the undersigned fail to complete the work within the time frames listed above, the following penalties shall be instituted; the amount shall be deducted from the contract price. Failure to comply with more than one of the time allowances above will result in **cumulative liquidated damages.**

Overall Project: **$4,000 per Calendar Day**
Phase 1.4: **$4,000 per Calendar Day**
Phase 2.1: **$4,000 per Calendar Day**

In order to pay all labor employed and material used in connection with this work and to adjust all claims or liens that may arise in consequence of said work, to the satisfaction of the Director of Public Works, above said bonds shall also indemnify and save harmless the said City from all damages or injuries to any person or persons, either in the employ of the contractor, his agents, servants or employees. In the event of the

failure of the undersigned to enter into such contract within ten (10) days of the award, then the deposit or certified check of five percent (5%) of the Total Contract Bid Amount as surety is therefore forfeited to the City of Joplin.

All applicable laws, ordinances, and the rules and regulations of all authorities having jurisdiction over construction of the PROJECT shall apply to the Contract throughout.

Each BIDDER is responsible for inspecting the site and for reading and being thoroughly familiar with the CONTRACT DOCUMENTS. The failure or omission of any BIDDER to do any of the foregoing shall in no way relieve any BIDDER from the any obligation in respect to his BID.

The low BIDDER shall supply the names and addresses of the major material SUPPLIERS AND SUBCONTRACTORS when requested to do so by the OWNER.

Dated _____day of _____, 2021.

Company _____

Address _____

Signature _____

(Print Name) _____

BID BOND PLACEHOLDER

BIDDER QUALIFICATIONS & CERTIFICATIONS

Firm Name: _____

(Company Name)

_____

(Address) (City, State, Zip)

_____

(Phone Number) (Fax Number) (E-mail)

Date: _____

Construction

- □ General Contracting
- □ HVAC
- □ Asbestos Abatement
- □ Electrical
- □ Demolition
- □ Other: _____
- □ Plumbing
- □ Earthmoving

For Corporations

Federal ID Number: _____

Name of State(s) in which incorporated: _____

Date(s) of incorporation: _____

If not incorporated in

1. Attach Certificate of Authority to do Business in Missouri Certificate
2. Number: _____ Date: _____

_____ _____

(President's Name) (Vice-President's Name)

_____ _____

(Secretary's Name) (Treasurer's Name)

For Partnerships Only: Date of Organization: _____

Type of Partnership: □ General □ Limited □ Association

Names and Addresses of all partners: (use additional sheet if necessary)

1. _____

(Name) (Address) (City, State, Zip Code)

2. _____

(Name) (Address) (City, State, Zip Code)

General

Federal ID Number: _____ or SSN: _____

Percent of work done by Contractor: _____ Number of Permanent Employees: _____

Number of years in business: _____

Geographical limits of operation: _____

If you have done business under a different name, please give name and location: _____

_____

Has firm ever failed to complete a project or defaulted on a contract? If so, state where and why:

_____

_____

Date: Dated this _____ day of _____ , ____.

Signatures:

☐ Individual ☐ Partnership ☐ Joint Venture ☐ Corporation

Business Name: _____

Address: _____

_____

Telephone: _____ Fax Number: _____

Federal ID Number: _____ or Social Security Number: _____

DUNS Number: _____

Incorporated under the laws of the State of: _____

(If a corporation is organized in a state other than Missouri, attach Certificate of Authority to do business in the State of Missouri.)

(Bidder's Signature) (Corporate Secretary's Signature and Seal)

(Typed or Printed Name of Signor)

(Seal)

(Partner/Joint Venture Signature)

(Typed or Printed Name of Signor)

Contractor Past Performance Questionnaire

Legal Name of the Corporation, Firm or Individual Contractor

P.O Box_____ City & State_____ Zip Code_____

Street Address _____

(If different from P.O. Box:) City & State _____ Zip Code_____

Telephone No. _____ Fax No. _____

E-Mail Address_____ Contact person: _____

Has this firm or organization (or in the case of a partnership or joint venture, has any contractor which is included within this firm or organization) performed any work as a contractor or subcontractor for the City of Joplin, in the last five (5) years?_Yes _____No

If yes, give complete details, descriptions and dates on additional sheets as needed.

This firm or organization has_____years experience as a general contractor and/or_____years as a subcontractor in the type of work designated in this RFP.

Has your firm or organization ever failed to complete any work awarded to you?____Yes_____No

If so, where and why? (Attach additional sheets as needed.) _____

Has your firm or organization ever failed to complete any work in a timely manner?____Yes___No
If so, where and why? (Attach additional sheets as needed.) _____

Does your firm or organization currently possess a City of Joplin contractor license?_____Yes_____No

This organization has completed the following similar projects for the type(s) of work designated in this RFP within the last five years. (Attach additional sheets as needed.)

Contract Amount	Type of Work	Key Personnel	When Completed	Location: City and State	Project Owner's Name and Address

SUBCONTRACTOR DISCLOSURE FORM

CONTRACTOR:_____

PROJECT:_____

DATE: _____

SUBCONTRACTOR	CATEGORY OF WORK	DOLLAR VALUE
Name:		
Contact Name:		
Address:		
Phone Number:		
Fax Number:		
Email:		
Tax ID Number:	DUNS Number:	

Name:		
Contact Name:		
Address:		
Phone Number:		
Fax Number:		
Email:		
Tax ID Number:	DUNS Number:	

Name:		
Contact Name:		
Address:		
Phone Number:		
Fax Number:		
Email:		
Tax ID Number:	DUNS Number:	

Name:		
Contact Name:		
Address:		
Phone Number:		
Fax Number:		
Email:		
Tax ID Number:	DUNS Number:	

Name:		
Contact Name:		
Address:		
Phone Number:		
Fax Number:		
Email:		
Tax ID Number:	DUNS Number:	

Non-Collusion Affidavit

The undersigned affirm that they are duly authorized to execute this contract, that this company, firm, partnership, or individual has not prepared this proposal in collusion with any other proposer, and that the contents of this proposal as to prices, terms or conditions of said proposal have not been communicated by the undersigned nor by any employee or agent to any other person engaged in this type of business prior to the official opening of this proposal.

Vendor_____

Address_____

Phone_____

Proposer (Signature)_____

Proposer (Printed Name)_____

Position with Company_____

Signature of Company Official Authorizing this Proposal_____

Company Official (Printed Name)_____

Official Position_____

SECTION C:

DOCUMENTS NEEDED AT CONTRACT EXECUTION

***The documents provided in this section are required IN ADDITION to all contract requirements. Exceptions will be dealt with on a case-by-case basis.*

AGREEMENT
BETWEEN
CITY OF JOPLIN AND

CITY		CONTRACTOR	
CITY OF JOPLIN **602 S. MAIN STREET** **JOPLIN, MO 64801**		Name: Address:	
Attention:		Attention:	
Department:		Phone:	Fax:
Phone:	Fax:		

THIS AGREEMENT, made and entered into this ____ day of _____, 20____, by the parties identified above.

WITNESSETH: That whereas, the Contractor has become the lowest responsible bidder for furnishing the supervision, labor, tools, equipment, materials and supplies and for constructing the following City improvements:

32nd Street Widening
Central City Rd. to Schifferdecker Ave.
Jasper and Newton County, Missouri

The City and Contractor agree to the following:

1. Manner and Time for Completion. The Contractor will furnish all supervision, labor, tools, equipment, materials and supplies necessary to perform, and to perform said work at Contractor's own expense in accordance with the contract documents and any applicable City ordinances and state and federal laws within the time frames stated in the Proposal. Notice to Proceed shall be issued by the Director of Public Works within 30 days after the date of this contract.

2. Prevailing Wages. All labor utilized in the construction of the aforementioned improvements shall be paid a wage of no less than the "prevailing hourly rate of wages" for work of a similar character in this locality, as established and amended at any time by the Department of Labor and Industrial Relations of the State of Missouri. At any time the contractor is found to not have paid prevailing wages, the contractor shall forfeit as a penalty to the city one hundred dollars for each underpaid worker employed, for each calendar day, or portion thereof such worker is paid less than the said stipulated rates for any work done under this contract.

3. Insurance Requirements. Without limiting any of the other obligations or liabilities of the Contractor, the Contractor shall secure and maintain at its own cost and expense, throughout the duration of this Contract and until the work is completed and accepted by the City of Joplin, insurance of such types and in such amounts as may be necessary to protect it and the interests of the

City of Joplin against all hazards or risks of loss as hereunder specified or which may arise out of the performance of the Contract Documents. The form and limits of such insurance, together with the underwriter thereof in each case, are subject to approval by the City of Joplin. Regardless of such approval, it shall be the responsibility of the contractor to maintain adequate insurance coverage at all times during the term of the Contract. Failure of the Contractor to maintain coverage shall not relieve it of any contractual responsibility or obligation or liability in general or under the Contract Documents.

The certificates of insurance, including evidence of the required endorsements hereunder or the policies, shall be filed with the City within ten (10) days after the date of the receipt of Notice of Award of the Contract to the Contractor and prior to the start of work. All insurance policies shall require that the insurance company in question provide thirty (30) days written notice prior to modification or cancellation of such insurance. Such notices shall be mailed, certified mail, return receipt requested, to:

City of Joplin - Public Works, 602 S. Main Street, Joplin, MO 64801

Such policies shall name the City as an additional insured, with limits of liability not less than the sovereign immunity limits for Missouri public entities calculated by the Missouri Department of Insurance as of January 1 each calendar year and published annually in the Missouri Register pursuant to Section 537.610, RSMo. (See, http://insurance.mo.gov/industry/sovimmunity.php)

As of January 1, 2021, the minimum coverage for the insurance referred to herein shall be as set out below:

a. Workers' Compensation…. Statutory coverage per RSMo 287.010 et seq

Employer's Liability……. $1,000,000.00

b. Commercial General Liability Insurance, including coverage for Premises, Operations, Products and Completed Operations, Contractual Liability, Broad Form Property Damage, Independent Contractors, Explosion, Collapse, and Underground Property Damage and endorsed for blasting if blasting required. Such coverage shall apply to bodily injury and property damage on an "Occurrence Form Basis" with limits of at least Two Million Nine Hundred Forty Thousand Eight Hundred Sixty-eight and no/100 Dollars ($2,940,868.00) for all claims arising out of a single accident or occurrence and at least Four Hundred Forty-one Thousand One Hundred Thirty and no/100 Dollars ($441,130.00) with respect to injuries and/or death of any one person in a single occurrence and an amount not less than at least $1,000,000 for all claims to property arising out of a single occurrence and at least $100,000 to any one owner with respect to damages to property. Contractor agrees that the proceeds of such insurance policy shall first be used to pay any award, damages, costs, and/or attorneys' fees incurred by or assessed against City, its employees, officers and agents, before payment of any award, damages, costs or attorneys' fees of Contractor, its employees, officers or agents. Contractor agrees to cause its insurer to name City as an additional insured on such insurance policy, including the City as an additional insured for coverage under its products-completed operations hazard, and said policy shall be primary and noncontributory.

c. Automobile Liability Insurance covering bodily injury and property damage for owned, non-owned and hired vehicles, with limits of at least Two Million Nine Hundred Forty Thousand Eight Hundred Sixty-eight and no/100 Dollars ($2,940,868.00) for all claims arising out of a single accident or occurrence and at least Four Hundred Forty-one Thousand One Hundred Thirty and no/100 Dollars ($441,130.00) with respect to injuries and/or death of any one person in a single accident or occurrence.

d. Owner's and Contractor's Protective Liability Insurance to protect the City, its agents, servants and employees from claims which may arise from the performance of this Contract, with limits of at least Two Million Nine Hundred Forty Thousand Eight Hundred Sixty-eight and no/100 Dollars ($2,940,868.00) for all claims arising out of a single accident or occurrence and at least Four Hundred Forty-one Thousand One Hundred Thirty and no/100 Dollars ($441,130.00) with respect to injuries and/or death of any one person in a single accident or occurrence.

The Owner's and Contractor's Protective Liability Insurance must:

(1) Be a separate policy with the named insured being: The City of Joplin, and

(2) Contain an endorsement that disclaims coverage for any claim barred by the doctrines of sovereign immunity or official immunity, except attorney's fees and other litigation costs incurred in defending a claim. Nothing contained in this policy (or this endorsement thereto) shall constitute any waiver of whatever kind of these defenses or sovereign immunity or official immunity for any monetary amount whatsoever.

e. Builders Risk Insurance for contracts involving unoccupied structures. The Contractor shall secure All Risk Builder's Risk Insurance. Unless specifically authorized by the City, the amount of such insurance shall not be less than the total contract price.

f. Subcontracts. In case any or all of this work is sublet, the Contractor shall require the subcontractor to procure and maintain all insurance required in subparagraphs (a), (b) and (c) hereof and in like amounts. Contractor shall require any and all subcontractors with whom it enters into a contract to perform work on this project to protect the City of Joplin through insurance against applicable hazards or risks and shall, upon request of the City, provide evidence of such insurance.

g. Notice. The Contractor and/or subcontractor shall furnish the City prior to beginning the work, the policy as specified in subparagraph (d), and satisfactory proof of carriage of all the insurance required by this contract, with the provision that policies shall not be canceled, modified or non-renewed without thirty (30) days written notice to the City of Joplin.

h. Legislative or Judicial Changes. In the event the scope or extent of the City's tort liability as a governmental entity as described in Section 537.600 through 537.650 RSMo is broadened or increased during the term of this agreement by legislative or judicial action, the City may require Contractor, upon 10 days written notice, to execute a contract addendum whereby the Contractor agrees to provide, at a price not exceeding Contractor's actual increased premium cost, additional liability insurance coverage as the City may require to protect the City from increased tort liability exposure as the result of such legislative or judicial action. Any such additional insurance coverage shall be evidenced by an appropriate certificate of insurance and shall take effect within the time set forth in the addendum.

4. Performance, Labor, and Materials Payment Bond: The Contractor shall furnish a Performance Bond and a Labor and Materials Payment Bond with surety approved by the City and on the forms approved by the City, each bond shall be in the amount of $_____ (full amount of contract) conditioned upon the full and faithful performance of all major terms and conditions of this contract and payment of all labor and material suppliers. It is further mutually agreed between the parties hereto that if at any time after the execution of this agreement and the surety bond(s) hereto attached for its faithful performance and payment of labor and material suppliers, the City shall deem the surety or sureties upon such bond(s) to be unsatisfactory, or if, for any reason, such bond(s) ceases to be adequate to cover the performance of the work, the Contractor shall, at its expense, within five (5) days after the receipt of notice from the City to do so, furnish an additional bond or bonds, in such form and amount, and with such surety or sureties as shall be satisfactory to the City. In such event no further payment to the Contractor shall be deemed to be due under this contract until such new or additional security for the faithful performance of the work and the payment of labor and material suppliers shall be furnished in a manner and form satisfactory to the City. The corporate surety on any performance or payment bond must be licensed by the State of Missouri and if the required bond exceeds $25,000.00 must be listed in United States Treasury Circular 570.

5. Certification Regarding Disbarment, Eligibility, Indictments, Convictions or Civil Judgements for all Federal Aid Projects:
By signing and submitting the bid, the president or authorized official of the bidder, under penalty of perjury under the laws of the USA, shall certify that, except as noted in the exceptions, the company or any person associated therewith in the capacity of owner, partner, director, officer, principal investor, project director, manager, auditor or any position involving the administration of federal funds:
(Reference can be made to "The System for Award Management" website as a helpful resource).

a. Is not currently under suspension, debarment, voluntary exclusion or determination of ineligibility by any federal agency.

b. Has not been suspended, debarred, voluntarily excluded or determined ineligible by any federal agency within the past three years.

c. Does not have a proposed debarment or suspension pending.

d. Has not been indicted, convicted or had a civil judgment rendered against any of the listed parties by a court of competent jurisdiction in any matter involving fraud or official misconduct within the past three years.

5.1 If there are any exceptions, the bidder shall submit the exceptions on company letterhead, signed by the bidder and inserted inside the bid submitted. Exceptions will not necessarily result in denial of award, but will be considered in determining bidder responsibility. For any exception noted, the bidder shall indicate to whom it applies, the initiating agency, and dates of action. Providing false information may result in criminal prosecution or administrative sanctions.

5.2 By signing the contract, the contractor shall further certify that all related subcontracts of $25,000 shall comply with this requirement. This includes all subcontractors, material suppliers and vendors.

6. Contractor's responsibility for subcontractors. The Contractor shall be as fully responsible to the City for the acts and omissions of its subcontractors, and of persons either directly or indirectly employed by them, as Contractor is for the acts and omissions of persons it directly employs. Contractor shall cause appropriate provisions to be inserted in all subcontracts relating to this work, to bind all subcontractors to Contractor by all the terms herein set forth, and insofar as applicable to the work of subcontractors and to give Contractor the same power regarding termination of any subcontract as the City may exercise over Contractor under any provisions of this contract. Nothing contained in this contract shall create any contractual relation between the subcontractor and the City or between any subcontractors.

7. General Independent Contractor Clause. This agreement does not create an employee/employer relationship between the parties. It is the parties' intention that the Contractor will be an independent contractor and not the City's employee for all purposes, including, but not limited to, the application of the Fair Labor Standards Act minimum wage and overtime payments, Federal Insurance Contribution Act, the Social Security Act, the Federal Unemployment Tax Act, the provisions of the Internal Revenue Code, Missouri Revenue and Taxation laws, Missouri Workers' Compensation and Unemployment Insurance laws. The Contractor will retain sole and absolute discretion in the judgment of the manner and means of carrying out the Contractor's activities and responsibilities hereunder. The Contractor agrees that it is a separate and independent enterprise from the public employer, that it has a full opportunity to find other business, that it has made its own investment in its business, and that it will utilize a high level of skill necessary to perform the work. This agreement shall not be construed as creating any joint employment relationship between the Contractor and the City, and the City will not be liable for any obligation incurred by the Contractor, including but not limited to unpaid minimum wages and/or overtime premiums.

8. Liquidated Damages. Time of completion of work by the Contractor is of the essence. Should Contractor, or in the case of default, the surety, fail to complete the work within the time specified in the contract, or within such extra time as may be allowed in accordance with City of Joplin Standard Specifications, Division 0000, General Requirements and Provisions, Section 0400.19, (http://mo-joplin.civicplus.com/DocumentCenter/View/3460) Contractor (or surety) shall be liable to the City in the amount of $4,000 per day for each and every calendar day that the contract remains uncompleted after the time allowed for completion, as liquidated damages, and not as a penalty, it being stipulated that actual damages to the City and the public arising from Contractor's failure to timely complete the work would be difficult, if not impossible, to ascertain. The amount assessed as liquidated damages may be withheld from any moneys otherwise due to Contractor from the City.

9. Termination. The City reserves the right to terminate this contract by giving at least five (5) days prior written notice to the Contractor, without prejudice to any other rights or remedies of the City should the Contractor be adjudged a bankrupt, or if Contractor should make a general assignment for the benefit of its creditors, or if a receiver should be appointed for Contractor or for any of its property, or if Contractor should persistently or repeatedly refuse or fail to supply enough properly skilled workmen or proper material, or if Contractor should refuse or fail to make prompt payment to any person supplying labor or materials for the work under the contract, or persistently disregard instructions of the City or fail to observe or perform any provisions of the contract.

10. City's Right to Proceed. In the event this contract is terminated pursuant to Paragraph 8, then the City may take over the work and prosecute the same to completion, by contract or otherwise, and Contractor and its sureties shall be liable to the City for any costs over the amount of this contract thereby occasioned by the City. In any such case, the City may take possession of, and utilize in completing the work, such materials, appliances and structures as may be on the work site and are necessary for completion of the work. The foregoing provisions are in addition to, and not in limitation of, the rights of the City under any other provisions of the contract, city ordinances, and state and federal laws.

11. Termination for Convenience of City. The City shall have the right at any time by written notice to Contractor to terminate and cancel this contract, without cause, for the convenience of the City, and Contractor shall immediately stop work. In such event City shall not be liable to Contractor except for payment for actual work performed prior to such notice in an amount proportionate to the completed contract price and for the actual costs of preparations made by Contractor for the performance of the cancelled portions of the contract, including a reasonable allowance of profit applicable to the actual work performed and such preparations. Anticipatory profits and consequential damages shall not be recoverable by Contractor.

12. Guards and Lights. The Contractor agrees that during the performance of said work, adequate barricades, guards and warning signs, lights or devices consistent with the requirements contained in the Manual on Uniform Traffic Control Devices shall be provided by Contractor during construction.

13. Liability and Indemnity.

a. In no event shall the City be liable to the Contractor for special, indirect, or consequential damages, except those caused by the City's gross negligence or willful or wanton misconduct arising out of or in any way connected with a breach of this contract. The maximum liability of the City shall be limited to the amount of money to be paid or received by the City under this contract.

b. The Contractor shall defend, indemnify and save harmless the City, its elected or appointed officials, agents and employees from and against any and all liability, suits, damages, costs (including attorney fees), losses, outlays and expenses from claims in any manner caused by, or allegedly caused by, or arising out of, or connected with, this contract, or the work or any subcontract thereunder (the Contractor hereby assuming full responsibility for relations with subcontractors), including, but not limited to, claims for personal injuries, death, property damage, or for damages from the award of this contract to Contractor, notwithstanding any possible negligence, whether sole or concurrent, on the part of the City, its officials, agents and employees.

c. The Contractor shall indemnify and hold the City harmless from all wages or overtime compensation due any employees in rendering services pursuant to this agreement or any subcontract, including payment of reasonable attorneys' fees and costs in the defense of any claim made under the Fair Labor Standards Act, the Missouri Prevailing Wage Law or any other federal or state law.

d. The indemnification obligations of Contractor hereunder shall not be limited by any limitations as to the amount or type of damages, compensation or benefits payable by or for the Contractor, under any federal or state law, to any person asserting the claim against City, its elected or appointed officials, agents and employees, for which indemnification is sought.

e. The indemnification obligations herein shall not negate, abridge or reduce in any way any additional indemnification rights of the City, its elected or appointed officials, agents and employees, which are otherwise available under statute, or in law or equity.

f. Contractor affirms that it has had the opportunity to recover the costs of the liability insurance required in this agreement in its contract price. Contractor's obligation under this agreement to defend, indemnify, and hold harmless any person from that person's own negligence or wrongdoing is limited to the coverage and limits of the applicable insurance required of the Contractor under this agreement.

g. The Contractor shall indemnify and hold the City harmless for any penalties, fines, fees or costs, including costs of defense, which are charged or assessed by any Federal, state or local agency including, but not limited to, Environmental Protection Agency or Department of Natural Resources.

14. Payment for Labor and Materials. The Contractor agrees and binds itself to pay for all labor done, and for all the materials used in the construction of the work to be completed pursuant to this contract.

15. Payment. The City will pay the Contractor in accordance with the rate set forth in the contract documents on file in the Public Works Department and by this reference made a part hereof, which shall constitute full and complete compensation for the Contractor's work provided hereunder. Such compensation will be paid in progress payments (less five (5) percent retainage), as established by the City, subject to receipt of a requisition for payment and a statement of work provided by the Contractor and agreement by both the City and the Contractor that the Contractor has fully performed the work to be paid for in such progress payments in conformance with the contract. If the City or the architect or engineer determines that a higher rate of retainage is required to ensure performance of the contract, the City may withhold up to ten (10) percent retainage until the work is fully completed and accepted by the City.

16. Contract Documents. The contract documents shall consist of the following:

a. This Contract
b. All Change Orders
c. Bid Plans and Specifications
d. City of Joplin Standard Specifications (Latest Revised Edition)
e. Special Conditions & Provisions
f. Proposal
g. Statement of Bidder's Qualifications
h. Acknowledgment
i. Performance Bond
h. Payment and Material Bond
k. Instructions to Bidders
l. Non-collusion Affidavit

m. Notice to Proceed

Notice to Contractors: This contract, together with the other documents enumerated in this paragraph, forms the contract between the parties. These documents are as fully a part of the contract as if attached hereto or repeated herein. The Contractor agrees to perform all of the work described in the contract documents and to comply with the terms and conditions defined therein for a total sum of ORIGINAL CONTRACT AMOUNT WRITTEN OUT ($) dollars, said amount being subject to any approved addenda or change order.

17. Subsurface Conditions. Contractor agrees that information contained in the published reports and public actions of the Missouri Division of Geology and Land Survey shall be conclusive and binding upon the Contractor as to what subsurface conditions at the job site are reasonably anticipated or reasonably foreseeable. Contractor acknowledges and agrees that it shall not be entitled to any adjustment in the Contract Sum or Contract Times for any concealed condition of any nature, including but not limited to unknown physical conditions of an unusual nature which differ materially from those ordinarily found to exist and generally recognized as inherent in construction activities of the character provided for in the Contract Documents, in addition to the information contained in the published reports and public actions of the Missouri Division of Geology and Land Survey. Contractor recognizes that it has assumed the risks of concealed conditions and is being compensated for assuming these risks.

18. Conflict of Interest. In accepting this contract, Contractor certifies that no member or officer of its firm or corporation is an officer or employee of the City of Joplin, Missouri, or any of its boards or agencies, and further that no officer or employee of the City has any financial interest, direct or indirect, in this contract. All applicable federal regulations and provisions of R.S.Mo. Section 105.450 et seq. shall not be violated.

19. Assignment. The Contractor shall not assign any interest in this contract, and shall not transfer any interest in the same (whether by assignment or novation), without prior written consent of the City thereto, provided, however, that claims for money due or to become due to the Contractor from the City under this Contract may be assigned to a bank, trust company, or other financial institution without such approval. Notice of such assignment or transfer shall be furnished in writing promptly to the City and the bond surety. Any such assignment is expressly subject to all rights and remedies of the City under this agreement, including the right to change or delete activities from the Contract or to terminate the same as provided herein, and no such assignment shall require the City to give any notice to any such assignee of any actions which the City may take under this agreement.

20. Nondiscrimination. The Contractor agrees in the performance of this contract not to discriminate on the ground or because of race, creed, color, national origin or ancestry, sex, religion, handicap, age, status as a protected veteran or status as a qualified individual with a disability, or political opinion or affiliation, against any employee of Contractor or applicant for employment and shall include a similar provision in all subcontracts let or awarded hereunder. The parties hereby incorporate the requirements of 41 C.F.R. §§ 60-1.4(a)(7), 29 C.F.R. Part 471, Appendix A to Subpart A, 41 C.F.R. § 60-300.5(a)ii and 41 C.F.R. § 60-741.5(a), if applicable.

a. This contractor and subcontractor shall abide by the requirements of 41 C.F.R. § 60-300.5(a). This regulation prohibits discriminations against qualified protected veterans, and requires affirmative action by covered prime contractors and subcontractors to employ and advance in employment qualified protected veterans.

b. This contractor and subcontractor shall abide by the requirements of 41 C.F.R. § 60-741.5(a). This regulation prohibits discrimination against qualified individuals on the basis of disability, and requires affirmative action by covered prime contractors and subcontractors to employ and advance in employment qualified individuals with disabilities.

21. Nonresident/Foreign Contractors. The Contractor shall procure and maintain during the life of this contract:

a. If the Contractor is a foreign corporation, a certificate of authority to transact business in the State of Missouri from the Secretary of State, unless exempt pursuant to the provisions of Section 351.570 R.S.Mo.

b. A certificate from the Missouri Director of Revenue evidencing compliance with the transient employer financial assurance law, unless exempt pursuant to the provisions of Section 285.230 RSMo.

22. Notices. All notices required or permitted hereinunder and required to be in writing may be given by FAX or by first class mail addressed to City and Contractor at the addresses shown above. The date of delivery of any notice given by mail shall be the date falling on the second full day after the day of its mailing. The date of delivery of notice by FAX transmission shall be deemed to be the date transmission occurs, except where the transmission is not completed by 5:00 p.m. on a regular business day at the terminal of the receiving party, in which case the date of delivery shall be deemed to fall on the next regular business day for the

receiving party.

23. Records and Audits. The Contractor shall maintain accounts and records, including personnel, property, and financial records, adequate to identify and account for all costs pertaining to the Contract and such other records as may be deemed necessary by the City to assure proper accounting for all project funds. These records will be made available for audit purposes to the City or any authorized representative, and will be retained for three years after the expiration of this Contract.

24. Authorized Employees. Contractor acknowledges that Section285.530, RSMo, prohibits any business entity or employer from knowingly employing, hiring for employment, or continuing to employ an unauthorized alien to perform work within the State of Missouri. Contractor therefore covenants that is not knowingly in violation of subsection 1 or Section 285.530, RSMo, and that it will not knowingly employ, hire for employment, or continue to employ any unauthorized aliens to perform work on the Project, and that its employees are lawfully to work in the United States.

25. Interest of Contractor and Employees. The Contractor covenants that he/she presently has no interest and shall not acquire interest, direct or indirect, in the study area or any parcels therein or any other interest which would conflict in any manner or degree with the performance of his services hereunder. The Contractor further covenants that in the performance of this Contract, no person having any such interest shall be employed.

26. Interest of Members of a City. No member of the governing body of the City and no other officer, employee, or agent of the City who exercises any functions or responsibilities in connection with the planning and carrying out of the program, shall have any personal financial interest, direct or indirect, in this Contract, and the Contractor shall take appropriate steps to assure compliance.

27. Interest of Other Local Public Officials. No member of the governing body of the locality and no other public official of such locality, who exercises any functions or responsibilities in connection with the planning and carrying out of the program, shall have any personal financial interest, direct or indirect, in this Contract, and the Contractor shall take appropriate steps to assure compliance.

28. Affidavit for Contracts Over $5,000.00. That pursuant to Missouri Revised Statute Sections 285.525 through 285.550, if this contract exceeds the amount of $5,000.00 and Contractor is associated with a business entity, Contractor shall provide an acceptable notarized affidavit stating that the associated business entity is enrolled in and participates in a federal work authorization program with respect to the employees working in connection with the contracted services, and that said business entity does not knowingly employ any person who is an unauthorized alien in connection with the contracted services. Additionally, Contractor must provide documentation for said business entity evidencing current enrollment in a federal work authorization program.

29. City Benefits. The Contractor shall not be entitled to any of the benefits established for the employees of the City nor be covered by the Worker's Compensation Program of the City.

30. Occupational License: The Contractor shall obtain and maintain an occupational license with the City of Joplin, Missouri, if required by city code and any required state or federal license. The cost for this occupational license shall be borne by the Contractor. No contract will be executed by the City until this occupational license has been obtained and that the Contractor is current on any City taxes is verified.

31. Safety Training. Pursuant to Missouri Revised Statute Section 292.675, Contractors and subcontractors who sign a contract to work on public works projects must provide a 10-hour OSHA construction safety program, or similar program approved by the Department of Labor and Industrial Relations, to be completed by their on-site employees within sixty (60) days of beginning work on the construction project. Contractors and subcontractors in violation of this provision will forfeit to the public body $2,500 plus $100 a day for each employee who is employed without training. Public bodies and contractors may withhold/assess these penalties from the payment due to those contractors and subcontractors if found to be in non-compliance.

32. Compliance with Laws. Contractor agrees to comply with all applicable federal, state and local laws or rules and regulations applicable to the provision of services and products hereunder. Contractor affirmatively states that payment of all local, state, and federal taxes and assessments owed by Contractor is current.

33. Entire Agreement. This agreement contains the entire agreement of the parties. No modification, amendment, or waiver of any of the provisions of this agreement shall be effective unless in writing specifically referring hereto, and signed by both parties.

34. Remedies. Except as may be otherwise found in the contract documents, all claims, disputes, counter-claims, and other matters in question between the Owner and Contractor arising out of or related to this agreement or the breech thereof, will be decided by arbitration if the parties hereto mutually agree, or in a court of competent jurisdiction within the state in which the Owner is located.

35. Jurisdiction. This agreement and every question arising hereunder shall be construed or determined according to the laws of the State of Missouri. Should any part of this agreement be adjudicated, venue shall be proper only in the Circuit Court of Jasper County, Missouri.

IN WITNESS WHEREOF, the parties hereto have set their hands and seals on the day and year herein stated.

CERTIFICATE OF DIRECTOR OF FINANCE

I certify that the expenditure contemplated by this document is within the purpose of the appropriation to which it is to be charged and that there is an unencumbered balance of appropriated and available funds to pay therefor.

_____

Leslie Haase, Director of Finance

APPROVED AS TO FORM

_____

Peter Edwards, City Attorney

CONTRACTOR:

By: _____

Printed Name: _____

Title: _____

CITY OF JOPLIN, MISSOURI

By: _____

David Hertzberg, Public Works Director

CONTRACTOR'S BOND NO.
FOR CITY CONTRACTS

PERFORMANCE BOND

KNOW ALL PERSONS BY THESE PRESENTS: That

Contractor

a Corporation, hereinafter called Principal, and

_____
(Name of Surety)

_____
(Address of Surety)

hereinafter called Surety, are held and firmly bound unto

THE CITY OF JOPLIN, MISSOURI
602 S. MAIN STREET, JOPLIN, MO 64801

hereinafter called OWNER, in the total aggregate penal sum of xxxxxxxxxxxxxxxxxxxxxxxxxxxxx AND xx/100 DOLLARS ($xxxxxxxX.00) lawful money of the United States, for the payment of which sum well and truly to be made, we bind ourselves, our heirs, executors, administrators, successors, and assigns, jointly and severally, firmly by these presents.

THE CONDITION OF THIS OBLIGATION is such that whereas, the Principal entered into a certain contract with the OWNER, dated the _____ day of _____, 20____, a copy of which is hereto attached and made a part hereof for the construction of:

PROJECT

NOW, THEREFORE, if the Principal shall well, truly and faithfully perform its duties, all the undertakings, covenants, terms, conditions, and agreements of said contract during the original term thereof, or any extensions thereof, which may be granted by the OWNER, with or with-out notice to the SURETY and during the one year guaranty period and if the PRINCIPAL shall satisfy all claims and demands incurred under such contract, and shall fully indemnify and save harmless the OWNER from all costs and damages which it may suffer by reason of failure to do so, and shall reimburse and repay the OWNER all outlay and expense which the OWNER may incur in making good any default, then this obligation shall be void, otherwise to remain in full force and effect.

PROVIDED, FURTHER, that the said SURETY, for value received hereby stipulates and agrees that no change, extension of time, alteration or addition to the terms of the contract or to WORK to be performed thereunder or the SPECIFICATIONS accompanying same shall in any way affect its obligation on this BOND, and it does hereby waive notice of any such change, extension of time, alteration or addition to the terms of the contract or to the WORK or to the SPECIFICATIONS.

PROVIDED, FURTHER, that it is expressly agreed that the BOND shall be deemed amended automatically and immediately, without formal and separate amendments hereto, upon amendment of the Contract not increasing the contract price more than 20 percent, so as to bind the PRINCIPAL and the SURETY to the full and faithful performance of the CONTRACT as so amended. The term "Amendment", wherever used in this BOND, and whether referring to this BOND, the Contract or the Loan Documents shall include any alteration, addition, extension, or modification of any character whatsoever.

IN WITNESS, whereof, this the _____ day of _____, 20____.

ATTEST: (SEAL)

_____ _____
Secretary Principal

Approved as to form this _____ day

of _____, 20____. By _____

_____ By _____
City Attorney

ATTEST: (SEAL)

_____ _____
Secretary Surety

Approved this _____ day of

_____, 20_____. By _____

_____ By _____
Director of Finance (Title)

NOTE: Date of BOND must not be prior to date of Contract.

If CONTRACTOR is partnership, all partners should execute BOND.

IMPORTANT: Surety companies executing BONDS must appear on the Treasury Department's most current list (Circular 570 as amended) and be authorized to transact business in the state where the Project is located.

CONTRACTOR'S BOND NO.
FOR CITY CONTRACTS

PAYMENT BOND

KNOW ALL MEN BY THESE PRESENTS: That

CONTRACTOR

a Corporation, hereinafter called Principal, and

_____

(Name of Surety)

hereinafter called Surety, are held and firmly bound unto

THE CITY OF JOPLIN, MISSOURI
602 S. MAIN STREET, JOPLIN, MO 64801

hereinafter called OWNER, and unto all persons, firms, and corporations who or which may furnish labor, or who furnish materials to perform as described under the contract and to their successors and assigns in the total aggregate penal sum of xxxxxxxxxxxxxxxxxxxxxxxxxxxxxxxx and xx/100 DOLLARS ($xxxxxxxxxx.00) in lawful money of the United States, for the payment of which sum well and truly to be made, we bind ourselves, our heirs, executors, administrators, successors, and assigns, jointly and severally, firmly by these presents.

THE CONDITION OF THIS OBLIGATION is such that whereas, the principal entered into a certain contract with the OWNER, dated the _____ day of _____, 20___, a copy of which is hereto attached and made a part hereof for the construction of:

PROJECT

NOW, THEREFORE, if the PRINCIPAL shall promptly make payment to all persons, firms, subcontractors, and corporations furnishing materials for or performing labor in the prosecution of the WORK provided for in such contract, and any authorized extensions or modification thereof, including all amounts due for materials, lubricants, oil, gasoline, coal or coke, repairs on machinery, equipment and tools, consumed or used in connection with the construction of such WORK, all insurance premiums on said work, and for all labor cost incurred in such WORK including the stipulation in said contract requiring the payment of not less than the prevailing hourly rate of wages as found by the Department of Labor and Industrial Relations of the State of Missouri or by final judicial determination of the Courts of the State of Missouri, including that by a SUBCONTRACTOR, and to any mechanic or material man lien holder whether it acquires its lien by operation of State or Federal law; then this obligation shall be void, otherwise to remain in full force and effect.

PROVIDED, that beneficiaries or claimants hereunder shall be limited to the SUBCONTRACTORS, any persons, firms, and corporations having a direct contract with the PRINCIPAL or its SUBCONTRACTORS.

PROVIDED, FURTHER, that the said SURETY for value received hereby stipulates and agrees that no change, extension of time, alteration or addition to the terms of the contract or to the WORK to be performed thereunder or the SPECIFICATIONS accompanying the same shall in any way affect its obligation on this BOND, and it does hereby waive notice of any such change, extension of time, alteration or addition to the terms of this contract or to the WORK or to the SPECIFICATIONS.

PROVIDED, FURTHER, that no suit or action shall be commended hereunder by any claimant: (a) Unless claimant, other than one having a direct contract with the PRINCIPAL, shall have given written notice to any two of the following: The PRINCIPAL, the OWNER, or the SURETY above named within ninety (90) days after such claimant did or performed the last of the work or labor, or furnished the last of the materials for which said claim is made, stating with substantial accuracy the amount claimed and the name of the party to whom the materials were furnished, or for whom the work or labor was done or performed. Such notice shall be served by mailing the same by registered mail or certified mail, postage prepaid, in an envelope addressed to the PRINCIPAL, OWNER, or SURETY, at any place where an office is regularly maintained for the transaction of business, or served in any manner in which legal process may be served in the state in which the aforesaid project is located, save that such service need to be made by a public officer. (b) After the expiration of one (1) year following the date of which PRINCIPAL ceased work on said CONTRACT, it being understood, however, that if any limitation embodied in the BOND is prohibited by any law controlling the construction thereof, such limitation shall be deemed to be amended so as to be equal to the minimum period of limitation permitted by such law.

PROVIDED, FURTHER, that it is expressly agreed that this BOND shall be deemed amended automatically and immediately, without formal and separate amendments hereto, upon amendment to the Contract not increasing the contract price more than 20 percent, so as to bind the PRINCIPAL and the SURETY to the full and faithful performance of the Contract as so amended. The term "Amendment", wherever used in this BOND and whether referring to this BOND, the contract or the loan documents shall include any alteration, addition, extension or modification of any character whatsoever.

PROVIDED, FURTHER, that no final settlement between the OWNER and the CONTRACTOR shall abridge the right of any beneficiary hereunder, whose claim may be unsatisfied.

IN WITNESS, whereof, this the _____ day of _____, 20____.

ATTEST: (SEAL)

_____ _____

Secretary Principal

Approved as to form this _____ day
of _____, 20____. By _____

_____ By _____
City Attorney

ATTEST: (SEAL)

_____ _____
Secretary Surety

Approved this _____ day of

_____, 20____. By

_____

_____ By _____
Director of Finance (Title)

NOTE: Date of BOND must not be prior to date of Contract.

If CONTRACTOR is partnership, all partners should execute BOND.
IMPORTANT: Surety companies executing BONDS must appear on the Treasury Department's most current list (Circular 570 as amended) and be authorized to transact business in the state where the Project is located.

STATE OF _____)

)ss

COUNTY OF_____)

AFFIDAVIT
(as required by Section 285.530, Revised Statues of Missouri)

As used in this Affidavit, the following terms shall have the following meanings:

EMPLOYEE: Any person performing work or service of any kind for hire within the State of Missouri.

FEDERAL WORK AUTHORIZATION PROGRAM: Any of the electronic verification of work authorization programs operated by the United States Department of Homeland Security or an equivalent federal work authorization program operated by the United States Department of Homeland Security to verify information of newly hired employees, under the Immigration Reform and Control Act of 1986 (IRCA), P.L. 99-603.

KNOWINGLY: A person acts knowingly or with knowledge,

(a) with respect to the person's conduct or to attendant circumstances when the person is aware of the nature of the person's conduct or that those circumstances exist; or
(b) with respect to a result of the person's conduct when the person is aware that the person's conduct is practically certain to cause that result.

UNAUTHORIZED ALIEN: An alien who does not have the legal right or authorization under federal law to work in the United States, as defined in 8 U.S.C. 1324a(h)(3).

BEFORE ME, the undersigned authority, personally appeared_____
_____, who, being duly sworn, states on his oath or affirmation as follows:

1. My name is _____ and I am currently the President of _____(hereinafter "Contractor"), whose business address is _____ "and I am authorized to make this Affidavit.

2. I am of sound mind and capable of making this Affidavit and am personally acquainted with the facts stated herein.

3. Contractor is enrolled in and participates in a federal work authorization program with respect to the employees working in connection with the following services contracted between Contractor and the City of Joplin.

4. Contractor does not knowingly employ any person who is an unauthorized alien in connection with the contracted services set forth above.

5. Attached hereto is documentation affirming Contractor's enrollment and participation in a federal work authorization program with respect to the employees working in connection with the contracted services.

Further, Affiant sayeth not.

Affiant

Subscribed and sworn to before me this ____ day of _____, 20___.

Commission #

CERTIFICATION BY PROPOSED BIDDER REGARDING EQUAL EMPLOYMENT OPPORTUNITY

INSTRUCTIONS:

The certification is required pursuant to Executive Order 11246 (30 F.R. 12319-25). The implementing rules and regulations provide that any bidder or prospective contractor, or any of their proposed subcontractors, shall state as an initial part of the bid or negotiations of the contract whether it has participated in any previous contract or subcontract subject to the equal opportunity clause; and, if so, whether it has filed all compliance reports due under applicable instructions.

Where the certification indicates that the subcontractor has not filed a compliance report due under applicable instructions, such subcontractor shall be required to submit a compliance report before the owner approves the subcontract or permits work to begin under the subcontract.

BIDDER'S CERTIFICATION

NAME AND ADDRESS OF SUBCONTRACTOR (Include ZIP Code):

1. Bidder has participated in a previous contract or subcontract subject to the Equal Opportunity Clause.

   ☐YES ☐NO

2. Compliance reports were required to be filed in connection with such contract or subcontract.

   ☐YES ☐NO

3. Bidder has filed all compliance reports due under applicable instructions.

   ☐YES ☐NO

4. Have you ever been or are you being considered for sanction due to violation of Executive Order 11246, as amended?

   ☐YES ☐NO

NAME AND TITLE OF SIGNER (Please type):

SIGNATURE DATE

SECTION D:

DOCUMENTS NEEDED THROUGHOUT CONSTRUCTION

***The documents provided in this section are required IN ADDITION to all contract requirements. Exceptions will be dealt with on a case-by-case basis.*

CERTIFICATION REGARDING GOVERNMENT-WIDE
WAIVER AND RELEASE OF LIEN

WHEREAS, the undersigned, _____
(Name of Manufacturer, Materialman, or Subcontractor)

has furnished to _____ the following:
(Name of Contractor)

_____
(Kind of Material & Services Furnished)

_____ for use in the construction of a project

belonging to the City of Joplin, Missouri .

NOW, THEREFORE, the undersigned, _____
(Name of Manufacturer, Materialman, or Subcontractor)

_____ for and in consideration of $_____

and other good and valuable consideration, the receipt whereof is hereby acknowledged, do(es) hereby waive and release any and all liens or right to or claim of lien, on the above-described project and premises, under any law, common or statutory, on account of labor or materials, or both, heretofore or hereafter furnished by the undersigned to or for the account of said:

_____for said Project.
(Name of Contractor)

Given under my (our) hand(s) and seal(s) this ____ day of _____, 20_____.

_____
(Name of Manufacturer, Materialman, or Subcontractor)

By: _____
President, Vice President, Partner, or Owner, or, if signed by other than one of the foregoing, accompanied by Power of Attorney, signed by one of the foregoing in favor of the Signer. (Use designation applicable)

CERTIFICATE OF CONTRACTOR

_____ certifies that he/she is the _____
(Title)

of _____, the Contractor,
(Name of Contractor) (Address)

in a Contract dated _____, 20____, entered into between the Contractor and

City of Joplin, Missouri 602 South Main Street, Joplin, Missouri 64801,
(Name of Owner) (Address)

the Owner for the construction of:

Project:
32nd Street Widening
Central City Rd. to Schifferdecker Ave.
Jasper and Newton County, Missouri

and that he/she is legally authorized to and does make this certificate on behalf of said Contractor.

The undersigned, further certifies; (1) that all persons who have provided labor for the above-named Project, have been paid in full in accordance with rates for wages applicable to the Project, and (2) that the names of subcontractors and others providing labor for the Project, and the kind or kinds of services so provided are listed on the attached Subcontractor Disclosure Form and are attached hereto; and that a Final Waiver of Lien executed by each and all suppliers, materialmen, subcontractors and others providing materials and/or services has been obtained and delivered to the Owner.

By_____

Date_____

For_____

SECTION E:

PREVAILING WAGES

JASPER AND NEWTON COUNTY

STATE OF MISSOURI PREVAILING WAGE LAW AND RULES

Prevailing hourly rates of wages shown on the following annual wage order are hereby incorporated in the contract specifications and made a part thereof. Contractor's attention is particularly called to the Performance-Payment Bond form that includes provisions that will guarantee his faithful performance of the prevailing hourly wage requirements of the contract.

The Contractor shall be required to submit a certified copy of all weekly payrolls to the Owner and Engineer showing that the classification of workmen and the hourly wage rates being paid fully comply with the Wage Determination for the project.

The Contractor shall cause to be displayed a complete copy of the Wage Determination for the project as set forth in the Prevailing Wage Law.

Prior to Final Acceptance of the Project, the CONTRACTOR shall obtain and deliver in duplicate to the OWNER, through the ENGINEER, notarized Affidavits of Compliance With the Prevailing Wage Law, in the form attached hereto, from the CONTRACTOR and all subcontractors furnishing services for the Project.

Missouri
Division of Labor Standards
WAGE AND HOUR SECTION

MICHAEL L. PARSON, Governor

Annual Wage Order No. 27

Section 049
JASPER COUNTY

In accordance with Section 290.262 RSMo 2000, within thirty (30) days after a certified copy of this Annual Wage Order has been filed with the Secretary of State as indicated below, any person who may be affected by this Annual Wage Order may object by filing an objection in triplicate with the Labor and Industrial Relations Commission, P.O. Box 599, Jefferson City, MO 65102-0599. Such objections must set forth in writing the specific grounds of objection. Each objection shall certify that a copy has been furnished to the Division of Labor Standards, P.O. Box 449, Jefferson City, MO 65102-0449 pursuant to 8 CSR 20-5.010(1). A certified copy of the Annual Wage Order has been filed with the Secretary of State of Missouri.

Original Signed by
Taylor Burks, Director
Division of Labor Standards

Filed With Secretary of State: **March 10, 2020**

Last Date Objections May Be Filed: **April 9, 2020**

Prepared by Missouri Department of Labor and Industrial Relations

OCCUPATIONAL TITLE	**Prevailing Hourly Rate
Asbestos Worker	$31.86
Boilermaker	*$23.29
Bricklayer	*$23.29
Carpenter	**$40.76**
Lather	
Linoleum Layer	
Millwright	
Pile Driver	
Cement Mason	*$23.29
Plasterer	
Communications Technician	*$23.29
Electrician (Inside Wireman)	**$45.29**
Electrician Outside Lineman	*$23.29
Lineman Operator	
Lineman - Tree Trimmer	
Groundman	
Groundman - Tree Trimmer	
Elevator Constructor	*$23.29
Glazier	*$23.29
Ironworker	*$23.29
Laborer	$34.81
General Laborer	
First Semi-Skilled	
Second Semi-Skilled	
Mason	*$23.29
Marble Mason	
Marble Finisher	
Terrazzo Worker	
Terrazzo Finisher	
Tile Setter	
Tile Finisher	
Operating Engineer	$29.97
Group I	
Group II	
Group III	
Group III-A	
Group IV	
Group V	
Painter	*$23.29
Plumber	**$56.97**
Pipe Fitter	
Roofer	**$50.46**
Sheet Metal Worker	**$51.09**
Sprinkler Fitter	*$23.29
Truck Driver	*$23.29
Truck Control Service Driver	
Group I	
Group II	
Group III	
Group IV	

*The Division of Labor Standards received less than 1,000 reportable hours for this occupational title.
Public works contracting minimum wage is established for this occupational title using data provided by Missouri Economic Research and Information Center.
**The Prevailing Hourly Rate includes any applicable fringe benefit amounts for each occupational title.

Heavy Construction Rates for
JASPER County

Section 049

OCCUPATIONAL TITLE	**Prevailing Hourly Rate
Carpenter	$49.47
Millwright	
Pile Driver	
Electrician (Outside Lineman)	*$23.29
Lineman Operator	
Lineman - Tree Trimmer	
Groundman	
Groundman - Tree Trimmer	
Laborer	$40.72
General Laborer	
Skilled Laborer	
Operating Engineer	$47.99
Group I	
Group II	
Group III	
Group IV	
Truck Driver	$44.44
Truck Control Service Driver	
Group I	
Group II	
Group III	
Group IV	

Use Heavy Construction Rates on Highway and Heavy construction in accordance with the classifications of construction work established in 8 CSR 30-3.040(3).

Use Building Construction Rates on Building construction in accordance with the classifications of construction work established in 8 CSR 30-3.040(2).

If a worker is performing work on a heavy construction project within an occupational title that is not listed on the Heavy Construction Rate Sheet, use the rate for that occupational title as shown on the Building Construction Rate Sheet.

*The Division of Labor Standards received less than 1,000 reportable hours for this occupational title. Public works contracting minimum wage is established for this occupational title using data provided by Missouri Economic Research and Information Center.

**The Prevailing Hourly Rate includes any applicable fringe benefit amounts for each occupational title.

OVERTIME
and
HOLIDAYS

OVERTIME

For all work performed on a Sunday or a holiday, not less than twice (2x) the prevailing hourly rate of wages for work of a similar character in the locality in which the work is performed or the public works contracting minimum wage, whichever is applicable, shall be paid to all workers employed by or on behalf of any public body engaged in the construction of public works, exclusive of maintenance work.

For all overtime work performed, not less than one and one-half (1½) the prevailing hourly rate of wages for work of a similar character in the locality in which the work is performed or the public works contracting minimum wage, whichever is applicable, shall be paid to all workers employed by or on behalf of any public body engaged in the construction of public works, exclusive of maintenance work or contractual obligation. For purposes of this subdivision, **"overtime work"** shall include work that exceeds ten hours in one day and work in excess of forty hours in one calendar week; and

A thirty-minute lunch period on each calendar day shall be allowed for each worker on a public works project, provided that such time shall not be considered as time worked.

HOLIDAYS

January First;
The last Monday in May;
July Fourth;
The first Monday in September;
November Eleventh;
The fourth Thursday in November; and
December Twenty-Fifth;

If any holiday falls on a Sunday, the following Monday shall be considered a holiday.

Missouri
Division of Labor Standards
WAGE AND HOUR SECTION

MICHAEL L. PARSON, Governor

Annual Wage Order No. 27

Section 073
NEWTON COUNTY

In accordance with Section 290.262 RSMo 2000, within thirty (30) days after a certified copy of this Annual Wage Order has been filed with the Secretary of State as indicated below, any person who may be affected by this Annual Wage Order may object by filing an objection in triplicate with the Labor and Industrial Relations Commission, P.O. Box 599, Jefferson City, MO 65102-0599. Such objections must set forth in writing the specific grounds of objection. Each objection shall certify that a copy has been furnished to the Division of Labor Standards, P.O. Box 449, Jefferson City, MO 65102-0449 pursuant to 8 CSR 20-5.010(1). A certified copy of the Annual Wage Order has been filed with the Secretary of State of Missouri.

Original Signed by
Taylor Burks, Director
Division of Labor Standards

Filed With Secretary of State: **March 10, 2020**

Last Date Objections May Be Filed: **April 9, 2020**

Prepared by Missouri Department of Labor and Industrial Relations

OCCUPATIONAL TITLE	**Prevailing Hourly Rate
Asbestos Worker	*$23.92
Boilermaker	*$23.92
Bricklayer	*$23.92
Carpenter	**$30.15**
Lather	
Linoleum Layer	
Millwright	
Pile Driver	
Cement Mason	*$23.92
Plasterer	
Communications Technician	*$23.92
Electrician (Inside Wireman)	**$43.70**
Electrician Outside Lineman	*$23.92
Lineman Operator	
Lineman - Tree Trimmer	
Groundman	
Groundman - Tree Trimmer	
Elevator Constructor	*$23.92
Glazier	*$23.92
Ironworker	*$23.92
Laborer	$34.06
General Laborer	
First Semi-Skilled	
Second Semi-Skilled	
Mason	*$23.92
Marble Mason	
Marble Finisher	
Terrazzo Worker	
Terrazzo Finisher	
Tile Setter	
Tile Finisher	
Operating Engineer	$29.62
Group I	
Group II	
Group III	
Group III-A	
Group IV	
Group V	
Painter	*$23.92
Plumber	*$23.92
Pipe Fitter	
Roofer	**$37.46**
Sheet Metal Worker	$49.09
Sprinkler Fitter	*$23.92
Truck Driver	*$23.92
Truck Control Service Driver	
Group I	
Group II	
Group III	
Group IV	

*The Division of Labor Standards received less than 1,000 reportable hours for this occupational title.
Public works contracting minimum wage is established for this occupational title using data provided by Missouri Economic Research and Information Center.
**The Prevailing Hourly Rate includes any applicable fringe benefit amounts for each occupational title.

OCCUPATIONAL TITLE	**Prevailing Hourly Rate
Carpenter	$45.95
Millwright	
Pile Driver	
Electrician (Outside Lineman)	*$23.92
Lineman Operator	
Lineman - Tree Trimmer	
Groundman	
Groundman - Tree Trimmer	
Laborer	**$40.10**
General Laborer	
Skilled Laborer	
Operating Engineer	**$47.09**
Group I	
Group II	
Group III	
Group IV	
Truck Driver	*$23.92
Truck Control Service Driver	
Group I	
Group II	
Group III	
Group IV	

Use Heavy Construction Rates on Highway and Heavy construction in accordance with the classifications of construction work established in 8 CSR 30-3.040(3).

Use Building Construction Rates on Building construction in accordance with the classifications of construction work established in 8 CSR 30-3.040(2).

If a worker is performing work on a heavy construction project within an occupational title that is not listed on the Heavy Construction Rate Sheet, use the rate for that occupational title as shown on the Building Construction Rate Sheet.

*The Division of Labor Standards received less than 1,000 reportable hours for this occupational title. Public works contracting minimum wage is established for this occupational title using data provided by Missouri Economic Research and Information Center.

**The Prevailing Hourly Rate includes any applicable fringe benefit amounts for each occupational title.

OVERTIME
and
HOLIDAYS

OVERTIME

For all work performed on a Sunday or a holiday, not less than twice (2x) the prevailing hourly rate of wages for work of a similar character in the locality in which the work is performed or the public works contracting minimum wage, whichever is applicable, shall be paid to all workers employed by or on behalf of any public body engaged in the construction of public works, exclusive of maintenance work.

For all overtime work performed, not less than one and one-half (1½) the prevailing hourly rate of wages for work of a similar character in the locality in which the work is performed or the public works contracting minimum wage, whichever is applicable, shall be paid to all workers employed by or on behalf of any public body engaged in the construction of public works, exclusive of maintenance work or contractual obligation. For purposes of this subdivision, **"overtime work"** shall include work that exceeds ten hours in one day and work in excess of forty hours in one calendar week; and

A thirty-minute lunch period on each calendar day shall be allowed for each worker on a public works project, provided that such time shall not be considered as time worked.

HOLIDAYS

January First;
The last Monday in May;
July Fourth;
The first Monday in September;
November Eleventh;
The fourth Thursday in November; and
December Twenty-Fifth;

If any holiday falls on a Sunday, the following Monday shall be considered a holiday.

PREVAILING WAGE LAW, CHAPTER 290

Section 290.210 through 290.340 As Amended RSMo 1987, 1986, & Cumm. Supp. 1993

290.210 Definitions - As used in Section 290.210 to 290.340, unless the context indicates otherwise:

(1) "Construction" includes construction, reconstruction, improvement, enlargement, alteration, painting, and decorating, or major repairs

(2) "Department" means the Department of Labor and Industrial Relations.

(3) "Locality" means the county where the physical work upon public works is performed, except that if there is not available in the county a sufficient number of competent skilled workmen to construct the public works efficiently and properly, "locality" may include two or more counties adjacent to the one in which the work or construction is to be performed and from which such workers may be obtained in sufficient numbers to perform the work, and that, with respect to contracts with the state highway commission, "locality" may be construed to include two or more adjacent counties from which workmen may be accessible for work on such construction.

(4) "Maintenance work" means the repair, but not the replacement of existing facilities when the size, type, or extent of the existing facilities is not thereby changed or increased.

(5) "Prevailing hourly rate of wages" means the wages paid generally in the locality in which the public works is being performed, to workmen engaged in work of a similar character including the basic hourly rate of pay and the amount of the rate of contributions irrevocably made by a contractor or subcontractor to a trustee or to a third person pursuant to a fund, plan, or program, and the amount of the rate of costs to the contractor or subcontractor which may be reasonably anticipated in providing benefits to workmen and mechanics pursuant to an enforceable commitment to carry out a financially responsible plan or program which was communicated in writing to the workmen affected, for medical or hospital care, pensions on retirement or death, compensation for injuries or illness resulting from occupational activity, or insurance to provide any of the foregoing, for unemployment benefits, life insurance disability and sickness insurance, accident insurance, for vacation and holiday pay, for defraying costs of apprenticeship or other similar programs, or for other bona fide fringe benefits, but only where the contractor or subcontractor is not required by other federal or state law to provide any of the benefits; provided that the obligation of a contractor or subcontractor to make payment in accordance with the prevailing wage determination of the department, insofar as Sections 290.210 to 290.340 are concerned, may be discharged by the making of payments in cash, by the making of irrevocable contributions to trustees or third persons as provided herein, by the assumption of an enforceable commitment to bear the costs of a plan or program as provided herein, or any combination thereof, where the aggregate of such payments, contributions, and costs is not less than the rate of pay plus the other amounts as provided herein.

(6) "Public Body" means the State of Missouri or any officer, official, authority, board or commission of the state or other political subdivision thereof, or any institution supported in whole or in part by public funds.

(7) "Public Works" means all fixed works constructed for public use or benefit or paid for wholly or in part out of public funds. It also includes any work done directly by any public utility company when performed by it pursuant to the order of the public service commission or other public authority whether or not it be done under public supervision or direction or paid for wholly or in part out of public funds, when let to contract by said utility. It does not include any work done for or by any drainage or levee district.

(8) "Workmen" means laborers, workmen, and mechanics.

290.220 Policy declared - It is hereby declared to be the policy of the State of Missouri that a wage of no less than the prevailing hourly rate of wages for work of a similar character in the locality in which the work is performed, shall be paid to all workmen employed by or on behalf of any public body engaged in public works exclusive of maintenance work.

290.230 Prevailing wage rates required on construction of public works.

(1) Not less than the prevailing hourly rate of wages for work of a similar character in the locality in which the work is performed, and not less than the prevailing hourly rate of wages for legal holiday and overtime work, shall be paid to all workmen employed by or on behalf of any public body engaged in the construction of public works, exclusive of maintenance work. Only such workmen as are directly employed by contractors or subcontractors in actual construction work on the site of the building or construction job shall be deemed to be employed upon public works.

(2) When the hauling of materials or equipment includes some phase of construction other than the mere transportation to the site of the construction, workmen engaged in this dual capacity shall be deemed employed directly on public works.

290.240 Department of Labor and Industrial Relations to enforce - make regulations

(1) The department shall inquire diligently as to any violation of Sections 290.210 to 290.340, shall institute actions for penalties herein prescribed, and shall enforce generally the provisions of Sections 290.210 to 290.340.

(2) The department may establish rules and regulations for the purpose of carrying out the provisions of Sections 290.210 to 290.340.

290.250 Prevailing wage, incorporation into contracts -- failure to pay, Penalty -- complaint of violation, public body or prime contractor to withhold payment. Every public body authorized to contract for or construct public works, before advertising for bids or undertaking such construction shall request the department to determine the prevailing rates of wages for workmen for the class or type of work called for by the public works, in the locality where the work is to be performed. The department shall determine the prevailing hourly rate of wages in the locality in which the work is to be performed for each type of workman required to execute the contemplated contract and such determination or schedule of the prevailing hourly rate of wages shall be attached to and made a part of the specifications for the work. The public body shall then specify in the resolution or ordinance and in the call for bids for the contract, what is the prevailing hourly rate of wages in the locality for each type of workman needed to execute the contract and also the general prevailing rate for legal holiday and overtime work. It shall be mandatory upon the contractor to whom the contract is awarded and upon any subcontractor under him, to pay not less than the specified rates to all workmen employed by them in the execution of the contract. The public body awarding the contract shall cause to be inserted in the contract a stipulation to the effect that not less than the prevailing hourly rate of wages shall be paid to all workmen performing work under the contract. It shall also require in all contractor's bonds that the contractor include such provisions as will guarantee the faithful performance of the prevailing hourly wage clause as provided by the contract. The contractor shall forfeit as a penalty to the state, county, city, and county, city, town, district, or other political subdivision on whose behalf the contract is made or awarded ten dollars for each workman employed, for each calendar day, or portion thereof, such workman is paid less than the said stipulated rates for any work done under said contract, by him or by any subcontractor under him, and the said public body awarding the contract shall cause to be inserted in the contract a stipulation to this effect. It shall be the duty of such public body awarding the contract, and its agents and officers, to take

cognizance of all complaints of all violations of the provisions of Sections 290.210 to 290.340 committed in the course of the execution of the contract, and when making payments to the contractor becoming due under said contract, to withhold and retain therefrom all sums and amounts due and owing as a result of any violation of Sections 290.210 to 290.340. It shall be lawful for any contractor to withhold from any subcontractor under him sufficient sums to cover any penalties withheld from him by the awarding body on account of said subcontractor's failure to comply with the provisions of Sections 290.210 to 290.340 and if payment has already been made to him, the contractor may recover from the amount of the penalty in a suit at law.

290.260 Determination of hourly rate for highways and transportation commission, when made, where filed, objections, hearing, determination

(1) The department, as it deems necessary, shall from time to time investigate and determine the prevailing hourly rate of wages in the localities. A determination applicable to every locality to be contained in a general wage order shall be made annually on or before July 1st of each year for the Missouri State Highways and Transportation Commission and shall remain in effect until supersede by a new general wage order. In determining prevailing rates, the department shall ascertain and consider the applicable wage rates established by collective bargaining agreements, if any, and the rates that are paid generally within the locality.

(2) A certified copy of the determination so made shall be filed immediately with the Secretary of State and with the department in Jefferson City. Copies shall be supplied by the department to all persons requesting them within ten days after the filing.

(3) At any time within thirty days after the certified copies of the determinations have been filed with the Secretary of State and the Department, any person who is affected thereby may object in writing to the determination or the part thereof that he deems objectionable by filing a written notice with the department, stating the specific grounds of the objection.

(4) Within thirty days of the receipt of the objection, the department shall set a date for a hearing on the objection. The date for the hearing shall be within sixty days of the receipt of the objection. Written notice of the time and place of the hearing shall be given to the objectors at least ten days prior to the date set for the hearing.

(5) The department, at its discretion, may hear each written objection separately or consolidate for hearing any two or more written objections. At the hearing, the department shall first introduce in evidence the investigation it instituted and the other facts that were considered at the time of the original determination that formed the basis for its determination. The department or the objector or any interested party thereafter may introduce any evidence that is material to the issues.

(6) Within twenty days of the conclusion of the hearing, the department must rule on the written objection and make the final determination that it believes the evidence warrants. Immediately, the department shall file a certified copy of its final determination with the Secretary of State and with the Department and shall serve a copy of the final determination on all parties to the proceedings by personal service or by registered mail.

(7) This final decision of the department of the prevailing wages in the locality is subject to review in accordance with the provisions of Chapter 536, RSMo. Any person affected, whether or not the person participated in the proceedings resulting in the final determination, may have the decision of the department reviewed. The filing of the final determination with the Secretary of State shall be considered a service of the final determination on persons not participating in the administrative proceedings resulting in the final determination.

(8) At any time before trial any person affected by the final determination of the department may intervene in the proceedings to review under chapter 536, RSMo, and be made a party to the proceedings.

(9) All proceedings in any court affecting a determination of the department under the provisions of Sections 290.210 to 290.340 shall have priority in hearing and determination over all other civil proceedings pending in the court, except election contests.

290.262 Determination of hourly rate by location and occupation title, when made, where filed-objections, hearings-final determination-notice to department by public body, when - (1) Except as otherwise provided in section 290.260, the department shall annually investigate and determine the prevailing hourly rate of wages in each locality for each separate occupational title. A final determination applicable to every locality to be contained in an annual wage order shall be made annually on or before July first of each year and shall remain in effect until superseded by a new annual wage order or as otherwise provided in this section. In determining prevailing rates, the department shall ascertain and consider the applicable wage rates established by collective bargaining agreements, if any, and the rates that are paid generally within the locality, and shall, by March tenth of each year, make an initial determination for each occupational title within the locality.

(2) A certified copy of the initial determinations so made shall be filed immediately with the secretary of state and with the department in Jefferson City. Copies shall be supplied by the department to all persons requesting them within ten days after filing.

(3) At any time within thirty days after the certified copies of the determinations have been filed with the secretary of state and the department, any person who is affected thereby may object in writing to a determination or a part thereof that he deems objectionable by filing a written notice with the department, stating the specific grounds of the objection. If no objection is filed, the determination is final after thirty days.

(4) After the receipt of the objection, the department shall set a date for a hearing of the objection. The date for the hearing shall be within sixty days of the receipt of the objection. Written notice of the time and place of the hearing shall be given to the objectors at least ten days prior to the date set for the hearing.

(5) The department, at its discretion, may hear each written objection separately, or consolidate for hearing any two or more written objections. At the hearing, the department shall first introduce in evidence the investigation it instituted and the other facts that were considered at the time of the original determination that formed the basis for its determination. The department, or the objector, or any interested party thereafter may introduce any evidence that is material to the issues.

(6) Within twenty days of the conclusion of the hearing, the department shall rule on the written objection and make the final determination that it believes the evidence warrants. Immediately, the department shall file a certified copy of its final determination with the secretary of state and with the department and shall serve a copy of the final determination on all parties to the proceedings by personal service or by registered mail.

(7) This final decision of the department of the prevailing wages in the locality for each occupational title is subject to review in accordance with the provisions of Chapter 536, RSMo. Any person affected, whether or not the person participated in the proceedings resulting in the final determination, may have the decision of the department reviewed. The filing of the final determination with the secretary of state shall be considered a service of the final determination on persons not participating in the administrative proceedings resulting in the final determination.

(8) At any time before trial, any person affected by the final determination of the department may intervene in the proceedings to review under Chapter 536, RSMo, and be made a party to the proceedings.

(9) Any annual wage order made for a particular occupational title in a locality may be altered once each year, as provided in this subsection. The prevailing wage for each such occupational title may be adjusted on the anniversary date of any collective bargaining agreement that covers all persons in that particular occupational title in the locality in accordance with any annual incremental wage increases set in the collective bargaining agreement. If the prevailing wage for an occupational title is adjusted pursuant to this subjection, the employee's representative or employer in regard to such collective bargaining agreement shall notify the department of this adjustment, including the effective date of the adjustment. The adjusted prevailing wage shall be in effect until the next final annual wage order is issued pursuant to this section. The wage rates for any particular job, contracted and commenced within sixty days of the contract date, which were set as a result of the annual or revised wage order, shall remain in effect for the duration of that particular job.

(10) In addition to all other reporting requirements of sections 290.210 to 290.340, each public body that is awarding a contract for a public works project shall, prior to beginning of any work on such public works project, notify the department, on a form prescribed by the department, of the scope of the work to be done, the various types of craftsmen who will be needed on the project, and the date work will commence on the project.

290.263 Hourly wage must equal or exceed federal minimum wage - The hourly wages to be paid as prescribed in Section 290.250 to workmen upon public works shall not be less than the minimum wage specified under Section 6(a)(1) of the Fair Labor Standards Act of 1938, as amended.

290.265 Wage rates posted, where - A clearly legible statement of all prevailing hourly wage rates to be paid to all workmen employed in order to execute the contract and employed on the construction of the public works shall be kept posted in a prominent and easily accessible place at the site thereof by each contractor and subcontractor engaged in the public works projects under the provisions of this law and such notice shall remain posted during the full time that any such workman shall be employed on the public works.

290.270 Declaration as to prevailing wages final - maximum wages and hours not limited - The finding of the department ascertaining and declaring the prevailing hourly rate of wages shall be final for the locality, unless reviewed under the provisions of Sections 290.210 to 290.340. Nothing in Sections 290.210 to 290.340, however, shall be construed to prohibit the payment to any workman employed on any public work of more than the prevailing rate of wages. Nothing in Sections 290.210 to 290.340 shall be construed to limit the hours of work that may be performed by any workman in any particular period of time.

290.280 Administration of oaths - subpoenas - enforcement of subpoenas - The authorized representative of the department may administer oaths, take or cause to be taken the depositions of witnesses, and require by subpoena the attendance and testimony of witnesses and the production of all books, records, and other evidence relative to any matter under investigation or hearing. The subpoena shall be signed and issued by the department's authorized representative. In case of failure of any person to comply with any subpoena lawfully issued under this section, or any refusal of any witness to produce evidence or to testify to any matter regarding which he may be lawfully interrogated, the authorized representative of the department may proceed to enforce obedience to the subpoenas in the manner provided by Section 536.077, RSMo, for administrative agencies. The authorized representative of the department shall have the power to certify to official acts.

290.290 Contractor's payroll records, contents - affidavit of compliance required - signs on motor

vehicles and equipment, requirements - temporary stationary sign, when - exception -

(1) The contractor and each subcontractor engaged in any construction of public works shall keep full and accurate records clearly indicating the names, occupations, and crafts of every workman employed by them in connection with the public work together with an accurate record of the number of hours worked by each workman and the actual wages paid therefor. The payroll records required to be so kept shall be open to inspection by any authorized representative of the contracting public body or of the department at any reasonable time and as often as may be necessary and such records shall not be destroyed or removed from the state for the period of one year following the completion of the public work in connection with which the records are made.

(2) Each contractor and subcontractor shall file with the contracting public body upon completion of the public work and prior to final payment therefor an affidavit stating that he had fully complied with the provisions and requirements of this chapter, and no public body shall be authorized to make final payment until such affidavit is filed therewith in proper form and order.

(3) Each contractor and subcontractor engaged in any construction of public works shall have its name, acceptable abbreviation or recognizable logo, and the name of the city and state of the mailing address of the principal office of the company, on each motor vehicle and motorized self-propelled piece of equipment that is used in connection with such public works project during the time the contractor or subcontractor is engaged on such project. The sign shall be legible from a distance of twenty feet, but the size of the lettering need not be larger than two inches. In cases where equipment is leased or where affixing a legible sign to the equipment is impractical, the contractor may place a temporary stationary sign, with the information required pursuant to this subsection, at the main entrance of the construction project in place of affixing the required information on the equipment, so long as such sign is not in violation of any state or federal statute, rule, or regulation. Motor vehicles that are required to have similar information affixed thereto pursuant to requirements of a regulatory agency of the state or federal government are exempt from the provisions of this subsection.

(4) The provisions of subsection 3 of this section shall not apply to construction of public works for which the contract awarded is in the amount of two hundred fifty thousand dollars or less.

290.300 Actions for prevailing wages by workmen authorized - Any workman employed by the contractor or by any subcontractor under the contractor who shall be paid for his services in a sum less than the stipulated rates for work done under the contract, shall have a right of action for double whatever difference there may be between the amount so paid and the rates provided by the contract together with a reasonable attorney's fee to be determined by the court, and an action brought to recover same shall be deemed to be a suit for wages, and any and all judgments entered therein shall have the same force and effect as other judgments for wages.

290.305 Rebates by workmen prohibited, exceptions. No person, firm, or corporation shall violate the wage provisions of any contract contemplated in Sections 290.210 to 290.340 or suffer or require any employee to work for less than the rate of wages so fixed, or violate any of the provisions contained in Sections 290.210 to 290.340. Where workmen are employed and their rate of wages has been determined as provided in Sections 290.210 to 290.340, no person, either for himself or any other person, shall request, demand, or receive, either before or after such workman is engaged, that such workman pay back, return, donate, contribute, or give any part or all of said workman's wages, salary, or thing of value, to any person, upon the statement, representation, or understanding that failure to comply with such request or demand will prevent such workman from procuring or retaining employment, and no person shall, directly or indirectly, pay, request, or authorize any other person to violate this section. This section does not apply to any agent or representative of a duly constituted labor organization acting in the collection of dues or assessments of such organization.

290.315 Deductions from wages agreement to be written, approval of public body required - All contractors required in Sections 290.210 to 290.340 to pay not less than the prevailing rate of wages shall make full payment of such wages in legal tender, without any deduction for food, sleeping accommodations, transportation, use of small tools, or any other thing of any kind or description. This section does not apply where the employer and employee enter into an agreement in writing at the beginning of said term of employment covering deductions for food, sleeping accommodations, or other similar items, provided such agreement is submitted by the employer to the public body awarding the contract and the same is approved by such public body as fair and reasonable.

290.320 Advertising for bids before prevailing wage is determined prohibited - No public body, officer, official, member, agent, or representative authorized to contract for public works shall fail, before advertising for bids or contracting for such construction, to have the department determine the prevailing rates of wages of workmen for each class of work called for by the public works in the locality where the work is to be performed as provided in Sections 290.210 to 290.340.

290.325 Awarding contract on payment without prevailing wage determinations prohibited - No public body, officer, official, member, agent, or representative thereof authorized to contract for public works shall award a contract for the construction of such improvement or disburse any funds on account of the construction of such public improvement, unless prevailing rates of wages of workmen for the class of work called for by such public works in the locality where the work is to be performed and such determination has been made a part of the specifications and contract for such public works.

290.330 Convicted violators of Sections 290.210 to 290.340 listed, effect of - The department after investigation, upon complaint or upon its own initiative, shall file with the Secretary of State a list of the contractors and subcontractors whom it finds have been prosecuted and convicted for violations of Sections 290.210 to 290.340 and such contractor or subcontractor, or simulations thereof, shall be prohibited from contracting directly or indirectly with any public body for the construction of any public works or from performing any work on the same as a contractor or subcontractor for a period of one year from the date of the first conviction for such violation and for a period of three years from the date of such subsequent violation and conviction thereof. No public body shall award a contract for a public works to any contractor or subcontractor, or simulation thereof, during the time that its name appears on said list. The filing of the notice of conviction with the Secretary of State shall be notice to all public bodies and their officers, officials, members, agents, and representatives.

290.335 Notice of violation, failure to comply, attorney general shall sue, injunctive relief authorized - If it is found that a public body, contractor, or subcontractor has not complied with any of the terms of Sections 290.210 to 290.340, the department shall give notice of the precise violations in writing to such public body, contractor, or subcontractor. Sufficient time may be allowed for compliance therewith as the department deems necessary. After the expiration of the time prescribed in said notice, the department may, in writing, inform the Attorney General of the fact that such notice has been given, and that the public body, contractor, or subcontractor or the authorized representative or agent thereof to whom it was directed has not complied with such notice. Upon receipt thereof, the Attorney General shall, at the earliest possible time, bring suit in the name of the state in the circuit court of the county in which such public body is located or where any such contractor or subcontractor is engaged in any further work or payments thereunder if the contract has been awarded, until the requirements of such notice are fully complied with. The court may issue a temporary restraining order with due notice to the defendant in such action. The plaintiff shall, in any such injunctive action, post an adequate bond to be set by the circuit judge. Upon final hearing thereof, if the court is satisfied that the requirements of the notice by the department to the defendant were not unreasonable or arbitrary, it shall issue an order enjoining the awarding of such contract for a public works, or any further work or payments thereunder if the contract has been awarded, until the notice is fully complied with. Such injunction shall continue operative until the court is satisfied

that the requirements of such notice have been complied with and the court shall have an exercise with respect to the enforcement of such injunctions all the power in it in other similar cases. Both the plaintiff and the defendant in such action have the same rights of appeal as are provided by law in other injunction proceedings.

290.340 Penalty for violation - Any officer, official, member, agent, or representative of any public body, contractor, or subcontractor who willfully violates and omits to comply with any of the provisions and requirements of Sections 290.210 to 290.340 shall be punished for each violation thereof by a fine not exceeding five hundred dollars, or by imprisonment not exceeding six months, or both such fine and imprisonment. Each day such violation or omission continues shall constitute a separate offense as contemplated by this section.

RULES OF DEPARTMENT OF LABOR AND INDUSTRIAL RELATIONS
CHAPTER 3 - PREVAILING WAGE LAW RULES

8 CSR-30-3.010 Prevailing Wage Rates for Public Works Projects (Purpose: This rule sets forth prevailing wage requirements relative to work performed by workmen on public funded projects.)

(1) All public bodies of Missouri contemplating construction work must obtain from the department a determination of the prevailing hourly rate of wages in the locality (wage determination) that is applicable to that construction. The rates so determined shall be incorporated in the contract specifications and made a part of those specifications, except that construction contracts of the State Highway and Transportation Commission need not list specific wage rates to apply, but may refer to the wage rates contained in the appropriate General Wage Orders issued by the department, as applicable.

(2) Request for wage determinations shall be initiated at least thirty (30) calendar days before advertisement of the specifications for the contract for which the determination is sought. An exception from this provision will be made by the department only upon a proper showing of extenuating circumstances. The department has prepared and printed Form No. PW-1 for use in making a request. The form may be secured by writing Division of Labor Standards, P.O. Box 449, Jefferson City, Missouri 65102.

(3) A separate request must be filed for each separate project by the public body, except the State Highway and Transportation Commission, which will be furnished prevailing wage determinations under General Wage Orders. One public body cannot use the wage determinations made by this department for another public body even though both public bodies are located in the same county. Special wage determinations issued by the department only apply to the public body and its project described in the special wage determination.

(4) Each wage determination issued by the department shall contain the current wage rates prevailing in the locality at the time the determination is issued. To ensure that the current prevailing hourly rate of wages as established in the wage determination is paid on the public works project, the public works project must be started in good faith or a contract awarded for the project within one hundred eighty (180) days from the date the wage determination is issued. If the proposed public works project is not started in good faith or a contract is not awarded for completion of the project within one hundred eighty (180) days from the date the wage determination is issued, before proceeding with the project the public body shall request from the department an amended wage determination, containing the then current prevailing hourly rate of wages. The amended wage determination shall be subject to objection pursuant to the provisions of section 290.260, RSMo. An amended wage determination becomes final either by order of the Labor and Industrial Relations Commission or automatically if not objected to pursuant to section 290.260, RSMo. This final determination shall contain the prevailing wage rates to be paid on the project. This provision shall not apply to the General Wage Order issued by the department for the State Highway and Transportation Commission.

(5) It should be understood by all interested parties that the certified prevailing wage rates determined by the department are minimum wage rates. The contractor may not pay less than the prevailing wage rates determined by the department for the project or contract awarded to him/her as set forth in the proposal on which s/he submitted his/her bid. Employees are free to bargain for a higher rate of pay and employers are free to pay a higher rate of pay.

(6) Where classification of workers not included in the original contract is desired, the public

body shall request the department to issue a determination of the prevailing hourly rate of wages in the appropriate localities. In these cases, it shall be the responsibility of the public body to make an arrangement with the contract that would result in compliance with the wage determinations, as though they were a part of the original contract.

(7) The public body shall make examinations of the payrolls and other records of each contractor or subcontractor as may be necessary to assure compliance with the provisions of the law. In connection with those examinations, particular attention should be given to the correctness of classifications and any disproportionate employment of any workers. The examinations shall be of a frequency that may be necessary to assure conformity with the provisions of the law. An examination shall be made after the project has been substantially completed, but prior to the acceptance of the affidavit as required by section 290.290, RSMo. If any violation of sections 290.210 to 290.340, RSMo is discovered by the inspecting public body, it's their duty under section 290.250, RSMo to withhold and retain from payments to the contractor all sums and amounts due and owing as a result of any violation. Any violation shall be immediately reported to the Division of Labor Standards at P. O. Box 449, Jefferson City, Missouri 65102 or by telephone.

(8) Each month, the successful bid contractors shall submit certified copies of their current payrolls to the contracting public body. The public body, upon receipt of the payrolls on a project, shall keep the payrolls on file for a period of one (1) year from the date of submission of the final payrolls by the contractor. The payroll records shall set out accurately and completely the following: name and address of each worker, the class or type of worker, rate of pay, daily and weekly number of hours worked for each class or type of work performed, deduction made, and actual wages paid for each class or type of work performed by each worker. The payroll records shall be made available at all times for inspection by authorized representatives of the Department of Labor and Industrial Relations.

Woodman Engineering Company v. Butler, 442 SW2d 83 (Mo. App. 1969). The function of reviewing court in prevailing wage cases is to decide if the determination of the commission was authorized by law and was supported by competent and substantial evidence upon the whole record. A decision clearly contrary to the evidence should be set aside. However, all pertinent evidence and factors must be considered in determining the applicable prevailing wage.

City of Joplin v. Industrial Commission of Missouri, 329 SW2d 687 (Mo en banc 1959). Administrative agencies do not have authority to determine constitutionality of legislation. Determination of prevailing wage earnings by commission must be based upon all current relevant factors.

AFFIDAVIT OF
COMPLIANCE WITH THE PREVAILING WAGE LAW

Before me, the undersigned Notary Public, in and for the County of _____ State of Missouri, personally came and appeared

_____
(Name) (Position)

of the _____
(Name of the Company)

(A corporation) (a partnership) (a proprietorship) and after being duly sworn, did depose and say that all provisions and requirements set out in Chapter 290, Sections 290.210 through and including 290.340, Missouri Revised Statutes, pertaining to the payment of wages to workmen employed on public works projects have been fully satisfied and there has been no exception to the full and complete compliance with said provisions and requirements with Wage Determination No(s). issued by the Division of Labor Standards on the day of _____, 20____. in carrying out the contract and work in connection with the construction of

Project:
32nd Street Widening
Central City Rd. to Schifferdecker Ave.
Jasper and Newton County, Missouri

in the City of Joplin, Missouri, in Jasper County, Missouri, and completed on the _____ day of _____, 20____.

_____
(Signature)

Subscribed and sworn to me this _____ day of _____, 20____.

My Commission expires: _____.

_____
Notary Public

Statement of Compliance

(To be submitted with weekly payroll if not using form WH-347)

I hereby certify the following:

1) The payroll for the payroll period contains the information required to be provided under §5.5 (a)(3)(ii) of Regulations, 29 CFR part 5, the appropriate information is being maintained under §5.5 (a)(3)(i) of Regulations, 29 CFR part 5, and that such information is correct and complete;

2) That each laborer or mechanic (including each helper, apprentice, and trainee) employed on the contract during the payroll period has been paid the full weekly wages earned, without rebate, either directly or indirectly, and that no deductions have been made either directly or indirectly from the full wages earned, other than permissible deductions as set forth in Regulations, 29 CFR part 3;

3) That each laborer or mechanic has been paid not less than the applicable wage rates and fringe benefits or cash equivalents for the classification of work performed, as specified in the applicable wage determination incorporated into the contract.

_____ _____

Signature of Contractor or Subcontractor Date

APPENDIX A:

JOB SPECIAL PROVISIONS

Table of Contents

Job Special Provisions

General Job Special Provisions	JSP-0400-01
Utility Coordination	JSP-0400-02
Status of Right-of-Way	JSP-0400-03
USACE Permit Compliance	JSP-0400-04
Mobilization	JSP-0400-05
Contractor Furnished Construction Staking & Surveying	JSP-0400-06
Erosion & Sediment Control	JSP-1000-01
Clearing & Grubbing / Tree & Brush Removal	JSP-1100-01
Demolition & Removal	JSP-1100-02
Embankment & Embankment (Special)(Minimum 40% Chert)	JSP-1200-01
MoDOT Type 5 Aggregate Base	JSP-1400-01
MoDOT Type 1 Aggregate Surface	JSP-1400-02
Milling	JSP-2300-01
Southern Trails Monument Signage	JSP-2300-02
Permanent Signing	JSP-2300-03
Adjustment of Manholes & Valves	JSP-2300-04
MoDOT Rock Lining for Culvert Outlet	JSP-2303-01
Flexamat	JSP-2303-02
Rip-Rap Splash Pad	JSP-2303-03
Concrete Gutter Crossing with Integral Curb	JSP-3100-01
Curb Flume & Concrete Flume	JSP-3100-02
Concrete Curb & Gutter	JSP-3200-01
Concrete Sidewalk	JSP-3300-01
Cast-in-Place Concrete Sidewalk Wall	JSP-3300-02
Driveway	JSP-3400-01
Box Culvert & End Sections	JSP-4200-01
Drop Inlet	JSP-4400-01
Drain Basin	JSP-4400-02
Irrigation System	JSP-5100-01
Traffic Control	JSP-6700-01
Traffic Signal Modifications	JSP-9000-01
Fiber Optic	JSP-9000-02

JOB SPECIAL PROVISION JSP-0400-01
GENERAL JOB SPECIAL PROVISIONS

1.0 COORDINATION OF CONTRACT DOCUMENTS

The contract documents are essential parts of the contract, and a requirement occurring in one shall be as binding as though occurring in all. Contract documents are intended to be complementary and to describe and provide for a complete work. In case of discrepancy among contract documents, the governing ranking will be:

(a) Agreement
(b) Job Special Provisions
(c) General Conditions
(d) Project Specific Drawings
(e) Special Provisions to City of Joplin, Standard Specifications
(f) City of Joplin, Standard Specifications
(g) Standard Drawings
(h) Bid Items or Quantities
(i) All other sections of the contract documents

In case of discrepancies, calculated dimensions will govern over scaled dimensions.

All contractors, including subcontractors, shall not take advantage of any apparent error or omission in the contract documents. If an error or omission is discovered, the engineer shall be notified promptly so corrections and interpretations necessary to fulfill the intent of the contract can be made. A failure to give notice shall render the effects of any error or omission non-compensable and any delay non-excusable.

2.0 CONSTRUCTION VIDEO AND PHOTOGRAPHY

2.1 SCOPE

Furnish all labor, materials and equipment necessary to provide high quality color digital audio/video recording and digital photographs of the Project site surface conditions as specified herein. Furnish to the Engineer an original and one copy of a continuous high quality color audio/video DVD recording of surface conditions along the entire route of the proposed Work. Furnish to the Engineer high quality color digital photographs on data storage media device.

The video recording and photographs shall be taken:

- Prior to any construction activity.
- After completion of all construction activities.

The Engineer reserves the right to reject audio/video DVD recordings and digital photographs which do not conform to the project specifications. This includes, but is not limited to, poor quality, unintelligible audio or uncontrolled pan or zoom. Any DVD recording or digital photographs rejected by the Engineer will be re-recorded/re-photographed at no cost to the Owner. Under no circumstances shall

construction begin until the Engineer has received and accepted the audio/video DVD(s) and photographs.

A qualified, established audio/video recording firm knowledgeable in construction practices and experienced in audio/video recording and photographing of construction projects shall perform the video. If requested, the videographer/photographer shall provide examples of prior work and/or references.

2.2 CONSTRUCTION REQUIREMENTS

The Contractor shall submit the required photos and video prior to the issuance of a Notice to Proceed, during construction as directed by the Engineer, and immediately prior to acceptance of the project. Final payment for the project will not occur until the Contractor has completed this item.

2.2.1 Color Audio/Video and Digital Photography Survey

(1) Coverage shall include, but not be limited to, all existing roadways, sidewalks, fences, curbs, driveways, buildings and structures, ditches, above ground utilities, traffic signal and street light cabinets, landscaping, trees, culverts, headwalls, retaining walls, signage and other physical features located within the zone of influence of the construction. Particular and detailed attention shall be given to any defects noted, such as cracks, disturbed areas, damaged items, or as Engineer may direct. The coverage may be expanded if Engineer so directs.

(2) All filming or photography will be done during daylight hours. No filming or photography shall be performed if weather is not acceptable, such as rain, fog, snow, etc.

(3) It is the intent of this coverage to accurately and clearly document and define pre-existing, post-construction and/or construction conditions to minimize potential construction claims. Physically mark the excavation areas with highly visible fluorescent paint prior to audio/video recording and photography. The markings shall include stationing information.

(4) The Engineer will have the opportunity to accompany the videographer/photographer.

(5) Sufficient time will be allowed for the Engineer to review the Audio/Video recording and the digital photographs prior to construction.

2.2.2 Audio and Color Video Recording [Viewable on Windows media]

(1) Audio/Video DVDs shall be commercial grade in a standard write protected format. Video system shall have capability of producing hard copy prints of selected individual still frames. Video may be captured originally in Digital Video format, but must be transferred to DVD disc for delivery to the Engineer, and shall be formatted to be played in the Standard Install Windows Media player.

(2) Video recordings shall be divided into multiple segments, and a field log listing those segments shall be provided with the original tapes and DVD discs of all recordings. A visual recording of the field notes and log (listing the videotape segments) shall be included at the end of each respective original recording tape. Items to note on the field log include, but are not limited too, the tract number, street or road viewed, filming start- and stop-times, side (of street) being viewed, point starting from, traveling direction and ending destination point. Written documentation must coincide with the information on the disk so as to make easy retrieval of locations sought for at a later date. All original video field notes and logs (signed by the photographer) shall be released to the Engineer.

(3) Audio/Video recordings shall begin with a verbal description of the current date and time, the Owner's name, Project or Contract name and number, Contractor's name, and location information such as street name, direction of travel, viewing side, etc. Translucent information consisting of the month, day, year and time of recording must appear on the viewing screen on all video recordings, by electronic means. Information appearing on the DVD must be continuous and run simultaneously by the computer generated translucent digital information. No editing or overlaying of information at a later date will be acceptable.

(4) Audio shall be recorded at the same time as the video recording and provide the same information as on the video log sheet. Recordings shall include "continuous" narration identifying the viewing direction, street address or station number location, direction of progress, description of features and the existing condition of improvements or damage within the zone of influence shown on the viewing screen. Identify houses and buildings by house number, when visible, in such a manner that structures of the proposed construction, (i.e. manholes, etc.) can be located by reference. Special commentary shall be given for unusual conditions of buildings, sidewalks and curbing, foundations, trees and shrubbery, etc.

(5) The zone of influence shall be defined as an area within the temporary construction easement or public right-of-way as Drawings indicate, or within 35 feet of the proposed Work. The Contractor shall obtain permission from the owners of private property prior to entering private property for the purpose of filming.

(6) The rate of speed in the general direction of travel during the recording shall not exceed 100 feet per minute. Panning rates and zoom-in and zoom-out rates shall be controlled sufficiently such that during playback, the picture shall be in focus and maintain clarity at all times.

(7) Adequate lighting, to produce the proper detail and perspective, will be required to fill in the shadow area caused by trees, structures, utility poles, road signs, and other such objects in residential areas, or as directed by the Owner's Representative.
(8) Engineering station numbers recorded, if applicable, must be continuous, be accurate and correspond to Project stationing. The symbols should be the standard engineering symbols (i.e. 16+64).
(9) All DVDs and cases shall bear labels with the following information:
    a. Disk Number
    b. Owner's Name
    c. Date of Recording
    d. Project Name and Number
    e. Location of Recording

2.2.3 Digital Photography

(1) Photographs shall be captured on digital camera equipment with at least 6-mp memory and delivered on flash drive or portable hard drive. Original digital image files shall have dimensions of 1500 x 2100 pixels or greater and delivered in TIFF format or JPEG format WITHOUT added compression. Each image must be assigned a unique filename that includes the date of photography.
(2) Each digital image file must be delivered with matching descriptive information that accurately describes the direction and location of the individual photograph, plus notation of any noteworthy damage that is not readily visible in the image. This information may not be provided as the (editable) image filename, but must be delivered in a permanent form.
(3) Sufficient digital photographs shall be taken to document existing features such as roadways, sidewalks, fences, curbings, driveways, buildings and structures, ditches, above ground utilities, traffic signal and street light cabinets, landscaping, subdivision monuments, trees, culverts, headwalls, retaining walls, signage and other physical features located within the zone of influence of the construction. Particular and detailed attention shall be given to any defects noted, such as cracks, disturbed areas, damaged items, or as Engineer may direct. The coverage may be expanded if Engineer so directs.
(4) The zone of influence shall be defined as an area within the temporary construction easement or public right-of-way as Drawings indicate, or within 35 feet of the proposed Work. The Contractor shall obtain permission from the owners of private property prior to entering private property for the purpose of taking photographs.
(5) Adequate lighting, to produce the proper detail and perspective, will be required to fill in the shadow area caused by trees, structures, utility poles, road signs, and other such

objects in residential areas, or as directed by the Owner's Representative.

(6) Engineering station numbers recorded (in the image or as a descriptor), if applicable, must be accurate and correspond to Project stationing. The symbols should be the standard engineering symbols (i.e. 16+64).

2.3 MEASUREMENT AND PAYMENT

The Engineer will not measure the specified work for separate payment.

Payment for the audio/video recordings and photographs shall be subsidiary to the other contract items.

3.0 CONSTRUCTION SCHEDULE

3.1 SCOPE

After being awarded the contract, the Contractor shall immediately prepare a Critical Path Method (CPM) schedule for approval by the Engineer that will ensure completion of the project within the contract time. This schedule shall be submitted and approved by the Engineer before a Notice to Proceed is issued. No work on this contract shall begin until said schedule is approved. The Engineer reserves the right to adjust the Contractor's schedule to coordinate with any other projects in the same area.

3.2 GENERAL REQUIREMENTS

A computerized network diagram shall be included in the CPM schedule and shall serve as the 'Master Construction Schedule' for the Project, giving mathematical analysis (printout) of that network, which verifies and validates logic and planning and defines critical path. The approved schedule shall be kept on site with the superintendent and reviewed with Subcontractors each week. The CPM schedule shall be utilized for planning, organizing, and directing the work, for reporting progress, and requesting payment for work completed. The schedule shall be reviewed each week as part of the progress meeting. Abbreviations used in CPM schedules shall be clearly explained in a legend of symbols, either separate or attached.

3.3 SCHEDULE REQUIREMENTS

The CPM schedule shall clearly show sequential interdependencies, with activity duration and float clearly represented. Sequence(s) of activities with no float shall be clearly identified as Critical Path(s). The scheduling system shall be capable of baseline comparison analysis. Upon development and approval of the schedule, the Contractor shall 'freeze' the initial schedule as the baseline schedule. As work progresses, Contractor shall provide graphics displaying actual progress bars versus baseline or target bars. Activity durations shall be in calendar days.

The CPM schedule shall include pre-construction tasks, construction tasks (bid items), shop drawing submittal and approval process, material and equipment ordering and delivery, submittal of as-built drawings, clean up and punchlist, inspection coordination activities, utility relocation, final inspection and certificate

of completion, and final payment. Submittal activities shall be scheduled to allow sufficient time for materials and equipment to be procured and installed, even if the submittal is unacceptable and resubmittal is required. The CPM schedule shall reflect anticipated delays, such as weather delays.

Contractor shall submit the initial schedule, complete revisions, and periodic reports in three hard copies, one reproducible and two prints or plots, and one copy digitally on CD or DVD. This schedule shall include the completed network program consisting of GANTT chart and mathematical analysis within 10 days of the executed contract. Allow 5 days for the Engineer to review. Contractor shall submit the schedule of submittal activities extracted from the master schedule within 10 days after receipt of Notice to Proceed. During the preparation period, Contractor shall review this information with the Engineer.

Submittals to the Engineer of initial and monthly CPM schedule charts shall include three sets of all reports as outlined below. Plots shall be color, blueline, printed or photocopied prints and, if segmentally generated, fully assembled. Highlight the critical path when the critical path is not clearly defined.

The Contractor will participate in the Engineer's review and evaluation of submitted network diagrams and mathematical analysis of diagrams. Resubmit revisions necessary due to review within 5 days after the review. Contractor and major Subcontractors shall review the network CPM schedule before final submittal.

3.4 REPORT FORMATS

Standard set of reports submitted each month including initial submittals shall consist of a GANTT chart of entire project. Progress bar chart shall include target or baseline comparison bars. Bar positions shall be early start/early finish with float clearly defined. GANTT charts shall include a tabulation of each activity. For each activity on the GANTT charts furnish the following:

- Initial/submittal schedule shall include a list of responsible contractors and suppliers, task description, duration, start date, end date, latest start date, latest end date, total slack or float time in calendar days and current schedule bar in Gantt view.

- Progress schedule updates shall include a list of responsible contractors and suppliers, task description, duration, actual start date, actual finish date, percentage completion, remaining duration in calendar days and current schedule bar in Gantt view.

Graphics outlined above shall comply with the following criteria unless noted otherwise:

3.4.1 Sheet size of diagram shall be 11 by 17 inches minimum and time scaled in month as the major timescale and weeks as the minor timescale unless approved otherwise.

3.4.2 On each page include a title block containing the following minimum information;

a. Project Title
b. Project Number
c. Contractor's Business Name
d. Date of Submittal and Revision (The Date shown must clearly show the current preparation date and separately the revision date of the current schedule - this is a hard date entered and not an auto or status date)
e. Submit a separate Legend Page of Symbols and Abbreviations as applicable.

3.4.3 Prepare and submit to the Engineer upon request additional charts, reports, and current digital copy of the project schedule.

3.5 CPM SCHEDULE IMPLEMENTATION AND MOTITORING

Monthly CPM schedule charts and reports shall accompany the Contractor's pay request for work completed. Where the Contractor is shown to be behind schedule, provide accompanying written summary, cause, and explanation of planned remedial action. CPM schedules shall reflect those instances, modifications or other alterations to the schedule, which have an impact on the final completion or interim target dates within the schedule. Payments or portions of payments may be withheld by the Engineer, upon failure to maintain scheduled progress of the work as shown on the approved CPM schedule. Failure to prepare, submit and maintain a CPM schedule as specified shall be cause for rejection of other schedules submitted and for possible delay of payment. Float time belongs to the project, not to the Contractor or to the Engineer, and may be utilized by both parties.

3.6 SCHEDULE CHANGES AND UPDATES

At a minimum the Contractor shall update and submit the CPM Schedule for review weekly. A weekly update is required unless agreed upon by the Engineer. Monthly submittal of the CPM schedule and approval by the Engineer is required prior to payment for work completed. Activities added to the CPM schedule shall be submitted by the Contractor on schedule charts. It is the Engineer's intent that the project be managed and operated according to the CPM schedule. Payment requests may be held up until the CPM schedule is brought back into compliance with the contract documents.

Once the CPM schedule is submitted and approved by the Engineer the Contractor shall identify any modifications to activity durations, logic, values, or descriptions resubmit for approval. Such adjustments shall not impact the contracted completion date.

3.7 MEASUREMENT AND PAYMENT

No measurement or payment will be made for this item. This item shall be subsidiary to other bid items.

JOB SPECIAL PROVISION JSP-0400-02
UTILITY COORDINATION

1.0 UTILITY COORDINATION

1.1 SCOPE

It shall be the duty of the Contractor to notify the serving utility companies of pending construction operations and the schedule of same, prior to any work being done on this project. The utility companies will relocate and adjust their own facilities at no cost to the Contractor, except for sanitary and storm sewers and waterlines. The Contractor shall be responsible for the adjustment and protection of all sanitary and storm sewer facilities. Some minor grading and backfill work may be required of the Contractor at locations of utility adjustments. This work shall be considered subsidiary to other items of work.

The Contractor shall be responsible for holding periodic utility meetings with the City, the Engineer, and utility companies during the relocation of utility lines. The frequency of meetings will initially be bi-weekly (or more frequently if necessary) and then, as relocation work begins to diminish, will be held more infrequently. The Contractor shall keep minutes of the meetings and send copies to all those in attendance.

1.2 STATUS OF UTILITIES

The information below is the latest update for each utility. The utility companies will be invited to the Pre-Bid meeting to give an update on their relocations.

Gas: Spire Gas Main relocation to be completed based on the following location and schedule:

Location: Area near Arbor Rd and Westberry Ln
Schedule: To be completed prior to Notice to Proceed

Water: Missouri American Water Main relocation to be completed based on the following location and schedule:

Location: See plans in bid documents (Section D)
Schedule: To be coordinated by the general contractor with the overall construction schedule

All work for waterline relocation shall be performed utilizing Missouri American Water (MAW) standard specifications (included in the project manual as an appendix) and MAW pre-qualified contractor (Branco Enterprises Inc., Goins Construction LLC, Emery Sapp & Sons, Inc., Kenny Singer Construction Co.).

Electric – Phase 1: Liberty Utilities Overhead Electric (Distribution) relocation to be completed based on the following location and schedule:

Location: From Crane Road to Schifferdecker Road
Schedule: To be completed by July 15, 2021

Electric – Phase 2: Liberty Utilities Overhead Electric (Transmission) relocation to be completed based on the following location and schedule:

Location: Country Club Road and 32nd Street Area
Schedule: In Phase 2 of construction

Phone: AT&T phone relocation to be completed based on the following location and schedule:

Phase 1
Location: Crane to Schifferdecker Road
Schedule: Summer 2021

Phase 2
Location: Crane to Central City including pedestal at Country Club
Schedule: Upon final clearance of Phase 2 right-of-way

Cable/Fiber: Sparklight cable relocation to be completed based on the following location and schedule:

Location: Various locations
Schedule: After Liberty Electric relocation

Fiber: Liberty Connect Fiber relocation to be completed based on the following location and schedule:

Location: Various locations
Schedule: After Liberty Electric Relocation

Southern Star: Southern relocation to be completed based on the following location and schedule:

Location: NW Quadrant of Country Club & 32nd. Southern star will move the existing station north, out of conflict of the roadway.

Schedule: This work is scheduled for March/April of 2022. This is scheduled during potential low-demand timeframe of natural gas. Contractor shall communicate with Southern Star regarding relocation status. Contractor shall work around existing valve station until relocation is completed.

1.3 MEASUREMENT AND PAYMENT

This work shall be considered subsidiary to other items of work. No additional payment will be allowed for delays caused by utility delays. Additional time will be considered for delays caused by utility conflicts that exceed the schedules listed in this special provision.

JOB SPECIAL PROVISION JSP-0400-03
STATUS of RIGHT-OF-WAY

1.0 STATUS OF RIGHT-OF-WAY

1.1 SCOPE

It shall be the duty of the City to obtain the remaining right-of-way for the project prior to the phase or sub-phase of the project when the right of way is required. See plans pages 18 - 20 for project sequencing. The Contractor shall be required to work around and within the available right-of-way per phase. The Contractor may request to vary the phasing from the above reference plan, but the contractor must get approval in writing from the City. The following is a list of parcels that remain to be acquired and their status to date:

Status of Remaining Parcels:

Entering Condemnation Phase:

Phase 1

- Parcels 32 & sewer
- Parcels 31 & 36
- Parcel 58

Under Negotiation

Phase 1

- Parcel 39
- Parcel 59
- Parcel 60
- Parcel 52/53
- Parcel 55
- Parcel 56

Relocation of Resident

Phase 2

Parcel 35

1.2 MEASUREMENT AND PAYMENT

This work shall be considered subsidiary to other items of work.

JOB SPECIAL PROVISION JSP-0400-04
USACE PERMIT COMPLIANCE

1.0 SCOPE

The widening of 32nd Street has been authorized for construction under the nationwide permit number SWL-2021-00069. The contractor shall comply with the conditions outlined in permit SWL-2021-00069. If changes are proposed in the design, a revised set of plans must be submitted to the US Army Corps of Engineers at the following address:

US Army Corps of Engineers, Little Rock
ATTENTION: CESWL-RD
PO Box 867
Little Rock, Arkansas 72203-0867

If the contractor's failure to comply with the conditions of the permit results in shutdown and/or lost working days, additional calendar days will not be awarded. The original calendar completion date will remain in effect regardless of any shutdowns or delays resulting from Contractor's failure to comply with this permit.

Refer to JSP 1100-01 for more information regarding allowable tree removal dates.

2.0 MEASUREMENT AND PAYMENT

This work and requirements shall be considered subsidiary to other items of work.

JOB SPECIAL PROVISION JSP-0400-05
MOBILIZATION

1.0 SCOPE

This item shall consist of the preparatory work and operations, including, but not limited to, those necessary for the movement of personnel, equipment, supplies and incidentals to the project site, and the establishment of all offices, buildings and other facilities necessary for work on the project, except as provided in the contract as separate pay items. This work includes other work and costs incurred before the project starts.

All equipment used by the Contractor having metal tracks shall not be driven over City streets other than those streets being constructed. Such equipment must be transported from one work area to the next work area.

Observe legal load restrictions when operating equipment, hauling equipment, or hauling materials on public roads; newly constructed/reconstructed base, pavement, and structures; and any existing base, pavement or structures that will remain in place. The contractor shall assume responsibility for changes in legal load restrictions that occur after the project was let. Obtain the Engineer's written approval and a special permit to exceed legal load restrictions on the City street system and on newly constructed/reconstructed portions of the project.

Protect roadways and structures within project limits from damage. Observe curing periods before operating equipment or hauling loads on newly constructed pavement, reconstructed pavement, or structures. Do not haul loads of any size on pavement base, except when operations require equipment on pavement base to place material. The Contractor shall assume all responsibility for damages to roadways and structures caused by the Contractor from operating equipment or hauling loads.

2.0 MEASUREMENT AND PAYMENT

Partial payments for "Mobilization" will be at the contract lump sum price in accordance with the following table. The Percent of Original Contract Completed = the amount earned by the Contractor divided by the total dollar value of the original contract (all bid items). The amount earned by the Contractor shall not include monies earned for Mobilization, Contractor Construction Staking, or Stored Materials.

MOBILIZATION PARTIAL PAYMENTS		
Percent of Original Contract Amount Completed	**Pay Lesser of the Two**	
	% of Mobilization	**% of Original Contract Amount**
5	25	2.5
10	50	5
25	60	7.5
50	100	10
Accepted	100	N/A

Nothing herein shall be construed to limit or preclude partial payments otherwise provided by the contract.

JOB SPECIAL PROVISION JSP-0400-06
CONTRACTOR FURNISHED CONSTRUCTION STAKING AND SURVEYING

1.0 SCOPE

This item shall consist of the work required for the Contractor to furnish all construction staking and surveying in accordance with Section 0400.39 of the current approved City of Joplin Standard Specifications.

2.0 MEASUREMENT AND PAYMENT

Partial payments for "Contractor Furnished Construction Staking and Surveying" will be at the contract lump sum price in accordance with the following table. The lump sum price set forth in the bid schedule shall include full compensation for all labor, materials and equipment required to survey, stake, coordinate with contractors, coordination, mileage, expenses, rental fees, permits and all other work items incidental thereto including incidentals necessary to complete the project in accordance with the plans.

CONSTRUCTION STAKING AND SURVEYING PAYMENT SCHEDULE	
Percent of Original Contract Amount Completed	**Percent of Bid Item Paid**
Work Started	25%
5%	40%
25%	60%
50%	80%
70%	95%
All field books, As-Built Construction Plans, and Records have been submitted to the City	100%

Nothing herein shall be construed to limit or preclude partial payments otherwise provided by the contract.

JOB SPECIAL PROVISION JSP-1000-01
EROSION & SEDIMENT CONTROL

1.0 SCOPE

This work shall include all measures necessary including, but not limited to, the installation, maintenance and removal of temporary erosion and pollution control as required during the construction of the project to prevent erosion and pollution on the project in accordance with federal, state, and City of Joplin requirements. The contractor shall utilize and comply with all requirement of the City of Joplin's Land Disturbance Storm Water Pollution Prevention Plan (SWPPP). All erosion and sediment control plans shall be incorporated in the SWPPP. Contractor shall maintain the SWPPP throughout the project and complete the required documentation until the site is stabilized and accepted by the Engineer.

Erosion control plans represent the least possible protection for the project. It is anticipated that additional BMP's will be required to complete the project.

The contractor shall be responsible for all fines associated with failure to comply with the City of Joplin, General Operating Permit, and Land Disturbance Storm Water Pollution Prevention Plan (SWPPP)

2.0 MEASUREMENT

Erosion and Sediment Control BMPs will be measured in accordance with the units listed in the Proposal. Measurement shall occur upon initial installation.

No separate measurement will be made for maintenance, replacement, or removal of Erosion and Sediment Control BMPs.

No separate measurement will be made for compliance with the City of Joplin's SWPPP.

3.0 PAYMENT

The cost of furnishing all labor, equipment, tools, and materials, and the performance of all work necessary to complete erosion and sediment control shall be paid for at the contract unit prices listed in the Proposal. Payment for Erosion and Sediment Control BMPs shall be considered full compensation for a complete and functioning installation, including but not limited to, ongoing maintenance, repair, replacement, and removal upon final stabilization.

Separate payment shall not be made for compliance with the City of Joplin's standard SWPPP. All work required to comply with the City of Joplin's standard SWPPP shall be considered incidental to erosion and sediment control BMP pay items, including but not limited to, all inspections, record keeping, permitting, and documentation and ongoing maintenance and close-out.

JOB SPECIAL PROVISION JSP-1100-01
CLEARING & GRUBBING / TREE & BRUSH REMOVAL

1.0 SCOPE

Clearing, Grubbing, Tree Removal, and Brush Removal shall be in accordance with Section 1100 of the current approved City of Joplin, Standard Specifications, except as modified by this Job Special Provision.

2.0 CONSTRUCTION

Tree & Brush Removal - The contractor shall remove all existing trees and brush (including their stumps) within the limits of construction and which conflict with proposed construction items except those specifically noted to remain. The contractor shall coordinate the removal of these items with the City.

SPECIAL CONDITION – Tree removal for Phase 1.1 and 1.2 of construction shall be completed during the summer/fall of 2021. All remaining phases of construction that require tree removal must be removed between October 15, 2021 and April 1, 2022.

3.0 MEASUREMENT

Clearing shall not be measured separately.

Grubbing shall not be measured separately.

Tree Removal (including stumps) shall not be measured separately but shall be considered part of the Lump Sum pay item ‘Clearing & Grubbing / Tree & Brush Removal’.

Brush Removal (including stumps) shall not be measured separately but shall be considered part of the Lump Sum pay item ‘Clearing & Grubbing / Tree & Brush Removal’.

4.0 PAYMENT

Payment for “Clearing & Grubbing / Tree & Brush Removal” (including the tree’s stumps) shall be at the contract lump sum price and shall include the cost of furnishing all labor, equipment, disposal fees, tools, and materials, and the performance of all work necessary to complete removals.

JOB SPECIAL PROVISION JSP-1100-02
DEMOLITION & REMOVAL

1.0 SCOPE

Demolition & Removal shall be in accordance with Section 1100 of the current approved City of Joplin, Standard Specifications, except as modified by this Job Special Provision.

2.0 MEASUREMENT

No separate measurement will be made for Demolition & Removal.

3.0 PAYMENT

Payment for “Demolition & Removal” shall be at the contract lump sum price and shall include the cost of furnishing all labor, equipment, disposal fees, tools, and materials, and the performance of all work necessary to complete demolition and pavement removal.

JOB SPECIAL PROVISION JSP-1200-01
EMBANKMENT & EMBANKMENT (SPECIAL)(MINIMUM 40% CHERT)

1.0 SCOPE

"Embankment" and "Embankment (Special)" shall be in accordance with Section 1200 of the current approved City of Joplin, Standard Specifications, except as modified by this Job Special Provision.

2.0 MATERIAL

All material shall meet the requirements of Section 1200.2 of the current approved City of Joplin, Standard Specifications.

2.1 EMBANKMENT (SPECIAL)(MINIMUM 40% CHERT)

Clay soils used as structural fill for slopes greater than 3:1 but equal to or less than 2:1 shall have a minimum chert or gravel content of 40 percent retained on the number 4 sieve. If planned embankment soils do not meet this requirement, the clay soils should be mixed with gravel to meet the specified percentage. The gravel material should not contain particle sizes larger than 3 inches.

3.0 CONSTRUCTION REQUIREMENTS

A third-party tester shall verify structural fill used prior to placement and shall be onsite to visually observe material placement. Additional testing shall be completed as needed during construction to verify that the material being placed meets all specifications. The placement and compaction of material shall be done in lifts as indicated in the geotechnical report.

4.0 MEASUREMENT

Measurement shall be in accordance with section 1200.5 of the City of Joplin Standard Specifications, latest edition, with the following modifications:

Measurement for final in-place "Embankment" and "Embankment (Special)" will be made on the basis of final placement, compacted and accepted in place. Measurement will not be made on a "loose material" basis.

Measurement for final in-place "Embankment" and "Embankment (Special)" will not be made until after settlement / consolidation has occurred. Excess material to be used to compensate for settlement / consolidation has not been calculated into the quantity for embankment. Additional material required to compensate for settlement / consolidation will be considered "subsidiary" to respective embankment item. No separate measurement will be made for additional material that must be double-handled, trimmed, and/or removed from the site to correct for settlement / consolidation.

5.0 PAYMENT

Payment for "Embankment" and "Embankment (Special)" shall be at the contract unit price per cubic yard and shall include the cost of furnishing all labor, equipment, tools, and materials, and the performance of all work necessary to haul, place, mix, and compact all material and all other incidental items of work.

JOB SPECIAL PROVISION JSP-1400-01
MoDOT TYPE 5 AGGREGATE BASE

1.0 SCOPE

At the locations shown on the plans, or as determined by the engineer, MoDOT Type 5 Aggregate Base shall be constructed in accordance with the plans and Section 304 of the 2020 Missouri Standard Specifications for Highway Construction except as otherwise modified herein.

2.0 MATERIALS, DEFINITIONS AND EQUIPMENT

All materials shall meet the requirements of Section 304.2 of the 2020 Missouri Standard Specifications for Highway Construction except that reclaimed asphalt or concrete shall not be used in MoDOT Type 5 Aggregate Base.

3.0 CONSTRUCTION DETAILS

Construction of MoDOT Type 5 Aggregate Base shall be in accordance with Section 1400.3 of the current approved City of Joplin, Standard Specifications.

4.0 MEASUREMENT

Final measurement of the completed MoDOT Type 5 Aggregate Base will be made to the nearest square yard. No measurement will be made for MoDOT type 5 aggregate base under driveways, sidewalks, and sidewalk ramps as MoDOT type 5 aggregate base at these locations shall be subsidiary to other bid items.

5.0 PAYMENT

The cost of furnishing all labor, equipment, tools, and materials, and the performance of all work necessary to construct “MoDOT Type 5 Aggregate Base” will be paid for at the contract unit price per square yard of the thickness shown in the contract plans. No payment will be made for MoDOT type 5 aggregate base under driveways, sidewalks, or sidewalk ramps as MoDOT type 5 aggregate base at these locations shall be subsidiary to other bid items.

JOB SPECIAL PROVISION JSP-1400-02
MoDOT TYPE 1 AGGREGATE SURFACE

1.0 SCOPE

At the locations shown on the plans, or as determined by the engineer, the contractor shall furnish, install, maintain, and remove all temporary surfacing material and construct new aggregate surface in accordance with the plans and Section 310 of the 2020 Missouri Standard Specifications for Highway Construction except as otherwise modified herein.

2.0 MATERIALS, DEFINITIONS AND EQUIPMENT

All materials shall meet the requirements of Section 310.2 of the 2020 Missouri Standard Specifications for Highway Construction except that reclaimed concrete shall not be used in MoDOT Type 1 Aggregate Surface.

3.0 CONSTRUCTION DETAILS

Construction of MoDOT Type 1 Aggregate Surface shall be in accordance with Section 1400.3 of the current approved City of Joplin, Standard Specifications.

During construction, material used for temporary surfacing material shall be maintained to provide a smooth driving surface free of bumps and potholes. It shall be the responsibility of the Contractor to make repairs to the temporary surface at the direction of the Engineer. The temporary surfacing material shall be removed as shown in the plans or as directed by the Engineer.

4.0 MEASUREMENT

No separate measurement shall be made for excavation, backfill, compaction, maintenance, and all other materials, labor, and incidentals required to construct the following:

4.1 MoDOT TYPE 1 AGGREGATE SURFACE

Final measurement of the completed MoDOT Type 1 Aggregate Surface will be made to the nearest square yard of final exposed area of completed aggregate surface.

4.2 TEMPORARY MoDOT TYPE 1 AGGREGATE SURFACE

The Engineer will measure temporary surfacing material by the Ton. Temporary surfacing material will be furnished only as needed and as requested/approved by the Engineer.

5.0 PAYMENT

The cost of furnishing all labor, equipment, tools, and materials, and the performance of all work necessary shall be paid for as follows:

5.1 MoDOT TYPE 1 AGGREGATE SURFACE

MoDOT Type 1 Aggregate Surface will be paid for at the contract unit price per square yard of the thickness shown in the contract plans.

5.2 TEMPORARY MoDOT TYPE 1 AGGREGATE SURFACE

Temporary MoDOT Type 1 Aggregate Surface will be paid for at the contract unit price per ton. The payment will be made on the basis of

certified weight tickets issued by the material vendor or by weights obtained from certified public scales or from certified contract or operated scales with all tickets certified by the City of Joplin. Payment shall be considered full compensation for all incidentals, labor, hauling, maintenance of surfacing material to provide an adequate travel path for the public, and removal / restoration of temporary surfacing upon completion.

JOB SPECIAL PROVISION JSP-2300-01
MILLING

1.0 SCOPE

This work shall consist of milling the existing pavement surface to the depth, profile and cross slope shown on the plans, or as directed by the Engineer, and removing and disposing of the milled material. Milling shall be in accordance with Section 622.10 of the 2020 Missouri Standard Specifications for Highway Construction except as otherwise modified herein. Milling shall include both existing asphalt and concrete paved surfaces. It is the contractor's responsibility to determine the quantity of each type of existing pavement prior to submitting a bid for the project.

2.0 MEASUREMENT

Final measurement will not be made except for authorized changes during construction or where appreciable errors are found in the contract quantity. Where required, measurement for removal of the existing pavement surface will be computed to the nearest square yard. The correction will be added to or deducted from the contract quantity. No separate measurement will be made for each type of surface material milled.

3.0 PAYMENT

The accepted quantity of "Milling" will be paid for at the contract unit price per square yard of the thickness indicated. No direct payment will be made for removal of shoulder material by milling or other methods as required to provide drainage in accordance with Sec 622.10.3.5, unless shoulders are to be removed as part of the contract. No direct payment will be made for loading, hauling, stockpiling or disposing of milled material, repairing spalled areas, placing and removing temporary wedges, providing temporary pavement marking or performing other items incidental to completion of this work.

JOB SPECIAL PROVISION JSP-2300-02
SOUTHERN TRAILS MONUMENT SIGNAGE

1.0 SCOPE

This work shall consist of removal of an existing monument sign and construction of a new monument sign to a location indicated in the drawings. This work includes all materials, labor, equipment and any other incidental items required to produce the new monument sign. All work associated with this Job Special Provision shall be in accordance with the current approved City of Joplin, Standard Specifications.

2.0 MATERIALS, DEFINITIONS AND EQUIPMENT

All concrete shall be Class B in accordance with section 3100 of the current approved City of Joplin, Standard Specifications. Salvaged material may be used with Engineer/Owner approval. All materials shall be approved by the Engineer prior to beginning this work.

3.0 CONSTRUCTION DETAILS

Final location of all elements of this work shall be approved by the Engineer and Property Owner prior to beginning this item of work.

4.0 MEASUREMENT

No separate measurement will be made for the bid item Monument Sign. No separate measurement shall be made for excavation, backfill, concrete, lighting / electrical relocations, and all other materials, labor, and incidentals required to construct a completed monument sign.

5.0 PAYMENT

The cost of furnishing all labor, equipment, tools, and materials, and the performance of all work necessary for removal and disposal of existing sign and construction of new monument sign, including all electrical and lighting relocations, shall be paid for as “Southern Trails Monument Signage” at the contract lump sum price.

JOB SPECIAL PROVISION JSP-2300-03
PERMANENT SIGNING

1.0 SCOPE

The Contractor shall furnish and install permanent traffic control signing materials at the locations shown on the plans, in conformance with the details, and the material specifications included herein. Permanent traffic control signing materials shall include, but not be limited to, sign sheeting, aluminum sign blanks, sign posts, breakaway base assemblies, mounting brackets and hardware. The permanent traffic control signing shall be installed before the roadway is open to construction unless prior approval is received by the Engineer or City Inspector. The installation of all regulatory signs is the first priority. If the permanent signs cannot be installed and thus the roadway would be unsigned overnight, temporary regulatory signs shall be installed and remain until the permanent signs can be installed. The contractor shall make every possible effort to remove the temporary signs and install permanent signs within 48 hours. Only under extreme circumstances and at the approval of the signing inspector or the engineer, will the duration of the temporary signs be extended. All temporary and permanent traffic control signs shall be in conformance with the latest edition of the Manual on Uniform Traffic Control Devices (MUTCD) Part II. The temporary signs shall be removed prior to installation of the permanent signs.

1.1 REMOVE & RELOCATE SIGNS

The contractor shall remove and relocate all signs designated on the plans to be relocated on the plans, and as directed by the Engineer.

2.0 MATERIALS

The material for permanent traffic control signs shall be in accordance with this specification.

a. Applicable Documents The following documents form a part of this specification to the extent specified herein:

ASTM B209 Specification for Aluminum and Aluminum Alloy Sheet and Plate
ASTM D523 Standard Method for Test for Specular Gloss
ASTM D4956-09 Standard Specification for Retroreflective Sheeting for Traffic Control
ASTM E284 Terminology of Appearance
ASTM E308 Practice of Computing the Colors of Objects by Using the CIE System
ASTM E810 Test Method for Coefficient of Retroreflection of Retroreflective Sheeting Utilizing the Coplanar Geometry
ASTM E1164 Practice for Obtaining Spectrophotometric Data for Object-Color Evaluation
CIE Publication Number 39-2 Recommendation for Surface Colours for Visual Signaling
FP-03 Standard Specifications for Construction of Roads and Bridges on Federal Highway Projects

2.1 SIGNS

All signing shall conform to MUTCD (most current editions) standards in terms of minimum sign size, color, and reflectivity characteristics.

2.2 SIGN POST

Steel sign posts shall be in accordance with the City of Joplin Standard Detail Sheets ST-18 & ST-19, current edition.

Posts shall be ordered in 2' increments and cut to length. One single sign post long enough to support all signs shall be installed. Two separate lengths of post joined with a sleeve to achieve the necessary post length shall not be allowed.

The breakaway base shall meet the requirements of the City of Joplin Standard Details, current edition.

3.0 MEASUREMENT

For those items on which final payment is based on contract quantities, final measurement will not be made except for authorized changes during construction, or where appreciable errors are found in the contract quantity. The revision or correction will be computed and added to or deducted from the contract quantity.

3.1 REMOVE & RELOCATE SIGNS

No measurement of remove & relocate signs will be made.

3.2 PERMANENT SIGNATE-FLAT SHEET

Measurement of sign areas will be made to the nearest 1/10 square foot for each sign and to the nearest square foot for the total. The area of each sign will be that of the smallest rectangular, triangular or trapezoidal shape that will encompass the sign panel. Contract quantities will be used in final payment.

3.3 STEEL SIGN SUPPORTS

Measurement of post will be per Linear Foot of each type of post support listed in the contract documents, at the final post length as installed.

3.4 SIGN POST FOUNDATIONS, COMBINED

Sign Post Foundations, Combined shall be measured per each sign post foundation installed, regardless of type, and including all excavation, socket, and concrete.

4.0 PAYMENT

The cost of furnishing all labor, equipment, tools, and materials, and the installation shall be paid for as follows:

4.1 REMOVE & RELOCATE SIGNS

Payment of remove and relocate signs will be made by Lump Sum.

4.2 PERMANENT SIGNAGE-FLAT SHEET

Payment of signs will be provided per square foot. No separate payment will be made for any mounting brackets, banding, or miscellaneous hardware.

4.3 STEEL SIGN SUPPORTS

Payment of post will be made per linear foot of each type of post, and at the final post length as installed.

4.4 SIGN POST FOUNDATIONS, COMBINED

Payment of Sign Post Foundations shall be made per each foundation installed and accepted, regardless of post type, and shall be considered full payment for all labor, materials, incidentals, including socket, concrete, and ancillary equipment to install a breakaway post base in accordance with the City of Joplin standard details.

JOB SPECIAL PROVISION JSP-2300-07
ADJUSTMENT OF MANHOLES & VALVES

1.0 SCOPE

This item includes raising or lowering of existing sanitary manholes and utility castings, as required due to construction under this contract. Construction of sanitary sewer manholes, of both brick masonry and concrete type construction, shall be in accordance with the current approved City of Joplin, Standard Specifications.

2.0 MATERIALS

2.1 BRICK

Brick for manholes shall be of uniform texture, and free from lime, gypsum, or other substance which would affect the brick under wet or freezing conditions. Brick shall meet the requirements of ASTM C1272.

2.2 MORTAR

Mortar shall be Type M in accordance with ASTM C270 Table 1 (Masonry cement type only).

2.3 STEPS

The existing steps may be reused except when they have been found to be unacceptable as determined by the Engineer. If required, replacement steps will be Clay & Bailey No. 2102 or approved equal.

3.0 CONSTRUCTION DETAILS

3.1 BRICK MANHOLES

Brick masonry manholes may be adjusted upward to accommodate construction by adding brick to obtain the proper dimension to match finish grade or surface as approved by the owner; adjustments downward will be limited to the removal of courses of brick to the top of the existing manhole cone. When greater adjustments are required, the manholes shall be reconed as indicated in the plans.

3.2 PRECAST CONCRETE MANHOLES

Precast concrete manholes may be adjusted upward by a combination of adding barrel sections and/or a maximum of one foot of concrete riser rings. Adjustments downward may be accomplished by a combination of removing barrel sections and/or a maximum of one foot of concrete riser rings.

All sanitary sewer manhole wall sections to be over 16 foot in depth shall meet the requirements of the City of Joplin for deep manholes. The Contractor shall be responsible for inspection of existing manholes to determine the extent of reconstruction necessary to meet these requirements.

3.3 MAINTENANCE

The Contractor shall be responsible for keeping all debris and waste material out of sewers during manhole adjustments. Should any waste material, debris, earth or other foreign material enter sewers during adjustments or other construction operations, the Contractor shall be responsible for removal of such material and shall maintain sewer flow at all times.

3.4 MANHOLE SPRAYING

All manhole covers shall be sprayed with a releasing agent prior to the overlay by the Contractor. Release agent spraying and asphalt removal around manholes shall be subsidiary to other bid items.

3.5 OVERLAY OPERATIONS

3.5.1 Milling

The Contractor shall mill around all manholes and utility castings within the limits of the specified work. Utility manholes, valves, and castings shall not be cut prior to the street milling. All manholes, valves and castings damaged shall be replaced or corrected as approved by the Engineer at the Contractor's expense. This work shall be subsidiary to other bid items in the Proposal.

3.5.2 Overlay

All utility manholes, valves, and castings located within the paved roadway requiring adjustment shall be raised by the Contractor, prior to the resurfacing operation. Asphalt overlay shall be neatly tapered around the ring of all utility manholes, valves, and castings to conform to the existing grade. The approximate number and method of raising the manholes shall be determined in the field by the Engineer prior to the overlay. The elevation shall be the same as the elevation for the new proposed overlay surface. The area disturbed around the casting shall be maximum of 12 inches. The Contractor shall provide all necessary equipment and material to raise the rings to the required elevations. High early strength concrete shall be placed around the manhole up to the milled surface. Any damage to adjusted utility manholes, valves, and castings shall be the responsibility of the Contractor to repair. All utility manholes, valves, and castings, which require raising prior to overlay, will require hot mix asphalt placed sufficiently around the manhole to prevent damage to vehicles and compacted to 95%. This work shall be subsidiary to other bid items in the proposal.

4.0 MEASUREMENT

Measurement will be made to determine the number of sanitary manholes adjusted. No separate measurement will be made for utility manholes, valves, and castings required for milling and overlay operations.

5.0 PAYMENT

The cost of furnishing all labor, equipment, tools, and materials, and the performance of all work necessary to adjust sanitary manholes shall be paid for as “Adjust Sanitary Sewer Manhole” at the contract unit price per each.

No separate payment will be made for utility manholes, valves, and castings required for milling and overlay operations. This work shall be subsidiary to other items of work.

JOB SPECIAL PROVISION JSP-2303-01
MoDOT ROCK LINING FOR CULVERT OUTLET

1.0 SCOPE

At the locations shown in the contract drawings, or as determined by the engineer, rock lining for culvert outlet shall be constructed in accordance with Section 609 of the 2020 Missouri Standard Specifications for Highway Construction except as otherwise modified herein.

2.0 MATERIALS

All materials shall meet the requirements of Type 2 Rock Blanket in accordance with Section 609.7 of the 2020 Missouri Standard Specifications for Highway Construction except as otherwise modified herein.

3.0 CONSTRUCTION DETAILS

Construction of MoDOT Rock Lining for Culvert Outlet shall be in accordance with Section 609.7 of the 2020 Missouri Standard Specifications for Highway Construction.

4.0 MEASUREMENT

Measurement shall be made to the nearest square yard of completed “MoDOT Rock Lining for Culvert Outlet”, including all variable depths shown on the drawings. No separate measurement will be made for excavation, placement, and all other incidental items as these items are considered subsidiary to the bid item.

5.0 PAYMENT

Payment for “MoDOT Rock Lining for Culvert Outlet” shall be at the contract unit price per square yard of the thickness and type indicated and shall include the cost of furnishing all labor, equipment, tools, materials, and the performance of all work necessary to construct rock lining, complete, including excavation and all incidental items of work.

JOB SPECIAL PROVISION JSP-2303-02
FLEXAMAT

1.0 SCOPE

At the locations shown in the contract drawings, or as determined by the engineer, Flexamat shall be constructed in accordance with this Job Special Provision.

2.0 MATERIALS

The material used shall be Standard Flexamat. All materials shall be approved by the Engineer prior to beginning this work.

3.0 CONSTRUCTION DETAILS

Flexamat shall be installed per the manufacture's specifications.

4.0 MEASUREMENT

"Flexamat" shall be measured to the nearest square yard of placed Flexamat. No separate measurement will be made for excavation, placement, and all other incidental items as these items are considered subsidiary to the bid item.

5.0 PAYMENT

Payment for "Flexamat" shall be at the contract unit price per square yard of the type indicated and shall include the cost of furnishing all labor, equipment, tools, materials, and the performance of all work necessary to install Flexamat, complete, all incidental items of work.

JOB SPECIAL PROVISION JSP-2303-03
RIP-RAP SPLASH PAD

1.0 SCOPE

At the locations shown in the contract drawings, or as determined by the engineer, rip-rap splash pad shall be constructed in accordance with Section 2303 of the current approved City of Joplin, Standard Specifications except as otherwise in this Job Special Provision.

2.0 MATERIALS

All materials shall meet the requirements shown in the contract drawings. All materials shall be approved by the Engineer prior to beginning this work. Rip-rap bedding and woven filter fabric shall be subsidiary to the bid item.

3.0 CONSTRUCTION DETAILS

Construction of rip-rap splash pad shall be in accordance with Section 2303.3 of the current approved City of Joplin, Standard Specifications.

4.0 MEASUREMENT

Measurement shall be made to the nearest square yard of completed “Rip-Rap Splash Pad”. No separate measurement will be made for excavation, placement, and all other incidental items as these items are considered subsidiary to the bid item.

5.0 PAYMENT

Payment for “Rip-Rap Splash Pad” shall be at the contract unit price per square yard and shall include the cost of furnishing all labor, equipment, tools, materials, and the performance of all work necessary to construct splash pad, complete, including cost and placement of woven filter fabric, rip-rap bedding and all incidental items of work.

JOB SPECIAL PROVISION JSP-2307-01
RELOCATE EXISTING POWER SERVICE FOR GATE

1.0 SCOPE

Contractor shall relocate existing pole, light, meter, and disconnect switch to location of the proposed concrete pad. Coordinate relocation with the power company. New location of relocated pole will be coordinated with owner. Contractor shall provide owner minimum of 60 days notice prior to relocation of power service.

2.0 CONSTRUCTION DETAILS

All construction shall meet the requirements of Liberty Utilities.

3.0 MEASUREMENT

No separate measurement will be made for the relocation of the existing power service.

4.0 PAYMENT

Payment for “Relocate Existing Power Service for Gate” shall be at the contract lump sum price and shall include, but not be limited to, the cost of furnishing all labor, equipment, fees, tools, materials, and the performance of all work necessary to complete the relocation of the existing pole, light, meter, and disconnect switch, including coordination with the individual property owners.

JOB SPECIAL PROVISION JSP-3100-01
CONCRETE GUTTER CROSSING WITH INTEGRAL CURB

1.0 SCOPE

Concrete gutter crossing shall be in accordance with Section 3100 of the current approved City of Joplin, Standard Specifications, and except as modified by this Job Special Provision.

2.0 CONSTRUCTION DETAILS

MoDOT Type 5 Aggregate Base shall be constructed under all concrete gutter crossing. An integral curb shall be constructed adjacent to gutter crossing. These items shall be subsidiary to the bid items for concrete gutter crossing construction.

3.0 MEASUREMENT

Concrete gutter crossing shall be measured by the square yard of final exposed area of the entire gutter crossing including to the back of any adjacent curb.

4.0 PAYMENT

Payment for “Concrete Gutter Crossing” shall be at the contract unit price per square yard of the thickness and type indicated and shall include the cost of furnishing all labor, equipment, tools, and materials, and the performance of all work necessary to construct concrete gutter crossing, complete, including adjacent curb and gutter, aggregate base, and all incidental items of work.

JOB SPECIAL PROVISION JSP-3100-02
CURB FLUME & CONCRETE FLUME

1.0 SCOPE
Flume shall be in accordance with Section 3100 of the current approved City of Joplin, Standard Specifications, except as modified by this Job Special Provision.

2.0 CONSTRUCTION DETAILS
MoDOT Type 5 Aggregate Base shall be constructed under all flumes. This item shall be subsidiary to the bid items for flume construction.

The concrete shall not be placed until the subgrade has been inspected for compaction and moisture.

3.0 MEASUREMENT
No separate measurement shall be made for excavation, backfill, aggregate base, and all other materials, labor, and incidentals required to construct the following:

3.1 CURB FLUME (3’ WIDE)
Curb flume shall be measured along the center line of the flume by the linear foot of complete concrete flume.

3.2 CONCRETE FLUME (6’ WIDE)
Concrete flume shall be measured along the center line of the flume by the linear foot of complete concrete flume.

4.0 PAYMENT
The cost of furnishing all labor, equipment, tools, and materials, and the performance of all work necessary to construct complete flume, aggregate base and all incidental items of work shall be paid for as follows:

4.1 CURB FLUME (3’ WIDE)
Payment for “Curb Flume” shall be at the contract unit price per linear foot of the size indicated in the contract documents.

4.2 CONCRETE FLUME (6’ WIDE)
Payment for “Concrete Flume” shall be at the contract unit price per linear foot of the size indicated in the contract documents.

JOB SPECIAL PROVISION JSP-3200-01
CONCRETE CURB & GUTTER

1.0 SCOPE

Concrete curb and gutter shall be in accordance with Section 3200 of the current approved City of Joplin, Standard Specifications, except as modified by this Job Special Provision.

2.0 CONSTRUCTION DETAILS

A slip form curb machine, with electronic control, shall be required on all continuous curb construction of lengths greater than 100 feet.

The concrete shall not be placed until the subgrade has been inspected for compaction and moisture.

3.0 MEASUREMENT

Curb, or curb and gutter shall be measured along the back of curb by the linear foot of completed curb, or curb and gutter, including curb and gutter constructed adjacent to sidewalk ramps.

4.0 PAYMENT

Payment for “Curb”, and “Curb and Gutter” shall be at the contract unit price per linear foot of the type indicated and shall include the cost of furnishing all labor, equipment, tools, and materials, and the performance of all work necessary to construct curb, and curb and gutter, complete, and all incidental items of work.

JOB SPECIAL PROVISION JSP-3300-01
CONCRETE SIDEWALK

1.0 SCOPE

Concrete sidewalks, ramps and landings shall be constructed in accordance with Section 3300 of the current approved City of Joplin, Standard Specifications, and except as modified by this Job Special Provision. All sidewalks, ramps and landings shall be constructed in accordance with the 2010 ADA Standards for Accessible Design and the 2011 Proposed Accessibility Guidelines for Pedestrian Facilities in the Public Right-of-Way.

2.0 CONSTRUCTION DETAILS

MoDOT Type 5 Aggregate Base shall be constructed under all sidewalks, ramps and landings. This item shall be subsidiary to the bid items for sidewalk and ramp construction.

ADA detectable warning surface manufacturer shall be listed in MoDOT Field Section 1067 Table 1. Application Type shall be Cast in Place. The manufacturer of the ADA detectable warning surface shall be capable of providing both rectangular and radius detectable warning panels as shown in the plans. Color shall be determined and approved by the Engineer.

3.0 MEASUREMENT

Sidewalks shall be measured by the square yard of the final exposed area of completed sidewalk.

Ramps and landings shall be measured by the square yard of final exposed area of the entire ramp including detectable warning areas. Blended Transitions shall be measured as ramp.

Landing areas shall be measured as sidewalk construction unless indicated on plans as “RL”, which indicates that it shall be constructed at ramp thickness and will be quantified as sidewalk ramp.

4.0 PAYMENT

Payment for “Sidewalk Construction” and “Sidewalk Ramps” shall be at the contract unit price per square yard of the thickness and type indicated and shall include the cost of furnishing all labor, equipment, tools, and materials, and the performance of all work necessary to construct sidewalk and sidewalk ramps, complete, including detectible warning surface, Type A curb, aggregate base, and all incidental items of work.

JOB SPECIAL PROVISION JSP-3300-02
CAST-IN-PLACE CONCRETE SIDEWALK WALL

1.0 SCOPE

Cast-in-place concrete sidewalk wall shall be constructed at locations shown on the plans, in accordance with details shown on plans, and with Section 3300 of the current approved City of Joplin, Standard Specifications, except as modified by this Job Special Provision.

2.0 MATERIALS

Concrete and reinforcing steel shall be in accordance with Section 3100 of the current approved City of Joplin, Standard Specifications. Concrete shall be Class B.

3.0 CONSTRUCTION

Aggregate Base shall be in accordance with Section 1400.3 of the current approved City of Joplin, Standard Specifications.

Backfill shall meet the requirements of Section 1010 of the 2020 Missouri Standard Specifications for Highway Construction.

4.0 MEASUREMENT

Cast-in-place concrete sidewalk wall shall be measured by the square foot of exposed face of wall from the top of wall to the top of sidewalk. All adjacent sidewalk to be measured as “4” Sidewalk Construction”. Additional thickness and reinforcing shall be considered “subsidiary” to “Cast-in-Place Concrete Wall (Sidewalk)”.

5.0 PAYMENT

Payment for “Cast-in-Place Concrete Wall (Sidewalk)” shall be at the contract unit price per square foot of exposed face of wall and shall include the cost of furnishing all labor, equipment, tools, and materials, and the performance of all work necessary to construct cast-in-place concrete sidewalk wall. No separate payment will be made for reinforcing steel, formwork, curing, backfill, and other incidental items to complete the work as these items are subsidiary to “Cast-in-Place Concrete Wall (Sidewalk)”.

JOB SPECIAL PROVISION JSP-3400-01
DRIVEWAY

1.0 SCOPE

Concrete driveway shall be in accordance with Section 3400 of the current approved City of Joplin, Standard Specifications, and except as modified by this Job Special Provision.

2.0 CONSTRUCTION DETAILS

MoDOT Type 5 Aggregate Base shall be constructed under all driveways. This item shall be subsidiary to the bid items for driveway construction.

3.0 MEASUREMENT

Driveway shall be measured by the square yard of final exposed area of the entire driveway excluding any adjacent curb and gutter. Adjacent curb and gutter will be measured and paid under the bid item “2’-6” Curb & Gutter, Combined (All Types)”.

4.0 PAYMENT

Payment for “Driveway” shall be at the contract unit price per square yard of the thickness and type indicated and shall include the cost of furnishing all labor, equipment, tools, and materials, and the performance of all work necessary to construct driveway, complete, aggregate base, and all incidental items of work.

JOB SPECIAL PROVISION JSP-4100-01
LIFT STATION DECOMMISSION

1.0 SCOPE

The contractor shall decommission the existing lift station once the new sanitary sewer line has been constructed. The City of Joplin will reclaim all lift station equipment to include guide rails. The contractor shall coordinate with the City of Joplin's Chad Copher for equipment pickup. Chad Copher can be reached at (417) 317-1270.

2.0 MEASUREMENT

No separate measurement will be made for lift station decommission.

3.0 PAYMENT

Payment for "Lift Station Decommission" shall be at the contract lump sum price and shall include, but not be limited to, the cost of furnishing all labor, equipment, tools, materials, and the performance of all work necessary to complete the decommission of the lift station, including coordination with the City of Joplin.

JOB SPECIAL PROVISION JSP-4200-01
BOX CULVERT & END SECTIONS

1.0 SCOPE

At the locations shown on the plans, or as determined by the engineer, Reinforced Concrete Box Culvert (RCBC) and RCBC Inlet/Outlet Structures shall be constructed in accordance with the plans and section 703 of the 2020 Missouri Standard Specifications for Highway Construction except as otherwise modified herein.

2.0 MATERIALS

All materials shall meet the requirements of Section 703.2 of the 2020 Missouri Standard Specifications for Highway Construction.

3.0 CONSTRUCTION REQUIREMENTS

Construction of RCBC and RCBC Inlet/Outlet Structures shall be in accordance with Section 703.3 of the 2020 Missouri Standard Specifications for Highway Construction.

4.0 MEASUREMENT

Separate measurement shall not be made for excavation, bedding, backfill, concrete, reinforcing, and all other materials, labor, and incidentals required to construct the following:

4.1 REINFORCED CONCRETE BOX CULVERT

RCBC will be measured by the linear foot of complete box culvert of the size indicated in the contract documents.

4.2 RCBC INLET/OUTLET STRUCTUREs

RCBC Inlet/Outlet Structures will be measured for each structure indicated in the contract documents.

5.0 PAYMENT

The cost of furnishing all labor, equipment, tools, and materials, and the performance of all work necessary shall be paid for as follows:

5.1 REINFORCED CONCRETE BOX CULVERT

RCBC will be paid for at the contract unit price per linear foot.

5.2 RCBC INLET/OUTLET STRUCTURES

RCBC Inlet/Outlet Structures will be paid for at the contract unit price per each of the structures indicated.

JOB SPECIAL PROVISION JSP-4400-01
DROP INLET

1.0 SCOPE

At the locations shown on the plans, or as determined by the engineer, drop inlet shall be installed in accordance with the contract drawings and in accordance with Section 731 of the 2020 Missouri Standard Specifications for Highway Construction except as otherwise modified herein.

2.0 MATERIALS

All material shall meet the requirements of the contract drawings and Section 731 of the 2020 Missouri Standard Specifications for Highway Construction. All materials shall be approved by the Engineer prior to beginning this work.

3.0 CONSTRUCTION REQUIREMENTS

Construction of Precast Drop Inlet (MoDOT Type S-1) shall be in accordance with Section 731.3 of the 2020 Missouri Standard Specifications for Highway Construction.

4.0 MEASUREMENT

Measurement will be made for each drop inlet indicated in the contract documents. No separate measurement will be made for excavation, bedding, backfill, placement, footings, and other incidental items as these items are considered subsidiary to the bid item.

5.0 PAYMENT

The cost of furnishing all labor, equipment, tools, and materials, and the performance of all work necessary to construct “Precast Drop Inlet (MoDOT Type S-1),” complete, including excavation, bedding, backfill, placement, footings, and all incidental work necessary will be paid for at the contract unit price per each indicated on the contract drawings.

JOB SPECIAL PROVISION JSP-4400-02
DRAIN BASIN

1.0 SCOPE

At the locations shown on the plans, or as determined by the engineer, drain basin shall be installed in accordance with the plans and in accordance with Section 4400 of the current approved City of Joplin, Standard Specifications, except as modified by this Job Special Provision.

2.0 MATERIALS

Drain basin shall be Nyloplast drain basin with standard grate. The grate shall be a ductile iron grate and shall be an integral part of the drain basin. All materials shall be approved by the Engineer prior to beginning this work.

3.0 CONSTRUCTION REQUIREMENTS

Drain basin with grate shall be installed per the manufacture's specifications.

4.0 MEASUREMENT

Measurement will be made for each drain basin indicated in the contract documents. No separate measurement will be made for excavation, bedding, backfill, and other incidental items as these items are considered subsidiary to the bid item.

5.0 PAYMENT

The cost of furnishing all labor, equipment, tools, and materials, and the performance of all work necessary to construct "15" Nyloplast Drain Basin," complete, including excavation, bedding, backfill, and all incidental work necessary will be paid for at the contract unit price per each.

JOB SPECIAL PROVISION JSP-5100-01
IRRIGATION SYSTEM

1.0 SCOPE

Existing irrigation system shall be repaired and relocated beyond right of way at locations that conflict with construction. The contractor shall be responsible for any adjustments and relocations that are encountered during the project. The contractor shall coordinate all adjustments with the affected property owners. The following is a list of known adjustments that may be encountered, but additional adjustments may be required as work progresses.

Parcels 8, 49, 59, & 60 – Contractor shall remove and relocate any irrigation systems / equipment encountered within the new right-of-way onto the owner's property.

Parcel 42 – Contractor shall adjust any irrigation systems encountered within the right-of-way to the new grade. Any irrigation systems that conflict with the proposed paving shall be relocated outside the proposed paving but within the existing right-of-way. Contractor shall not encroach or disturb any private property on Parcel 42.

Parcels 44, 47, 52, & 53 – These owners have been compensated for relocation of their irrigation systems as part of right-of-way negotiations. If irrigation systems are encountered within the proposed right-of-way, Contractor shall notify the owner and cut & cap the irrigation system at the proposed right-of-way line.

2.0 MEASUREMENT

No separate measurement will be made for irrigation system. The lump sum price shall include adjustment of all irrigation systems encountered in the project, regardless of whether they are explicitly listed in Section 1 above.

3.0 PAYMENT

Payment for "Irrigation System" shall be at the contract lump sum price and shall include, but not be limited to, the cost of furnishing all labor, equipment, disposal fees, tools, materials, fittings, and irrigation components and the performance of all work necessary to complete an irrigation system, including coordination with the individual property owners.

JOB SPECIAL PROVISION JSP-6700-01
TRAFFIC CONTROL

1.0 GENERAL

This work shall consist of furnishing, installing, operating, maintaining, cleaning, relocating and removing temporary traffic control devices and equipment, and the removal and relocation or covering and uncovering of existing signs and other traffic control devices in accordance with the contract documents or as directed by the engineer. For purposes of this specification, the work zone will be defined as the area between the first and last temporary traffic control device as shown on the plans for the work being performed. The Contractor shall notify enforcement and emergency agencies before the start of construction to request their cooperation and to provide coordination of services when emergencies arise during the construction at the project site. When the contractor completes this notification with enforcement and emergency agencies, a report shall be furnished to the engineer on the status of incident management. The contractor shall refer to Section 2305 of the City of Joplin Standard Specifications, latest edition for additional information.

2.0 MATERIALS

All material shall be in accordance with MoDOT Division 1000, Material Details, and specifically as follows: Item Section Temporary Traffic Control Devices 1063

3.0 SAFETY MATERIALS

All traffic control devices shall be in accordance with the MUTCD and any applicable safety and design codes. The contractor shall furnish a manufacturer's certification of crashworthiness, per NCHRP 350 or AASHTO Manual for Assessing Safety Hardware (MASH) Evaluation Criteria, for FHWA Category 1 traffic control devices and appurtenances. The contractor shall furnish the FHWA acceptance letter for FHWA Category 2 and Category 3 traffic control devices and appurtenances. The FHWA acceptance letter shall indicate that the device and appurtenance comply with the crash test requirements of NCHRP 350 or (MASH), Test Level 3 (TL-3). Regardless of whether the device meets NCHRP 350 or (MASH) criteria, the engineer reserves the right of final approval. Installation of a device prior to the engineer's approval will be at the contractor's risk. The contractor shall: (a) Designate an individual as the Work Zone Specialist (WZS) who is knowledgeable and competent by training and/or certification in the principles of proper temporary traffic control in accordance with Chapter 6 of the MUTCD, at the project level who has the primary responsibility, with sufficient authority, for implementing the traffic management plan and other safety and mobility aspects of the project. The name of the WZS, certification of the WZS’s training, and a 24-hour contact number for the WZS shall be provided to the engineer at the preconstruction meeting. WZS training and/or certification shall be obtained from a qualified person as defined by the Occupational Safety and Health Administration. The WZS shall have a card and/or certificate that includes the WZS’s name, instructor’s name and title, training entity/agency, date, and signature of the instructor. Re-certification will be required a minimum of every four years starting April 2016. (b) Ensure all contractor personnel are trained in traffic control to a level commensurate with their responsibilities. (c) Advise the engineer, as required, at least two working days before any work

requiring a lane closure begins and 14 calendar days prior to the imposition of height, width and weight restrictions. (d) Perform quality control of work zones to promote consistency and ensure compliance with contract documents, policies and guidelines.

4.0 CONSTRUCTION REQUIREMENTS

Performance and operational aspects of the devices shall be in accordance with the latest editions of the MUTCD and the Missouri Quality Standards for Temporary Traffic Control Devices.

All traffic control devices shall be removed as soon as practical when the devices are no longer needed. When work is suspended for short periods of time, traffic control devices that are no longer appropriate shall be turned away from traffic, removed or covered. All temporary traffic control devices shall be removed after the completion of construction and shall remain the property of the contractor unless specified otherwise. All permanent traffic control devices that are in conflict with temporary traffic control devices shall be covered or removed as shown on the plans or as directed by the engineer. Upon completion of the work, all permanent traffic control devices to remain in place shall be restored to original condition.

All sign covers shall meet the requirements of the MoDOT Quality Standards for Temporary Traffic Control Devices

All permanent traffic control devices relocated on a temporary basis shall be moved in the timeframe designated by the engineer, and shall remain visible to the traveling public during all stages of construction. The contractor shall place temporarily relocated permanent traffic control devices in the final location when construction is complete. Damaged devices shall be replaced by the contractor at the contractor’s expense.

The contract will indicate the minimum requirements for traffic control. With the engineer’s approval, the contractor may add to the traffic control plan any temporary traffic control devices or services the contractor considers necessary to adequately protect the public and the work. Device quantities may be adjusted accordingly.

Signs and sign quantities for blasting areas will not be included in the contract traffic control plan. The contractor will be responsible for furnishing, installing, maintaining and removing blasting zone signs in accordance with the MUTCD, at the contractor’s expense. Placement of blasting zone signs will be subject to approval from the engineer.

All changes to the traffic control plan resulting from contractor staging revisions, including proposed total road closures for the contractor’s convenience, shall be submitted in writing to the engineer for review and acceptance prior to implementation. Device quantities may be adjusted accordingly.

If the engineer determines the need for additional traffic control devices not included in the traffic control plan, the contractor will be notified in writing to provide the additional devices. Reimbursement for authorized changes to the

traffic control plan will be made in accordance with the contract documents unless covered by contract unit prices.

The contractor shall monitor traffic flow through the project and verify that all traffic control devices are in place and functioning properly during both daytime and nighttime conditions, as applicable. If the contractor determines that a deficiency in any traffic control device exists, the contractor shall take corrective action. No additional payment will be made for the corrective action.

As soon as possible after observing a traffic control deficiency, the engineer will report the deficiency to the contractor, either verbally or in writing. After receiving notification, if the contractor does not make corrections within an agreed upon timeline, order records or suspension of the work may occur. Regardless of the severity of the deficiency, corrections shall be made as soon as possible to maintain a quality work zone.

The severity of a deficiency will be categorized as follows: (a) Category 1 – Presents an immediate danger to the traveling public or workers and needs to be addressed immediately. (b) Category 2 – The situation doesn't pose an immediate threat to either the public or the workers, but can impact the proper functioning of the work zone. (c) Category 3 – The situation doesn't impact the functioning of the work zone but is more of a maintenance or aesthetic issue.

When the engineer determines that the contractor has not made a good faith effort in correcting a deficiency as agreed upon, an order record will be issued and the contractor will be notified of the following timelines to correct the deficiency. (a) A Category 1 deficiency shall be corrected within one hour. (b) A Category 2 deficiency shall be corrected within 24 hours. (c) A Category 3 deficiency shall be corrected within 96 hours.

When the engineer determines the contractor has not made a good faith effort in complying with an order record issued, the following action may be taken: (a) A second order record will be issued. (b) The engineer may find the contractor in violation of the contract

The contractor shall provide written notice to the engineer of any pedestrian or vehicular accident when physical evidence or other information suggests an accident has occurred in the work zone. The contractor shall obtain and provide to the engineer copies of law enforcement accident reports for any accidents in the work zone.

Each flagger, automated flagger assistance devices (AFAD) operator, portable signal flagging device (PSFD) operator and pilot vehicle operator shall maintain a valid flagger certification card that certifies the individual has been trained by a qualified person as defined by the Occupational Safety and Health Administration, in the principles and procedures of flagging in accordance with Chapter 6 of the MUTCD. Flagger certification cards shall include the flagger's name, instructor's name and title, training entity/agency, date, and signature of the instructor. Flagger certifications shall be provided to the engineer prior to flagging operations. Flagger re-certification shall be required a minimum of every four years starting April 2016. Certifications will not be required in emergency

situations that arise due to actions beyond the contractor's control when flagging is necessary to maintain safe traffic control on a temporary basis. All flagging, AFAD, PFD and pilot vehicle operations shall be in accordance with the MUTCD. Flaggers and pilot vehicles shall be provided as shown on the plans or as approved or directed by the engineer. When not specified in the plans, the contractor may use a Type B (Red/Yellow Lens) AFAD PSFD or pilot vehicle to supplement the flagging operation upon approval from the engineer. When two-way traffic is maintained over a single lane, each flagger, AFAD operator, if used in tandem, and pilot vehicle operator involved in the traffic flagging operation shall be equipped with a portable, two-way, communication system approved by the engineer. When the AFED or PSFD are not in use they shall be removed from the roadside.

5.0 FLASHING ARROW PANEL

The contractor shall deploy, operate and maintain flashing arrow panels as specified on the plans for the duration of the project, in accordance with the manufacturer's recommendations, at the contractor's expense. A minimum vertical clearance of 7 feet shall be maintained from the edge of pavement to the bottom of the flashing arrow panel.

When not in use, trailer-mounted flashing arrow panels shall be stored in an appropriate manner.

Control programs shall be as follows: (a) Flashing Caution: Flash the two highest and two lowest lamps on panel simultaneously. (b) Alternating Diamond Caution: Flash eight lamps in a form of a diamond and alternates diamonds from left side to right side. (c) Flashing Left or Right Arrow: Flash five lamps in the arrowhead and five lamps in the horizontal shank simultaneously. (d) Sequential Arrow Left or Right Arrow: Five lamps in the arrowhead will move across the panel. The horizontal shank increases in length as the arrowhead moves across the panel. (e) Double Arrow: Flash five lamps in both the left and right arrowheads and three lamps in the horizontal shank simultaneously. The contractor has the option to use the sequential arrow or alternating diamond caution modes on mobile operations.

6.0 CHANGEABLE MESSAGE SIGNS

The contractor shall place the changeable message sign (CMS) at the location shown on the plans or as directed by the engineer. The CMS shall not be located in the median.

The contractor shall deploy, operate and maintain the CMS a minimum of two weeks prior to construction starting as specified below:

- Southbound on Central City Road north of 20th Street
- Westbound on 32nd Street east of Main Street

Final CMS locations shall be coordinated and approved by the engineer prior to placement. The contractor shall coordinate program messaging of the CMS with the engineer. CMS installation shall be in accordance with the manufacturer's recommendations.

When the CMS is not in use, the message board shall be turned away from traffic. When not required for longer than a 24-hour period, the CMS shall be stored in an appropriate manner.

7.0 MEASUREMENT

Traffic Control items will be measured per the maximum number of devices used on the job at any period of construction following the phasing provided in the plans. The Contractor shall fully complete one phase of work prior to set-up of subsequent phases. Channelizers, Type III Barricades, Flashing Arrow Panels, Changeable Message Signs, Short-Term Marking Arrows, and Temporary Flagger Control will be measured per each device listed in the plans. Removable Marking Tape will be measured by linear foot of materials placed. Construction signing will be measured by total square footage of signs used at one time.

8.0 PAYMENT

All temporary traffic control devices authorized for installation by the engineer will be paid for at the contract unit price for each of the pay items included in the method of measurement. No direct payment will be made for the following:

(a) Incidental items necessary to complete the work, unless specifically provided as a pay item in the contract.

(b) Installing, operating, maintaining, cleaning, repairing, removing or replacing traffic control devices.

(c) Covering and uncovering existing signs and other traffic control devices.

(d) Relocating temporary traffic control devices including temporary construction signs, ADA Barricades, Type III Moveable Barricades, Channelizers, Flashing Arrow Panels, Signal Heads at temporary traffic signals, and permanent traffic control devices temporarily relocated, unless specifically included as a pay item in the contract.

(e) Worker apparel.

(f) Flaggers, AFADs, PFDs, pilot vehicles, and appurtenances at flagging stations.

(g) Furnishing, installing, operating, maintaining and removing construction-related vehicle and equipment lighting.

(h) Construction and removal of temporary equipment crossovers, including restoring pre-existing crossovers.

JOB SPECIAL PROVISION JSP-9000-01
TRAFFIC SIGNAL MODIFICATIONS

1.0 SCOPE

The contractor shall be responsible for any adjustments and/or modifications required to complete all work stated on sheet C62 of the contract drawings. All work shall be in accordance with the contract drawings, and Section 9100 of the current approved City of Joplin, Standard Specifications, except as modified by this Job Special Provision.

2.0 MATERIAL

Contractor shall provide all materials listed below but are not limited to:

Materials	Unit	Quantity
KR10-12 Street Sign	Each	4
Flashing Yellow Arrow Signal Head	Each	4
Detector Card	Each	As needed
Load Switch	Each	As needed
Flash Transfer – Relay Equipment	Each	As needed

All materials shall meet the requirements of Section 9100 of the current approved City of Joplin, Standard Specifications. All materials shall be approved by the Engineer prior to beginning this work.

3.0 MEASUREMENT

No separate measurement will be made for traffic signal modification.

4.0 PAYMENT

Payment for “Traffic Signal Modification” shall be at the contract lump sum price and shall include, but not be limited to, the cost of furnishing all labor, equipment, disposal fees, tools, materials, and the performance of all work necessary to complete the traffic signal modification.

JOB SPECIAL PROVISION JSP-9000-02
FIBER OPTIC

1.0 SCOPE
All work shall be in accordance with the contract drawings, and Section 9100 of the current approved City of Joplin, Standard Specifications, except as modified by this Job Special Provision.

2.0 CONSTRUCTION DETAILS
All construction shall meet the requirements of the contract drawings and Section 9100 of the current approved City of Joplin, Standard Specifications, except as modified by this Job Special Provision.

3.0 MEASUREMENT

3.1 CONDUIT
Conduit shall be measured by the linear foot at locations indicated in the contract documents. No separate measurement will be made for trenching, backfill, boring, or other methods of trenchless installation as these items are subsidiary to the bid item “3" Schedule 40 HDPE Conduit w/ Pull String (incl. Boring or Trenching) (Fiber Optic)”.

3.2 PULL BOX
Pull box shall be measured by each pull box indicated in the contract documents.

3.3 TRACER WIRE
Tracer wire shall be measured by the linear foot at locations indicated in the contract documents.

4.0 PAYMENT
The cost of furnishing all labor, equipment, tools, and materials, and the performance of all work necessary to install complete conduit, pull box, and tracer wire and all incidental items of work shall be paid for as follows:

4.1 CONDUIT
Payment for “3" Schedule 40 HDPE Conduit w/ Pull String (incl. Boring or Trenching) (Fiber Optic)” shall be at the contract unit price per linear foot at locations indicated in the contract documents.

4.2 PULL BOX
Payment for “Type II Fiber Optic Pull Box” shall be at the contract unit price per each item indicated in the contract documents.

4.3 TRACER WIRE
Payment for “1-1c 10 Tracer Wire” shall be at the contract unit price per linear foot at locations indicated in the contract documents.

APPENDIX B:

STORM WATER POLLUTION PREVENTION PLAN

LAND DISTURBANCE
STORM WATER POLLUTION
PREVENTION PLAN
(SWPPP)

FOR
EARTHWORK CONSTRUCTION OF:

CITY OF JOPLIN
JOPLIN, MISSOURI

Prepared for:
CITY OF JOPLIN, MISSOURI

Original SWPPP Template Prepared
July 2009

Original SWPPP Template Prepared by:
ALLGEIER, MARTIN and ASSOCIATES, INC.
Consulting Engineers
Joplin, Missouri

LAND DISTURBANCE
STORM WATER POLLUTION
PREVENTION PLAN
(SWPPP)
FOR CONSTRUCTION OF:

Prepared for

CITY OF JOPLIN, MISSOURI

Original SWPPP Template Prepared
July 2009

Original SWPPP Template Prepared by

ALLGEIER, MARTIN and ASSOCIATES, INC.
Consulting Engineers
Joplin, Missouri

STORM WATER POLLUTION PREVENTION PLAN
(SWPPP)
FOR
LAND DISTURBANCE CONSTRUCTION OF:

_____

FOR THE
CITY OF JOPLIN
JASPER/NEWTON COUNTY
JOPLIN, MISSOURI

I. SITE DESCRIPTION

Project Location – The project location governed by this SWPPP is: Approximately the public right of way of 32ND Street, between Central City Road and Schifferdecker Avenue
Located in the City of Joplin, Missouri. The number and location of outfalls are: Refer to plans for outfalls

The receiving stream/streams are: Unnamed tributary to Shoal Creek

Project Owner – CITY OF JOPLIN
602 S Main Street
Joplin, Missouri, 64801

Site Area = The total project area is comprised of approximately 23.0 acres.

Proposed disturbed area = Approximately 9.5 acres.

Site Runoff Coefficients, C
Prior to Proposed Construction & Improvements = 0.50
Estimated Weighted Average After Improvements = 0.50

The site earthwork construction activities for the 32ND Street Reconstruction Project project will consist of: mill and overlay roadways, sidewalk construction. drives and alleys and storm sewer replacement regrading

Final grading and the preparation of the seedbed for vegetative restoration will follow these activities.

Prior to, and/or in conjunction with, the establishment of the construction site entrance and access roads will be the placement of the filter fabric silt fencing and/or straw bale barriers (as required) down gradient of those areas of vegetation and root zone disturbance activities. In addition, any areas of the site that pose a potential for off-site migration of sediment shall be protected with whatever means necessary to prevent sediment from leaving the site, as site-specific conditions may require. Inspection and maintenance of the filter fabric silt fences, any straw bale barriers and /or straw wattles, vegetated buffer areas, and any other Best Management Practices (BMPs) shall continue throughout the term of the project until a permanent vegetative cover is re-established (as defined) and the Notice of Termination (NOT) of the permit is received from the Missouri Department of Natural Resources (MDNR). Care shall be exercised to limit the disturbance of current vegetated areas to the smallest amount possible for the planned development of the site.

II. SEQUENCE OF CONSTRUCTION ACTIVITIES

The area of the proposed project will be excavated, graded, and constructed, per the plans and specifications. Prior to the initial soil disturbance activities, the installation of the temporary BMPs including installation of the filter fabric silt fencing, and any straw bale barriers (as may be required), will be installed at the location shown on the SWPPP drawing prior to major soil disturbance activities for storm water runoff sediment control, and to retain sediment on the site and out of the drainage structures and streams. Additional Temporary BMPs shall be installed, including, but not limited to, additional silt fencing, straw bale barriers and/or straw wattles, or possible check dams as site-specific conditions may require.

The proposed general sequence of construction activities for the project is as follows:

1. Establish the construction entrance/exit drive at the site with the location(s) to be determined by the contractor. Stabilize and maintain the construction entrance/exit drive with a minimum 50 ft long, minimum 6" thick layer of 3" to 5" clean, washed and graded, crushed rock, placed over a geotextile filter material, for control of vehicle tracking of sediments off-site and on to the public roadways as shown on the SWPPP drawing.

2. Removal of any trees as needed for the earthwork construction activities. Soil disturbances shall be minimized during this process.

3. Placement of filter fabric silt fencing, and/or straw bale barriers/straw wattles, as required, at the locations shown on the SWPPP drawing, and any other additional areas where site conditions may require to prevent erosion and sediment losses with storm water runoff from the site during the earthwork activities. Installation of these items shall be accomplished prior to, and during the turf and soil disruptions caused by the excavation, filling, grading and construction activities.

4. Clear and grub all areas as required for the earthwork construction of the site in preparation for the project, as shown on the construction drawings. Existing vegetation will be preserved wherever practical. Filter fabric silt fencing shall be installed at the locations shown on the SWPPP drawing prior to the initiation of earthwork construction of the site.

5. Project Construction.

6. Following seedbed preparation of disturbed areas, apply seed, fertilize, mulch, etc. in areas where final construction has been completed, and maintain until permanent vegetation is re-established per this SWPPP, and in compliance with the conditions of the Storm Water Discharge General Permit issued by the MDNR.

7. Temporary seeding and mulching of disturbed areas shall be performed, as necessary, to prevent erosion and sediment loss during the construction activities prior to permanent seeding of the disturbed areas.

All additional construction activities to be completed during this project are as follows:

_____

_____

_____

_____

_____

Best Management Practices (BMPs) including establishment of the rock stabilized construction equipment entrance/exit, placement of filter fabric silt fence, any straw bale silt barriers, temporary seeding and any other measures to prevent erosion of the soils and sediment movement off-site shall be implemented prior to the land disturbance activities. Inspection, maintenance, repair, and upkeep of all BMPs throughout the construction project to achieve compliance with the conditions of the National Pollutant Discharge Elimination System (NPDES) Storm Water Discharge Permit issued by the MDNR, and this SWPPP is, and will be, considered a major concern and part of the project. All conditions of the NPDES permit and this SWPPP shall be strictly adhered to throughout the project, as required.

III. POLLUTION CONTROL – BEST MANAGEMENT PRACTICES (BMPs)

1. Erosion and Sediment Abatement Control

A. Soil Stabilization Practices

1) Temporary Practices: Topsoil stockpiles and areas of the site where daily construction activities will temporarily cease for longer than 21 days will be stabilized using silt fencing, or covered to prevent erosion within 14 days. The contractor shall cause the location of topsoil stockpile to be noted and indicated on the SWPPP drawing.

2) Permanent Restoration: Disturbed portions of the site area affected by the construction shall be seeded for permanent vegetative restoration of turf per the contract plans and specifications or this SWPPP. All areas disturbed during construction shall be fertilized, seeded, and mulched.

Seeding/Fertilizer/Mulch – Light disking or other similar means shall properly prepare seedbeds. Disturbed portions of the site area affected by the improvements shall be seeded for vegetative restoration of turf per the specifications, or as follows. All areas disturbed during construction shall be fertilized, seeded, and mulched. Seed shall be as called for in the specifications, or a mixture of eighty percent (80%) K31 Fescue, fifteen percent (15%) Korean Lespedeza, and five percent (5%) wheat by weight applied at the rate of 130 pounds of seed mix per acre. Seed shall be applied by drilling or by broadcast application. Broadcast applications shall be lightly disked and rolled immediately following application of the seed. In either method, the seed shall be planted to the proper depth. Fertilizer shall be as called for in the specifications, or a commercial fertilizer, having an analysis of 12-12-12 (12 percent nitrogen, 12 percent phosphorous, and 12 percent potassium). Fertilizer shall be applied evenly and incorporated into the soil at the rate as called for in the specifications, or 20 pounds per 1,000 square feet, or per the manufactures instructions. The vegetative mulch shall be the cereal straw from oats, rye, wheat, or barley. The straw shall be free of prohibited weed seeds, as applicable under state seed law, and shall be relatively free of other noxious and undesirable seeds. The straw shall be clean and bright, relatively free of foreign material and applied at the rate of 2-1/2 tons per acre, or as called for in the specifications. The operation of seeding and mulch cover placement shall be accomplished not later than 14 days from the date final construction activities cease.

Erosion Control Mat – Biodegradable erosion control mats shall be installed (as needed) along steeper slopes, bottom of ditches, and elsewhere if shown on the SWPPP drawing and/or as needed, or as directed by the Resident Project Representative in accordance with the manufacturer's instructions. The mats shall be constructed with straw or recycled cellulose products and strengthened with a netting of polypropylene or natural fibers. Mats shall have a recommended life of at least ten months. Contractor shall apply fresh seed at above stated fescue seed mix rate prior to placement of the erosion control mats.

Slopes and seedbed areas shall be properly prepared, fertilized and seeded prior to installation of the mats. Mats shall be anchored with hardwood or biodegradable pins in accordance with the manufacturer's recommendations. (* Staple Pattern B minimum) Metal pins are not acceptable and shall not be used.

Erosion control mats shall be S150BN manufactured by North American Green or an approved equal.

B. Structural Element Practices

1) Filter Fabric Silt Fence: Temporary filter fabric silt fencing shall be installed along and downgradient of the disturbed areas as shown on the SWPPP drawing and in additional areas as needed, prior to and in conjunction with the construction of the improvements. The placement of the silt fencing shall be effective in the prevention of major sediment movement from the site. All filter fabric silt fencing shall be maintained throughout the construction and until final vegetation is restored, and Notice of Termination of the permit is received.

2) Straw Bale Barrier: Temporary straw bale barriers shall be strategically placed at the site as shown on the SWPPP drawing and at additional locations as necessary according to site specific terrain requirements, as a control measure to contain and prevent major sediment runoff from the project site as needed.

3) The construction entrance/exit drive shall be rock stabilized with a minimum 6" thick, 3" to 5" crushed rock over a geotextile filter material to prevent construction vehicles from transporting, tracking and/or dropping mud and/or sediment onto the public road as needed. Any and all other established entrance/exit roads on/site shall be kept clear and clean of any and all sediment to prevent tracking to public roads. This may require daily sweeping.

A descriptive reference for the proper installation of the filter fabric silt fences, straw bale barriers, and the construction entrance/exit is provided in the Appendices and on the drawing of this SWPPP.

2. Waste Disposal

A. Construction Waste/Trash/Solid Waste – Any and all waste materials (except hazardous waste–see paragraph III.2.B. below) generated during the project will be collected as needed and removed from the site daily or placed and stored in a metal dumpster rented from a solid waste management company licensed to operate in the City of Joplin or owned by the contractor or the owner. The dumpster(s) shall meet all local and State solid waste management regulations. The contractor shall cause the location of solid waste containers placed on the site to be noted and indicated on the SWPPP drawing. All trash and construction debris from the site will be deposited in the dumpster(s) as appropriate. The dumpster(s) will be emptied approximately once per week, or more often if necessary. No construction waste materials will be buried on site. All brush, trees and refuse shall be removed or disposed of by burning (if permitted). Open burning of tree trunks, tree limbs, and vegetation from land clearing operations is allowed only in the outstate area of Missouri if the burning takes place outside the city limits of any incorporated area or municipality. Materials such as tires or waste oil may not be used to start the fires or be burned in the fires. Missouri State Regulations prohibit open burning of any waste generated by a business, trade, industry, or any demolition operation including, but not limited to paper, cardboard boxes, pallets, tires, rubber products, hazardous materials, styrofoam, plastics, petroleum products, treated wood and any asbestos-containing material. Any burning operations shall be in strict compliance with the requirements of all applicable statutes and regulations. Prior to conducting any open burning, the contractor shall contact the appropriate city or county of jurisdiction for any local restrictions or permit requirements. Burning operations shall not constitute a nuisance to persons living nearby, shall be kept away from all property lines and at least 200 yards from the nearest inhabited dwelling, as well as transmission and distribution lines and shall be carefully controlled to prevent any damage to adjacent properties and facilities. Burn pit refuse shall be cleaned out and disposed of off-site. All personnel will be instructed regarding the correct procedure for waste disposal. Notices stating these practices will be posted on site, as necessary. The contractor shall cause any and all burning locations to be shown on the SWPPP drawing.

B. Hazardous Waste – Any and all hazardous waste materials will be disposed of in the manner specified by local, state and/or federal regulations, or per instructions by the manufacturer. Site personnel will be instructed in these practices, and the individual who manages day-to-day site operations will be responsible for seeing that these practices are followed.

C. Sanitary Waste – The General Contractor is responsible for providing sanitary facilities on the site, as needed, should use of any permanent facilities not be available. The contractor shall cause the location of portable toilet facilities placed on the site to be noted and indicated on the SWPPP drawing. All sanitary waste will be collected from the portable units (if provided) a minimum of one time per week (or as needed) by a licensed sanitary waste management contractor, or as required by local regulation and disposed of only in locations having a State permit.

3. Offsite Vehicle Tracking

A stabilized construction site entrance/exit will be established and maintained to help reduce tracking of any sediment off-site and onto the adjacent and adjoining roadways. Care shall be taken to ensure that adequate rock aggregate is in place at all times at the entrance to minimize offsite tracking as discussed above in Section III.1.B.3 of this SWPPP.

IV. MAINTENANCE/INSPECTION PROCEDURES

1. Inspection Schedule

A. All control measures **SHALL** be inspected at least once a week, or as required by the issued storm water discharge permit, prior to a known major storm event, and within a reasonable time, not to exceed 24 hours, following any storm event of 0.5 inches or greater. The contractor is responsible for completing all inspection and maintenance forms, and providing same to the owner.

2. Maintenance of Sediment Control Measures

A. All storm water runoff sediment control measures will be maintained in good working order. Maintenance and repair (if necessary) shall be initiated within 24 hours of being reported.

B. Sediment built up shall be removed from the filter fabric silt fence barriers when it has reached one-third the height of the barrier or sooner.

C. All filter fabric silt fences will be inspected for depth of sediment and for fabric tears and to ensure the fabric is securely attached to the fence posts, and that the fence posts are firmly in the ground.

D. Any and all earthen berms and sedimentation basin dams shall be inspected for damage and erosion and repaired if necessary.

E. Any and all vegetation/rock check dams shall be replenished or replaced when the void space has become filled with silt and sediment to the point it is no longer functional.

F. Straw bales shall be inspected for damage and anchor integrity and replaced and/or re-anchored, if necessary. Sediment built up shall be removed from the straw bale barriers when it has reached one-third the height of the barrier or sooner, as required.

G. All temporary seeding shall be inspected for bare spots, washouts, and healthy growth. Re-seeding will be accomplished as necessary.

H. A maintenance inspection report shall be completed during each inspection. A copy of the inspection and report forms to be completed by the inspector is included in the Appendix.

I. The contractor will be responsible for inspections, completion of the inspection and maintenance reports, and all maintenance and repair activities. The contractor shall provide the owner with copies of all required reports in a timely manner.

J. The contractor shall name an individual as the Environmental Manager for the site for inspection and maintenance responsibilities. The individual shall be trained and knowledgeable in all the inspection and maintenance practices necessary for keeping the erosion and sediment controls (BMPs) used on the site in good working order. The contractor shall cause the name of the Environmental Manager to be to be noted and indicated in the space provided on the SWPPP drawing.

3. Non-Storm Water Discharges

A. It is expected the following non-storm water discharges may occur from the site.

1) Wash waters from construction equipment and finished pavement (where no spills or leaks of toxic or hazardous materials have occurred.)
2) Water sprinkling for dust control.

V. SPILL PREVENTION - SITE MANAGEMENT BMPs/MMPs

The following are the material management practices (MMPs) that will be used to reduce the risk of spills or other accidental exposure of materials and substances to storm water runoff.

1. Good Housekeeping Practices

A. The contractor shall make a concerted effort to store only enough of each product on site required to do the job. The contractor shall cause the location of storage areas on the site to be noted and indicated on the SWPPP drawing.

B. Any and all materials stored on site will be stored in a neat, orderly manner in their appropriate containers and, if possible, under a cover or other enclosure for protection from precipitation and located away from drainage courses and low areas.

C. Any and all materials and products will be stored and maintained in their original containers with the original manufacturer's label.

D. Substances will not be mixed with one another unless recommended by the manufacturer.

E. Whenever possible, all of a product will be used up before disposing of the container.

F. Manufacturers' recommendations for proper use and disposal will be followed at all times for all materials and products.

G. The contractors' site superintendent, or his designated appointee, will visually inspect the job site daily to ensure proper use and/or disposal of all materials on site.

2. Hazardous Products - Storage, Handling, Use, & Disposal Practices

The contractor shall cause the location of any and all hazardous materials/hazardous products placed on the site to be noted and indicated on the SWPPP drawing. These practices are used to reduce the risks associated with hazardous materials:

A. Any and all products will be kept in original containers unless they are not re-sealable. Otherwise they should be transferred to re-sealable containers for storage and properly marked, indicating the contents.

B. Original labels and material safety data sheets (MSDSs) will be retained on site, as they contain important product information.

C. If surplus product must be disposed of, manufacturers' and local, state and/or federal recommended methods for proper disposal will be followed.

D. Fuels, oils, lubricants, solvents, or other hazardous materials shall NOT be disposed of on the site. All hazardous material must be properly stored, used and disposed in accordance with State and Federal laws and regulations. Drip pans will be provided for any valves on storage containers, as appropriate. For further guidance, contact MDNR at 1-800-361-4827.

3. Product Specific Practices

The following product specific practices will be followed on site:

A. Petroleum Products - All on-site vehicles and equipment will be monitored for leaks, and will receive regular preventive maintenance to reduce the chance of leakage. Any and all petroleum products on site will be stored in tightly sealed containers that are clearly labeled and provided with drip pans, if appropriate. Any asphalt substances used on site will be applied according to the manufacturer's recommendations. Any fuel storage tanks located on-site shall be provided with adequate secondary containment. Drip pans will be provided for all valves. If greater than 1320 gallons of oil is stored on the site, the contractor is responsible for providing and maintaining a SPCC (Spill Prevention, Control, and Countermeasures) plan on site. The contractor shall cause the location of any petroleum product storage areas on the site to be noted and indicated on the SWPPP drawing.

B. Fertilizers - Fertilizers will be applied only in the minimum amounts previously stated. Once applied, fertilizer will be worked into the soil to limit exposure to storm water. Storage of fertilized will be inside or under cover. The contents of any partially used bags of fertilizer will be transferred to a properly labeled, sealable plastic bin or container to avoid spills. The contractor shall cause the location of any fertilizer product storage area on the site to be noted and indicated on the SWPPP drawing.

C. Paints/Solvents/Cleaning Compounds, Etc. - All containers will be tightly sealed and stored when not required for use. Drip pans will be provided, if appropriate. Excess materials will NOT be disposed or dumped on site, but will be properly disposed of according to manufacturer's instructions and/or Federal, State, and local regulations. The contractor shall cause the location of any paints/solvents/cleaning compounds, etc. storage areas on the site to be noted and indicated on the SWPPP drawing.

D. Concrete Trucks - Concrete trucks shall be allowed to wash out only in locations where the discharge will remain on-site, and in a manner that prevents contact with storm water runoff. It is not permissible to discharge concrete truck washout directly to streams or storm drains.

E. Mud/Sediment Offsite Tracking - Only the designated entrance(s) shall be used for contractor access to, and exit from, the site. The General Contractor will be responsible for keeping all mud and off-site tracking cleaned from the adjoining public road, on a daily basis if needed.

4. Spill Control Practices

The contractor is responsible for providing and maintaining a SPCC (Spill Prevention Control and Countermeasures) plan on site, as required by the regulations at 40 CFR 112. In addition to the good housekeeping and material management practices discussed in the previous sections of this plan, the following practices will be followed for spill prevention and cleanup:

A. Manufacturer's recommended methods for spill cleanup will be clearly posted, and site personnel will be made aware of the procedures and the location of the information and cleanup supplies. Refer to manufacturer's MSDSs.

B. Materials and equipment necessary for spill cleanup will be kept in a designated material storage area on site. The contractor shall cause the location of the spill clean up materials and equipment to be noted and indicated on the SWPPP drawing. Spill cleanup equipment and materials will include, but not be limited to, shovels, brooms, dust pans, mops, rags, gloves, goggles, kitty litter, sand, sawdust, and plastic and/or metal trash containers specifically for this purpose, as applicable.

C. All spills will be cleaned up immediately after discovery and properly containerized for proper disposal. Burial on site is not acceptable and shall not be allowed.

D. The spill area will be kept well ventilated and personnel will wear appropriate protective clothing to prevent injury from contact with a hazardous substance.

E. Reportable quantities for spills of toxic or hazardous material will be promptly reported to the appropriate Federal, State and local government agencies, as required, including the McDonald County Local Emergency Planning Committee (LEPC) and others listed on the enclosed "Spill/Release Information and Reporting Form". Reportable quantities for oil and hazardous substances are found at 40 CFR 110, 117, and 302, and as stated in the Appendix of this plan. When permits are applicable, the permittee or his/her authorized representative is required to notify the MDNR Environmental Emergency Response in accordance with 40 CFR 117 and 40 CFR 302 as soon as they have knowledge of the discharge of any hazardous substance or petroleum product in excess of the reportable quantity. The MDNR emergency spills hot line is 1-573-634-2436. Copies of any and all reporting forms shall be provided to the owner of the project as soon as is practical.

F. The spill prevention, control and countermeasures plan and/or practices will be adjusted to include measures to prevent a spill event of this type from recurring, and how to clean up the spill if there is another one. A description of the spill, what caused it, and the cleanup measures taken will also be included.

G. The Environmental Manager will also be the spill prevention and cleanup coordinator unless the contractor arranges otherwise. He will designate other site personnel who will receive spill prevention and cleanup training, as required. The names of responsible spill personnel will be posted in the material storage area and in the office trailer on site, if one so exists.

VI. AIR EMISSIONS

1. Burning: Any burning on the site may require a permit from the MDNR. For guidance, contact the MDNR Southwest Regional Office in Springfield at (417) 891-4300 or the MDNR Air Pollution Control Program, Jefferson City at (573) 751-4817. County and/or city ordinances may also apply. It is the responsibility of the contractor to contact these governing bodies for guidance. Refer to Section III.2.A of this SWPPP for additional information relative to open burning at the site. An MDNR fact sheet relative to open burning is included in the Appendix.

2. Dust Control: The contractor is required by State law to control fugitive dust blown from the site. Dust can be minimized by stabilizing areas with mulch as soon as possible. Watering should be provided in unstabilized areas as needed for dust control. Contact MDNR for guidance, as needed, at the numbers listed above.

VII. AMENDING THE STORM WATER POLLUTION PREVENTION PLAN (SWPPP)

The permittee, CITY OF JOPLIN, and the Contractor shall amend and update the SWPPP, as appropriate, during the term of the land disturbance activities. The permittee/contractor shall amend the SWPPP, at a minimum, whenever the:

1. Design, operation, or maintenance of Best Management Practice (BMP) structures and/or controls is changed or is deemed inadequate in controlling sediment;

2. Design of the construction project is changed that could significantly affect the quality of the storm water discharges;

3. Inspections indicate deficiencies in the SWPPP or any BMP used at the site;

4. MDNR notifies the permittee of deficiencies in the SWPPP;

5. The SWPPP is determined to be ineffective in significantly minimizing or controlling erosion and off-site sedimentation (e.g., there is visual evidence, such as excessive site erosion or excessive sediment deposits in receiving streams);

6. Non-Filterable Residues (NFR) from a storm water outfall exceeds 45 mg/l;

7. Total Settleable Solids from a storm water outfall exceed 2.5 ml/L/hr, unless the disturbed area is defined under, "Applicability to Valuable Resource Water". Settleable Solids from a storm water outfall in areas near Valuable Resource Water shall not exceed 0.5 ml/L/hr, as indicated in the permit issued by MDNR and/or;

8. MDNR determines violations of Water Quality Standards may occur or have occurred.

Based on the results of an inspection, the SWPPP must be modified as necessary to include additional or modified BMPs designed to correct problems identified. Revisions to the SWPPP must be completed within seven (7) calendar days following the inspection. Implementation of these additional or modified BMPs must be accomplished as soon as possible.

VIII. RETENTION OF RECORDS

The permittee, CITY OF JOPLIN, shall retain copies of the SWPPP and all reports required by this permit, and records of all data used to comply with this permit, for a period of at least three years from the date that the site is finally stabilized and the Notice of Termination is received from the MDNR. This period may be extended by request of the Director of MDNR at any time.

The permittee shall retain a copy of the SWPPP from the date of project initiation to the date of final stabilization, as required by the permit (including a copy of the permit), at the construction site (or other local location), and made available upon request by the MDNR Director, or his representative; or other state or local agency approving or inspecting sediment and erosion control plans, grading plans, or storm water management plans to ensure implementation of the SWPPP, or the operator of a municipal separate storm sewer system, if any, receiving discharges from the site; and representatives of the U.S. Fish and Wildlife Service or the National Marine Fisheries Service. The Permittee, or Contractor(s) with day-to-day operational control over SWPPP implementation shall have a copy of the SWPPP on-site or locally available at all times. A copy of the SWPPP, in its entirety, must be made available to the MDNR staff for review and copying at the time of an on-site inspection. All SWPPPs must be signed and certified, as required.

If an on-site location is unavailable to store the SWPPP when no personnel are present, a sign or other notice of the plan's location must be conspicuously posted near the main entrance of the construction site. If not feasible, the notice can be posted in a local public building, or public library. The sign or other notice must contain the following information:

1) A copy of the completed Application, as submitted to the MDNR Water Pollution Control Program; and

2) If the location of the SWPPP or the name and telephone number of the contact person for scheduling SWPPP viewing times has changed, the current location of the SWPPP and the name and telephone number of the person for scheduling viewing times must be stated.

CITY OF JOPLIN

PROJECT NAME: _____

JASPER/NEWTON COUNTY
JOPLIN, MISSOURI
STORM WATER POLLUTION PREVENTION PLAN (SWPPP)

CERTIFICATION

OWNER'S CERTIFICATION

I certify that, being an authorized representative of CITY OF JOPLIN, owner of the site, the information contained herein is, to the best of my knowledge and belief, true, accurate, and complete. I am aware that there are significant penalties for submitting (if required) false information, including the possibility of fine and imprisonment for knowing violations.

Printed Name:_____

Title:_____

Signature:_____

Date:_____

For: CITY OF JOPLIN
602 S Main Street
Joplin, Missouri, 64801
(417) 624-0820

CONTRACTOR'S CERTIFICATION

I certify under penalty of law, that I, being an authorized representative of the Contractor for the permittee, understand the terms and conditions of the National Pollutant Discharge Elimination System (NPDES) Storm Water Discharge General Permit issued by the Missouri Department of Natural Resources (MDNR) and this Storm Water Pollution Prevention Plan (SWPPP) and shall comply with all conditions of the SWPPP, and the Permit for authorized Storm Water Discharges Associated with Construction or Land Disturbance Activities as issued by the MDNR Water Pollution Control Program, and that any non-compliance with the general permit constitutes a violation of Chapter 644, Missouri Clean Water Law, and 10 CSR 20-6.200. Non-compliance may result in enforcement action, termination of this authorization, or denial of the permittee's request for renewal.

_____
Printed or Typed Name and Title

_____
Contractor's Representative Signature

_____
Date

For: _____
Contractor Name (Print)

_____
Contractor Address

_____
City/State

_____
Contractor Telephone Number

APPENDICES

A. BMP Examples

Construction Site Entrance/Exit Information

Filter Fabric Silt Fence Example

Straw Bale Barrier Example

Storm Drain Inlet Structure Protection Example

Storm Water Outlet Structure Protection Example

B. Inspection and Maintenance Report Forms and Inspection Log Sheet

C. Weather Information Form

D. Changes Required to the SWPPP

E. List of Stabilized Areas Form

F. Major Grading Activities Report

G. Spill/Release Information and Reporting Form

H. Subcontractor Certification List and Subcontractor Certification Form

I. MDNR Technical Bulletin – Response to Small Fuel Spills

J. MDNR Fact Sheet – Open Burning Under Missouri Regulations

K. Notice of Termination (NOT) Form H

L. City Wide National Pollutant Discharge Elimination System Storm Water Discharge General Permit

M. Drawing (Insert a copy into the back cover of this document)

APPENDIX A

BMP EXAMPLES

CONSTRUCTION SITE ENTRANCE/EXIT INFORMATION

FILTER FABRIC SILT FENCE EXAMPLE

STRAW BALE BARRIER EXAMPLE

STORM DRAIN INLET STRUCTURE PROTECTION EXAMPLE

STORM WATER OUTLET STRUCTURE PROTECTION EXAMPLE

4.3 MINIMIZING OFFSITE VEHICLE TRACKING OF SEDIMENTS

Day-to-day site practices can have a major impact on storm water contamination because of their potential for generating sediments. A common problem area is offsite vehicle tracking. Two practices are commonly used for minimizing offsite vehicle tracking of sediments: stabilized construction entrances and construction access road stabilization.

Q. What measures have you taken to prevent offsite vehicle tracking?

Controlling offsite tracking of sediments may require attention at most times when there is vehicle traffic at the construction site. The measures listed here are effective if used properly.

- A stabilized construction entrance and construction road are very effective methods for reducing offsite tracking of mud, dirt, and rocks
- Paved streets adjacent to the site should be swept to remove any excess mud, dirt, or rock tracked from the site
- Deliveries or other traffic should be scheduled at a time when you will have personnel available to provide cleanup if it is required.

4.3.1 Construction Road Stabilization

What Is It

A stabilized construction road is a road built to provide a means for construction vehicles to move around the site without causing significant erosion. A stabilized construction road is designed to be well drained so that water does not puddle or flood the road during wet weather. It typically will have a swale along one or both sides of the road to collect and carry away runoff. Stabilized construction roads should be have a layer of crushed stone or gravel which will cover and protect the soil below from erosion.

When and Where to Use It

A stabilized construction road should be installed in a disturbed area where there will be a high volume of construction traffic expected. A construction road should be stabilized at the beginning of construction and maintained throughout construction. Construction parking areas should be stabilized as well as the roads. A stabilized construction road should not be located in a cut or fill area until after grading has been performed.

What to Consider

Stabilized construction roads should be built to conform to the site grades; this will require a minimum amount of cut and fill. They should also be designed so that the side slopes and road grades are not excessively steep. Construction roads should not be constructed in areas which are wet, or on highly erodible soils.

Advantages of Construction Road Stabilization
• Reduces the amount of erosion, dust, and tracking of soil off of the site • Provides an effective way for vehicles to move around the construction site, even during wet weather
Disadvantages of Construction Road Stabilization
• Can be expensive • May require maintenance to replace gravel or repair ruts

4.3.2 Stabilized Construction Entrance

What Is It

A stabilized construction entrance is a portion of the construction road which is constructed with filter fabric and large stone. The primary purpose of a stabilized construction entrance is to reduce the amount of soil tracked off of the construction site by vehicles leaving the site. The rough surface of the stone will shake and pull the soil off of the vehicles tires as it drives over the entrance. The stone will also reduce erosion and rutting on the portion of the road where it is installed by protecting the soil below. The filter fabric separates the stone from the soil below, preventing the large stone from being ground into the soil. The fabric also reduces the amount of rutting caused by the vehicle tires by spreading the weight of the vehicles over a larger soil area than just the tire width.

When and Where to Use It

A stabilized construction entrance should be installed at every point where traffic leaves or enters a disturbed area before construction begins on the site. Typically, stabilized construction entrances are installed at the locations where the construction traffic enters or leaves an existing paved road; however, a stabilized construction entrance should not be installed over an existing pavement (except for a slight overlap as shown in Figure 4.1). Where the construction will require a permanent access road or driveway, it is recommended that a stabilized construction entrance be installed in this location prior to the permanent pavement.

What to Consider

Stabilized construction entrances should be wide enough and long enough so that the largest construction vehicle will fit in the entrance with room to spare. If a large amount of traffic is expected at an entrance, then the stabilized construction entrance should be wide enough to fit two vehicles across with room to spare.

If the stabilized construction entrance has to cross a swale or stream, then a stream crossing should be provided (see page 3-42).

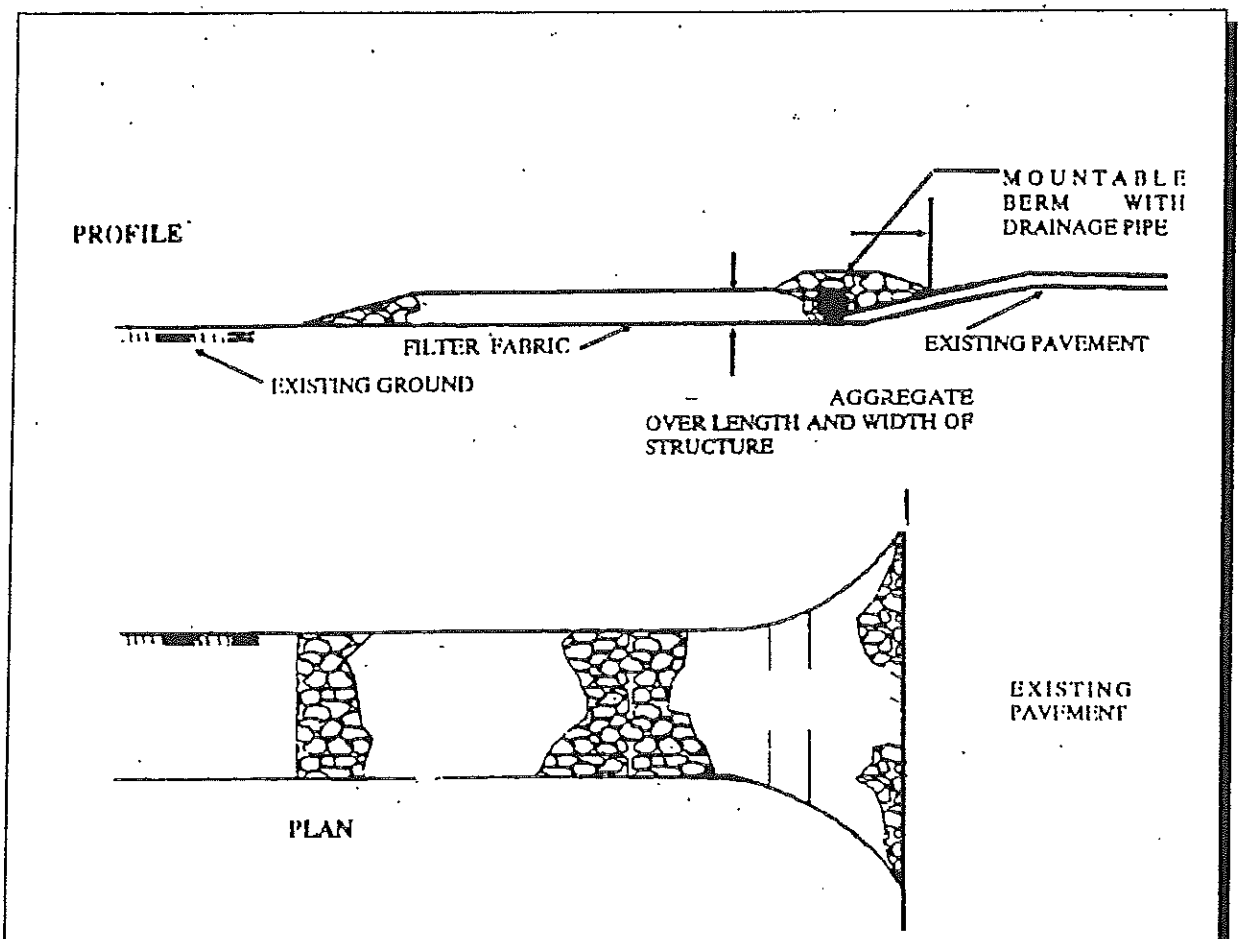

FIGURE 4.1 STABILIZED CONSTRUCTION ENTRANCE
(Modified from Maryland Department of the Environment, 1991)

Stone used for the construction entrance should be large enough so that it is does not get picked up and tracked off of the site by the vehicle traffic. Sharp edged stone should not be used to avoid puncturing tires.

If vehicles will be turning onto the paved road or drive from the stabilized construction entrance, then an apron should be provided as shown above so that vehicles do not go off of the stabilized construction entrance before they leave the site.

The temporary construction entrance may be provided with a vehicle wash rack which drains to a temporary sediment trap or other sediment removing measure. This will allow vehicle tires to be washed prior to leaving the site and ensure that wash water sediments are removed and can be properly disposed of.

Advantages of a Stabilized Construction Entrance
• Is an effective means for reducing the amount of soil tracked off of a construction site • Can improve the appearance of the construction site from the public's point of view
Disadvantages of a Stabilized Construction Entrance
• Only works if it is installed at every location where traffic leaves and enters the site • Cannot always remove all of the soil tracked off of the disturbed areas by vehicles; when soil is tracked onto a road, it should be cleaned up immediately • Stone may have to be added to keep it effective

STABILIZED CONSTRUCTION ENTRANCE

September 1992

Design Criteria

- A Stabilized Construction Entrance (SCE) is appropriate in the following locations:
  - Wherever vehicles are leaving a construction site and enter onto a public road
  - At any unpaved entrance/exit location where there is risk of transporting mud or sediment onto paved roads.
- The width should be at least 10 feet to 12 feet or the as wide as the entire width of the access. At sites where traffic volume is high the entrance should be wide enough for two vehicles to pass safely.
- The length should be between 50 to 75 feet in length.
- Flare the entrance where it meets the existing road to provide a turning radius.
- Runoff from a stabilized construction entrance should drain to a sediment trap or sediment basin.
- Pipe placed under the entrance to handle runoff should be protected with a mountable berm.
- Dust control should be provided in accordance with Section 3.2.1.

Materials

- Crushed stone 2-inches-4-inches in diameter
- Geotextile (filter fabric) with the properties listed in Table 3 below.

TABLE 3. GEOTEXTILE REQUIREMENTS

Physical Property	Requirements
Grab Tensile Strength	220 lbs. (ASTM D1682)
Elongation Failure	60 % (ASTM D1682)
Mullen Burst Strength	430 lbs. (ASTM D3768)
Puncture Strength	125 lbs. (ASTM D751) (modified)
Equivalent Opening	Size 40-80 (US std Sieve) (CW-02215)

Construction Specifications

- Clear all vegetation, roots and all other obstructions in preparation for grading.
- Prior to placing geotextile (filter fabric) make sure that the entrance is properly graded and compacted.

- To reduce maintenance and loss of aggregate place geotextile fabric (filter cloth) over the existing ground before placing the stone for the entrance.
- Stone should be placed to a depth of 6-inches or greater for the entire width and length of the SCE.

Maintenance

- Inspect the measure on a regular basis and after there has been a high volume of traffic or storm event.
- Apply additional stone periodically and when repair is required.
- Immediately remove sediments or any other materials tracked onto the public roadway.
- Ensure that associated sediment control measures are in good working condition.

Cost

- Stabilized construction entrances cost ranges from $1,500 to $5,000 to install.

Sources

- Commonwealth of Virginia - County of Fairfax, 1987. 1987 Check List For Erosion And Sediment Control - Fairfax County, Virginia.
- State of North Carolina, 1988. Erosion and Sediment Control Planning and Design Manual. North Carolina Sedimentation Control Commission, Department of Natural Resources and Community Development.
- Maryland Department of the Environment, 1991. 1991 Maryland Standards And Specifications For Soil Erosion And Sediment Control - Draft.
- Storm Water Management Manual for the Puget Sound Basin. State of Washington, Department of Ecology, 1991.
- Cost Data:
  - Draft Sediment and Erosion Control, An Inventory of Current Practices, April 20, 1990. Prepared by Kamber Engineering for the U.S. Environmental Protection Agency, Office of Water Enforcement and Permits, Washington, D.C. 20460.

Filter Fence

What Is It

A silt fence, also called a "filter fence," is a temporary measure for sedimentation control. It usually consists of posts with filter fabric stretched across the posts and sometimes with a wire support fence. The lower edge of the fence is vertically trenched and covered by backfill. A silt fence is used in small drainage areas to detain sediment. These fences are most effective where there is overland flow (runoff that flows over the surface of the ground as a thin, even layer) or in minor swales or drainageways. They prevent sediment from entering receiving waters. Silt fences are also used to catch wind blown sand and to create an anchor for sand dune creation. Aside from the traditional wooden post and filter fabric method, there are several variations of silt fence installation including silt fence which can be purchased with pockets presewn to accept use of steel fence posts.

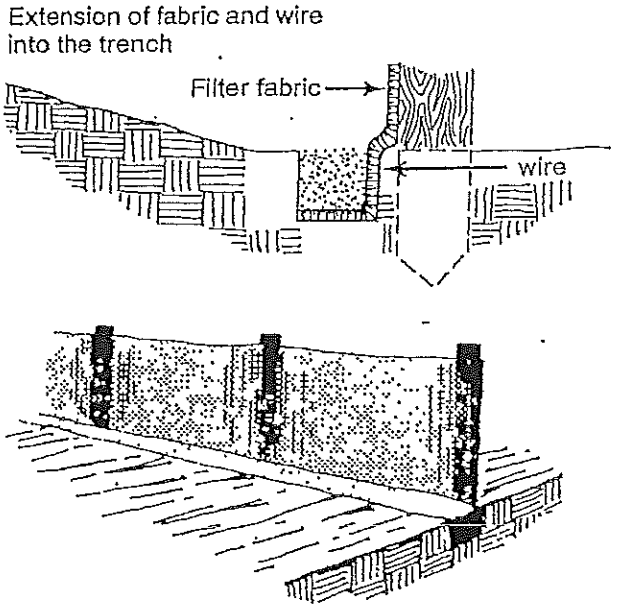

FIGURE 4.20 FILTER FENCE DETAILS
(Modified from State of North Carolina, 1988; and State of Wisconsin, 1988)

When and Where to Use It

A silt fence should be installed prior to major soil disturbance in the drainage area. Such a structure is only appropriate for drainage areas of 1 acre or less with velocities of 0.5 cfs or less (Washington State, 1992). The fence should be placed across the bottom of a slope or minor drainageway along a line of uniform elevation (perpendicular to the direction of flow). It can be used at the outer boundary of the work area. However, the fence does not have to surround the

work area completely. In addition, a silt fence is effective where sheet and rill erosion may be a problem. Silt fences should not be constructed in streams or swales.

What to Consider

A silt fence is not appropriate for a large area or where the flow rate is greater than 0.5 cfs. This type of fence can be more effective than a straw bale barrier if properly installed and maintained. It may be used in combination with other erosion and sediment practices.

The effective life span for a silt fence is approximately 6 months. During this period, the fence requires frequent inspection and prompt maintenance to maintain its effectiveness. Inspect the fence after each rainfall. Check for areas where runoff eroded a channel beneath the fence, or where the fence was caused to sag or collapse by runoff flowing over the top. Remove and properly dispose of sediment when it is one-third to one-half the height of the fence or after each storm.

Advantages of a Filter Fence
• Removes sediments and prevents downstream damage from sediment deposits
• Reduces the speed of runoff flow
• Minimal clearing and grubbing required for installation
• Inexpensive
Disadvantages of a Filter Fence
• May result in failure from improper choice of pore size in the filter fabric or improper installation
• Should not be used in streams
• Is only appropriate for small drainage areas with overland flow
• Frequent inspection and maintenance is necessary to ensure effectiveness

SILT FENCE

September 1992

Design Criteria

- Silt fences are appropriate at the following general locations:
  - Immediately upstream of the point(s) of runoff discharge from a site before flow becomes concentrated (maximum design flow rate should not exceed 0.5 cubic feet per second).
  - Below disturbed areas where runoff may occur in the form of overland flow.
- Ponding should not be allowed behind silt fences since they will collapse under high pressure; the design should provide sufficient outlets to prevent overtopping.
- The drainage area should not exceed 0.25 acre per 100 feet of fence length.
- For slopes between 50:1 and 5:1, the maximum allowable upstream flow path length to the fence is 100 feet; for slopes of 2:1 and steeper, the maximum is 20 feet.
- The maximum upslope grade perpendicular to the fence line should not exceed 1:1.
- Synthetic silt fences should be designed for 6 months of service; burlap is only acceptable for periods of up to 60 days.

Materials

- Synthetic filter fabric should be a pervious sheet of polypropylene, nylon, polyester, or polyethylene yarn conforming to the requirements in Table 1 below.

TABLE 1. SYNTHETIC FILTER FABRIC REQUIREMENTS

Physical Property	Requirements
Filtering Efficiency	75% - 85% (minimum)
Tensile Strength at 20% (maximum) Elongation	Standard Strength - 30 lb/linear inch (minimum)
	Extra Strength - 50 lb/linear inch (minimum)
Slurry Flow Rate	0.3 gal/ft²/min (minimum)

- Synthetic filter fabric should contain ultraviolet ray inhibitors and stabilizers to provide a minimum of 6 months of expected usable construction life at a temperature range of 0 to 120°F.
- Burlap of 10 ounces per square yard of fabric can also be used.
- The filter fabric should be purchased in a continuous roll to avoid joints.
- While not required, wire fencing may be used as a backing to reinforce standard strength filter fabric. The wire fence (14 gauge minimum) should be at 22-48 inches wide and should have a maximum mesh spacing of 6 inches.
- Posts should be 2-4 feet long and should be composed of either 2" x 2-4" pine (or equivalent) or 1.00 to 1.33 lb/linear ft steel. Steel posts should have projections for fastening wire and fabric to them.

Construction Specifications

- The maximum height of the filter fence should range between 18 and 36 inches above the ground surface (depending on the amount of upslope ponding expected).

- Posts should be spaced 8 to 10 feet apart when a wire mesh support fence is used and no more than 6 feet apart when extra strength filter fabric (without a wire fence) is used. The posts should extend 12 to 30 inches into the ground.
- A trench should be excavated 4 to 8 inches wide and 4 to 12 inches deep along the upslope side of the line of posts.
- If standard strength filter fabric is to be used, the optional wire mesh support fence may be fastened to the upslope side of the posts using 1 inch heavy duty wire staples, tie wires, or hog rings. Extend the wire mesh support to the bottom of the trench. The filter fabric should then be stapled or wired to the fence, and 8 to 20 inches of the fabric should extend into the trench (Figure 1).
- Extra strength filter fabric does not require a wire mesh support fence. Staple or wire the filter fabric directly to the posts and extend 8 to 20 inches of the fabric into the trench (Figure 1).
- Where joints in the fabric are required, the filter cloth should be spliced together only at a support post, with a minimum 6-inch overlap, and securely sealed.
- Do not attach filter fabric to trees.
- Backfill the trench with compacted soil or 0.75 inch minimum diameter gravel placed over the filter fabric.

Maintenance

- Inspect filter fences daily during periods of prolonged rainfall, immediately after each rainfall event, and weekly during periods of no rainfall. Make any required repairs immediately.
- Sediment must be removed when it reaches one-third to one-half the height of the filter fence. Take care to avoid damaging the fence during cleanout.
- Filter fences should not be removed until the upslope area has been permanently stabilized. Any sediment deposits remaining in place after the filter fence has been removed should be dressed to conform with the existing grade, prepared, and seeded.

Cost

- Silt fence installation costs approximately $6.00 per linear foot.

Sources

- Commonwealth of Virginia - County of Fairfax, 1987. 1987 Check List For Erosion And Sediment Control - Fairfax County, Virginia.
- State of North Carolina, 1988. Erosion and Sediment Control Planning and Design Manual. North Carolina Sedimentation Control Commission, Department of Natural Resources and Community Development.
- Maryland Department of the Environment, 1991. 1991 Maryland Standards And Specifications For Soil Erosion And Sediment Control - Draft.

Straw Bale Barrier

What Is It

Straw bales can be used as a temporary sediment barrier. They are placed end to end in a shallow excavated trench (with no gaps in between) and staked into place. If properly installed, they can detain sediment and reduce flow velocity from small drainage areas. A straw bale barrier prevents sediment from leaving the site by trapping the sediment in the barrier while allowing the runoff to pass through. It can also be used to decrease the velocity of sheetflow or channel flows of low-to-moderate levels.

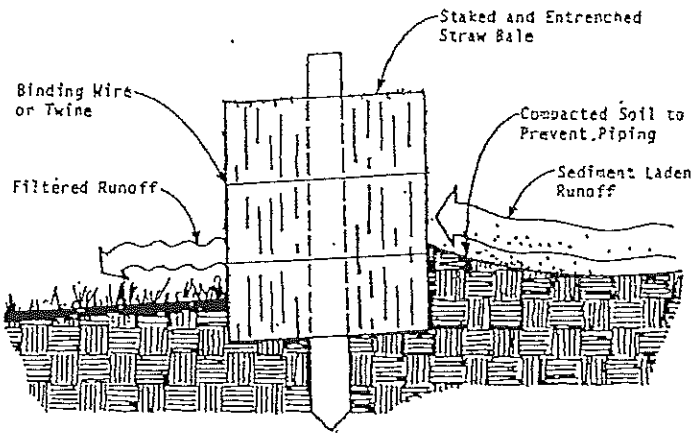

FIGURE 4.21 CROSS SECTION OF A PROPERLY INSTALLED STRAW BALE BARRIER
(Modified from State of Wisconsin, 1988)

When and Where to Use It

A straw bale barrier should be installed prior to major soil disturbance in the drainage area. This type of barrier is placed perpendicular to the flow, across the bottom of a slope or minor drainageway where there is sheetflow. It can be used at the perimeter of the work area, although is does not have to surround it completely. It can also be very effective when used in combination with other erosion and sediment control practices. A straw bale barrier may be used where the length of slope behind the barrier is less than 100 feet and where the slope is less than 2:1.

What to Consider

The success of a straw bale barrier depends on proper installation. The bales must be firmly staked into the entrenchment and the entrenchment must be properly backfilled. To function effectively, the bales must be placed end to end and there can be no gaps between the bales.

Straw bale barriers are useful for approximately 3 months. They must be inspected and repaired immediately after each rainfall or daily if there is prolonged rainfall. Damaged straw bales require

Storm Drain Inlet Protection

What Is It

Storm drain inlet protection is a filtering measure placed around any inlet or drain to trap sediment. This mechanism prevents the sediment from entering inlet structures. Additionally, it serves to prevent the silting-in of inlets, storm drainage systems, or receiving channels. Inlet protection may be composed of gravel and stone with a wire mesh filter, block and gravel, filter fabric, or sod.

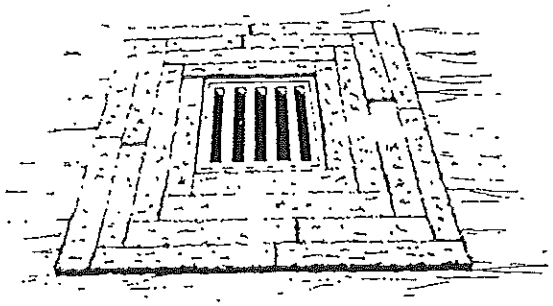

Sod Inlet Protection

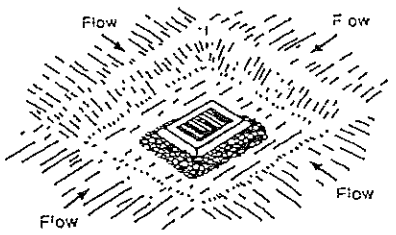

Excavated Gravel Inlet Protection

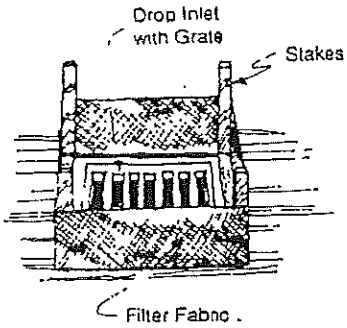

Filter Fabric Inlet Protection

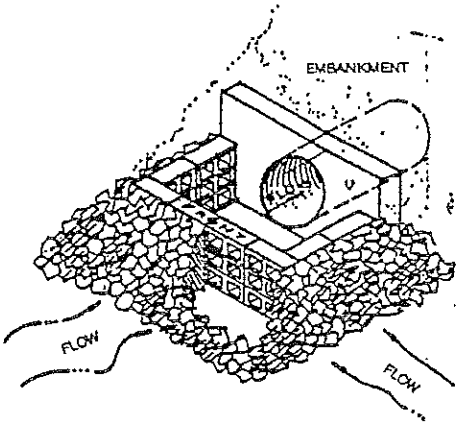

Block and Gravel Inlet Protection

FIGURE 4.24 EXAMPLES OF STORM DRAIN INLET PROTECTION
(Modified from State of North Carolina, 1988; Washington State, 1992; and County of Fairfax, 1987)

When and Where to Use It

This type of protection is appropriate for small drainage areas where storm drain inlets will be ready for use before final stabilization. Storm drain inlet protection is also used where a permanent storm drain structure is being constructed onsite. Straw bales are not recommended for this purpose. Filter fabric is used for inlet protection when storm water flows are relatively small with low velocities. This practice cannot be used where inlets are paved because the filter fabric should be staked. Block and gravel filters can be used where velocities are higher. Gravel and mesh filters

can be used where flows are higher and subject to disturbance by site traffic. Sod inlet filters are generally used where sediments in the storm water runoff are low.

What to Consider

Storm drain inlet protection is not meant for use in drainage areas exceeding 1 acre or for large concentrated storm water flows. Installation of this measure should take place before any soil disturbance in the drainage area. The type of material used will depend on site conditions and the size of the drainage area. Inlet protection should be used in combination with other measures, such as small impoundments or sediment traps, to provide more effective sediment removal. Inlet protection structures should be inspected regularly, especially after a rainstorm. Repairs and silt removal should be performed as necessary. Storm drain inlet protection structures should be removed only after the disturbed areas are completely stabilized.

Advantages of Storm Drain Inlet Protection
• Prevents clogging of existing storm drainage systems and the siltation of receiving waters • Reduces the amount of sediment leaving the site
Disadvantages of Storm Drain Inlet Protection
• May be difficult to remove collected sediment • May cause erosion elsewhere if clogging occurs • Is practical only for low sediment, low volume flows

FILTER FABRIC INLET PROTECTION

September 1992

Design Criteria

- Inlet protection is appropriate in the following locations:
  - In small drainage areas (less than 1 acre) where the storm drain inlet is functional before the drainage area has been permanently stabilized.
  - Where there is danger of sediment silting in an inlet which is in place prior to permanent stabilization.
- Filter fabric inlet protection is appropriate for most types of inlets where the drainage area is one acre or less.
- The drainage area should be fairly flat with slopes of 5% or less and the area immediately surrounding the inlet should not exceed a slope of 1%.
- Overland flow to the inlet should be no greater than 0.5 cfs.
- This type of inlet protection is not appropriate for use in paved areas because the filter fabric requires staking.
- To avoid failure caused by pressure against the fabric when overtopping occurs, it is recommended that the height of the filter fabric be limited to 1.5 feet above the crest of the drop inlet.
- It is recommended that a sediment trapping sump of 1 to 2 feet in depth with side slopes of 2:1 be provided.

Materials

- Filter fabric (see the fabric specifications for silt fence).
- Wooden stakes 2" x 2" or 2"x 4" with a minimum length of 3 feet.
- Heavy-duty wire staples at least ½ inch in length.
- Washed gravel ¾ inches in diameter.

Construction Specifications

- Place a stake at each corner of the inlet and around the edges at no more than 3 feet apart. Stakes should be driven into the ground 18 inches or at a minimum 8 inches.
- For stability a framework of wood strips should be installed around the stakes at the crest of the overflow area 1.5 feet above the crest of the drop inlet.
- Excavate a trench of 8 inches to 12 inches in depth around the outside perimeter of the stakes. If a sediment trapping sump is being provided then the excavation may be as deep as 2 feet.
- Staple the filter fabric to the wooden stakes with heavy-duty staples, overlapping the joints to the next stake. Ensure that between 12 inches to 32 inches of filter fabric extends at the bottom so it can be formed into the trench.
- Place the bottom of the fabric in the trench and backfill the trench all the way around using washed gravel to a minimum depth of 4 inches.

Maintenance

- Inspect regularly and after every storm. Make any repairs necessary to ensure the measure is in good working order.
- Sediment should be removed and the trap restored to its original dimensions when sediment has accumulated to ½ the design depth of the trap.
- If the filter fabric becomes clogged it should be replaced immediately.
- Make sure that the stakes are firmly in the ground and that the filter fabric continues to be securely anchored.
- All sediments removed should be properly disposed.
- Inlet protection should remain in place and operational until the drainage area is completely stabilized or up to 30 days after the permanent site stabilization is achieved.

Cost

- The cost of storm drain inlet protection varies dependent upon the size and type of inlet to be protected but generally is about $300.00 per inlet.

Sources

- Commonwealth of Virginia - County of Fairfax, 1987. 1987 Check List For Erosion And Sediment Control - Fairfax County, Virginia.
- State of North Carolina, 1988. Erosion and Sediment Control Planning and Design Manual. North Carolina Sedimentation Control Commission, Department of Natural Resources and Community Development.
- Maryland Department of the Environment, 1991. 1991 Maryland Standards And Specifications For Soil Erosion And Sediment Control - Draft.
- Storm Water Management Manual for the Puget Sound Basin. State of Washington, Department of Ecology, 1991.
- Cost Data:
  - Draft Sediment and Erosion Control, An Inventory of Current Practices, April 20, 1990. Prepared by Kamber Engineering for the U.S. Environmental Protection Agency, Office of Water Enforcement and Permits, Washington, D.C. 20460.

Outlet Protection

What Is It

Outlet protection reduces the speed of concentrated storm water flows and therefore it reduces erosion or scouring at storm water outlets and paved channel sections. In addition, outlet protection lowers the potential for downstream erosion. This type of protection can be achieved through a variety of techniques, including stone or riprap, concrete aprons, paved sections and settling basins installed below the storm drain outlet.

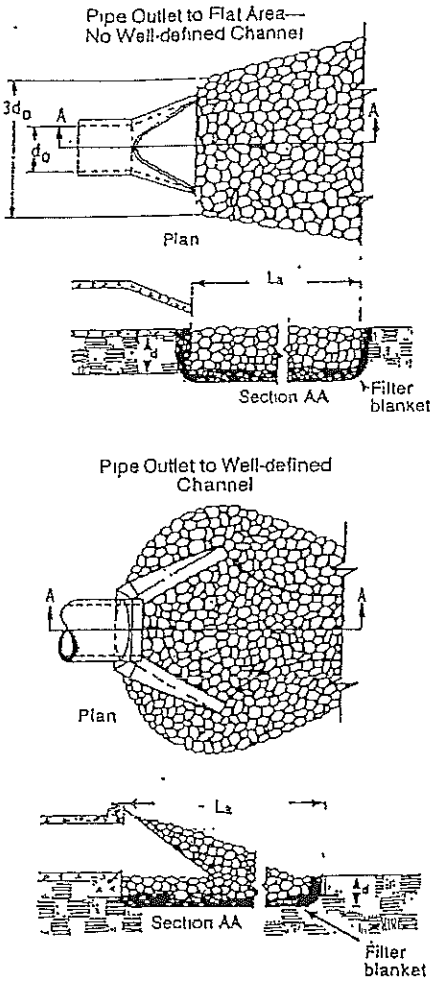

FIGURE 4.27 TYPICAL DETAILS FOR ROCK OUTLET PROTECTION
(Modified from State of North Carolina, 1988)

When and Where to Use It

Outlet protection should be installed at all pipe, interceptor dike, swale, or channel section outlets where the velocity of flow may cause erosion at the pipe outlet and in the receiving channel. Outlet protection should also be used at outlets where the velocity of flow at the design capacity may result in plunge pools (small permanent pools located at the inlet to or the outfall from BMPs). Outlet protection should be installed early during construction activities, but may be added at any time, as necessary.

What to Consider

The exit velocity of the runoff as it leaves the outlet protection structure should be reduced to levels that minimize erosion. Outlet protection should be inspected on a regular schedule to look for erosion and scouring. Repairs should be made promptly.

Advantages of Outlet Protection
• Provides, with riprap-line apron (the most common outlet protection), a relatively low cost method that can be installed easily on most sites • Removes sediment in addition to reducing flow speed • Can be used at most outlets where the flow speed is high • Is an inexpensive but effective measure • Requires less maintenance than many other measures
Disadvantages of Outlet Protection
• May be unsightly • May cause problems in removing sediment (without removing and replacing the outlet protection structure itself) • May require frequent maintenance for rock outlets with high velocity flows

APPENDIX B

INSPECTION AND MAINTENANCE REPORT FORM
and
INSPECTION LOG SHEET

CITY OF JOPLIN

PROJECT NAME: _____

JASPER/NEWTON COUNTY

JOPLIN, MISSOURI

STORM WATER POLLUTION PREVENTION PLAN
(SWPPP)
INSPECTION AND MAINTENANCE REPORT FORM
TO BE COMPLETED AT LEAST ONCE PER WEEK, PRIOR TO A KNOWN MAJOR STORM EVENT, AND WITHIN 24 HOURS OF A 0.5 INCH OR MORE RAINFALL EVENT

INSPECTOR: _____ DATE: _____

DAYS SINCE LAST RAINFALL: _____ AMOUNT OF THIS RAINFALL _____ INCHES

Storm Water Control (If applicable)	Condition	Repair Req'd		Comments (Attach additional Sheets if Necessary)	Date Repaired	Initials
		Yes	No			
Site Entrance/Exit(s)				See Below		
Filter Fabric Fences						
Straw Bales						
Seeded Areas						
Top Soil Stockpile(s)						
Material Storage Areas						
Portable Toilet(s)						
Waste Container(s)						
Fuel Storage						
Outfall #001						
Outfall #002						
Outfall #003						
Others-List on P. 4						

STABILIZED CONSTRUCTION SITE ENTRANCE

Does Sediment Get Tracked on to Road?	Is the Rock Clean or is it Filled with Sediment?	Does All Traffic Use the Stabilized Entrance to Enter and Leave the Site?	Is the Culvert (if installed) Beneath the Entrance Working?

Describe Maintenance Required to the Stabilized Construction Entrance: _____

_____

_____

_____

_____

_____

Continued on Reverse Side

SEDIMENT BASIN (S)

Depth of Sediment Basin	Condition of Basin Side Slopes	Any Evidence of Overtopping of the Embankment	Condition of Outfall from Sediment Basins
N/A			

Describe Maintenance Required for the Sediment Basins: _____

_____

☐ If this box is checked, I hereby certify that this inspection did not identify any incidents of non-compliance and that the facility is in compliance with the permit and the SWPPP.

CERTIFICATION:

Qualified personnel must conduct all inspections. "Qualified Personnel" means a person knowledgeable in the principles and practice of erosion and sediment controls who possesses the skills to assess conditions at the construction site that could impact storm water quality and to assess the effectiveness of any sediment and erosion control measures selected to control the quality of storm water discharges from the construction activity. I certify under penalty of law that I am qualified to properly gather and evaluate the information submitted and that the information submitted is, to the best of my knowledge and belief, true, accurate, and complete. I am aware that there are significant penalties for submitting false information, including the possibility of fine and imprisonment for known violations.

Signature: _____ Date: _____

Printed Name: _____ Contractor: _____

Address: _____ City/State: _____

All Maintenance Items Required and Described above are:

To be performed by: _____ On or Before: _____

Signature: _____ Date: _____

Date Repaired: _____ By: _____

List of Items Repaired: _____

_____

Signature: _____ Contractor: _____

Printed Name: _____ Date: _____

CITY OF JOPLIN

PROJECT NAME: _____

JASPER/NEWTON COUNTY
JOPLIN, MISSOURI

STORM WATER POLLUTION PREVENTION PLAN (SWPPP) INSPECTION AND MAINTENANCE REPORT FORM

CERTIFICATION:

I certify under penalty of law that this document and all attachments were prepared under my direction or supervision in accordance with a system designed to assure that qualified personnel properly gathered and evaluated the information submitted. Based on my inquiry of the person or persons who manage this SWPPP system, or those persons directly responsible for gathering the information, the information submitted is, to the best of my knowledge and belief, true, accurate, and complete. I am aware that there are significant penalties for submitting false information, including the possibility of fine and imprisonment for known violations.

Signature: _____ Date: _____

Printed Name: _____ Phone: _____

Contractor: _____ Address: _____

City/State: _____

Report Submitted to and Received by Owner (Permittee), CITY OF JOPLIN, Joplin, Missouri.

Date: _____

Submitted by: _____
Printed Name – For the Contractor

Signature: _____

Contractor: _____

Date: _____

Received by: _____
Printed Name – CITY OF JOPLIN

Signature: _____

NOTE: All inspection and maintenance report forms shall be retained by the owner for at least three years from the date the site is finally and permanently stabilized, and permit coverage expires or is terminated. This period may be extended by the request of MDNR at any time.

# of additional sheets attached = _____

CITY OF JOPLIN

PROJECT NAME: _____

JASPER/NEWTON COUNTY
JOPLIN, MISSOURI

STORM WATER POLLUTION PREVENTION PLAN
(SWPPP)
INSPECTION LOG SHEET

REGULARLY SCHEDULED INSPECTIONS SHALL BE AT A MINIMUM OF ONCE PER WEEK, PRIOR TO A KNOWN MAJOR STORM EVENT, AND WITHIN 24 HOURS OF A 0.5 INCHES OR MORE RAINFALL EVENT

DATE OF INSPECTION	ANY BMPs NEED MAINTENANCE? YES/NO	INSPECTORS NAME

Note: To be completed along with each INSPECTION AND MAINTENANCE REPORT

APPENDIX C

WEATHER INFORMATION FORM

CITY OF JOPLIN

PROJECT NAME: _____

JASPER/NEWTON COUNTY
JOPLIN, MISSOURI

STORM WATER POLLUTION PREVENTION PLAN
(SWPPP)

CONSTRUCTION SITE WEATHER INFORMATION DATA

DATE	PRECIPITATION START TIME	PRECIPITATION END TIME	AMOUNT (INCHES)	DISCHARGE AT OUTFALLS? YES (#) / NO	INITIALS

Date: _____ Date: _____

Submitted by: _____
Printed Name – Contractor Representative

Received by: _____
Printed Name – CITY OF JOPLIN Representative

Signature: _____ Signature: _____

APPENDIX D

CHANGES REQUIRED TO THE SWPPP

CITY OF JOPLIN

PROJECT NAME: _____

JASPER/NEWTON COUNTY
JOPLIN, MISSOURI

STORM WATER POLLUTION PREVENTION PLAN
(SWPPP)

CHANGES REQUIRED TO THE SWPPP

CHANGES REQUIRED: _____

_____

_____

_____

_____

REASONS FOR CHANGES: _____

_____

_____

_____

_____

Date Changes Made to SWPPP: _____

Date Changes Implemented at the Site: _____

I certify under penalty of law that this document and all attachments were prepared under my direction or supervision in accordance with a system designed to assure that qualified personnel properly gathered and evaluated the information submitted. Based on my inquiry of the person or persons who manage the system, or those persons directly responsible for gathering the information, the information submitted is, to the best of my knowledge and belief, true, accurate, and complete. I am aware that there are significant penalties for submitting false information, including the possibility of fine and imprisonment for known violations.

Number of Additional Pages Attached: _____

Printed Name: _____ Company: _____

Signature: _____ Date: _____

Date Received by CITY OF JOPLIN: _____

Received by: _____ Signature: _____
Printed Name – CITY OF JOPLIN Representative

APPENDIX E

LIST OF STABILIZED AREAS

CITY OF JOPLIN

PROJECT NAME: _____

JASPER/NEWTON COUNTY
JOPLIN, MISSOURI

STORM WATER POLLUTION PREVENTION PLAN
(SWPPP)

LIST OF STABILIZED AREAS

DESCRIPTION OF AREA WHERE FINAL STABILIZATION HAS BEEN ACHIEVED	DATE STABILIZED /INITIALS

INITIALS _____ NAME _____
INITIALS _____ NAME _____

APPENDIX F

MAJOR GRADING ACTIVITIES REPORT FORM

CITY OF JOPLIN

PROJECT NAME: _____

JASPER/NEWTON COUNTY
JOPLIN, MISSOURI

STORM WATER POLLUTION PREVENTION PLAN
(SWPPP)

MAJOR GRADING ACTIVITIES REPORT

GRADING START DATE	GRADING END DATE	LOCATION ¼, ¼, SECTION, TWP, RGE or AREA DESCRIPTION	STABILIZATION MEASURES INITIATED YES/DATE ---------NO

Date: _____ Date: _____

Submitted by: _____ Received by: _____
Printed Name – Contractor Printed Name – CITY OF JOPLIN Representative

Signature: _____ Signature: _____

APPENDIX G

SPILL/RELEASE INFORMATION AND REPORTING FORM

CITY OF JOPLIN

PROJECT NAME: _____

JASPER/NEWTON COUNTY
JOPLIN, MISSOURI

SPILL/RELEASE INFORMATION AND REPORTING FORM

1. Basic description of the spill/release, including causes, if known:

_____
_____
_____
_____
_____
_____

(If additional space is required, attach additional sheets.)

2. Chemical Name of Material Spilled: _____
3. Listed CERCLA Hazardous Substance? Yes ___ No ___
4. Listed EPCRA Extremely Hazardous Substance? Yes ___ No ___
5. Oil? Yes ___ No ___
6. Quantity Spilled (exclude water): _____
7. Date and Time of Spill: _____
8. Duration of Spill: _____
9. Spill Went to: Water: _____ Land: _____ Air: _____
10. Any known or anticipated acute or chronic health risks associated with the spill and, where appropriate, advice regarding medical attention necessary for exposed individuals.

_____
_____
_____
_____

11. Proper precautions to take as a result of the release, including evacuation (unless such information is readily available to the community emergency coordinator pursuant to the emergency plan).

_____
_____
_____
_____

12. Spill Reported By: _____

    Date: _____

    Spill Reported to: _____
_____
_____

SEE REVERSE SIDE OF FORM FOR REPORTING REQUIREMENTS

REPORTABLE QUANTITIES FOR OIL
AND HAZARDOUS SUBSTANCES ARE FOUND AT
40 CFR Part 110, 40 CFR Part 117, & 40 CFR Part 302

In accordance with the Missouri Department of Natural Resources (MDNR), Division of Environmental Quality, a Release and a Reportable Release of Petroleum Products are defined as follows:

Release: Any loss of petroleum product to the environment is considered a release. This definition includes, but is not limited to, any spilling, leaking, emitting, discharging, escaping, leaching, or disposing from a storage tank into ground water, surface water, surface or subsurface soils.

Reportable Release: A petroleum product release greater than fifty (50) gallons, or spills and/or overfills of petroleum product from an underground storage tank that result in a release to the environment that exceeds twenty-five (25) gallons, or any release that causes a sheen on nearby surface water; and a spill or overfill of a hazardous substance that results in a release to the environment that equals or exceeds its reportable quantity under the Comprehensive Environmental Response, Compensation and Liability Act (CERCLA) of 1980 is a reportable release and must be reported to the MDNR within twenty-four (24) hours. Soil contamination levels of TPH =/>50 parts per million (ppm), BTEX =/>1.0 ppm, benzene =/>0.5 ppm, or MTBE =/>60 ppm is also considered to be evidence of a reportable "release" of petroleum products.

Formal reporting of a Reportable Release shall be as follows:

MDNR – Environmental Emergency Response Unit – (573) 634-2436 (Follow MDNR instructions)
National Response Center – 1-800-424-8802
MDNR – Southwest Regional Office – (417) 891-4300
MDNR – Jefferson City – (573) 751-3176
CITY OF JOPLIN – David Hertzberg, P.E., Public Works Director – 417-624-0820
McDonald County Local Emergency Planning Committee, Pineville, MO – 417-223-4319
White Rock Fire Protection District – Emergency 911 – Non-Emergency 417-223-4318

All spills reported by telephone shall be reported in writing within 24 hours by the responsible party, and submitted to the MDNR Environmental Emergency Response Unit, or as directed by the Agency, with copies submitted to Mr. David Hertzberg, P.E., Public Works Director, CITY OF JOPLIN.

Circumstances (causes) leading to the release:

_____

_____

_____

Steps taken to prevent recurrence of the release:

_____

_____

_____

Date SWPPP modified to reflect the release and prevent similar future release: _____

Printed Name: _____

Signature/Title: _____

Organization: _____

APPENDIX H

SUBCONTRACTOR CERTIFICATION LIST
and
SUBCONTRACTOR CERTIFICATION FORM

CITY OF JOPLIN

PROJECT NAME: _____

JASPER/NEWTON COUNTY
JOPLIN, MISSOURI

STORM WATER POLLUTION PREVENTION PLAN
(SWPPP)

SUBCONTRACTORS CERTIFICATION LIST

SUBCONTRACTOR	ADDRESS	DATE SIGNED

CITY OF JOPLIN

PROJECT NAME: _____

JASPER/NEWTON COUNTY
JOPLIN, MISSOURI

STORM WATER POLLUTION PREVENTION PLAN (SWPPP)

SUBCONTRACTORS CERTIFICATION

SUBCONTRACTORS CERTIFICATION

I certify under penalty of law, that I, being an authorized representative of the Subcontractor for the permittee, understand the terms and conditions of the National Pollutant Discharge Elimination System (NPDES) Storm Water Discharge General Permit issued by the Missouri Department of Natural Resources (MDNR) and this Storm Water Pollution Prevention Plan (SWPPP) and shall comply with all conditions of the SWPPP, and the Permit for authorized Storm Water Discharges Associated with Construction or Land Disturbance Activities as issued by the MDNR Water Pollution Control Program, and that any non-compliance with the general permit constitutes a violation of Chapter 644, Missouri Clean Water Law, and 10 CSR 20-6.200. Non-compliance may result in enforcement action, termination of this authorization, or denial of the permittee's request for renewal.

_____
Printed or Typed Name and Title

_____
Subcontractor's Representative Signature

_____
Date

For: _____
Subcontractor Name (Print)

_____
Subcontractor Address

_____
City/State

_____
Subcontractor Telephone Number

APPENDIX I

MDNR TECHNICAL BULLETIN

RESPONSE TO SMALL FUEL SPILLS

MISSOURI DEPARTMENT OF NATURAL RESOURCES

Missouri
Department of Natural Resources
Department of Public Safety

Response to Small Fuel Spills

DNR Environmental Services Program/DPS Division of Fire Safety fact sheet 3/2009

Local fire departments often respond to releases of small amounts of petroleum products. This technical bulletin is intended to provide fire departments with information regarding responses to these types of releases.

Missouri state law requires the responsible party (spiller) to report petroleum product releases greater than 50 gallons to the Missouri Department of Natural Resources (DNR) at (573) 634-2436 at the earliest practical moment upon discovery. If the release is from an underground storage tank (UST) or piping, the reportable quantity is 25 gallons or more. Above ground storage tanks (AST) that have released 50 gallons or greater are also required to report. Further, federal law requires the responsible party to report any release of oil if the oil reaches or threatens any waterway. The definition of waterway includes sewers, groundwater, wetlands, lakes, creeks, streams, rivers and areas that may not have running water in them at the time, such as road ditches that drain into other waterways.

In the past, small fuel spills were routinely addressed by "flushing" with either foam or water. Unfortunately, this manner of response often resulted in the fuel reaching a waterway, potentially causing a greater problem than the initial spill itself. While many fire departments realize that flushing may cause more problems than it solves, information regarding alternative cleanup methods may not be readily available. The following information is provided by the Missouri Department of Public Safety (DPS) and DNR as possible alternative response actions to small fuel spills.

NOTE: It is understood that public safety must be the first consideration in a response and that the following actions may not be the most appropriate in certain situations.

1. If possible, the spill of fuel should be contained and the release stopped. Apply sand, gravel, soil, straw, sawdust, ground corn cobs, or commercial absorbents such as kitty litter or oil dry to absorb/contain petroleum residues rather than wash them away with water. Attempt to identify and take measures to protect any stormwater drains with absorbents. Absorbent materials used to clean up fuel spills may be disposed at a sanitary landfill with prior approval of the landfill operator.

2. If fire hazard reduction measures are necessary, use foam as appropriate. Do not over apply. Use as little water on the spill as necessary.

3. Pump, recover, and containerize as much free product as possible. In many cases, recovered product can be routed back to refineries for recycling, or used for other purposes such as fire department training exercises. Another method of disposal is use in fuel blending operations; however, this is not a viable alternative if the fuel has been contaminated with large amounts of water. If the spilled fuel contains too much water to lend itself as a usable resource, it may have to be tested and disposed as a regulated hazardous waste.

4. If flushing with water is the chosen option to mitigate hazards, runoff should be containerized and/or routed to a sanitary sewer **with the knowledge and approval of the wastewater treatment plant operator**.

5 .Treatment chemicals and agents should not be used except under special circumstances and with prior authorization obtained from the U.S. Environmental Protection Agency. A list of treatment chemicals and chemical countermeasures can be found at: http://www.epa.gov/emergencies/docs/oil/ncp/schedule.pdf.
If a fire department has questions as to the proper application of such agents, DNR may be contacted 24 hours a day at 573-634-2436 for technical assistance. As stated in Item 3, water contaminated with petroleum may be required by law to be tested and disposed as a hazardous waste.

According to Missouri Hazardous Waste Management Laws and Regulations, the responsibility for proper disposal of a hazardous waste is that of the owner of that waste (who could be the spiller, the owner of the shipment, or the owner of a facility where the spill occurred). Fire departments should exercise CAUTION; if the material is flushed to a waterway during a response, it could potentially cause water quality issues that would prolong the remediation of the spill.

Not all fire departments have financial resources to maintain stocks of absorbent materials, containers, and other related response equipment. Access to vacuum trucks, heavy equipment, and other necessary services may, likewise, be difficult for some jurisdictions to obtain. It is recommended that a fire department's contingency planning include identification of supply and service sources in order to be prepared for these types of releases.

Every response method has its own inherent advantages and disadvantages. Specific response methods must be evaluated and initiated on a case-by-case basis.

Questions about this guidance may be directed to DNR's Environmental Emergency Response Section at 573-526-3349 (non-emergency), or 573-634-2436 (emergency), or to DPS's Division of Fire Safety at 573-51-2930 (non-emergency).

On the Web:

www.dnr.mo.gov -- http://www.dnr.mo.gov/pubs/pub212.pdf, or
www.dfs.dps.mo.gov

PUB000212

APPENDIX J

MDNR FACT SHEET

OPEN BURNING UNDER MISSOURI REGULATIONS

Missouri Department of Natural Resources

Facts on Open Burning Under Missouri Regulations

Air Pollution Control Program fact sheet 1/2008

Open burning is the burning of any materials in which air contaminants are emitted directly into the air without first passing through a stack or chimney. This fact sheet summarizes allowable and prohibited open burning under Missouri regulations. It does not include open burning restrictions that city or county governments may impose in addition to Missouri's state regulations. Prior to conducting any open burning, businesses and citizens should contact the city or county of jurisdiction for any local restrictions.

The open burning of certain trade wastes and tires is prohibited because the toxic emissions that can be released are harmful to human health. Smoke from fires also typically produces large amounts of small particulate matter that can be inhaled, causing respiratory problems. The burning of common household trash, including paper products and food wastes, can also have severe consequences. Studies have indicated the open burning of an individual household's trash could release pollutants in higher levels than the burning of the trash of thousands of homes by a municipal waste incinerator because the lower combustion temperatures prevent complete incineration. These pollutants can include dioxins, volatile organic compounds, acetaldehyde, formaldehyde, hydrogen chloride and naphthalene. Open burning exposes individuals to toxic emissions that may irritate the eyes, skin and upper respiratory tract. The central nervous system can also be affected causing headaches, dizziness and fatigue.

Because of these potential dangers, the Missouri Department of Natural Resources strongly discourages open burning of any material prior to investigating alternatives. Some rural areas can participate in a "green box" service, which provides a trash collection point near a centrally located county road for local residents to use. Green boxes are usually picked up or emptied once a week. Other options include waste disposal services, waste diversion, recycling and composting. Contact your local Solid Waste Management District for assistance in implementing these safer alternatives to open burning.

Prohibited Open Burning Under State Regulation

Any waste generated by a business, trade, industry, salvage or demolition operation cannot be burned without a permit issued by the Department of Natural Resources or its delegated local agency. Permits will only be considered for untreated wood wastes. Wastes that may not be burned include but are not limited to tires, rubber products, hazardous materials, styrofoam, plastics, petroleum based products, demolition waste, treated wood and any asbestos-containing material.

Allowable Open Burning Under State Regulations

Note: Local governments may have stricter laws and policies

Open Burning of Household Refuse

General Provisions: Missouri allows open burning of household refuse from four dwelling units or less provided it originates and is burned on the same premises. This exemption does not apply to mobile home parks or apartment complexes. Residential waste is solid waste produced by routine household activities, such as paper waste and garbage from daily activities. This does not include home remodeling wastes, wastes from home businesses, durable goods such as old appliances, carpets or furniture, tires or other nonroutine household waste. Materials such as tires or used oil may not be used to start the fires or be burned in the fires.

Kansas City and St. Joseph metropolitan areas: Open burning is allowed provided it occurs within an area zoned for agricultural purposes and outside the portion of the metropolitan areas surrounding the corporate limits of Kansas City and St. Joseph and their bordering municipalities.

Outstate area: No special day, time or location restrictions.

Springfield-Greene County area: Open burning is allowed provided that burning takes place outside the corporate limits of Springfield and only within areas zoned A-1, Agricultural District.

St. Louis metropolitan area: Open burning of household refuse is prohibited in the St. Louis metropolitan area.

Open Burning of Yard Wastes

General Provisions: Missouri allows open burning of yard wastes from sites provided it originates and is burned on the same premises. Materials such as tires or used oil may not be used to start the fires or be burned in the fires. Yard waste includes trees, tree leaves, brush or other vegetation.

Kansas City metropolitan area: Open burning of trees, tree leaves, brush or any other type of vegetation requires an open burning permit.

St. Joseph metropolitan area: Open burning of residential yard wastes is allowed only during a three week period in spring and during a three-week period in fall between 10 a.m. and 3:30 p.m. The two, three-week periods are to be determined by the city along with state agencies and the state fire marshal.

Outstate area: No special day, time or location restrictions.

Springfield-Greene County area: Open burning of trees, brush or any other type of vegetation requires an open burning permit. The open burning of leaves is prohibited.

St. Louis metropolitan area: Open burning of trees, tree leaves or brush is allowed only in areas outside of incorporated municipalities from Sept. 16 to April 14 of each calendar year. These brush piles are limited to a base of 16 square feet and the burning is allowed from 10 a.m. through 4 p.m.

Open Burning for Fire Training Purposes

Missouri allows fires set for the purpose of training fire fighters provided they are conducted in accordance with National Fire Protection Association Standards 600 and 1403. Timely notification should be provided to the appropriate regional office or delegated local agency. All fire training exercises involving donated or acquired structures must be conducted in compliance with 40 CFR part 61 subpart M, *National Emission Standard for Hazardous Air Pollutants-Asbestos*. The use of donated or acquired structures for training is discussed in Publication 2029. All petroleum based products and asbestos containing materials must be removed from donated or acquired structures prior to any burning.

Open Burning in Agricultural, Natural Resource or Land Management Operations

Missouri allows agricultural burning throughout the state. However, several exceptions apply. Materials such as tires or used oil may not be used to start the fires or be burned in the fires. Any burning that creates a health hazard, nuisance or produces smoke that impairs visibility for those operating motor vehicles or airplanes is prohibited. Contact the St. Louis Regional Office before burning in the St. Louis metropolitan area from April 15 to Sept. 15. Botanical nursery operations (greenhouses) are not considered agricultural operations.

Open Burning in Land Clearing Operations

Open burning of tree trunks, tree limbs and vegetation from land clearing operations is allowed without an ACD or permit in the outstate area if the burning takes place outside the city limits of any incorporated area or municipality and at least 200 yards from the nearest inhabited dwelling. Materials such as tires or used oil may not be used to start the fires or be burned in the fires. Permits containing special conditions may be issued by regional offices or local agencies for sites unable to comply with the requirements above. See the Required Open Burning Permits section below for exceptions in the Springfield-Greene County area, and Kansas City and St. Louis Metropolitan areas.

Open Burning at Wood Processing Facilities

Open burning of untreated wood waste from wood processing facilities is allowed if production is less than 8,000 board-feet per day and the facility was in existence as of March 25, 1976, but has not relocated to a new site. The burning also must be done at least 200 yards from the nearest occupied structure.

Open burning of untreated wood waste from wood processing facilities is allowed if production is less than 8,000 board-feet per day and the facility has relocated or from new wood processing facilities not in existence as of Sept. 18, 1970, and the facility and the burning are at least one mile outside city limits. The burning also must be done at least 200 yards from the nearest occupied structure.

Open Burning for Recreational Purposes

Campfires and other fires used solely for recreational purposes, ceremonial occasions or for outdoor noncommercial preparation of food are allowed in Missouri. Fires shall include only vegetative woody materials or untreated wood products.

Required Open Burning Permits

The open burning of certain trade wastes, primarily untreated wood wastes such as pallets or crates, throughout the state, and vegetation from land clearing operations in the Springfield-Greene County area and the Kansas City and St. Louis Metropolitan areas, may be permitted only when it can be shown that open burning is the only feasible method of disposal and that disposal is in the public interest. In the St. Louis nonattainment area, permits will not be issued

unless it can be shown that emissions from open burning would be less than any other waste management or disposal method. The open burning permit requires the facility, in most cases, to use an air curtain destructor.

Commercial and municipal utility tree trimming operations must submit a request to the appropriate regional office for an annually renewable open burning permit. The request must describe the general size, condition and age of the tree trunks and tree limbs to be open burned. Air curtain destructors are generally required at dedicated sites where burning occurs.

Commercial and municipal utility tree trimming operations must submit an application for an open burning permit to the appropriate regional office or local agency.

The information provided in this fact sheet should not be construed to permit open burning that causes or constitutes a public health hazard, nuisance or a hazard to vehicular or air traffic or violates any other rule or statute.

Definitions

St. Louis metropolitan area: The geographical area comprising St. Louis, St. Charles, Jefferson and Franklin Counties and the city of St. Louis. These counties are also currently a nonattainment area for ground-level ozone.

Springfield-Greene County area: The geographical area contained within Greene County.

Kansas City metropolitan area: The geographical area comprising Jackson, Cass, Clay, Platte, Ray and Buchanan counties.

Outstate area: The geographical area comprising those counties not contained in the St. Louis metropolitan area, the Springfield-Greene County area or the Kansas City metropolitan area.

Air Curtain Destructor: An air pollution control device designed to increase burning efficienc, reducing air contaminant emissions during open burning.

Open Burning Permit: A permit that must be applied for and then granted in order to open burn or open burn with restrictions. Permit applications must be sent to the Regional Office or local agency that has jurisdiction over your area. Applications are available at www.dnr.mo.gov/forms or any regional or local agency office.

Untreated Wood: Lumber and other wooden materials that have not been chemically treated for resistance to moisture, fire, fungi, insects and other pests or has not otherwise been treated or manufactured with chemicals, or that does not contain adhesives or resins. Untreated wood does not include plywood, particleboard, chipboard or wood with other than minimal amounts of paint, coating or finish.

For More Information

Missouri Department of Natural Resources
Air Pollution Control Program
P.O. Box 176, Jefferson City, MO 65102-0176
1-800-361-4827 or (573) 751-4817 office
(573) 751-2706 fax
www.dnr.mo.gov/env/apcp/index.html

Missouri Department of Natural Resources
Solid Waste Management Program
P.O. Box 176, Jefferson City, MO 65102-0176
1-800-361-4827 or (573) 751-5401 office
(573) 526-3902 fax
www.dnr.mo.gov/env/swmp/index.html

APPENDIX K

NOTICE OF TERMINATION (NOT)

FORM H

MISSOURI DEPARTMENT OF NATURAL RESOURCES
WATER PROTECTION PROGRAM, WATER POLLUTION BRANCH
(SEE MAP FOR APPROPRIATE REGIONAL OFFICE)

FORM H - REQUEST FOR TERMINATION OF A GENERAL PERMIT

UNDER MISSOURI CLEAN WATER LAW

1.00 TYPE OF GENERAL PERMIT REQUESTED TO BE TERMINATED

1.10 PERMIT NUMBER

MO —

2.00 FACILITY

NAME		COUNTY	
ADDRESS	CITY	STATE	ZIP CODE

3.00 OWNER

NAME	E-MAIL	PHONE	
		FAX	
ADDRESS	CITY	STATE	ZIP

4.00 CONTINUING AUTHORITY

NAME		PHONE	
		FAX	
ADDRESS	CITY	STATE	ZIP

5.00 REASON FOR TERMINATION REQUEST: (CHECK ONE)

☐ For land disturbance sites, area is stabilized by seeding, mulching, sodding, paving, or other means, no further land disturbance activities are planned, all building construction (commercial or residential) is completed, and construction equipment removed.

☐ For industrial facilities, site activities have ceased and site closed and no significant materials remain exposed to storm water.

☐ For any type of site, a site specific permit was obtained.

☐ Other reason (specify) _____

_____

_____

6.00 I CERTIFY THAT I AM FAMILIAR WITH THE INFORMATION CONTAINED IN THE TERMINATION REQUEST, THAT TO THE BEST OF MY KNOWLEDGE AND BELIEF SUCH INFORMATION IS TRUE, COMPLETE AND ACCURATE.

NAME AND OFFICIAL TITLE (TYPE OR PRINT)	TELEPHONE NO. ( ) (AREA CODE)
SIGNATURE	DATE SIGNED

APPENDIX L

CITY WIDE NATIONAL POLLUTANT DISCHARGE ELIMINATION SYSTEM STORM WATER DISCHARGE GENERAL PERMIT

CITY OF JOPLIN
MOR100050, Jasper

STATE OF MISSOURI

Jeremiah W. (Jay) Nixon, Governor • Sara Parker Pauley, Director

DEPARTMENT OF NATURAL RESOURCES

www.dnr.mo.gov

OCT 16 2014

City of Joplin
602 S. Main Street
Joplin, MO 64801

Dear City of Joplin:

Enclosed please find your Missouri State Operating Permit which authorizes land disturbance activities for City of Joplin. This permit has been issued at your request and is based upon information submitted in your application to the department.

Please note that prior to the beginning of land disturbance activities other permits may also be required. Especially note the requirements for a Missouri Department of Natural Resources 401 Water Quality Certification and the U.S. Army Corps of Engineers 404 permit. A 401 Certification is needed when placing material, or fill, into the jurisdictional waters of the Unites States. Examples are culverts under road crossings, riprap along stream banks and storm water outfall pipes. The term jurisdictional waters refers to large lakes, rivers, streams and wetlands, including those that don't always contain water.

The permitting and certification process is shared between the department and the U.S. Army Corps of Engineers. More details can be found at the US Army Corps of Engineer's Website at http://www.usace.army.mil/. Some of these activities are also described on page 2, item 3 of the enclosed permit.

This permit contains several requirements and should be thoroughly read and understood by you. If your permit requires environmental monitoring, copies of the necessary forms have been enclosed. In all future correspondence regarding your permit please reference your permit number as shown on page 1 of the permit.

Please contact the Water Pollution Enforcement and Compliance Unit if you would like to schedule an Environmental Assistance Visit (EAV) at 573-751-1300. During the visit, staff will review the requirements of the permit and answer any questions that you may have. Staff will also be available to walk the site to advise on Best Management Practices required by the permit. The department's regional office staff may also contact you to schedule an EAV.

If you were adversely affected by this decision, you may be entitled to an appeal before the administrative hearing commission pursuant to 10 CSR 20-1.020 and Sections 644.051.6 and 621.250, RSMo. To appeal, you must file a petition with the administrative hearing commission within thirty days after the date this decision was mailed or the date it was delivered, whichever date was earlier. If any such petition is sent by registered mail or certified mail, it will be deemed filed on the date it is mailed; if it is sent by any method other than registered mail or certified mail, it will be deemed filed on the date it is received by the administrative hearing commission. Contact information for the AHC is as follows: Administrative Hearing Commission, Truman State Office Building, Room 640, 301 W. High Street, P.O. Box 1557, Jefferson City, MO 65102, Phone: 573-751-2422, Fax: 573-751-5018, Website: www.oa.mo.gov/ahc.

Please be aware that this facility may also be subject to any applicable county or other local ordinances or restrictions.

Sincerely,

WATER PROTECTION PROGRAM

John Madras

John Madras
Director

JM/sm

Enclosure

STATE OF MISSOURI
DEPARTMENT OF NATURAL RESOURCES
MISSOURI CLEAN WATER COMMISSION

MISSOURI STATE OPERATING PERMIT

General Operating Permit

In compliance with the Missouri Clean Water Law, (Chapter 644 R.S. Mo as amended, hereinafter, the Law), and the Federal Water Pollution Control Act (Public Law 92-500, 92nd Congress) as amended,

Permit No:	MOR100050
Owner:	CITY OF JOPLIN
Address:	602 S. MAIN STREET JOPLIN, MO 64801
Continuing Authority:	CITY OF JOPLIN 602 S. MAIN STREET JOPLIN, MO 64801
Facility Name:	CITY OF JOPLIN
Facility Address:	602 S. MAIN STREET JOPLIN, MO 64801
Legal Description:	SE 1/4, SE 1/4, Sec. 03, T27N, R33W, Jasper County
UTM Coordinates:	365478.661/4105416.451
Receiving Stream:	Tributary to Joplin Creek (U)
First Classified Stream - ID#:	Turkey Cr. (P) 303(d) 3216.00
USGS# and Sub Watershed#:	11070207 - 0901

is authorized to discharge from the facility described herein, in accordance with the effluent limitations and monitoring requirements as set forth herein.

FACILITY DESCRIPTION All Outfalls SIC #1629

All Outfalls - Construction or land disturbance activity (e.g., clearing, grubbing, excavating, grading and other activity that results in the destruction of the root zone and/or land disturbance activity that is reasonably certain to cause pollution of waters of the state)

This permit authorizes only wastewater, including storm water, discharges under the Missouri Clean Water Law and the National Pollutant Discharge Elimination System, it does not apply to other regulated areas. This permit may be appealed in accordance with RSMo Section 644.051.6 and 621.250, 10 CSR 20-6.020, and 10 CSR 20-1.020.

October 16, 2014
Issue Date

Sara Parker Pauley
Sara Parker Pauley, Director
Department of Natural Resources

May 30, 2017
Expiration Date

John Madras
John Madras
Director, Water Protection Program

A. APPLICABILITY

1. This general permit authorizes the discharge of stormwater and certain non-stormwater discharges from land disturbance sites that disturb one or more acres of land or disturb less than one acre when part of a larger common plan of development or sale that will disturb a cumulative total of one or more acres over the life of the project.

   This general permit also authorizes the discharge of stormwater and certain non-stormwater discharges from smaller projects where the Missouri Department of Natural Resources (Department) has exercised its discretion to require a permit [10 CSR 20-6.200 (1)(B)].

   This general permit is issued to a city, county, state or federal agency or other governmental jurisdiction for land disturbance projects performed by or under contract to the permittee. A stormwater control plan or stormwater pollution prevention plan (SWPPP) must be developed prior to issuance of this permit. These plans must include a narrative of the types and appropriate uses of Best Management Practices (BMPs) for erosion and sediment control and stormwater management.

   All water pollution controls on land disturbance sites shall conform to the storm water control program and/or SWPPP of the city, county or other governmental jurisdiction in which the land disturbance activity is occurring. These storm water control programs and/or SWPPPs shall be developed prior to permit issuance. The requirements of the stormwater control program and/or SWPPP must be at least as stringent as those described in this permit and 10 CSR 20-6.200. If the permittee is a regulated municipal separate stormwater system (MS4), the stormwater program and/or SWPPP must comply with the permittee's MS4 permit. The Department may enforce the requirements of the stormwater program and/or SWPPP.

   All projects covered under this permit must also be identified as part of the Missouri State Operating Permit covered area and must have a SWPPP developed specific to the project site. The site specific SWPPP shall be developed prior to removal of any vegetation or site disturbance. This SWPPP must contain all the SWPPP requirements of this permit.

   Any site owner/operator subject to these requirements for stormwater discharges and who disturbs land *prior* to permit issuance from the Department or prior to the development of the SWPPP is in violation of both State and Federal Laws.

   The legal owner of the property, the right-of-way or the easement on which the site is located and the operator are responsible for compliance with this permit.

2. This permit authorizes discharges from construction support activities (e.g., concrete or asphalt batch plants, equipment staging yards, material storage areas, excavated material disposal areas, borrow areas) provided that appropriate stormwater controls are designed, installed, maintained and provided:
   a. The support activity is directly related to the construction site required to have permit coverage for stormwater discharges;
   b. The support activity is not a commercial operation; and
   c. The support activity does not continue to operate beyond the completion of the construction activity at the project it supports.

   It is the permittee that is responsible for compliance with this permit for any construction support activities.

3. This permit authorizes non-stormwater discharges from the following activities provided that these discharges are addressed in the SWPPP required by this general permit:
   a. De-watering activities if there are no contaminants other than sediment present in the discharge, and the discharge is treated as specified in Requirements, Section C.10.1. of this permit;
   b. Flushing water hydrants and potable water lines;
   c. Water only (i.e., without detergents or additives) rinsing of streets and buildings; and
   d. Site watering to establish vegetation.

4. This general permit does not authorize the placement of fill materials in flood plains, the obstruction of stream flow, directing stormwater across private property not owned or operated by the permittee, or changing the channel of a defined drainage course. This general permit addresses only the quality of the stormwater runoff and the minimization of off-site migration of sediments and other water contaminants.

5. This general permit does not authorize any discharge to waters of the state of sewage or pollutants including but not limited to:
   a. Any hazardous material, oil, lubricant, solid waste or other non-naturally occurring substance from the site, including fuels, oils, or other pollutants used in vehicle and equipment operation and maintenance;
   b. Soaps or solvents used in vehicle and equipment washing;
   c. Hazardous substances or petroleum products from an on-site spill or handling and disposal practices,
   d. Wash and/or rinse waters from concrete mixing equipment including ready mix concrete trucks, unless managed by an appropriate control. Any such pollutants must be adequately treated and addressed in the SWPPP, and cannot be discharged to waters of the state;
   e. Wastewater from washout and cleanout of stucco, paint, form release oils, curing compounds and other construction materials;
   f. Wastewater generated from air pollution control equipment or the containment of scrubber water in lined ponds;
   g. Domestic wastewaters, including gray waters; or
   h. Industrial stormwater runoff.

6. The Department reserves the right to revoke or deny coverage under this general permit to applicants for stormwater discharges from land disturbance activities at sites that have contaminated soils that will be disturbed by the land disturbance activity or where such materials are brought to the site to use as fill or borrow. A site-specific permit may be required to cover such activities.

7. If Department may require any person authorized by a general permit to apply for and obtain an individual operating permit [10 CSR 20-6.010 (13) (C)].

   The Department may require the permittee to apply for and obtain a site-specific or different general permit if:
   a. The permittee is not in compliance with the conditions of this general permit;
   b. The discharge no longer qualifies for this general permit due to changed site conditions and/or regulations; or
   c. Information becomes available that indicates water quality standards have been or may be violated.

8. The permittee will be notified in writing of the requirement to apply for a site-specific permit or a different general permit. When a site-specific permit or different general permit is issued to the authorized permittee, the applicability of this general permit to the permittee is automatically terminated upon the effective date of the site specific or different general permit.

9. Any owner/operator authorized by a general permit may request to be excluded from the coverage of the general permit and apply for a site-specific permit [10 CSR 20-6.010 (13)(D)].

10. This permit does not authorize land disturbance activity in jurisdictional waters of the United States as defined by the Army Corps of Engineers, unless the permittee has obtained the required 404/401 permit. Land disturbance activities may not begin in the affected portions of the site until the required 404/401 permits have been obtained.

11. This permit does not supersede compliance with the Historic Preservation Act or the Endangered Species Act.

12. This permit does not supersede any requirement for obtaining project approval under an established local authority.

13. This permit is not transferable to other owners or operators.

B. EXEMPTIONS FROM PERMIT REQUIREMENTS

1. Facilities that discharge all stormwater runoff directly to a combined sewer system are exempt from stormwater permit requirements.

2. Land disturbance activity as described in [10 CSR 20-6.200 (1) (B)] and [10 CSR 20-6.010 (1) (B)] where water quality standards are not exceeded.

3. Linear, strip, or ribbon construction (as described in [10 CSR 20-6.200 (1) (B) 8]) where water quality standards are not exceeded.

4. Sites that disturb less than one acre of total land area as described in [10 CSR20-6.200 (1)(B)7], that are not part of a common plan or sale and that do not cause any violations of water quality standards, and are not otherwise designated by the Department as requiring a permit.

5. Agricultural stormwater discharges and irrigation return flows as described in [10CSR 20-6.200 (1) (B) 6].

C. REQUIREMENTS

These requirements do not supersede nor remove any requirement to comply with county or other local ordinances [10 CSR20-6.010(14) (D)]:

1. This permit is to ensure the design, the installation and the maintenance of effective erosion controls and sediment controls to minimize the discharge of pollutants. At minimum, such controls must be designed, installed and maintained to:
   a. Control stormwater volume and velocity within the site to minimize soil erosion;
   b. Control stormwater discharges, including both peak flow rates and total stormwater volume, to minimize erosion at outlets and to minimize downstream channel and stream bank erosion;
   c. Minimize the amount of soil exposed during construction activity;
   d. Minimize the disturbance of steep slopes;

e. Minimize sediment discharges from the site. The design, installation and maintenance of erosion and sediment controls must address factors such as the amount, frequency, intensity and duration of precipitation, the nature of resulting stormwater runoff, and soil characteristics, including the range of soil particle size expected to be present on the site.;
f. Provide and maintain natural buffers around surface waters, direct stormwater to vegetated areas to increase sediment removal and maximize stormwater infiltration, unless infeasible; and
g. Minimize soil compaction and, unless infeasible, preserve topsoil.

2. The primary requirement of this permit is the development and implementation of a SWPPP which incorporates site specific practices to best minimize the soil exposure, soil erosion, and the discharge of pollutants. The permittee shall fully implement the provisions of the SWPPP required under this part as a condition of this general permit throughout the term of all land disturbance projects covered under this permit.

3. The permittee must inspect all land disturbance sites as described in C.13 of this permit.

4. The permittee shall provide a list of active land disturbance sites to the Department on a quarterly basis. The list shall contain the name of the project, location (including the County), name of the primary receiving water(s) for each project, description of the project, number of acres disturbed, percent completion of the project and projected date of completion. The permittee shall submit quarterly reports each January, April, July and October. The Department must receive reports by the end of the specified month.

5. The permittee is required to keep a current copy of the SWPPP at an easily accessible location so that it can be made available at the time of an onsite inspection by the Department or local agency approving stormwater management plans.

   The SWPPP must:
   a. List and describe all outfalls or primary receiving water(s) for the project;
   b. Incorporate required practices identified below;
   c. Incorporate erosion control practices specific to site conditions;
   d. Provide for maintenance and adherence to the plan;
   e. Discuss whether or not a 404/401 Permit is required for the project; and
   f. Name the person responsible for inspection, operation and maintenance of BMPs.

   The purpose of the SWPPP is to ensure; the design, implementation, management and maintenance of Best Management Practices (BMPs) in order to prevent sediment and other pollutants in stormwater discharges associated with the land disturbance activities; compliance with the Missouri Water Quality Standards; and compliance with the terms and conditions of this general permit.

   The permittee shall select, install, use, operate and maintain appropriate BMPs for the permitted site. The following manuals are acceptable resources for the selection of appropriate BMPs.

   Developing Your Stormwater Pollution Prevention Plan: A Guide for Construction Activities (Document number EPA 833-R-06-004) published by the United States Environmental Protection Agency (USEPA) in May 2007. This manual as well as other information, including examples of construction SWPPPs, is available at the USEPA internet site at http://cfpub1.epa.gov/npdes/stormwater/swppp.cfm; and

The latest version of *Protecting Water Quality: A field guide to erosion, sediment and stormwater best management practices for development sites in Missouri,* published by the Missouri Department of Natural Resources. This manual is available on the Department's internet site at: http://www.dnr.mo.gov/env/wpp/wpcp-guide.htm.
The permittee is not limited to the use of these guidance manuals. Other guidance publications may be used to select appropriate BMPs. However, all BMPs should be described and justified in the SWPPP.

6. SWPPP Requirements: The following information and practices shall be provided for in the SWPPP:
   a. Nature of the Construction Activity: The SWPPP briefly must describe the nature of the construction activity, including:
      1) The function of the project (e.g., low density residential, shopping mall, highway, etc.);
      2) The intended sequence and timing of activities that disturb the soils at the site;
      3) Estimates of the total area expected to be disturbed by excavation, grading, or other construction activities including off-site borrow and fill areas; and
      4) A general map (e.g., United States Geological Survey quadrangle map, a portion of a city of county map, or other map) with enough detail to identify the location of the construction site and waters of the United States within one mile of the site.

   b. Site Map: The SWPPP must contain a legible site map showing the site boundaries and outfalls and identifying:
      1) Direction(s) of stormwater flow and approximate slopes anticipated after grading activities;
      2) Areas of soil disturbance and areas that will not be disturbed (or a statement that all areas of the site will be disturbed unless otherwise noted);
      3) Location of major structural and non-structural BMPs identified in the SWPPP;
      4) Locations where stabilization practices are expected to occur;
      5) Locations of off-site material, waste, borrow or equipment storage areas;
      6) Locations of all waters of the United States (including wetlands);
      7) Locations where stormwater discharges to a surface water; and
      8) Areas where final stabilization has been accomplished and no further construction-phase permit requirements apply.

   c. Site Description: In order to identify the site, the SWPPP shall include facility and receiving water(s) information. The SWPPP shall have sufficient information to be of practical use to contractors and site construction workers to guide the installation and maintenance of BMPs.

   d. Effluent Limits: The permittee must select control measurements (e.g., BMPs, controls, practices, etc.) to meet effluent limits found in Section E.1. of this permit. All control measures must be properly selected, installed and maintained in accordance with any relevant manufacturer specifications and good engineering practices to ensure stormwater outfall discharges do not cause water quality problems. The permittee must implement the control measures from commencement of the construction activity until final stabilization is complete unless the exception noted in Section C.6.i. of this permit applies.

   e. Selection of Temporary and Permanent Non-Structural BMPs: The permittee shall select appropriate non-structural BMPs for use at the site and list them in the SWPPP. The SWPPP shall require existing vegetation to be preserved where practical. For surface waters located on or immediately adjacent to the site, the permittee must provide at minimum a 25-foot buffer of undisturbed natural vegetation between the disturbed portions of the site and the surface water unless infeasible or where there is a more stringent local requirement. The buffer is measured perpendicularly from the ordinary high water mark or the bank edge, whichever is further landward from the water. The time period for disturbed areas to be without vegetative cover is to be minimized to the maximum extent practicable.
   Examples of non-structural BMPs which the permittee should consider specifying in the SWPPP include preservation of trees and mature vegetation, protection of existing vegetation

for use as buffer strips, mulching, sodding, temporary seeding, final seeding, geotextiles, stabilization of disturbed areas, preserving existing stream channels as overflow areas when channel straightening or shortening is allowed, soil stabilizing emulsions and tackifiers, mulch tackifiers, stabilized site entrances/exits and other appropriate BMPs.

f. Selection of Temporary and Permanent Structural BMPs: The permittee shall select appropriate structural BMPs for use at the site and list them in the SWPPP. Examples of structural BMPs that the permittee should consider specifying in the SWPPP include diverting flows from undisturbed areas away from disturbed areas, silt (filter fabric and/or straw bale) fences, earthen diversion dikes, drainage swales, sediment traps, rock check dams, subsurface drains (to gather or transport water for surface discharge elsewhere), pipe slope drains (to carry concentrated flow down a slope face), level spreaders (to distribute concentrated flow into sheet flow), storm drain inlet protection and outlet protection, reinforced soil retaining systems, gabions, temporary or permanent sediment basins and other appropriate BMPs.

g. Description of BMPs: The SWPPP shall include a description of both structural and non-structural BMPs that will be used at the site.

The SWPPP shall provide the following general information for each BMP which will be used one or more times at the site:

1) Physical description of the BMP;
2) Site and physical conditions that must be met for effective use of the BMP;
3) BMP installation/construction procedures, including typical drawings; and
4) Operation and maintenance procedures for the BMP.

The SWPPP shall provide the following information for each specific instance where a BMP is to be installed:

1) Whether the BMP is temporary or permanent;
2) Where, in relation to other site features, the BMP is to be located;
3) When the BMP will be installed in relation to each phase of the land disturbance procedures to complete the project; and
4) Site conditions that must be met before removal of the BMP if the BMP is not a permanent BMP.

h. Disturbed Areas: Slopes for disturbed areas must be defined in the SWPPP. A site map or maps defining the sloped areas for all phases of the project must be included in the SWPPP.

Temporary stabilization is to take place where soil disturbing activities will cease on any portion of the site and are not planned to resume for a period exceeding 14 calendar days. Temporary stabilization must be initiated immediately upon knowing the duration is more than 14 days. Temporary stabilization must be completed within 7 calendar days. Temporary stabilization shall consist of well-established and maintained BMPs that are reasonably certain to protect waters of the state from sediment pollution over an extended period of time. This may require adding more BMPs to an area than is normally used during daily operations. These BMPs may include a combination of sediment basins, check dams, sediment fences and mulch. The types of BMPs used must be suited to the area disturbed, taking into account the number of acres exposed and the steepness of the slopes. If the slope of the area is greater than 3:1 (3 feet horizontal to one foot vertical) or if the slope is greater than 3% and greater than 150 feet in length, then the permittee shall establish temporary stabilization within seven days of ceasing operations on that part of the site.

Final stabilization of disturbed areas must be initiated immediately and completed within 7 calendar days whenever any clearing, grading, excavating or other earth disturbing activities have permanently ceased on any portion of the site.

Allowances to the 7 day completion period for temporary and final stabilization may be made due to weather and equipment malfunctions. The use of allowances shall be documented in the SWPPP.

i. Installation: The permittee shall ensure the BMPs are properly installed at the locations and relative times specified in the SWPPP. Peripheral or border BMPs to control runoff from disturbed areas shall be installed or marked for preservation before general site clearing is started. Note that this requirement does not apply to earth disturbances related to initial site clearing and establishing entry, exit and access of the site, which may require that stormwater controls be installed immediately after the earth disturbance. Stormwater discharges from disturbed areas which leave the site shall pass through an appropriate impediment to sediment movement such as a sedimentation basin, sediment traps and silt fences prior to leaving the land disturbance site. A drainage course change shall be clearly marked on a site map and described in the SWPPP. The location of all BMPs must be indicated on a site map, included in the SWPPP.

j. Sedimentation Basins: The SWPPP shall include a sedimentation basin for each drainage area with ten or more acres disturbed at one time. The sedimentation basin shall be sized to contain a volume of at least 3,600 cubic feet per each disturbed acre draining thereto. Accumulated sediment shall be removed from the basin when basin is 50% full. When discharging from basins and impoundments, utilize outlet structures that withdraw water from the surface unless infeasible. Discharges from the basin shall not cause scouring of the banks or bottom of the receiving stream. The SWPPP shall require the basin be maintained until final stabilization of the disturbed area served by the basin.

Where use of a sediment basin is impractical, the SWPPP shall evaluate and specify other similarly effective BMPs to be employed to control erosion and sediment delivery. These similarly effective BMPs shall be based on good engineering practices. The BMPs must provide equivalent water quality protection to achieve compliance with this permit. The SWPPP shall require both temporary and permanent sedimentation basins to have a stabilized spillway to minimize the potential for erosion of the spillway or basin embankment.

k. Pollution Prevention Measures: The SWPPP shall include BMPs for pollution prevention measures. At minimum such measures must be designed, installed, implemented and maintained to:
   1) Minimize the discharge of pollutants from equipment and vehicle washing, wheel wash water, and other wash waters. Wash waters must be treated in a sediment basin or alternative control that provides equivalent or better treatment prior to discharge ;
   2) Minimize the exposure of building materials, building products, construction wastes, trash, landscape materials, fertilizers, pesticides, herbicides, detergents, sanitary waste, and other materials present on the site to precipitation and to stormwater; and
   3) Minimize the discharge of pollutants from spills and leaks and implement chemical spill and leak prevention and response procedures. Included but not limited to the installation of containment berms and use of drip pans at petroleum product and liquid storage tanks and containers.

l. Dewatering: Discharges from dewatering activities, including discharges from dewatering of trenches and excavations, are prohibited unless managed by appropriate controls. The SWPPP shall include a description of any anticipated dewatering methods including the anticipated volume of water to be discharged and the anticipated maximum flow discharged from these dewatering activities expressed in gallons per minute. Maximum flow may be stated in the SWPPP as an estimate based on the type and capacity of equipment being used for dewatering. The SWPPP shall call for specific BMPs designed to treat water pumped from trenches and excavations and in no case shall this water be pumped off-site without being treated by the specified BMPs. When discharging from basins and impoundments utilize outlet structures that withdraw water from the surface, unless infeasible.

m. Roadways: Where applicable, upon installation of or connection to roadways, all efforts should be made to prevent the deposition of earth and sediment onto roadways through the use of proper BMPs. Stormwater inlets susceptible to receiving sediment from the permitted land disturbance site shall have curb inlet protection. Where stormwater will flow off the end of where a roadway terminates, a sediment catching BMP such as gravel berm or silt fence shall be provided. Roadways and curb inlets shall be inspected weekly or following a rainfall that generates a run-off and cleaned as necessary to maintain a clean roadway and drainage system. Where practicable, construction entrance BMP controls shall be used to prevent sediment track-out.

7. Good housekeeping practices shall be maintained at all times to keep waste from entry into waters of the state. Solid and hazardous waste management include providing trash containers and regular site clean-up for proper disposal of solid waste such as scrap building material, product/material shipping waste, food containers and cups, and providing containers and proper disposal of waste paints, solvents and cleaning compounds. The provision of portable toilets for proper disposal of sanitary sewage and the storage of construction materials should be kept away from drainage courses and low areas.

8. All fueling facilities present shall at all times adhere to applicable federal and state regulations concerning underground storage, above ground storage and dispensers.

9. Hazardous wastes that are transported, stored, or used for maintenance, cleaning, or repair shall be managed according to the provisions of the Missouri Hazardous Waste Laws and Regulations.

10. All paint, solvents, petroleum products, petroleum waste products and storage containers such as drums, cans, or cartons shall be stored according to BMPs. The materials exposed to precipitation shall be stored in watertight, structurally sound, closed containers. All containers shall be inspected for leaks or spillage during the once per week inspection of BMPs.

11. Amending/Updating the SWPPP: The permittee shall amend and update the SWPPP as appropriate during the term of the land disturbance activity. The permittee shall amend the SWPPP at a minimum whenever the:
    a. Design, operation, or maintenance of BMPs is changed;
    b. Design of the construction project is changed that could significantly affect the quality of the stormwater discharges;
    c. Permittee's inspections indicate deficiencies in the SWPPP or any BMP;
    d. The Department notifies the permittee in writing of deficiencies in the SWPPP;
    e. SWPPP is determined to be ineffective in minimizing or controlling erosion and sedimentation (e.g., there is visual evidence of excessive site erosion or excessive sediment deposits in streams or lakes);
    f. Settleable Solids from a stormwater outfall exceed 2.5 ml/L; and
    g. The Department determines violations of water quality standards may occur or have occurred.

12. An individual shall be designated by the permittee as responsible for environmental matters. The individual responsible for environmental matters shall have a thorough and demonstrable knowledge of the site's SWPPP and sediment and erosion control practices in general. The individual responsible for environmental matters or a designated inspector knowledgeable in erosion, sediment and stormwater control principles shall inspect all structures that function to prevent pollution of waters of the state including those for material, waste, borrow, or equipment storage and maintenance areas that are covered by this permit. These inspections shall be conducted in accordance with No. 13 of these requirements.

13. Site Inspection Reports: The permittee (or a representative of the permittee) shall conduct regularly scheduled inspections at least once per seven calendar days. These inspections shall be conducted by a qualified person, one who is responsible for environmental matters at the site, or a person trained by and directly supervised by the person responsible for environmental matters at the site. For disturbed areas that have not been finally stabilized, all installed BMPs and other pollution control measures shall be inspected for proper installation, operation and maintenance. All stormwater outfalls shall be inspected for evidence of erosion or sediment deposition. When practicable the receiving stream shall also be inspected for 50 feet downstream of the outfall. Any structural or maintenance problems shall be noted in an inspection report and corrected within seven calendar days of the inspection. If a rainfall causes stormwater runoff to occur on-site, the BMPs must be inspected. These inspections must occur within 48 hours after the rain event has ceased during a normal work day and within 72 hours on the next business day if the rain event ceases during a non-work day such as a weekends or holiday. The total rainfall measured for that day must be recorded. A properly maintained rain gauge must be kept on site or the storm event information may be obtained from a weather station that is representative of your location.

    The SWPPP must explain how the person responsible for erosion control will be notified when stormwater runoff occurs. If weather conditions prevent correction of BMPs within 7 calendar days, the reasons for the delay must be documented (including pictures) and there must be a narrative explaining why the work cannot be accomplished within the 7 day time period. The documentation must be filed with the regular inspection reports. The permittee shall correct the problem as soon as weather conditions allow.

    A log of each inspection and a current copy, of all the inspection reports shall be kept at the site or at an easily accessible location so that it can be made available at the time of an on-site inspection or at the request of the Department. The inspection report shall be signed by the permittee or by the person performing the inspection if duly authorized to do so. The inspection report is to include the following minimum information:
    a. Inspector's name;
    b. Date of inspection;
    c. Observations relative to the effectiveness of the BMPs;
    d. Actions taken or necessary to correct the observed problem; and
    e. Listing of areas where land disturbance operations have permanently or temporarily stopped.

14. Proper Operation and Maintenance: The permittee shall at all times maintain all pollution control measures and systems in good order to achieve compliance with the terms of this general permit.

15. Notification to All Contractors: The permittee shall be responsible for notifying each contractor or entity (including utility crews and city employees or their agents) that will perform work at the site of the existence of the SWPPP and what action or precautions shall be taken while on-site to minimize the potential for erosion and the potential for damaging any BMP. The permittee is responsible for any damage a subcontractor may do to established BMPs and any subsequent water quality violation resulting from the damage.

16. Public Notification: The permittee shall post a copy of the public notification sign described by the Department at the main entrance to the site. The public notification sign must be visible from the public road that provides access to the site's main entrance. An alternate location is acceptable provided the public can see it and it is noted in the SWPPP. The public notification sign must remain posted at the site until the permit has been terminated.

D. OTHER DISCHARGES

1. Hazardous Substance and Oil Spill Reporting: Refer to Section B, #14 of Part I of the Standard Conditions that accompany this permit.

2. Removed substances: Refer to Section B, #6 of Part I of the Standard Conditions that accompany this permit.

3. Change in discharge: In the event soil contamination or hazardous substances are discovered at the site during land disturbance activities, the permittee shall notify the Department's regional office by telephone as soon as practicable but no later than 24 hours after discovery. The permittee must also notify the Department's regional office in writing no later than 14 calendar days after discovery.

E. SAMPLING REQUIREMENTS AND EFFLUENT LIMITATIONS

1. Settleable Solids discharging from a stormwater outfall shall not exceed 2.5 ml/L per Standard Method 2540 F for storm events up to but not exceeding the local 2-year, 24-hour storm. The Settleable Solids limit does not apply during storm events that exceed the local 2-year, 24-hour storm.

2. The Department may require sampling and reporting as a result of illegal discharges, compliance issues, complaint investigations, or other such evidence of contamination from activities at the site. If such an action is needed, the Department will specify in writing any sampling requirements, including such information as location, extent and parameters.

F. RECORDS

1. The permittee shall retain copies of this general permit, the SWPPP and all amendments for the site named in the State Operating Permit, results of any monitoring and analysis and all site inspection records required by this general permit. The records shall be accessible during normal business hours. The records shall be retained for a period of at least three years from the date of the Letter of Termination.

2. The permittee shall provide a copy of the SWPPP to the Department, USEPA, or any local agency or government representative if they request a copy in the performance of their official duties.

3. The permittee shall ensure a copy of the SWPPP to those who are responsible for installation, operation, or maintenance of any BMP. The permittee, their representative, and/or the contractor(s) responsible for installation, operation and maintenance of the BMPs shall have a current copy of the SWPPP with them when on the project site.

G. LAND PURCHASE AND CHANGE OF OWNERSHIP

1. Federal and Missouri stormwater regulations [10 CSR 20-6.200] require a stormwater permit and erosion control measures for all land disturbances of one or more acres. These regulations also require a permit for less than one acre lots if the lot is part of a common plan of development or sale where that plan is at least one acre in size. If the permittee sells less than one acre of the permitted site to an entity for, commercial, industrial, or residential use, (unless sold to an individual for the purpose of building his/her own private residence and in accordance with No. 3 of this section) this land remains a part of the common sale and regulated by this permit. Therefore, the permittee is still responsible for erosion control on the sold property until termination of the permit.

2. If the permittee sells one or more acres of the permitted site to an entity, the new owner of the property must obtain a land disturbance permit for the purchased property. The original permittee must amend the SWPPP to show that the property (one acre or more) has been sold and therefore no longer under the original permit jurisdiction.

3. If the permittee has stabilized the less than one acre lot which is part of a larger common plan of development and the lot is sold to an individual for purposes of building his/her own private residence, the permittee is no longer responsible for erosion control on the lot.

4. Property of any size which is part of a larger common plan of development where the property has been stabilized and the original permit terminated will require application of a new land disturbance permit for any future land disturbance activity.

5. If the entire tract is sold to a single entity, then this permit shall be terminated when the new owner obtains a new land disturbance permit for the site.

H. TERMINATION

This permit may be terminated when the project is stabilized. The project is considered to be stabilized when perennial vegetation, pavement, buildings, or structures using permanent materials cover all areas that have been disturbed. With respect to areas that have been vegetated, vegetation cover shall be at least 70% plant density over 100% of the site. In order to terminate the permit, the permittee shall notify the Department.

The Cover Page (Certificate Page) of the Master General Permit for Land Disturbance specifies the "effective date" and the "expiration date" of the Master General Permit. The "issued date" along with the "expiration date" will appear on the State Operating Permit issued to the applicant. This permit does not continue administratively beyond the expiration date.

If the project or development completion date will be after the expiration date of this general permit, then the permittee must reapply to the Department for a new permit. The applicant must file a request to the Department for a new permit 180 days prior to the expiration of this permit.

If the permittee has not terminated the permit and the permit expires, and the permittee has not applied for a new permit the permittee will be consider "operating without a permit" if the site does not meet the requirements for termination.

I. MODIFICATION, REVOCATION, AND REOPENING

1. The U.S. Environmental Protection Agency (EPA) has proposed stormwater requirements that may direct the State to reopen this permit. The EPA is proposing to change its construction general permit (CGP) with more prescriptive requirements and design standards for buffers to prevent stormwater runoff, increased monitoring requirements and more frequent inspections. While the EPA permit is only effective in areas where EPA has permitting authority these requirements are likely to act as a template, setting a baseline for the agency's approval of state plans for permitting sites.

2. If at any time the Missouri Department of Natural Resources determines that the quality of waters of the state may be better protected by reopening this permit, or revoking this permit and requiring the owner/operator of the permitted site to apply for a site-specific permit, the Department may revoke a general permit and require any person to obtain such an operating permit as authorized by 10 CSR 20-6.010 (13) and 10 CSR 20-6.200(5).

3. If this permit is re-opened, modified or revoked pursuant to this Section, the permittee retains all rights under Chapter 536 and 644 Revised Statutes of Missouri upon the Department's reissuance of the permit as well as all other forms of administrative, judicial, and equitable relief available under law.

J. DUTY TO COMPLY

The permittee must comply with all conditions of this general permit. Any noncompliance constitutes a violation of the Clean Water Act and is grounds for enforcement action; for permit termination, revocation and reissuance, or modification; or denial of a permit renewal application.

STANDARD CONDITIONS FOR NPDES PERMITS
ISSUED BY
THE MISSOURI DEPARTMENT OF NATURAL RESOURCES
MISSOURI CLEAN WATER COMMISSION
Revised
October 1, 1980

PART I - GENERAL CONDITIONS
SECTION A - MONITORING AND REPORTING

1. **Representative Sampling**
   a. Samples and measurements taken as required herein shal be representative of the nature and volume, respectively, of the monitored discharge. All samples shall be taken at the outfall(s), and unless specified, before the effluent joins or is diluted by any other body of water or substance.
   b. Monitoring results shall be recorded and reported on forms provided by the Department, postmarked no later than the 28th dayof the month following the completed reporting period. Signed copies of these, and all other reports required herein, shal be submitted to the respective Department Regional Office, the Regional Office address is indicated in the cover letter transmitting the permit.

2. **Schedule of Compliance**
   No later than fourteen (14) calendar days following each date identified in the "Schedule of Compliance", the permittee shall submit to the respective Department Regional Office as required therein, either a repet of progress or, in the case of specific actions being required by identified dates, a written notice of compliance or noncompliance. In the latter case, the notice shall include the cause of noncompliance, any remedial actions taken, and the probability of meeting the next scheduled requirements, or if there are no more scheduled requirements, when such noncompliance will be corrected. The Regional Office address is indicated in the cover letter transmitting he permit.

3. **Definitions**
   Definitions as set forth in the Missouri Clean Water Law and Missouri Clean Water Commission Definition Regulation 10 CSR 20-2.010 shall apply to terms used herein.

4. **Test Procedures**
   Test procedures for the analysis of pollutant shall be in accordance with the Missouri Clean Water Commission Effluent Regulation 10 CSR 20-7015.

5. **Recording of Results**
   a. For each measurement or sample taken pursuant to the requirements of this permit, the permittee shall record the following information:
      (i) the date, exact place, and time of sampling or measurements;
      (ii) the individual(s) who performed the sampling or measurements;
      (iii) the date(s) analyses were performed;
      (iv) the individual(s) who performed the analyses;
      (v) the analytical techniques or methods used; and
      (vi) the results of such analyses.
   b. The Federal Clean Water Act provides that any person who falsifies, tampers with, or knowingly renders inaccurate anymonitoring device or method required to be maintained under this permit shall, upon conviction, be punished bya fine of not more than $10,000 per violation, or by imprisonment for not more than six (6) months per violation, or both.
   c. Calculations for all limitations which require averaging of measurements shall utilize an arithmetic mean unless otherwise specified by the Director in the permit.

6. **Additional Monitoring by Permittee**
   If the permittee monitors any pollutant at the location(s) designated herein more frequently than required bythis permit, using approved analytical methods as specified above, the results of such monitoring shall be included in the calculation and reporting of the values required in the Monitoring Report Form. Such increased frequencyshall also be indicated.

7. **Records Retention**
   The permittee shall retain records of all monitoring information, including all calibration and maintenance records and all original strip chart recording for continuous monitoring instrumentation, copies of all reports required by this permit, and records of all data used to complete the application for this permit, for a period of at least three (3) years from the date of the sample, measurement, report or application. This period may be extended by request of the Department at any time.

SECTION B - MANAGEMENT REQUIREMENTS

1. **Change in Discharge**
   a. All discharges authorized herein shall be consistent with the terms and conditions of this permit. The discharge of any pollutant not authorized by this permit or any pollutant identified in this permit more frequently than or at a level in excess of that authorized shall constitute a violation of the permit.
   b. Any facility expansions, production increases, or process modifications which will result in new, different, or increased discharges of pollutants shall be reported by submission of a new NPDES application at least sixty (60) days before each such changes, or, if they will not violate the effluent limitations specified in the permit, by notice to the Department at least thirty (30) days before such changes.

2. **Noncompliance Notification**
   a. If, for any reason, the permittee does not comply with or will be unable to comply with any daily maximum effluent limitation specified in this permit, the permittee shall provide the Department with the following information, in writing within five (5) days of becoming aware of such conditions:
      (i) a description of the discharge and cause of noncompliance, and
      (ii) the period of noncompliance, including exact dates and times or, if not corrected, the anticipated time the noncompliance is expected to continue, and steps beingtaken to reduce, eliminate and prevent `recurrence of the noncomplying discharge.
   b. Twenty-four hour reporting. The permittee shall report any noncompliance which may endanger health or the environment. Any information shall be provided orally with 24 hours from the time the permittee becomes aware of the circumstances. A written submission shall also be provided with five (5) days of the time the permittee becomes aware of the circumstances. The Department may waive the written report on a case-by-case basis if the oral report has been received within 24 hours.

3. **Facilities Operation**
   Permittees shall operate and maintain facilities to comply with the Missouri Clean Water Law and applicable permit conditions. Operators or supervisors of operations at publicly owned or publicly regulated wastewater treatment facilities shall be certified in accordance with 10 CSR 209.020(2) and any other applicable law or regulation. Operators of other wastewater treatment facilities, water contaminant source or point sources, shall, upon request by the Department, demonstrate that wastewater treatment equipment and facilities are effectively operated and maintained by competent personnel.

4. **Adverse Impact**
   The permittee shall take all necessary steps to minimize any adverse impact to waters of the state resulting from noncompliance with any effluent limitations specified in this permit or set forth in the Missouri Clean Water Law and Regulations (hereinafter the Law and Regulations), including such accelerated or additional monitoring as necessary to determine the nature and impact of the noncomplying discharge.

5. **Bypassing**
   a. Any bypass or shut down of a wastewater treatment facility and tributary sewer system or any part of such a facility and sewer system that results in a violation of permit limits or conditions is prohibited except:
      (i) where unavoidable to prevent loss of life, personal injury, or severe property damages; and
      (ii) where unavoidable excessive storm drainage or runoff would catastrophically damage any facilities or processes necessary for compliance with the effluent limitations and conditions of this permit;
      (iii) where maintenance is necessary to ensure efficient operation and alternative measures have been taken to maintain effluent quality during the period of maintenance.
   b. The permittee shall notify the Department in writing of all bypasses or shut down that result in a violation of permit limits or conditions. This section does not excuse any person from liability, unless such relief is otherwise provided by the statute.

6. **Removed Substances**
   Solids, sludges, filter backwash, or any other pollutants removed in the course of treatment or control of wastewaters shall be disposed of in a manner such as to prevent any pollutants from entering waters of the state unless permitted by the Law, and a permanent record of the date and time, volume and methods of removal and disposal of such substances shall be maintained by the permittee.

7. **Power Failures**
   In order to maintain compliance with the effluent limitations and other provisions of this permit, the permittee shall either:
   a. in accordance with the "Schedule of Compliance", provide an alternative power source sufficient to operate the wastewater control facilities; or,
   b. if such alternative power source is not in existence, and no date for its implementation appears in the Compliance Schedule, halt or otherwise control production and all discharges upon the reduction, loss, or failure of the primary source of power to the wastewater control facilities.

8. **Right of Entry**
   For the purpose of inspecting, monitoring, or sampling the point source, water contaminant source, or wastewater treatment facility for compliance with the Clean Water Law and these regulations, authorized representatives of the Department, shall be allowed by the permittee, upon presentation of credentials and at reasonable times;
   a. to enter upon permittee's premises in which a point source, water contaminant source, or wastewater treatment facility is located or in which any records are required to be kept under terms and conditions of the permit;
   b. to have access to, or copy, any records required to be kept under terms and conditions of the permit;
   c. to inspect any monitoring equipment or method required in the permit;
   d. to inspect any collection, treatment, or discharge facility covered under the permit; and
   e. to sample any wastewater at any point in the collection system or treatment process.

9. **Permits Transferable**
   a. Subject to Section (3) of 10 CSR 20-6.010 an operating permit may be transferred upon submission to the Department of an application to transfer signed by a new owner. Until such time as the permit is officially transferred, the original permittee remains responsible for complying with the terms and conditions of the existing permit.
   b. The Department, within thirty (30) days of receipt of the application shall notify the new permittee of its intent to revoke and reissue or transfer the permit.

10. **Availability of Reports**
    Except for data determined to be confidential under Section 308 of the Act, and the Law and Missouri Clean Water Commission Regulation for Public Participation, Hearings and Notice to Governmental Agencies 10 CSR 20-6.020, all reports prepared in accordance with the terms of this permit shall be available for public inspection at the offices of the Department. As required by statute, effluent data shall not be considered confidential. Knowingly making any false statement on any such report shall be subject to the imposition of criminal penalties as provided in Section 204.076 of the Law.

11. **Permit Modification**
    a. Subject to compliance with statutory requirements of the Law and Regulations and applicable Court Order, this permit may be modified, suspended, or revoked in whole or in part during its term for cause including, but not limited to, the following:
       (i) violation of any terms or conditions of this permit or the Law;
       (ii) having obtained this permit by misrepresentation or failure to disclose fully any relevant facts;
       (iii) a change in any circumstances or conditions that requires either a temporary or permanent reduction or elimination of the authorized discharge, or
       (iv) any reason set forth in the Law and Regulations.
    b. The filing of a request by the permittee for a permit modification, revocation and reissuance, or termination, or a notification of planned changes or anticipated noncompliance, does not stay any permit condition.

12. **Permit Modification - Less Stringent Requirements**
    If any permit provisions are based on legal requirements which are lessened or removed, and should no other basis exist for such permit provisions, the permit shall be modified after notice and opportunity for a hearing.

13. **Civil and Criminal Liability**
    Except as authorized by statute and provided in permit conditions on "Bypassing" (Standard Condition B-5) and "Power Failures" (Standard Condition B-7) nothing in this permit shall be construed to relieve the permittee from civil or criminal penalties for noncompliance.

14. **Oil and Hazardous Substance Liability**
    Nothing in this permit shall be construed to preclude the institution of any legal action or relieve the permittee from any responsibilities, liabilities, or penalties to which the permittee is or may be subject under Section 311 of the Act, and the Law and Regulations. Oil and hazardous materials discharges must be reported in compliance with the requirements of the Federal Clean Water Act.

15. **State Laws**
    Nothing in this permit shall be construed to preclude the institution of any legal action or relieve the permittee from any responsibilities, liabilities, or penalties established pursuant to any applicable state statute or regulations.

16. **Property Rights**
    The issuance of this permit does not convey any property rights in either real or personal property, or any exclusive privileges, no does it authorize any injury to private property or any invasion of personal rights, nor any infringement of or violation of federal, state or local laws or regulations.

17. **Duty to Reapply**
    If the permittee wishes to continue an activity regulated by this permit after the expiration date of this permit, the permittee must apply for a new permit 180 days prior to expiration of this permit.

18. **Toxic Pollutants**
    If a toxic effluent standard, prohibition, or schedule of compliance is established, under Section 307(a) of the Federal Clean Water Act for a toxic pollutant in the discharge of permittee's facility and such standard is more stringent than the limitations in the permit, then the more stringent standard, prohibition, or schedule shall be incorporated into the permit as one of its conditions, upon notice to the permittee.

19. **Signatory Requirement**
    All reports, or information submitted to the Director shall be signed (see 40 CFR-122.6).

20. **Rights Not Affected**
    Nothing in this permit shall affect the permittee's right to appeal or seek a variance from applicable laws or regulations as allowed by law.

21. **Severability**
    The provisions of this permit are severable, and if any provisions of this permit, or the application of any provision of this permit to any circumstance, is held invalid, the application of such provision to other circumstances, and the remainder of this permit, shall not be affected thereby.

Missouri
Department of
Natural Resources

STORMWATER DISCHARGES FROM THIS LAND DISTURBANCE SITE ARE AUTHORIZED BY THE MISSOURI STATE OPERATING PERMIT NUMBER:

_____

IF YOU HAVE QUESTIONS OR CONCERNS ABOUT STORMWATER DISCHARGES FROM THIS SITE, PLEASE CONTACT THE MISSOURI DEPARTMENT OF NATURAL RESOURCES AT

1-800-361-4827

FACT SHEET

MOR100000 LAND DISTURBANCE GENERAL PERMIT
2012 Reissue

The purpose of this fact sheet is for permit clarity. It is not an enforceable part of the permit.
The Federal Water Pollution Control Act ("Clean Water Act" Section 402 Public Law 92-500 as amended) established the National Pollution Discharge Elimination System (NPDES) permit program. This program regulates the discharge of pollutants from point sources into the waters of the United States, and the release of stormwater from certain point sources. All such discharges are unlawful without a permit (Section 301 of the "Clean Water Act"). After a permit is obtained, a discharge not in compliance with all permit terms and conditions is unlawful. Missouri State Operating Permits (MSOPs) are issued by the Director of the Missouri Department of Natural Resources (Department) under an approved program, operating in accordance with federal and state laws (Federal "Clean Water Act" and "Missouri Clean Water Law" Section 644 as amended). MSOPs are issued for a period of five (5) years unless otherwise specified.
As per [40 CFR Part 124.8(a)] and [10 CSR 20-6.020(1)2.] a Fact Sheet shall be prepared to give pertinent information regarding the applicable regulations, rationale for the development of effluent limitations and conditions, and the public participation process for the Missouri State Operating Permit (operating permit) listed below.

PART I. NPDES Stormwater General Permit

The vast majority of discharges associated with construction activity are covered under NPDES general permits. General permits cover a group of similar dischargers under one permit. General permits simplify the process for dischargers to obtain authorization to discharge, provide permit requirements for any discharger that applies for coverage, and reduce the administrative workload for NPDES permitting authorities.

This General Permit is for regulating stormwater discharge at land disturbance construction sites in Missouri. This program requires the owner or operator of a construction site disturbing land of one acre or greater, or less than one acre but part of a larger common plan of development, to obtain this permit prior to conducting any land disturbance activity.

PART II. The Need for Stormwater Regulations at Construction Sites

Stormwater runoff is a major source of urban water pollution endangering humans by polluting the water resources used for drinking, household purposes, recreation and fishing. Stormwater discharges often contain pollutants in amounts that could reduce water quality. The primary pollutants of concern from construction activities are silt and sediment, but other pollutants such as oils and grease, vehicle fluids, and debris are present as well.

Stormwater runoff from construction activities can have a significant impact on water quality. As stormwater flows over a construction site, it can pick up pollutants like sediment, debris, and chemicals and transport these to a nearby storm sewer system or directly to a river, lake, or coastal water. Polluted stormwater runoff can harm or kill fish and other wildlife. Sedimentation can destroy aquatic habitat, and high volumes of runoff can cause stream bank erosion. Debris can clog waterways and potentially reach the ocean where it can kill marine wildlife and impact habitat.
Construction activities increase pollutant loads in runoff. The volume and rate of runoff are typically increased, providing a larger capacity to transport pollutants to rivers and lakes. In addition, the removal of vegetation leaves bare soil which is much more vulnerable to erosion, resulting in sediment moving into receiving waters.

Additional stormwater information and requirements including application for a land disturbance permit can be found at http://dnr.mo.gov/env/wpp/stormwater/sw-land-disturb-permits.htm.

PART III. Key Component and Primary Requirement of this Permit

The key component of this permit are effluent limitations that require the permittee to minimize discharge of pollutants in stormwater by using control measures that reflect best engineering practices base on federal and state government best professional judgment. Dischargers must minimize their discharge of pollutants in stormwater using appropriate erosion and sediment controls and control measures for other pollutants such as litter, construction debris, and construction chemicals that could be exposed to stormwater and other wastewater. The primary requirement of this general permit is the development and implementation of a stormwater pollution prevention plan (SWPPP) to document the steps they will take to comply with the terms, conditions and effluent limitations of the permit. Note that the SWPPP is not an effluent limitation, nor does it include effluent limitations. Information including examples of a SWPPP can be found at the following http://cfpub.epa.gov/npdes/stormwater/swppp.cfm#model. These examples should be used for educational or training purposes only. Construction site SWPPPs must be developed following the requirements of Missouri's land disturbance permit and describe the specific conditions of the site and plans for development.

PART IV. Additional Information for the Purpose of Permit Clarity

Applicability

- **"Industrial stormwater run-off"** are activities that take place at industrial facilities, such as material handling and storage, that are often exposed to the weather. As runoff from rain or snowmelt comes into contact with these activities, it can pick up pollutants and transport them to a nearby storm sewer system or directly to a river, lake, or coastal water. To

  minimize the impact of stormwater discharges from industrial facilities, the NPDES program includes an industrial stormwater permitting component that covers 10 categories of industrial activity that require authorization under an NPDES industrial stormwater permit for stormwater discharges. More information on industrial permit requirements can be found at http://dnr.mo.gov/env/wpp/stormwater/sw-industrial-permits.htm.

- A **"larger common plan of development or sale"** is a contiguous area where multiple separate and distinct construction activities may be taking place at different times on different schedules under one plan. For example, if a developer buys a 20-acre lot and builds roads, installs pipes, and runs electricity with the intention of constructing homes or other structures sometime in the future, this would be considered a larger common plan of development or sale. If the land is parceled off or sold, and construction occurs on plots that are less than one acre by separate, independent builders, this activity still would be subject to stormwater permitting requirements if the smaller plots were included on the original site plan. Other than the less than one acre property sold to the individual for construction of their personal residence, property of any size which is part of a larger common plan of development where the property has been stabilized and the original permit terminated will require application of a new land disturbance permit for any future land disturbance activity. The larger common plan of development or sale also applies to other types of land development such as industrial parks or well fields. A permit is required if one or more acres of land will be disturbed, regardless of the size of any of the individually-owned or developed sites.

- The **SWPPP** required for permit issuance is a general document written in a manner that can be utilized for any project throughout the governmental jurisdiction as each individual project is planned and designed. Individual projects covered under this permit must have a SWPPP developed specific to the project site prior to any remove of any vegetation or site disturbance. Individual projects must be identified in the quarterly report.

- Documentation of Permit Eligibility Related to **Endangered Species:** The SWPPP must include documentation supporting a determination of permit eligibility with regard to Endangered Species.
  For more information please visit the following links:

  For information on understand what critical habitat is, please go to the following link, www.fs.fed.us/r9/wildlife/tes/docs/esa_references/critical_habitat.pdf.

  For information on listed species by State & County, please go to the following link, http://cfpub.epa.gov/npdes/stormwater/esa.cfm.

  The Missouri Department of Conservation's internet site for the Natural Heritage Review may be very helpful and can be found at the following link, http://mdcgis.mdc.mo.gov/heritage/newheritage/heritage.htm. Also helpful are the local offices of the U.S. Fish and Wildlife Service (FWS) and the National Marine Fisheries Service (NMFS), these centers often maintain lists of federally listed endangered or threatened species on their internet sites.

  If there are listed species in the county or township, check to see if critical habitat has been designated and if that area overlaps or is near the project area. Critical habitat designations and associated requirements may also be found at 50 CFR Parts 17 and 226. For additional information, use the mapview tool at http://criticalhabitat.fws.gov/crithab/ to find data specific to your state and county.

- A Clean Water Act **Section 404 Department of the Army Permit** and the Department's Clean Water Act Section 401 Water Quality Certification (certification) are needed when placing material or fill into jurisdictional waters of the United States. Any impacts to jurisdictional streams or wetlands would require an application to be sent to the appropriate US Army Corps of Engineers District Regulatory Branch. A map of the district offices and contact information can be located online at: http://www.dnr.mo.gov/env/wpp/401/corps-map3.gif). Not all land disturbance projects will require a 404 permit; however, if a 404 permit is required, land disturbance activities are not to be conducted in the jurisdictional area of the project until the 404 permit has been obtained. A discussion on the need for a 404/401 permit as a requirement of this permit and is to be included in the SWPPP.

Exemptions from Permit Requirements

- The USEPA defines **linear projects** to include the construction of roads, bridges, conduits, substructures, pipelines, sewer lines, towers, poles, cables, wires, connectors, switching, regulating and transforming equipment and associated ancillary facilities in a long, narrow area. Missouri regulation 10 CSR 20-6.200 (1)(B) 8 exempts linear project construction from stormwater permit regulations which meet one of the following: A. Grading of existing dirt or gravel roads which does not increase the runoff coefficient and the addition of an impermeable surface over an existing dirt or gravel road; B. Cleaning or routine maintenance of roadside ditches, sewers, waterlines, pipelines, utility lines or similar facilities; C. Trenches two (2) feet in width or less; or D. Emergency repair or replacement of existing facilities as long as best management practices are employed during the emergency repair.

Permit Requirements

- The permit requires that the **"sequence and timing"** of activities for disturbing soils at the site be addressed in the SWPPP. For purposes of this requirement and to allow flexibility for contractors, "sequence and timing" can be replaced with "intended start and completion date" of activities.

- The requirement of a **buffer area** applies only to surface water as defined by the Environmental Protection Agency. The Department does not consider stormwater control features (e.g. stormwater conveyance channels, storm drain inlets, sediment basins) to constitute "surface waters" for the purpose of triggering the buffer area requirement. Areas that the permittee does not own or that are otherwise outside operational control may be considered areas of undisturbed natural buffer for purposes of compliance with this requirement.

- Areas that are no longer being disturbed, **stabilization of the area must be initiated immediately**. For purposes of this permit the following types of activities will constitute the initiation of stabilization:
  a) prepping the soil for vegetative or non-vegetative stabilization;
  b) applying mulch or other non-vegetative product to the exposed area;
  c) seeding or planting the exposed area;
  d) starting any of the activities in # 1 – 3 on a portion of the area to be
  e) stabilized, but not on the entire area; and
  f) finalizing arrangements to have stabilization product fully installed in compliance with the applicable deadline for completing stabilization. This list of examples is not exhaustive.

  The term "immediately" is used to define the deadline for initiating stabilization measures. In the context of this requirement, "immediately" means as soon as practicable, but no later than the end of the next work day, following the day when the earth-disturbing activities have temporarily or permanently ceased.

- The permit requires the submittal of a **quarterly report**. The required quarterly report should be sent to the Department by post mail to P.O. Box 176, Jefferson City MO 65102, and/or by email to wpsc401cert@dnr.mo.gov.

- The permittee is required to conduct inspections of the site. The person(s) inspecting the site may be a staff person or a hired third party to conduct such inspections. The permittee is responsible for ensuring that the person who conducts inspections is a "qualified person or personnel." A **"qualified person"** is a person knowledgeable in the principles and practice of erosion and sediment controls and pollution prevention, who possesses the skills to assess conditions at the construction site that could impact stormwater quality, and the skills to assess the effectiveness of any stormwater controls selected to control the quality of stormwater discharges from the construction activity.

- A sample **inspection report** has been developed as a helpful tool to aid in completing site inspections. This sample inspection report was created consistent with USEPA's Developing Your Stormwater Pollution Prevention Plan and can be found at http://www.epa.gov/npdes/pubs/sw_swppp_inspection_form.doc. Both the guide and the sample inspection report (formatted in Microsoft Word) can be found at http://cfpub.epa.gov/npdes/stormwater/swppp.cfm.

- For common drainage locations that serve an area with 10 or more acres disturbed at one time, a temporary (or permanent) **sediment basin** that provides storage for a calculated volume of runoff from the drainage area from a 2-year, 24-hour storm, or equivalent control measures, must be provided where attainable until final stabilization of the site. Where no such calculation has been performed, a temporary (or permanent) sediment basin providing 3,600 cubic feet of storage per acre drained, or equivalent control measures, must be provided where attainable until final stabilization of the site. When computing the number of acres draining into a common location, it is not necessary to include flows from offsite areas and flows from on-site areas that are either undisturbed or have undergone final stabilization where such flows are diverted around both the disturbed area and the sediment basin. In determining whether installing a sediment basin is attainable, the operator may consider factors such as site soils, slope, available area on-site, etc. In any event, the operator must consider public safety, especially as it relates to children, as a design factor for the sediment basin, and alternative sediment controls must be used where site limitations would preclude a safe design.
- Public Notification: A public notification sign has been added to the permit. If a different sign is to be used it should be one of the same size sign and lettering and containing the same information as that of the one supplied with the permit. The required information includes a statement for those with questions or concerns, the permit number and the Department's toll free phone number. The permittee shall post a copy of the public notification sign described by the Department at the main entrance to the site. An alternate location is acceptable provided the public can see it and it is noted in the SWPPP. The public notification sign must remain posted at the site until the permit has been terminated.

Other Discharges

- Machinery should be kept out of the waterway as much as possible. Fuel, oil and other petroleum products, equipment and any solid waste should not be stored below the ordinary high water mark at any time or in the adjacent floodway beyond normal working hours. All precautions are to be taken to avoid the release of wastes or fuel as a result of this operation. Petroleum products spilled should be immediately cleaned up and disposed of properly. Any such **spills of petroleum or other chemicals** are to be reported as soon as possible to the Department's 24-hour Environmental Emergency Response number at (573) 634-2436.

Sampling Requirements and Other Effluent Limitations

- 40 CFR 450.21 Subpart B - Construction and Development (C&D) Effluent Guidelines are **non-numeric effluent limits** and are structured to require construction operators to first prevent the discharge of sediment and other pollutants through the use of effective planning and erosion control measures; and second, to control discharges that do occur through the use of effective sediment control measures. Permittees are also required to implement a range of pollution prevention measures to limit or prevent discharges of pollutants including those from dry weather discharges. The C&D rule's non-numeric effluent limits are available at the following internet site: http://www.gpo.gov/fdsys/pkg/CFR-2010-title40-vol29/xml/CFR-2010-title40-vol29-sec450-21.xml. The associated fact sheet can be found at: http://www.epa.gov/npdespub/pubs/cgp_proposedfs.pdf.

- The USEPA has proposed numeric **effluent limitation guidelines** (ELGs) to control the discharge of pollutants from construction sites of a certain size. The Department may modify this permit upon finalization of the USEPA effluent limitation guidelines. The proposed Effluent limitation guidelines can be view at the following website http://water.epa.gov/scitech/wastetech/guide/construction/.

Land Purchase and Change of Ownership

- A person having **operational control over only a portion of a larger project** (e.g., one of four homebuilders in a subdivision), is responsible for compliance with all applicable effluent limits, terms, and conditions of the permit as it relates to the activities on that portion of the construction site, including protection of endangered species, critical habitat, and historic properties, and implementation of control measures described in the SWPPP. This person must ensure either directly or through coordination with other permittees, that these activities do not render another party's pollutant discharge controls ineffective. This person must either implement their own portion of a common SWPPP or develop and implement their own SWPPP. For more effective coordination of BMPs and opportunities for cost sharing, a cooperative effort by the different operators at a site to prepare and participate in a comprehensive SWPPP is encouraged. Individual operators at a site may, but are not required to, develop separate SWPPPs that cover only their portion of the project provided referenced is made to other operators at the site. In instances where there is more than one SWPPP for a site, cooperation between the permittees is encouraged to ensure stormwater discharge control measures are consistent with one another (e.g., provisions to protect listed species and critical habitat).

- The Department does not allow the transfer of a land disturbance permit from one owner to another; however, to facilitate the change in the ownership status of a property the Department developed the "Application for Change of Ownership" form. This form will allow the new owner to receive a new permit and number. The form may also be used to terminate the original permit if all the property included in the original permit is no longer the responsibility of the original owner. The "Application for Change of Ownership" (form MO780-2051) can be found online at http://www.dnr.mo.gov/forms/#StormWater.

Termination

- To begin the process of terminating this permit, the permittee should submit Form H – "Request for Termination" (MO780-1409) to the Department. The form can be found at the following web location: http://www.dnr.mo.gov/forms/#StormWater.

PART V. Addendums to Fact Sheet

Addendum #1

Individual Lot Certification

This form is not a requirement of the permit, but may be used by the permittee when selling individual lots that are part of the property that has been authorized by a Missouri Water Pollution Control General Permit under the NPDES for stormwater discharged associated with construction activity. This is a certification between the purchaser and the seller to cooperatively implement the SWPPP and the conditions of the NPDES permit and does not constitute a transfer of the permit. The permittee shall maintain this form on-site, or in a readily available location. The permittee shall provide individual lot certification forms or a copy of the contract for land sale having the equivalent wording to the Missouri Department of Natural Resources.

Addendum #2

Response to Comments

The 30-day public notice period for this permit expired on May 30, 2012. These are the responses to comments received through the public notice comment process.

ADDENDUM #1
INDIVIDUAL LOT CERTIFICATION

For Storm Water Discharges Associated with Construction Activity Authorized by a Missouri Water Pollution Control General Permit under the National Pollutant Discharge Elimination System

TO BE COMPLETED BY THE NEW LOT OWNER

I certify, under penalty of law, that I have received a copy of the general NPDES permit referenced below, which authorized the original lot owner or developer to discharge storm water runoff from construction activities, and the Storm Water Pollution Prevention Plan (SWPPP) prepared by the original lot owner or developer. I have reviewed the terms and conditions of the general permit and the SWPPP. I accept responsibility for erosion and sediment control during construction of the home or building for each of the lot(s) listed below. In the event the Missouri Department of Natural Resources notifies the undersigned of water quality violations due to conditions at any lot listed below and I am unable or unwilling to take action within 30 days to further reduce erosion or control sediment, then I agree to allow the original lot owner or developer to have reasonable access to the site to implement erosion and sediment control measures. I understand this certification is an agreement between the purchaser and seller to cooperatively implement the SWPPP and the conditions of the general NPDES permit.

Facility Name:
(as listed on permit) _____

Permit Number: MOR _____

Lot Number(s): _____

New Owner's Signature: _____

Name (typed or printed): _____

Phone Number: _____

Complete Only if New Owner is a Corporation and not an Individual:

Company Name: _____

Company Address: _____

Company Phone #: _____

TO BE COMPLETED BY THE PERMIT HOLDER

As permittee for the overall tract wherein the above listed lot(s) are located, I certify that I have provided the above named lot purchaser with a copy of the general NPDES permit and the Storm Water Pollution Prevention Plan (SWPPP) for the project, and I have informed the lot purchaser of their responsibility to minimize erosion and control sedimentation. I understand this certification does not constitute a transfer of the permit and understand this certification is an agreement between the purchaser and seller to cooperatively implement the SWPPP and the conditions of the general NPDES permit.

Signature: _____

Name (typed or printed): _____

Phone Number: _____

The permittee shall maintain this form on-site, or in a readily available location. The permittee shall provide individual lot certifications forms or a copy of the contract for land sale having the equivalent wording to the Missouri Department of Natural Resources upon request.

Addendum #2

MOR100 Land Disturbance Permit
Response to Public Notice Comments

(The Missouri Department of Natural Resources' public notice comment period for this permit expired on May, 30, 2012.)

GENERAL COMMENT RESPONSES

STANDARD LAND DISTURBANCE PERMIT - MORA

The Department received comments related to earlier drafts of the Standard Land Disturbance Permit (MORA) and/or comparisons between the MORA and the current draft MOR100 permit. Until there is one land disturbance permit, the two permits will have differences. The Department will as much as possible keep the number of differences at a minimum. There has been no change to the permit as a result of these comments.

FEDERAL REGULATION 40 CFR 450.21

As the NPDES authorized permitting authority, the Department is required to incorporate into the permit the federal regulation 40 CRF 450.21. These are non-numeric effluent limitations reflecting the best practicable technology currently available (BPT). The Department received a few comments regarding these requirements. These requirements will remain stated in the permit as required by the Environmental Protection Agency (EPA). An additional comment was to replace the word "prevent" located throughout the permit with the word "minimize" in order to be consistent with federal regulation. The draft permit's use of the word "minimize" is consistent with the federal regulation. There has been no change to the permit as a result of these comments.

TYPOS/DEFINITIONS/REFERENCES

The Department received comments regarding typos and similar items in the proposed permit. These entries have been corrected in the final permit. The Department received comments suggesting definition and clarification to several areas of the proposed permit. All suggestions were considered and many have been added to the permit Fact Sheet.

SPECIFIC COMMENT RESPONSES

SECTION A. APPLICABILITY

PERMIT ISSUANCE REQUIRMENT - DEVELOPMENT OF SWPPP

Section A.1. - The Department received a comment on the development of a Stormwater Pollution Prevention Plan (SWPPP) prior to the issuance of the permit. The SWPPP required for permit issuance is a general document written in a manner that can be utilized for any project throughout the governmental jurisdiction as each individual project is planned and designed. Project specific plans, maps, etc. as part of the SWPPP must be developed prior to any land disturbance conducted at the site. The Permit Fact Sheet will include more clarity on this section of the permit. Language has been changed to clarify the requirements.

PERMIT LANGUAGE & STORMWATER REGULATION

Section A.1. - The Department received a few comments regarding the applicability of permit coverage when compared to state stormwater regulations. The Department understands the issue of varying language between the draft permit and the state stormwater regulations. The Department is currently reviewing the stormwater regulations for revision. There has been no change to the draft permit as a result of this comment.

PROJECTS COVERED UNDER THIS PERMIT

Section A.1. - The Department received comments that suggested revisions to paragraph five of this section of the draft permit. The Department has revised the draft permit as suggested in order to better clarify this requirement.

OWNER/OPERATOR

Section A.1. - The Department received comments regarding the owner/operator statement and asked for clarification of primary responsibility for compliance with the permit. All parties are responsible. If there are enforcement actions the Department has the authority to involve all parties as necessary and to the extent possible. There has been no change to the permit as a result of this comment.

SECTION C. REQUIREMENTS

STORMWATER VOLUME

Section C.1. - The Department received a comment regarding this section of the draft permit which requires the permittee to minimize soil erosion through control of stormwater volume. As the NPDES authorized permitting authority, the Department is required to incorporate into the permit the federal regulation 40 CFR 450.21. For additional related discussion please refer to the earlier section of this document titled "General Comment Responses". The commenter questions the maximizing of infiltration in order to control stormwater volume at a land disturbance site. There are ways to reduce volume other than infiltration. The regulation and the permit do not prescribe one BPT over another. The language and goal of these provisions are to reduce

erosion. For example, one way to minimize the stormwater volume at a site is to reduce or eliminate run on to the site from up-hill off-site sources. This effectively reduces the volume of stormwater to be managed on-site. Another example is to reduce volume at individual outlet structures by having multiple outlet structures. This effectively reduces the volume at each individual outlet structure. By managing/directing the flow of runoff at the site you can also reduce the volume of water at individual outlet points. There has been no change to the draft permit as a result of this comment.

QUARTERLY REPORT

Section C.4., - The Department received comments regarding the quarterly report. To accommodate the complexity and number of outfalls associated with transportation projects language was changed to simplify reporting requirements. Instead of identifying each individual outfall, reports can simply refer to the receiving water.

ACCESSIBILITY OF THE SWPPP

Section C.5. The Department received a comment regarding onsite accessibility of the SWPPP. The permit will be revised to include additional wording regarding the SWPPP availability for inspections.

RECEIVING STREAMS & OUTFALL INFORMATION

Section C.5.a., and C.6.c. – The Department received comments concerning the use of outfall as the primary reference point. Often projects have a multitude of outfalls, particularly projects related to road construction. In these cases most outfalls have very similar BMPs, so listing individual outfalls is often not necessary. It was suggested that the Department add the word "primary" when naming the receiving streams in the SWPPP and remove the outfall information from the SWPPP requirement. Language in the permit was changed to simplify the requirements.

SEQUENCING & TIMING

Section C.6.a.2. - The Department received a couple of comments regarding the requirement found in this section of the draft permit. There has been no change as a result of this comment; however the Department will add clarification in the Permit Fact Sheet that "sequencing and timing" can also mean start and completion dates of intended activities.

BUFFER AREA

Section C.6.e. – The Department received a request to define "infeasible" when requiring the construction of a buffer area. The commenter referred to EPA's Construct General Permit (CGP) as guidance. EPA's permit defines what is not considered "surface water" and therefore would not require a buffer area. If a buffer area is infeasible, EPA's permit requires the implementation of other sediment controls which must achieved the same sediment load reduction as a buffer area would have. The Department will add a similar note to the Permit Fact Sheet regarding what is not "surface water". There has been no change to the permit as a result of these comments.

DISTURBED AREAS

Section C.6.h. – The Department received a comment to remove the word "immediately" from the requirement to initiate temporary and final stabilization of disturbed areas. This requirement is part the federal regulation which are non-numeric effluent limitations reflecting the best practicable technology currently available (BPT). As the NPDES authorized permitting authority, the Department is required to incorporate into the permit the federal regulation 40 CFR 450.21. For additional related discussion please refer to the earlier section of this document titled "General Comment Responses". The Department also received a suggestion to include guidance as to what constitutes "initiation" of stabilization. The Department will include in the Permit Fact Sheet information similar to EPA's regarding the context of this provision. There has been no change to the draft permit as a result of this comment.

GOOD ENGINEERING PRACTICES

Section C.6.j. – The Department received a comment to reword this section of the draft permit to include "… similar effective BMPs shall be based on good engineering practices." The Department will revise the permit accordingly.

ROADWAYS & CURB INLETS

Section C.6.m. - The Department received a couple of comments regarding this section and has made a revision to the draft permit but did not include the additional language regarding the cleaning of inlet protection devices.

RESPONSBLE PERSON

Section C.12. – The department received a comment noting an incorrect reference, and the language was changed to point correctly to the requirements of paragraph 13.

SITE INSPECTION REPORTS

Section C.13. - It was suggested that the Department consider revising this section of the draft permit to include an inspection requirement following a rainfall event of 0.25 inches or greater. The Department currently requires an inspection of BMPs anytime rainfall causes stormwater runoff to occur onsite. Further discussion and review of any proposal to change this requirement will be needed before considering a change to permit. There has been no change to the permit as a result of this comment.

Section C.13. - The Department received a couple of comments regarding site inspection reports kept on site. The Department will include a similar option in the permit, just as EPA has with the GCP that all site inspection reports can be kept at the site or at an easily accessible location so that it can be made available at the time of an onsite inspection or upon request by the Department.

Section C.13. – The Department received a comment suggesting that language be changed so that inspections are only required to occur during a project's normal hours, so that inspections can occur on the next business day following a long holiday weekend. The language was changed to reflect this suggestion.

SECTION E. SAMPLING REQUIREMENTS AND EFFLUENT LIMITATIONS

Section E. - The Department received a couple of comments suggesting language to better clarify wording in Section E., 1 of the draft permit. The Department has revised the draft permit for better clarity. `

SECTION F. RECORDS

Section F.3. – The Department received a comment requesting that the word "provide" be replaced with the word "ensure" in this section of the permit. The Department has made this change to the permit.

APPENDIX M

DRAWING

APPENDIX C:

GEOTECHNICAL REPORT

GEOTECHNICAL ENGINEERING REPORT

32ND STREET WIDENING
CENTRAL CITY ROAD TO SCHIFFERDECKER AVENUE
JOPLIN, MISSOURI

PREPARED FOR:
CITY OF JOPLIN, MISSOURI

PREPARED BY:
OLSSON, INC.

April 20, 2020
OLSSON PROJECT NO: 015-2768

302 East Millsap Road · Fayetteville, AR 72703 · (479) 443-3404 · FAX (479) 443-4340

olsson

olsson

April 20, 2020

City of Joplin, Missouri
Attn: David Hertzberg
602 South Main Street
Joplin, Missouri 64801

Re: Geotechnical Engineering Report
32nd Street Widening
Central City Road to Schifferdecker Avenue
Joplin, Missouri
Olsson Project No. 015-2768

Dear Mr. Hertzberg:

Olsson, Inc. has completed the Geotechnical Engineering Report for the 32nd Street Widening between Central City Road and Schifferdecker Avenue. The enclosed report summarizes our understanding of the project, presents the findings of the borings and laboratory tests, and discusses the observed subsurface conditions. Based on this information, this report provides geotechnical engineering recommendations for the new pavements and associated improvements.

We appreciate the opportunity to provide our geotechnical engineering services for this project. If you have any questions or need further assistance, please contact us at your convenience.

Respectfully submitted,
Olsson, Inc.

STATE OF MISSOURI
CHRISTY LYNN WILSON
NUMBER PE-2018000298
PROFESSIONAL ENGINEER

4/20/20

Christy Wilson, PE

James Landrum, PE

302 East Millsap Road / Fayetteville, AR 72703
O 479.443.3404 / olsson.com

TABLE OF CONTENTS

PAGE

A. PROJECT UNDERSTANDING
A.1. Geotechnical Scope 1
A.2. Site Description & Project Information 1

B. EXPLORATORY AND TEST PROCEDURES 2

C. SUBSURFACE CONDITIONS
C.1. Soil Stratigraphy 3
C.2. Groundwater Observation 3

D. GEOTECHNICAL CONSIDERATIONS 4

E. SITE PREPARATION
E.1. General Roadway Preparation 6
E.2. Excavations 7
E.3. Structural Fill 7
E.4. Drainage Considerations 8
E.5. Pavement Subgrade Preparation 9

F. CONCLUSIONS AND LIMITATIONS
F.1. Construction Observation and Testing 10
F.2. Limitations 10

APPENDICES
Appendix A: Boring Location Plan
Appendix B: Symbols and Nomenclature, Boring Logs
Appendix C: Laboratory Test Results

A. PROJECT UNDERSTANDING

A.1. GEOTECHNICAL SCOPE

This Geotechnical Engineering Report presents the results of the subsurface exploration completed for the planned widening of 32nd Street in Joplin, Missouri. We drilled 29 borings along the alignment at the locations shown on the Boring Location Plans in Appendix A. Boring logs are provided in Appendix B. The purpose of this exploration was to evaluate the existing subsurface conditions encountered at the borings and, based on these conditions, provide geotechnical design recommendations for the new pavements and associated improvements.

A.2. SITE DESCRIPTION & PROJECT INFORMATION

The project limits extend along 32nd Street from Central City Road to Schifferdecker Avenue in Joplin, Missouri (Figure 1).

Figure 1: Site Location



32nd Street will be widened from the existing two-lane roadway to a three-lane roadway with a center turn lane. Based on the cross sections developed by ***Olsson***, up to about 15 feet of cut and 20 feet of fill will be required to achieve the designed grades along the roadway alignment. Greater amounts of cut and fill will be required outside of the pavement limits.

B. EXPLORATORY AND TEST PROCEDURES

As part of this exploration, we drilled 29 borings along the alignment using a truck-mounted drill rig. The approximate locations of the borings are shown on the Boring Location Plans in Appendix A. Boring Logs are provided in Appendix B.

The borings extended to depths ranging from 5 feet to 30 feet. Samples were obtained using thin walled tubes and split barrel samplers during performance of the Standard Penetration Test (SPT) at the depths shown on the boring logs. The samples were sealed and returned to the laboratory for testing and classification.

The drill crew prepared a field log of the material encountered at each boring. The field logs included visual classifications of the materials encountered during drilling as well as the driller's interpretation of the conditions between samples. Water level observations were made in the borings at the times and under the conditions noted on the boring logs. The boring logs in Appendix B represent the engineer's interpretation of the field logs and include modifications based on observation and laboratory tests of the samples. Elevations shown on the boring logs were provided by an ***Olsson*** survey crew and are rounded to the nearest tenth of an inch.

At our laboratory, we visually classified the soil samples in accordance with the Unified Soil Classification System (USCS). We measured the moisture content of the samples. In addition, dry density tests were performed on selected tube samples. A calibrated hand penetrometer was used to estimate the soil consistency on the remaining tube samples. Atterberg limits tests were also performed on select samples to aid in the classification of the soils. We performed Standard Proctor and California Bearing Ratio (CBR) tests on the bulk samples from borings B-7 and B-11. The CBR tests were performed on remolded samples compacted to at least 95% of the standard proctor maximum dry density. Results of the laboratory tests are provided on the respective boring logs. Results of the CBR tests are provided in Appendix C.

C. SUBSURFACE CONDITIONS

C.1. SOIL STRATIGRAPHY

The boring logs show the soil and bedrock conditions encountered at the indicated boring locations. Variations in materials may occur between the borings and between samples within the borings. The stratification lines shown on the boring logs represent the approximate boundary between soil types. The actual transition may be gradual.

The asphaltic concrete pavement along 32nd Street varied in thickness from about 2 inches to 11.5 inches. Variations in the thickness of pavements throughout the alignment should be anticipated.

Beneath the pavement, we generally encountered lean to fat clay soils with varying amounts of sand and chert gravel. Some of the clay soils became shaley at greater depths. The clay soils were generally dry to moist and ranged from firm to hard in consistency. Some soils were dry and may require moisture conditioning. The clay soils at borings B-105, B-112 and B-113 contained chert seams. Borings B-1 through B-9, B-11 through B-15, B-101 through B-106 and B-108 through B-113 terminated in the clay soils at depths ranging from 5 feet to 30 feet.

The clay soils at boring B-107 transitioned to chert gravel at a depth of about 23 feet. It is possible this chert gravel zone may be a weathered limestone layer. The boring terminated in the chert gravel at a depth of about 29 feet. The clay soils at boring B-10 transitioned to weathered shale at a depth of about 8.5 feet. Boring B-10 terminated in the weathered shale at a depth of about 9 feet.

C.2. GROUNDWATER OBSERVATION

Water level observations were made at the boring locations during drilling and immediately upon completion of the borings. Water was observed at boring B-108 while drilling at a depth of about 23.5 feet. Water was not observed immediately after drilling at boring B-108 or at the remaining borings at either of these times. The presence or lack of groundwater in the borings should not be construed to represent an absolute or permanent condition. Variations and uncertainties exist with relatively short-term water level observations in boreholes. Water levels can and should be anticipated to vary between boring locations, as well as with time within specific borings. Groundwater can collect near the soil/bedrock interface, and soft, wet soils should be expected near this transition. Groundwater levels may be expected to fluctuate with variations in precipitation, site grading, drainage and adjacent land use. Long term monitoring with piezometers generally provides a more representative indication of the potential range of groundwater conditions.

D. GEOTECHNICAL CONSIDERATIONS

Based on the cross sections developed by ***Olsson***, up to about 15 feet of cut and 20 feet of fill will be required to achieve the designed grades along the roadway alignment. Greater amounts of cut and fill will be required outside of the pavement limits.

New structural fills should be constructed well in advance of pavements. Where fill depths are greater than 10 feet beneath planned pavements, we estimate pavement construction should be delayed at least 30 days following fill placement. Longer delays may be required where fill depths exceed 15 feet. To monitor the amount of consolidation that occurs, settlement plates should be installed prior to fill construction with elevations measured on a regular basis by the project surveyor during and following fill construction. We recommend at least 3 settlement plates be installed in each of the deeper fill areas. In larger fill areas along the alignment, additional settlement plates may be needed. Once the data indicate consolidation is substantially complete, pavement could begin being placed.

Existing drainage ditches were located along portions of the alignment. Although not indicated by the boring logs, lower consistency and/or organic soils should be anticipated within these areas. Undercutting the existing softer soils within the drainage areas prior to placement of new structural fill should be anticipated. The base of the undercut should be observed by ***Olsson*** to determine if all the unsuitable material has been removed. Structural fill should then be placed in accordance with the recommendations provided in the *Structural Fill* section of this report.

Many of the soil samples were relatively dry. These lower moisture contents indicate the soils may require significant moisture conditioning prior to recompaction. These soils should be scarified, moisture conditioned and recompacted in accordance with the recommendations presented in the *Structural Fill* section of this report.

<u>Karst/Mining Considerations</u>

The Joplin area was mined in the past and is also situated in a karst region. Although not observed during our exploration, it is possible former prospect holes and mine shafts may be encountered during construction. Unidentified or undiscovered prospect holes and mine shafts could result in sink holes that develop in the future resulting in excessive settlement of the roadway. While these risks cannot be fully eliminated, they can be reduced with careful observation during construction.

We reviewed the Missouri Geological Survey website regarding information related to karstic features, sinkholes and past mining activities in this region. Based on our review, there are no documented karstic features or sinkholes along the planned alignment. However, documented past producing mines are present nearby as shown in Figure 2.

Figure 2: Past Producing Mines

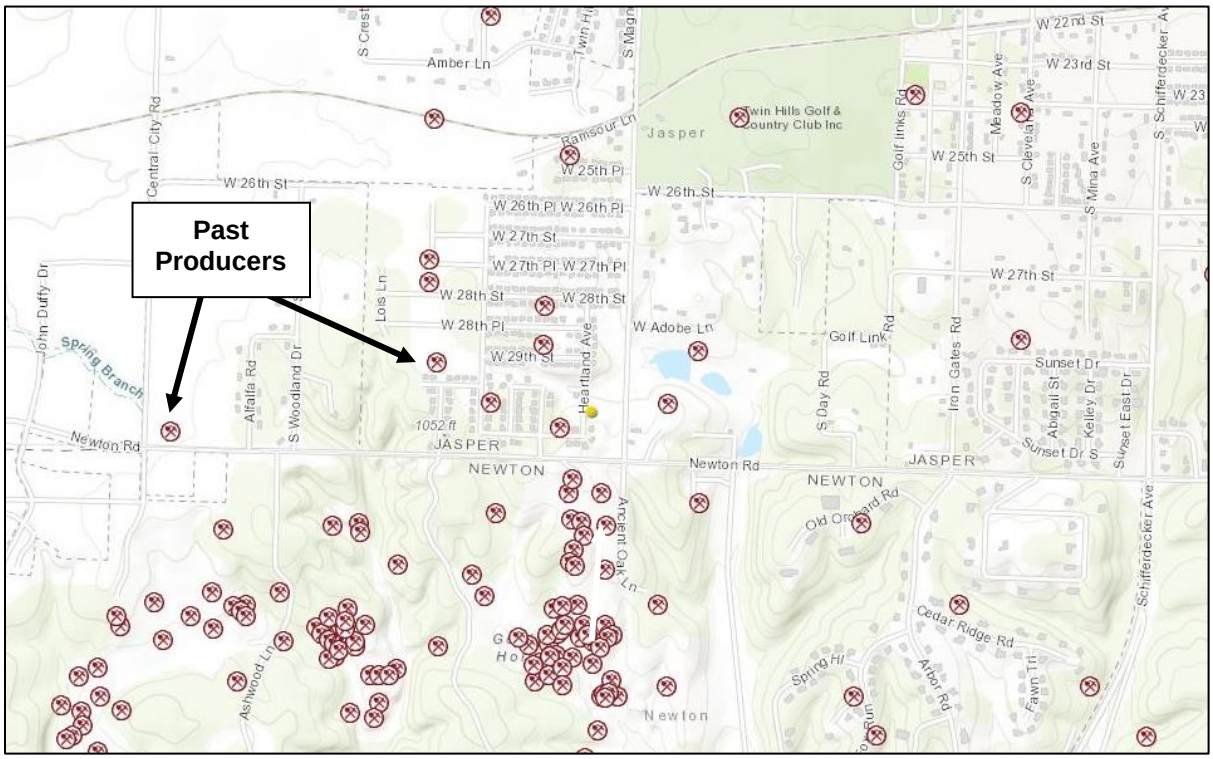

Our exploration was performed to sample and characterize the near surface soil conditions that would be affected by the project. This exploration was not scoped to explore for the presence of underground caves, solution cavities or holes associated with past mining activities (air shafts, prospect holes, etc.). To determine the likelihood of karst or mining activity at the site, additional studies should be undertaken.

E. EARTHWORK

E.1. GENERAL ROADWAY PREPARATION

In addition to the removal of the existing pavements, any existing organic topsoil, vegetation and related root systems, frozen soil, and/or any deleterious or unsuitable materials should be stripped from the construction area. Stripping depths will likely vary and should be adjusted as necessary.

Any required tree removal should also be accomplished during the site stripping operations. Care should be taken to thoroughly remove all root systems. Materials disturbed during removal of stumps should be undercut and replaced with structural fill. The clay soils encountered at many of the borings were relatively dry. In addition, desiccated soils may exist in the vicinity of the trees. The dry or desiccated soils should be moisture conditioned and/or undercut and replaced with structural fill prior to placement of new fill. Grubbing and stripping should be performed during dry weather conditions. Operation of heavy equipment on the site during wet conditions could result in excessive rutting and mixing of organic debris with the underlying soils.

Lower consistency and/or organic soils may be encountered in former drainage areas. Where soft or wet soils are encountered, the exposed subgrade should be thoroughly evaluated by a representative of ***Olsson***. Where the subgrade soils cannot be densified in place, undercutting of the existing softer soils and/or stabilization may be required within these areas prior to placement of new structural fill. The base of the undercut should be observed by ***Olsson*** to determine if all the unsuitable material has been removed.

Following site stripping and removal of pavements and any soft soils, but prior to the placement of new fill, the exposed ground surface should be proofrolled with a loaded tandem-axle dump truck with a minimum gross weight of 20 tons or similar equipment. Proofrolling operations should be observed by a representative of ***Olsson***. Unstable and unsuitable soils revealed by proofrolling cannot always be adequately densified in place. These soils should be removed and replaced or stabilized under the direction of ***Olsson***.

Once proofrolling is complete, the upper 9 inches of exposed soil subgrade should be scarified, moisture conditioned and compacted to a minimum of 95 percent of the materials standard Proctor maximum dry density (ASTM Specification D-698) at a moisture content between 2 percent below optimum and 2 percent above optimum.

All slopes steeper than 5(H):1(V) should be benched prior to the placement of fill. Benching of the slope provides interlocking between the fill and natural soils and facilitates compaction of the fill. Benches should be cut as the fill progresses and should have a maximum bench height of 3 feet. Final slopes should be no steeper than 3(H):1(V) to maintain long-term stability, reduce erosion and to provide ease of maintenance. We recommend that permanent slopes be vegetated as soon as practical to minimize the potential for erosion.

E.2. EXCAVATIONS

Varying amounts of chert gravel were encountered at our borings and chert seams could be difficult to excavate. Excavations for deeper utilities may also encounter variably weathered shale or limestone bedrock. Rippability of the bedrock will vary, and the use of jackhammers and other rock excavation equipment and/or methods may be required to reach the anticipated excavation depths.

Experience has indicated that conventional heavy-duty excavation equipment such as backhoes equipped with rock teeth or bulldozers equipped with ripping attachments can sometimes excavate bedrock materials which were penetrated with flight augers in the exploratory borings. However, in less weathered portions of the bedrock, excavations often become much more difficult and could require the use of jackhammers, rock splitters or pneumatic breakers.

E.3. STRUCTURAL FILL

Structural fill soils should be relatively free of organic materials (less than about 5 percent by weight) or other unsuitable materials and should not contain particle sizes larger than 3 inches. Imported fill material, if required, should consist of clay soils exhibiting a liquid limit less than 60 and a plasticity index less than 30 or a well graded granular material such as MoDOT Type 5 baserock or equivalent. Imported fill material that exhibits a liquid limit greater than 60 can be used as structural fill provided it contains a chert content of at least 35 percent retained on the number 4 sieve. Samples of all proposed fill materials should be submitted to ***Olsson*** for testing and approval prior to use. Samples of all potential fill materials should be submitted to ***Olsson*** for review prior to use on the site. In our opinion, the onsite soils are suitable for reuse as structural fill.

Suitable structural fill materials should be placed in loose lifts of 9 inches or less. The soil should be compacted using equipment that is the appropriate type and properly sized for the job. Within small excavations, such as in utility trenches, or around manholes, vibrating plate compactors, walk behind rollers or jumping jacks can be used to achieve the specified compaction. Lift

thicknesses should be reduced to 4 inches in small fill areas requiring small compaction equipment.

In general, structural fill should be compacted to a minimum of 95% of the standard Proctor's maximum dry density. Soils that exhibit a liquid limit greater than 60 and contain a chert content less than 35 percent retained on the number 4 sieve should be placed at least 4 feet below finish grade in pavement areas. Adjustment of moisture content may be necessary to allow compaction in accordance with project specifications. Additional fill placement guidelines are provided in Table 1.

An ***Olsson*** field representative should regularly observe and monitor the excavation and grading operations and perform field density tests to document that moisture and compaction requirements are being achieved.

Table 1: Fill Placement Guidelines

Areas of Fill Placement	Material	Compaction Recommendation (ASTM D698)	Moisture Content (% of Optimum)
Structural Fill – placed less than 10 feet below final grade	On-Site Soils or Imported Clay Soils with LL < 60 and PI < 30 or LL > 60, with Min 35% Chert Retained on #4	95%	0 to +4 percent
Structural Fill – placed more than 10 feet below final grade	On-Site Soils	98%	0 to +4 percent
Granular Material – placed as structural fill	MoDOT Type 5 (or equivalent)	95%	Workable Moisture
Pavement Subgrade – 9 inches compacted subgrade	On-Site Soils	95%	0 to +4 percent

The moisture content for structural fill soils at the time of compaction should be maintained between the ranges specified above. More stringent moisture limits may be necessary with certain soils and some adjustments to moisture contents may be necessary to achieve the specified compaction.

E.4. DRAINAGE CONSIDERATIONS

Water should not be allowed to collect at the ground surfaces near areas of new pavement, either during or after construction. Provisions should be made to quickly remove accumulating seepage

water or storm water runoff from excavations. Undercut or excavated areas should be sloped toward one corner to allow rainwater or surface runoff to be quickly collected and gravity drained or pumped from construction areas. Subgrade soils that are exposed to precipitation or runoff should be evaluated by ***Olsson*** prior to the placement of new fill or pavements to determine if corrective action is required.

E.5. PAVEMENTS SUBGRADE PREPARATION

We understand the pavement section for 32nd Street will consist of 10 inches of asphaltic concrete underlain by 8 inches of MoDOT Type 5 aggregate base. The pavement section should be supported on a minimum of 9 inches of subgrade prepared in accordance with the recommendations presented in this report. Construction scheduling often involves grading and paving by separate contractors and can involve a time lapse between the end of grading operations and the commencement of paving. Disturbance, desiccation or wetting of the subgrade soils between grading and paving can result in deterioration of the previously completed subgrade. If soft areas are identified during the subgrade preparation or if the subgrade soils have been exposed to adverse weather conditions, frost, excessive construction traffic, standing water, or similar conditions, ***Olsson*** should be consulted to determine if corrective action is necessary.

It is important that the pavement subgrade support be relatively uniform, with no abrupt changes in the degree of support. Non-uniform pavement support can occur as a result of varying soil moisture contents or soil types, or where improperly placed utility backfill has been placed across or through areas to be paved. Improper subgrade preparation such as inadequate vegetation removal, failure to identify soft or unstable areas, and inadequate or improper compaction can also produce non-uniform subgrade support.

We recommend that the prepared subgrade extend a minimum of 2-feet outside the pavements, where feasible. ***Olsson*** should be present during subgrade preparation to observe, document, and test compaction of the materials at the time of placement. As recommended for all prepared soil subgrades, heavy, repetitive construction traffic should be controlled, especially during periods of wet weather, to minimize disturbance. The final prepared subgrade should be proofrolled with a loaded dump truck or similar rubber-tired equipment with a total weight of at least 20-tons, immediately prior to placement of new pavements. Proofrolling operations should be observed and documented by ***Olsson.*** Unstable or unsuitable soils revealed by proofrolling should be reworked to provide a stable subgrade or removed and replaced with structural fill.

F. CONCLUSIONS AND LIMITATIONS

F.1. CONSTRUCTION OBSERVATION AND TESTING

We recommend that all earthwork during construction be monitored by a representative of ***Olsson***, including site preparation, placement of all structural fill and trench backfill, and pavement subgrades. The purpose of these services would be to provide ***Olsson*** the opportunity to observe the soil conditions encountered during construction, evaluate the applicability of the recommendations presented in this report to the soil conditions encountered, and recommend appropriate changes in design or construction procedures if conditions differ from those described herein.

F.2. LIMITATIONS

The conclusions and recommendations presented in this report are based on the information available regarding the proposed construction, the results obtained from our borings and sampling procedures, the results of the laboratory testing program, and our experience with similar projects. The borings represent a very small statistical sampling of subsurface soils and it is possible that conditions may be encountered during construction that are substantially different from those indicated by the borings. In these instances, adjustments to design and construction may be necessary. This geotechnical report is based on the information provided to ***Olsson*** and our understanding of the project as noted in this report.

This report was prepared under the direction and supervision of a Professional Engineer registered in the State of Missouri with the firm of **Olsson, Inc**. The conclusions and recommendations contained herein are based on generally accepted, professional geotechnical engineering practices at the time of this report, within this geographic area. No warranty, express or implied, is intended or made. This report has been prepared for the exclusive use of **The City of Joplin, Missouri,** and their authorized representatives for specific application to the proposed project.

APPENDIX A
Boring Location Plan

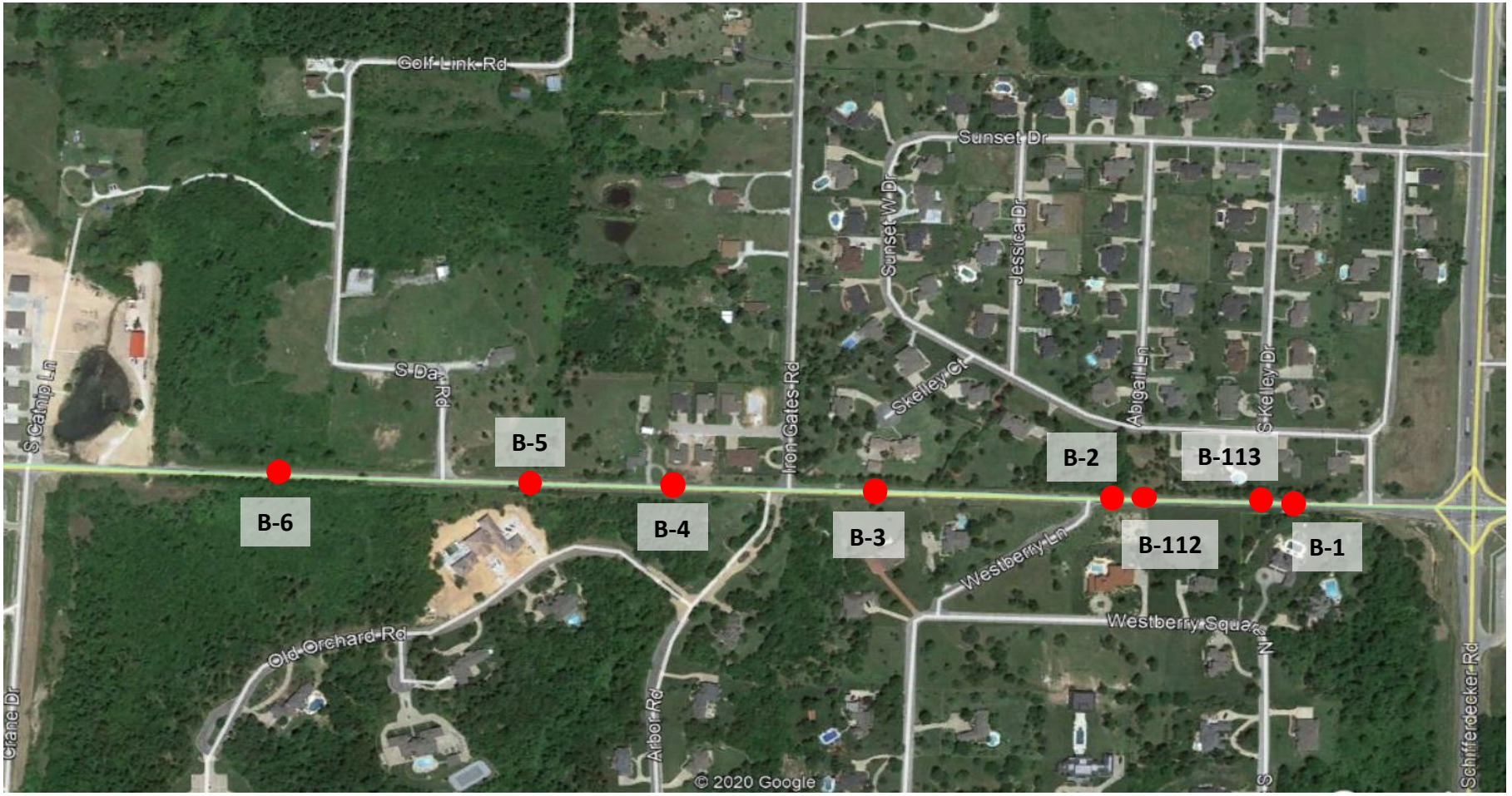

olsson

	Boring Location Plan
Scale: n.t.s. Project No. 015-2768 Approved by: CLW Date: 4/14/20	**32nd Street Widening** **Joplin, Missouri**

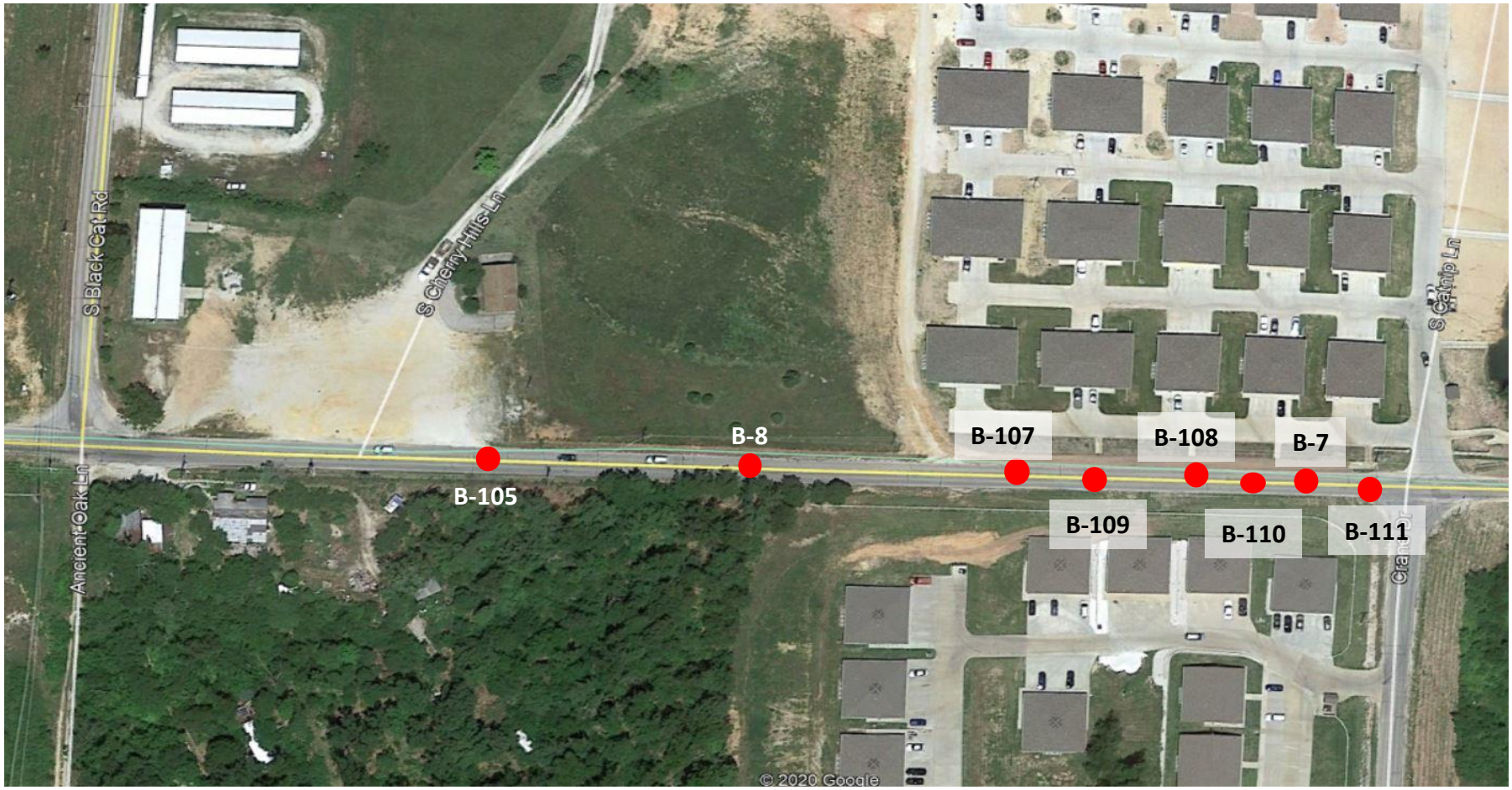

olsson

Scale: n.t.s.	**Boring Location Plan**
Project No. 015-2768	**32nd Street Widening**
Approved by: CLW	**Joplin, Missouri**
Date: 4/14/20	



olsson

	Boring Location Plan
Scale: n.t.s. Project No. 015-2768 Approved by: CLW Date: 4/14/20	**32nd Street Widening** **Joplin, Missouri**

APPENDIX B
Symbols and Nomenclature
Boring Logs

SYMBOLS AND NOMENCLATURE

DRILLING NOTES

DRILLING AND SAMPLING SYMBOLS

SS:	Split-Spoon Sample (1.375" ID, 2.0" OD)	HSA:	Hollow Stem Auger	NE:	Not Encountered
U:	Thin-Walled Tube Sample (3.0" OD)	CFA:	Continuous Flight Auger	NP:	Not Performed
CS:	Continuous Sample	HA:	Hand Auger	NA:	Not Applicable
BS:	Bulk Sample	CPT:	Cone Penetration Test	% Rec:	Percent of Recovery
MC:	Modified California Sampler	WB:	Wash Bore	WD:	While Drilling
GB:	Grab Sample	FT:	Fish Tail Bit	IAD:	Immediately After Drilling
SPT:	Standard Penetration Test Blows per 6.0"	RB:	Rock Bit	AD:	After Drilling
				CI:	Cave-In

DRILLING PROCEDURES

Soil samples designated as "U" samples on the boring logs were obtained in using Thin-Walled Tube Sampling techniques. Soil samples designated as "SS" samples were obtained during Penetration Test using a Split-Spoon Barrel sampler. The standard penetration resistance 'N' value is the number of blows of a 140 pound hammer falling 30 inches to drive the Split-Spoon sampler one foot. Soil samples designated as "MC" were obtained in using Thick-Walled, Ring-Lined, Split-Barrel Drive sampling techniques. Recovered samples were sealed in containers, labeled, and protected for transportation to the laboratory for testing.

WATER LEVEL MEASUREMENTS

Water levels indicated on the boring logs are levels measured in the borings at the times indicated. In relatively high permeable materials, the indicated levels may reflect the location of groundwater. In low permeability soils, the accurate determination of groundwater levels is not possible with only short-term observations.

SOIL PROPERTIES & DESCRIPTIONS

Descriptions of the soils encountered in the soil test borings were prepared using Visual-Manual Procedures for Descriptions and Identification of Soils.

PARTICLE SIZE

Boulders	12 in. +	Coarse Sand	4.75mm-2.0mm	Silt	0.075mm-0.005mm
Cobbles	12 in.-3 in.	Medium Sand	2.0mm-0.425mm	Clay	<0.005mm
Gravel	3 in.-4.75mm	Fine Sand	0.425mm-0.075mm		

COHESIVE SOILS

Consistency	Unconfined Compressive Strength (Qu) (tsf)
Very Soft	<0.25
Soft	0.25 – 0.5
Firm	0.5 – 1.0
Stiff	1.0 – 2.0
Very Stiff	2.0 – 4.0
Hard	> 4.0

COHESIONLESS SOILS

Relative Density	'N' Value
Very Loose	0 – 3
Loose	4 – 9
Medium Dense	10 – 29
Dense	30 – 49
Very Dense	≥ 50

COMPONENT %

Description	Percent (%)
Trace	<5
Few	5 - 10
Little	15 - 25
Some	30 - 45
Mostly	50 - 100

PLASTICITY CHART

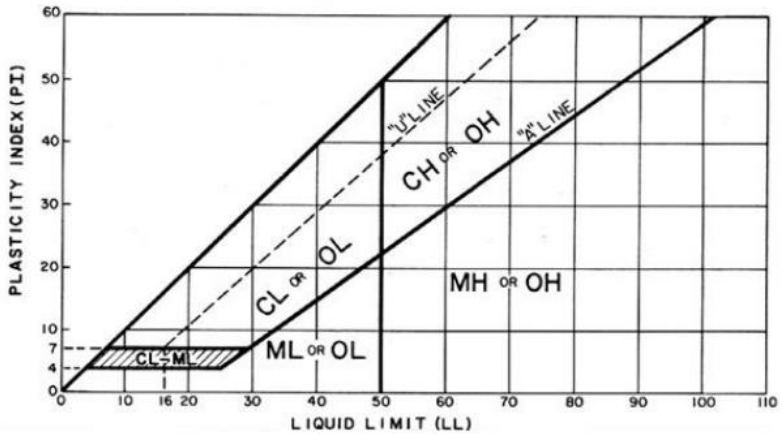

ROCK QUALITY DESIGNATION (RQD)

Description	RQD (%)
Very Poor	0 – 25
Poor	25 – 50
Fair	50 – 75
Good	75 – 90
Excellent	90 – 100

olsson

BOREHOLE REPORT NO. B-1

Sheet 1 of 1

PROJECT NAME	CLIENT
Joplin 32nd Street Widening	City of Joplin, MO
PROJECT NUMBER	**LOCATION**
015-2768	Joplin, Missouri

Shelby Tube

APPROX. SURFACE ELEV. (ft): 982.5

ELEVATION (ft)	MATERIAL DESCRIPTION	GRAPHIC LOG	DEPTH (ft)	SAMPLE TYPE NUMBER	CLASSIFICATION (USCS)	BLOWS/6" N-VALUE	UNC. STR. (tsf)	MOISTURE (%)	DRY DENSITY (pcf)	LL/PI (%)	ADDITIONAL DATA/ REMARKS
			0								
	0.5' *6.25" ASPHALTIC CONCRETE*										
	LEAN TO FAT CLAY										
980	*Very stiff to stiff, moist, yellowish brown with red and gray, trace sand*			U 1				16.3			PP = 3.5
	5.0'		5	U 2				13.1			PP = 1.5

BASE OF BORING AT 5.0 FEET

WATER LEVEL OBSERVATIONS	
WD	▽ Not Performed
IAD	▼ Not Performed
AD	▼ Not Performed

OLSSON, INC.
302 E. MILLSAP ROAD
FAYETTEVILLE, ARKANSAS 72703

STARTED:	12/8/15	FINISHED:	12/8/15
DRILL CO.:	OLSSON	DRILL RIG:	CME 45
DRILLER:	JOSH	LOGGED BY:	CURT
METHOD: CONTINUOUS FLIGHT AUGER			

BOREHOLE REPORT NO. B-2

Sheet 1 of 1

PROJECT NAME	CLIENT
Joplin 32nd Street Widening	City of Joplin, MO
PROJECT NUMBER	**LOCATION**
015-2768	Joplin, Missouri

ELEVATION (ft)	MATERIAL DESCRIPTION	GRAPHIC LOG	DEPTH (ft)	SAMPLE TYPE NUMBER	CLASSIFICATION (USCS)	BLOWS/6" N-VALUE	UNC. STR. (tsf)	MOISTURE (%)	DRY DENSITY (pcf)	LL/PI (%)	ADDITIONAL DATA/ REMARKS
1000	**APPROX. SURFACE ELEV. (ft):** 1000.0		0								
	3.75" ASPHALTIC CONCRETE (0.3')										
	LEAN TO FAT CLAY *Stiff, moist, brown with yellow and dark brown, trace sand*			SS 1		8-7-6 N=13		12.8			
	(3.5')										
995	*Stiff, moist, reddish brown with yellow and brown, trace sand* (5.0')		5	SS 2		11-14-12 N=26		8.9			

BASE OF BORING AT 5.0 FEET

WATER LEVEL OBSERVATIONS	
WD	Not Performed
IAD	Not Performed
AD	Not Performed

OLSSON, INC.
302 E. MILLSAP ROAD
FAYETTEVILLE, ARKANSAS 72703

STARTED:	12/8/15	FINISHED:	12/8/15
DRILL CO.:	OLSSON	DRILL RIG:	CME 45
DRILLER:	JOSH	LOGGED BY:	CURT
METHOD: CONTINUOUS FLIGHT AUGER			

BOREHOLE REPORT NO. B-3

Sheet 1 of 1

PROJECT NAME	CLIENT
Joplin 32nd Street Widening	City of Joplin, MO
PROJECT NUMBER	**LOCATION**
015-2768	Joplin, Missouri

Split Spoon

APPROX. SURFACE ELEV. (ft): 1028.0

ELEVATION (ft)	MATERIAL DESCRIPTION	GRAPHIC LOG	DEPTH (ft)	SAMPLE TYPE NUMBER	CLASSIFICATION (USCS)	BLOWS/6" N-VALUE	UNC. STR. (tsf)	MOISTURE (%)	DRY DENSITY (pcf)	LL/PI (%)	ADDITIONAL DATA/ REMARKS
	0.3'		0								
	3.75" ASPHALTIC CONCRETE										
	LEAN TO FAT CLAY			SS 1		26-50/3"		11.1			
1025	*Hard, dry to moist, brown to reddish brown, sandy, with chert*										
				SS 2		23-36-25 N=61		5.2			
	5.0'		5								

BASE OF BORING AT 5.0 FEET

WATER LEVEL OBSERVATIONS	
WD	Not Performed
IAD	Not Performed
AD	Not Performed

OLSSON, INC.
302 E. MILLSAP ROAD
FAYETTEVILLE, ARKANSAS 72703

STARTED:	12/8/15	FINISHED:	12/8/15
DRILL CO.:	OLSSON	DRILL RIG:	CME 45
DRILLER:	JOSH	LOGGED BY:	CURT
METHOD: CONTINUOUS FLIGHT AUGER			

olsson

BOREHOLE REPORT NO. B-4

Sheet 1 of 1

PROJECT NAME	CLIENT
Joplin 32nd Street Widening	City of Joplin, MO
PROJECT NUMBER	**LOCATION**
015-2768	Joplin, Missouri

Split Spoon

APPROX. SURFACE ELEV. (ft): 1040.9

ELEVATION (ft)	MATERIAL DESCRIPTION	GRAPHIC LOG	DEPTH (ft)	SAMPLE TYPE NUMBER	CLASSIFICATION (USCS)	BLOWS/6" N-VALUE	UNC. STR. (tsf)	MOISTURE (%)	DRY DENSITY (pcf)	LL/PI (%)	ADDITIONAL DATA/ REMARKS
			0								
1040	***0.4'*** ***4.5" ASPHALTIC CONCRETE***										
	LEAN TO FAT CLAY *Hard to stiff, dry, brown to reddish brown, sandy,*			SS 1		20-23-25 N=48		2.3			
	5.0'		5	SS 2		6-5-4 N=9		8.6			

BASE OF BORING AT 5.0 FEET

WATER LEVEL OBSERVATIONS	
WD	▽ Not Performed
IAD	▼ Not Performed
AD	▼ Not Performed

OLSSON, INC.
302 E. MILLSAP ROAD
FAYETTEVILLE, ARKANSAS 72703

STARTED:	12/8/15	FINISHED:	12/8/15
DRILL CO.:	OLSSON	DRILL RIG:	CME 45
DRILLER:	JOSH	LOGGED BY:	CURT
METHOD: CONTINUOUS FLIGHT AUGER			

olsson	BOREHOLE REPORT NO. B-5	Sheet 1 of 1

PROJECT NAME	CLIENT
Joplin 32nd Street Widening	City of Joplin, MO
PROJECT NUMBER	**LOCATION**
015-2768	Joplin, Missouri

Split Spoon

ELEVATION (ft)	MATERIAL DESCRIPTION	GRAPHIC LOG	DEPTH (ft)	SAMPLE TYPE NUMBER	CLASSIFICATION (USCS)	BLOWS/6" N-VALUE	UNC. STR. (tsf)	MOISTURE (%)	DRY DENSITY (pcf)	LL/PI (%)	ADDITIONAL DATA/ REMARKS
	APPROX. SURFACE ELEV. (ft): 1030.8		0								
1030	***6.5" ASPHALTIC CONCRETE*** *0.5'*										
	LEAN TO FAT CLAY			SS 1		8-8-5 N=13		20.3			
	Stiff to hard, moist, brown, with sand and chert										
				SS 2		12-15-30 N=45		18.7			
	5.0'		5								

BASE OF BORING AT 5.0 FEET

WATER LEVEL OBSERVATIONS	
WD	▽ Not Performed
IAD	▼ Not Performed
AD	▼ Not Performed

OLSSON, INC.
302 E. MILLSAP ROAD
FAYETTEVILLE, ARKANSAS 72703

STARTED:	12/8/15	FINISHED:	12/8/15
DRILL CO.:	OLSSON	DRILL RIG:	CME 45
DRILLER:	JOSH	LOGGED BY:	CURT
METHOD: CONTINUOUS FLIGHT AUGER			

BOREHOLE REPORT NO. B-6

Sheet 1 of 1

PROJECT NAME	CLIENT
Joplin 32nd Street Widening	City of Joplin, MO
PROJECT NUMBER	**LOCATION**
015-2768	Joplin, Missouri

Split Spoon

APPROX. SURFACE ELEV. (ft): 991.7

ELEVATION (ft)	MATERIAL DESCRIPTION	GRAPHIC LOG	DEPTH (ft)	SAMPLE TYPE NUMBER	CLASSIFICATION (USCS)	BLOWS/6" N-VALUE	UNC. STR. (tsf)	MOISTURE (%)	DRY DENSITY (pcf)	LL/PI (%)	ADDITIONAL DATA/ REMARKS
			0								
	0.5' ***5.75" ASPHALTIC CONCRETE***										
990	***FAT CLAY*** *Stiff to hard, moist, brown with red and yellow, with sand*			SS 1		5-5-8 N=13		13.8			
	5.0'		5	SS 2		8-12-23 N=35		14.9			

BASE OF BORING AT 5.0 FEET

WATER LEVEL OBSERVATIONS	
WD	Not Performed
IAD	Not Performed
AD	Not Performed

OLSSON, INC.
302 E. MILLSAP ROAD
FAYETTEVILLE, ARKANSAS 72703

STARTED:	12/8/15	FINISHED:	12/8/15
DRILL CO.:	OLSSON	DRILL RIG:	CME 45
DRILLER:	JOSH	LOGGED BY:	CURT
METHOD: CONTINUOUS FLIGHT AUGER			

BOREHOLE REPORT NO. B-7

Sheet 1 of 1

PROJECT NAME	CLIENT
Joplin 32nd Street Widening	City of Joplin, MO
PROJECT NUMBER	**LOCATION**
015-2768	Joplin, Missouri

Split Spoon

ELEVATION (ft)	MATERIAL DESCRIPTION	GRAPHIC LOG	DEPTH (ft)	SAMPLE TYPE NUMBER	CLASSIFICATION (USCS)	BLOWS/6" N-VALUE	UNC. STR. (tsf)	MOISTURE (%)	DRY DENSITY (pcf)	LL/PI (%)	ADDITIONAL DATA/ REMARKS
970	**APPROX. SURFACE ELEV. (ft):** 970.1		0								
	0.4'										
	5.25" ASPHALTIC CONCRETE										
	LEAN TO FAT CLAY										
	Very stiff to stiff, dry to moist, brown, with sand and chert			SS 1		5-9-7 N=16		17.4			
				SS 2		7-7-6 N=13		9.7			
965			5								
	6.0'										
	CHERT										
	With sand and lean clay										
				SS 3		4-25-34 N=59		11.4		36/18	P-200 = 34.5%
	10.0'		10								

BASE OF BORING AT 10.0 FEET

WATER LEVEL OBSERVATIONS	
WD	▽ Not Performed
IAD	▼ Not Performed
AD	▼ Not Performed

OLSSON, INC.
302 E. MILLSAP ROAD
FAYETTEVILLE, ARKANSAS 72703

STARTED:	12/8/15	FINISHED:	12/8/15
DRILL CO.:	OLSSON	DRILL RIG:	CME 45
DRILLER:	JOSH	LOGGED BY:	CURT
METHOD: CONTINUOUS FLIGHT AUGER			

BOREHOLE REPORT NO. B-8

Sheet 1 of 1

PROJECT NAME	CLIENT
Joplin 32nd Street Widening	City of Joplin, MO
PROJECT NUMBER	**LOCATION**
015-2768	Joplin, Missouri

Split Spoon

APPROX. SURFACE ELEV. (ft): 1014.9

ELEVATION (ft)	MATERIAL DESCRIPTION	GRAPHIC LOG	DEPTH (ft)	SAMPLE TYPE NUMBER	CLASSIFICATION (USCS)	BLOWS/6" N-VALUE	UNC. STR. (tsf)	MOISTURE (%)	DRY DENSITY (pcf)	LL/PI (%)	ADDITIONAL DATA/ REMARKS
	0.4'		0								
	4.75" ASPHALTIC CONCRETE										
	LEAN TO FAT CLAY			SS 1		40-50/3"		7.6			
	Hard to very stiff, dry, brown, trace reddish brown, cherty, sandy										
1010			5	SS 2		12-14-13 N=27		4.5			
	8.5'										
	Hard to very stiff, dry to moist, reddish brown, with chert and sand										
1005			10	SS 3		19-25-29 N=54		13.5			
1000			15	SS 4		8-10-14 N=24		15.6			
995			20	SS 5		42-26-18 N=44		13.1			
	20.0'										
	BASE OF BORING AT 20.0 FEET										

WATER LEVEL OBSERVATIONS	
WD	Not Performed
IAD	Not Performed
AD	Not Performed

OLSSON, INC.
302 E. MILLSAP ROAD
FAYETTEVILLE, ARKANSAS 72703

STARTED:	12/9/15	FINISHED:	12/9/15
DRILL CO.:	OLSSON	DRILL RIG:	CME 45
DRILLER:	JOSH	LOGGED BY:	CURT
METHOD: CONTINUOUS FLIGHT AUGER			

olsson

BOREHOLE REPORT NO. B-9

Sheet 1 of 1

PROJECT NAME	CLIENT
Joplin 32nd Street Widening	City of Joplin, MO
PROJECT NUMBER	**LOCATION**
015-2768	Joplin, Missouri

Split Spoon

APPROX. SURFACE ELEV. (ft): 1039.8

ELEVATION (ft)	MATERIAL DESCRIPTION	GRAPHIC LOG	DEPTH (ft)	SAMPLE TYPE NUMBER	CLASSIFICATION (USCS)	BLOWS/6" N-VALUE	UNC. STR. (tsf)	MOISTURE (%)	DRY DENSITY (pcf)	LL/PI (%)	ADDITIONAL DATA/ REMARKS
			0								
	0.3'										
	3.75" ASPHALTIC CONCRETE										
	LEAN TO FAT CLAY										
	Stiff to hard, dry to moist, brown to red, with sand and chert			SS 1		8-6-6 N=12		10.9			
1035	***5.0'***		5	SS 2		9-12-24 N=36		16.6			

BASE OF BORING AT 5.0 FEET

WATER LEVEL OBSERVATIONS	
WD	▽ Not Performed
IAD	▼ Not Performed
AD	▼ Not Performed

OLSSON, INC.
302 E. MILLSAP ROAD
FAYETTEVILLE, ARKANSAS 72703

STARTED:	12/9/15	FINISHED:	12/9/15
DRILL CO.:	OLSSON	DRILL RIG:	CME 45
DRILLER:	JOSH	LOGGED BY:	CURT
METHOD: CONTINUOUS FLIGHT AUGER			

BOREHOLE REPORT NO. B-10

Sheet 1 of 1

PROJECT NAME	CLIENT
Joplin 32nd Street Widening	City of Joplin, MO
PROJECT NUMBER	**LOCATION**
015-2768	Joplin, Missouri

Split Spoon

ELEVATION (ft)	MATERIAL DESCRIPTION	GRAPHIC LOG	DEPTH (ft)	SAMPLE TYPE NUMBER	CLASSIFICATION (USCS)	BLOWS/6" N-VALUE	UNC. STR. (tsf)	MOISTURE (%)	DRY DENSITY (pcf)	LL/PI (%)	ADDITIONAL DATA/ REMARKS
1050	**APPROX. SURFACE ELEV. (ft):**1050.0		0								
	1.75" ASPHALTIC CONCRETE										
	0.1'										
	LEAN TO FAT CLAY										
	Very stiff, dry, brown to reddish brown, with sand and chert			SS 1		14-13-9 N=22		4.0			
	3.5'										
	Very stiff, moist, reddish brown, sandy, with chert			SS 2		3-6-14 N=20		14.2			
1045			5								
	8.5'										
	WEATHERED SHALE			SS 3		28-50/2.5"		7.6			
	9.2'										
	Light gray with yellow and reddish brown, with clay										
	BASE OF BORING AT 9.2 FEET										

WATER LEVEL OBSERVATIONS	
WD	▽ Not Performed
IAD	▼ Not Performed
AD	▼ Not Performed

OLSSON, INC.
302 E. MILLSAP ROAD
FAYETTEVILLE, ARKANSAS 72703

STARTED:	12/9/15	FINISHED:	12/9/15
DRILL CO.:	OLSSON	DRILL RIG:	CME 45
DRILLER:	JOSH	LOGGED BY:	CURT
METHOD: CONTINUOUS FLIGHT AUGER			

olsson

BOREHOLE REPORT NO. B-11

Sheet 1 of 1

PROJECT NAME	CLIENT
Joplin 32nd Street Widening	City of Joplin, MO
PROJECT NUMBER	**LOCATION**
015-2768	Joplin, Missouri

Shelby Tube

APPROX. SURFACE ELEV. (ft): 1044.6

ELEVATION (ft)	MATERIAL DESCRIPTION	GRAPHIC LOG	DEPTH (ft)	SAMPLE TYPE NUMBER	CLASSIFICATION (USCS)	BLOWS/6" N-VALUE	UNC. STR. (tsf)	MOISTURE (%)	DRY DENSITY (pcf)	LL/PI (%)	ADDITIONAL DATA/ REMARKS
			0								
	0.3' ***3.5" ASPHALTIC CONCRETE***										
	FAT CLAY *Very stiff to hard, moist, brown to red with gray and yellow, with sand*			U 1				28.5			PP = 3.5
1040			5	U 2				26.3	101.4		PP = 4.5+
1035	***10.0'***		10	U 3				19.9	112.4	67/37	PP = 4.5+

BASE OF BORING AT 10.0 FEET

WATER LEVEL OBSERVATIONS	
WD	▽ Not Performed
IAD	▼ Not Performed
AD	▼ Not Performed

OLSSON, INC.
302 E. MILLSAP ROAD
FAYETTEVILLE, ARKANSAS 72703

STARTED:	12/9/15	FINISHED:	12/9/15
DRILL CO.:	OLSSON	DRILL RIG:	CME 45
DRILLER:	JOSH	LOGGED BY:	CURT
METHOD: CONTINUOUS FLIGHT AUGER			

BOREHOLE REPORT NO. B-12

Sheet 1 of 1

PROJECT NAME	CLIENT
Joplin 32nd Street Widening	City of Joplin, MO
PROJECT NUMBER	**LOCATION**
015-2768	Joplin, Missouri

Split Spoon

APPROX. SURFACE ELEV. (ft): 1022.7

ELEVATION (ft)	MATERIAL DESCRIPTION	GRAPHIC LOG	DEPTH (ft)	SAMPLE TYPE NUMBER	CLASSIFICATION (USCS)	BLOWS/6" N-VALUE	UNC. STR. (tsf)	MOISTURE (%)	DRY DENSITY (pcf)	LL/PI (%)	ADDITIONAL DATA/ REMARKS
			0								
	0.5' ***6.25" ASPHALTIC CONCRETE***										
	LEAN TO FAT CLAY *Hard, moist, reddish brown, with sand and chert*			SS 1		25-46-29 N=75		13.8			
1020											
	5.0'		5	SS 2		12-14-22 N=36		14.9			

BASE OF BORING AT 5.0 FEET

WATER LEVEL OBSERVATIONS	
WD	Not Performed
IAD	Not Performed
AD	Not Performed

OLSSON, INC.
302 E. MILLSAP ROAD
FAYETTEVILLE, ARKANSAS 72703

STARTED:	12/9/15	FINISHED:	12/9/15
DRILL CO.:	OLSSON	DRILL RIG:	CME 45
DRILLER:	JOSH	LOGGED BY:	CURT
METHOD: CONTINUOUS FLIGHT AUGER			

olsson

BOREHOLE REPORT NO. B-13

Sheet 1 of 1

PROJECT NAME	CLIENT
Joplin 32nd Street Widening	City of Joplin, MO
PROJECT NUMBER	**LOCATION**
015-2768	Joplin, Missouri

Split Spoon

APPROX. SURFACE ELEV. (ft): 1027.6

ELEVATION (ft)	MATERIAL DESCRIPTION	GRAPHIC LOG	DEPTH (ft)	SAMPLE TYPE NUMBER	CLASSIFICATION (USCS)	BLOWS/6" N-VALUE	UNC. STR. (tsf)	MOISTURE (%)	DRY DENSITY (pcf)	LL/PI (%)	ADDITIONAL DATA/ REMARKS
	0.4' ***4.5" ASPHALTIC CONCRETE***		0								
	LEAN TO FAT CLAY										
1025	*Very stiff to hard, moist, reddish brown, with sand and chert*			SS 1		11-10-7 N=17		15.0			
			5	SS 2		10-12-20 N=32		19.3			
1020											
	8.5' *Hard, moist, reddish brown, cherty, with sand*		10	SS 3		12-20-50 N=70		29.5			
	10.0' ***BASE OF BORING AT 10.0 FEET***										

WATER LEVEL OBSERVATIONS	
WD	Not Performed
IAD	Not Performed
AD	Not Performed

OLSSON, INC.
302 E. MILLSAP ROAD
FAYETTEVILLE, ARKANSAS 72703

STARTED:	12/9/15	FINISHED:	12/9/15
DRILL CO.:	OLSSON	DRILL RIG:	CME 45
DRILLER:	JOSH	LOGGED BY:	CURT
METHOD: CONTINUOUS FLIGHT AUGER			

olsson

BOREHOLE REPORT NO. B-14

Sheet 1 of 1

PROJECT NAME	CLIENT
Joplin 32nd Street Widening	City of Joplin, MO
PROJECT NUMBER	**LOCATION**
015-2768	Joplin, Missouri

Split Spoon

APPROX. SURFACE ELEV. (ft): 1029.7

ELEVATION (ft)	MATERIAL DESCRIPTION	GRAPHIC LOG	DEPTH (ft)	SAMPLE TYPE NUMBER	CLASSIFICATION (USCS)	BLOWS/6" N-VALUE	UNC. STR. (tsf)	MOISTURE (%)	DRY DENSITY (pcf)	LL/PI (%)	ADDITIONAL DATA/ REMARKS
	0.4'		0								
	5.25" ASPHALTIC CONCRETE										
	LEAN TO FAT CLAY										
	Firm to very stiff, moist, reddish brown, with sand and chert			SS 1		2-3-5 N=8		18.8			
1025				SS 2		6-9-10 N=19		11.9			
	5.0'		5								

BASE OF BORING AT 5.0 FEET

WATER LEVEL OBSERVATIONS	
WD	▽ Not Performed
IAD	▼ Not Performed
AD	▼ Not Performed

OLSSON, INC.
302 E. MILLSAP ROAD
FAYETTEVILLE, ARKANSAS 72703

STARTED:	12/9/15	FINISHED:	12/9/15
DRILL CO.:	OLSSON	DRILL RIG:	CME 45
DRILLER:	JOSH	LOGGED BY:	CURT
METHOD: CONTINUOUS FLIGHT AUGER			

BOREHOLE REPORT NO. B-15

Sheet 1 of 1

PROJECT NAME	CLIENT
Joplin 32nd Street Widening	City of Joplin, MO
PROJECT NUMBER	**LOCATION**
015-2768	Joplin, Missouri

Split Spoon

APPROX. SURFACE ELEV. (ft): 1029.2

ELEVATION (ft)	MATERIAL DESCRIPTION	GRAPHIC LOG	DEPTH (ft)	SAMPLE TYPE NUMBER	CLASSIFICATION (USCS)	BLOWS/6" N-VALUE	UNC. STR. (tsf)	MOISTURE (%)	DRY DENSITY (pcf)	LL/PI (%)	ADDITIONAL DATA/ REMARKS
	0.5'		0								
	5.5" ASPHALTIC CONCRETE										
	LEAN TO FAT CLAY										
	Firm to stiff, dry to moist, brown with red, with sand and chert			SS 1		5-4-4 N=8		8.5			
1025				SS 2		3-4-5 N=9		20.6			
	5.0'		5								

BASE OF BORING AT 5.0 FEET

WATER LEVEL OBSERVATIONS	
WD	Not Performed
IAD	Not Performed
AD	Not Performed

OLSSON, INC.
302 E. MILLSAP ROAD
FAYETTEVILLE, ARKANSAS 72703

STARTED:	12/9/15	FINISHED:	12/9/15
DRILL CO.:	OLSSON	DRILL RIG:	CME 45
DRILLER:	JOSH	LOGGED BY:	CURT
METHOD: CONTINUOUS FLIGHT AUGER			

BOREHOLE REPORT NO. B-16

Sheet 1 of 1

PROJECT NAME	CLIENT
Joplin 32nd Street Widening	City of Joplin, MO
PROJECT NUMBER	**LOCATION**
015-2768	Joplin, Missouri

Shelby Tube

APPROX. SURFACE ELEV. (ft): 1022.8

ELEVATION (ft)	MATERIAL DESCRIPTION	GRAPHIC LOG	DEPTH (ft)	SAMPLE TYPE NUMBER	CLASSIFICATION (USCS)	BLOWS/6" N-VALUE	UNC. STR. (tsf)	MOISTURE (%)	DRY DENSITY (pcf)	LL/PI (%)	ADDITIONAL DATA/ REMARKS
			0								
	6.75" ASPHALTIC CONCRETE ***0.6'***										
	FAT CLAY										
	Very stiff, moist, red with brown, with sand, trace chert			U 1				25.7	97.2		PP = 3.0
1020											
				U 2				24.0	96.7		PP = 2.5
	5.0'		5								

BASE OF BORING AT 5.0 FEET

WATER LEVEL OBSERVATIONS	
WD	▽ Not Performed
IAD	▼ Not Performed
AD	▼ Not Performed

OLSSON, INC.
302 E. MILLSAP ROAD
FAYETTEVILLE, ARKANSAS 72703

STARTED:	12/9/15	FINISHED:	12/9/15
DRILL CO.:	OLSSON	DRILL RIG:	CME 45
DRILLER:	JOSH	LOGGED BY:	CURT
METHOD: CONTINUOUS FLIGHT AUGER			

BOREHOLE REPORT NO. B-101

Sheet 1 of 1

PROJECT NAME	CLIENT
Joplin 32nd Street Widening	City of Joplin, MO
PROJECT NUMBER	**LOCATION**
015-2768	Joplin, Missouri

Split Spoon

APPROX. SURFACE ELEV. (ft): 1029.7

ELEVATION (ft)	MATERIAL DESCRIPTION	GRAPHIC LOG	DEPTH (ft)	SAMPLE TYPE NUMBER	CLASSIFICATION (USCS)	BLOWS/6" N-VALUE	UNC. STR. (tsf)	MOISTURE (%)	DRY DENSITY (pcf)	LL/PI (%)	ADDITIONAL DATA/ REMARKS
	9.75" ASPHALTIC CONCRETE ***0.8'***		0								
	LEAN CLAY *Stiff, dry to moist, brown, with silt*			SS 1		3-8-4 N=12		16.4			
	4.0'			SS 2		4-17-18 N=35		17.5			
1025	*Very stiff to hard, dry to moist, reddish brown, with chert and sand*		5								
1020	***10.0'***		10	SS 3		5-11-17 N=28		29.1		39/22	
	FAT CLAY *Very stiff, moist, red, with chert and weathered shale*										
1015	***15.0'***		15	SS 4		16-14-15 N=29		21.6			

BASE OF BORING AT 15.0 FEET

WATER LEVEL OBSERVATIONS	
WD	▽ Not Encountered
IAD	▼ Not Encountered
AD	▼ Not Performed

OLSSON, INC.
302 E. MILLSAP ROAD
FAYETTEVILLE, ARKANSAS 72703

STARTED:	11/13/19	FINISHED:	11/13/19
DRILL CO.:	OLSSON	DRILL RIG:	CME 45B
DRILLER:	K. KEMPTON	LOGGED BY:	D Martin
METHOD:	CONTINUOUS FLIGHT AUGER		

olsson

BOREHOLE REPORT NO. B-102

Sheet 1 of 1

PROJECT NAME: Joplin 32nd Street Widening	CLIENT: City of Joplin, MO
PROJECT NUMBER: 015-2768	LOCATION: Joplin, Missouri

Split Spoon

APPROX. SURFACE ELEV. (ft): 1030.9

ELEVATION (ft)	MATERIAL DESCRIPTION	GRAPHIC LOG	DEPTH (ft)	SAMPLE TYPE NUMBER	CLASSIFICATION (USCS)	BLOWS/6" N-VALUE	UNC. STR. (tsf)	MOISTURE (%)	DRY DENSITY (pcf)	LL/PI (%)	ADDITIONAL DATA/ REMARKS
1030	***9.25" ASPHALTIC CONCRETE*** ***0.8'***		0								
	LEAN CLAY *Firm, dry to moist, brown, with chert and sand*			SS 1		6-3-4 N=7		16.4			
	4.0'			SS 2		6-12-20 N=32		32.1			
1025	***FAT CLAY*** *Hard to very stiff, moist, red and yellow, with chert, sand, and weathered shale*		5								
			10	SS 3		12-14-12 N=26		33.2			
1020											
	14.0'			SS 4		13-25-50/3"		12.3			
	Hard, dry to moist, red, cherty ***14.8'***										

BASE OF BORING AT 14.8 FEET

WATER LEVEL OBSERVATIONS	
WD	▽ Not Encountered
IAD	▼ Not Encountered
AD	▼ Not Performed

OLSSON, INC.
302 E. MILLSAP ROAD
FAYETTEVILLE, ARKANSAS 72703

STARTED:	11/13/19	FINISHED:	11/13/19
DRILL CO.:	OLSSON	DRILL RIG:	CME 45B
DRILLER:	K. KEMPTON	LOGGED BY:	D Martin
METHOD: CONTINUOUS FLIGHT AUGER			

BOREHOLE REPORT NO. B-103

Sheet 1 of 1

PROJECT NAME	CLIENT
Joplin 32nd Street Widening	City of Joplin, MO
PROJECT NUMBER	**LOCATION**
015-2768	Joplin, Missouri

Split Spoon

APPROX. SURFACE ELEV. (ft): 1000.3

ELEVATION (ft)	MATERIAL DESCRIPTION	GRAPHIC LOG	DEPTH (ft)	SAMPLE TYPE NUMBER	CLASSIFICATION (USCS)	BLOWS/6" N-VALUE	UNC. STR. (tsf)	MOISTURE (%)	DRY DENSITY (pcf)	LL/PI (%)	ADDITIONAL DATA/ REMARKS
1000	***7.25" ASPHALTIC CONCRETE*** *0.6'*		0								
	LEAN CLAY *Stiff to very stiff, dry to moist, reddish brown, with chert*			SS 1		8-7-8 N=15		14.6			
				SS 2		5-8-11 N=19		30.9		39/19	
995			5								
	FAT CLAY *7.0'* *Hard, dry, red with gray, shaley, with chert*										
	10.0'		10	SS 3		23-27-32 N=59		11.3			

BASE OF BORING AT 10.0 FEET

WATER LEVEL OBSERVATIONS	
WD	▽ Not Encountered
IAD	▼ Not Encountered
AD	▼ Not Performed

OLSSON, INC.
302 E. MILLSAP ROAD
FAYETTEVILLE, ARKANSAS 72703

STARTED:	11/13/19	FINISHED:	11/13/19
DRILL CO.:	OLSSON	DRILL RIG:	CME 45B
DRILLER:	K. KEMPTON	LOGGED BY:	D Martin
METHOD:	CONTINUOUS FLIGHT AUGER		

BOREHOLE REPORT NO. B-104

Sheet 1 of 1

PROJECT NAME	CLIENT
Joplin 32nd Street Widening	City of Joplin, MO
PROJECT NUMBER	**LOCATION**
015-2768	Joplin, Missouri

Split Spoon

APPROX. SURFACE ELEV. (ft): 1025.2

ELEVATION (ft)	MATERIAL DESCRIPTION	GRAPHIC LOG	DEPTH (ft)	SAMPLE TYPE NUMBER	CLASSIFICATION (USCS)	BLOWS/6" N-VALUE	UNC. STR. (tsf)	MOISTURE (%)	DRY DENSITY (pcf)	LL/PI (%)	ADDITIONAL DATA/ REMARKS
1025	***8.5" ASPHALTIC CONCRETE*** ***0.7'***		0								
	LEAN TO FAT CLAY *Very stiff to firm, dry to moist, brown, with chert*			SS 1		19-10-9 N=19		10.8			
	5.0'		5	SS 2		6-4-3 N=7		14.2			

BASE OF BORING AT 5.0 FEET

WATER LEVEL OBSERVATIONS	
WD	▽ Not Encountered
IAD	▼ Not Encountered
AD	▼ Not Performed

OLSSON, INC.
302 E. MILLSAP ROAD
FAYETTEVILLE, ARKANSAS 72703

STARTED:	11/13/19	FINISHED:	11/13/19
DRILL CO.:	OLSSON	DRILL RIG:	CME 45B
DRILLER:	K. KEMPTON	LOGGED BY:	D Martin
METHOD:	CONTINUOUS FLIGHT AUGER		

BOREHOLE REPORT NO. B-105

PROJECT NAME: Joplin 32nd Street Widening	CLIENT: City of Joplin, MO
PROJECT NUMBER: 015-2768	LOCATION: Joplin, Missouri

Split Spoon

APPROX. SURFACE ELEV. (ft): 1030.9

ELEVATION (ft)	MATERIAL DESCRIPTION	GRAPHIC LOG	DEPTH (ft)	SAMPLE TYPE NUMBER	CLASSIFICATION (USCS)	BLOWS/6" N-VALUE	UNC. STR. (tsf)	MOISTURE (%)	DRY DENSITY (pcf)	LL/PI (%)	ADDITIONAL DATA/ REMARKS
1030	***11.25" ASPHALTIC CONCRETE*** *0.9'*		0								
	FAT CLAY *Very stiff to hard, moist, reddish brown, with chert*			SS 1		11-9-15 N=24		22.6		56/34	
				SS 2		36-21-14 N=35		17.9			
1025	*5.8'*		5								
	CHERT *With reddish brown clay*										
	9.0'			SS 3		25-50/0"		9.2			
	FAT CLAY *Hard, moist, red, cherty, with weathered shale*		10								
1020				SS 4		20-50/3"		12.5			
			15								
1015				SS 5		39-50/2"		17.7			
			20								

CONTINUED NEXT PAGE

WATER LEVEL OBSERVATIONS	
WD	▽ Not Encountered
IAD	▼ Not Encountered
AD	▼ Not Performed

OLSSON, INC.
302 E. MILLSAP ROAD
FAYETTEVILLE, ARKANSAS 72703

STARTED:	11/12/19	FINISHED:	11/12/19
DRILL CO.:	OLSSON	DRILL RIG:	CME 45B
DRILLER:	K. KEMPTON	LOGGED BY:	D Martin
METHOD: CONTINUOUS FLIGHT AUGER			

olsson

BOREHOLE REPORT NO. B-105

PROJECT NAME	CLIENT
Joplin 32nd Street Widening	City of Joplin, MO
PROJECT NUMBER	**LOCATION**
015-2768	Joplin, Missouri

☒ Split Spoon

ELEVATION (ft)	MATERIAL DESCRIPTION	GRAPHIC LOG	DEPTH (ft)	SAMPLE TYPE NUMBER	CLASSIFICATION (USCS)	BLOWS/6" N-VALUE	UNC. STR. (tsf)	MOISTURE (%)	DRY DENSITY (pcf)	LL/PI (%)	ADDITIONAL DATA/ REMARKS
			20								
1010	***FAT CLAY*** *Hard, moist, red, cherty, with weathered shale (continued)*										
	23.9'			☒ SS 6		50/5"		12.5			
	BASE OF BORING AT 23.9 FEET										

WATER LEVEL OBSERVATIONS	
WD	▽ Not Encountered
IAD	▼ Not Encountered
AD	▼ Not Performed

OLSSON, INC.
302 E. MILLSAP ROAD
FAYETTEVILLE, ARKANSAS 72703

STARTED:	11/12/19	FINISHED:	11/12/19
DRILL CO.:	OLSSON	DRILL RIG:	CME 45B
DRILLER:	K. KEMPTON	LOGGED BY:	D Martin
METHOD:	CONTINUOUS FLIGHT AUGER		

olsson

BOREHOLE REPORT NO. B-106

Sheet 1 of 1

PROJECT NAME	CLIENT
Joplin 32nd Street Widening	City of Joplin, MO
PROJECT NUMBER	**LOCATION**
015-2768	Joplin, Missouri

Split Spoon

APPROX. SURFACE ELEV. (ft): 1040.6

ELEVATION (ft)	MATERIAL DESCRIPTION	GRAPHIC LOG	DEPTH (ft)	SAMPLE TYPE NUMBER	CLASSIFICATION (USCS)	BLOWS/6" N-VALUE	UNC. STR. (tsf)	MOISTURE (%)	DRY DENSITY (pcf)	LL/PI (%)	ADDITIONAL DATA/ REMARKS
1040	***7.5" ASPHALTIC CONCRETE*** ***0.6'***		0								
	LEAN TO FAT CLAY *Stiff, dry to moist, brown with yellow, with weathered shale*			SS 1		10-7-4 N=11		10.5			
				SS 2		3-4-5 N=9		29.8			
1035			5								
	8.0'										
	Very stiff to hard, brown to gray, with chert and weathered shale			SS 3		4-13-10 N=23		21.3			
1030			10								
				SS 4		6-27-17 N=44		20.6			
1025			15								
	19.0'			SS 5		20-50/0"					

BASE OF BORING AT 19.0 FEET

WATER LEVEL OBSERVATIONS	
WD	▽ Not Encountered
IAD	▼ Not Encountered
AD	▼ Not Performed

OLSSON, INC.
302 E. MILLSAP ROAD
FAYETTEVILLE, ARKANSAS 72703

STARTED:	11/12/19	FINISHED:	11/12/19
DRILL CO.:	OLSSON	DRILL RIG:	CME 45B
DRILLER:	K. KEMPTON	LOGGED BY:	D Martin
METHOD:	CONTINUOUS FLIGHT AUGER		

olsson

BOREHOLE REPORT NO. B-107

Sheet 1 of 2

PROJECT NAME	CLIENT
Joplin 32nd Street Widening	City of Joplin, MO
PROJECT NUMBER	**LOCATION**
015-2768	Joplin, Missouri

Split Spoon

APPROX. SURFACE ELEV. (ft): 988.3

ELEVATION (ft)	MATERIAL DESCRIPTION	GRAPHIC LOG	DEPTH (ft)	SAMPLE TYPE NUMBER	CLASSIFICATION (USCS)	BLOWS/6" N-VALUE	UNC. STR. (tsf)	MOISTURE (%)	DRY DENSITY (pcf)	LL/PI (%)	ADDITIONAL DATA/ REMARKS
	8.5" ASPHALTIC CONCRETE *0.7'*		0								
	FAT CLAY			SS 1		10-11-17 N=28		7.3			
	Very stiff to hard, dry to moist, reddish brown, with chert and sand										
985				SS 2		11-31-50/6"		11.4			
			5								
980				SS 3		28-50/5"		7.9			
	9.5'										
	Hard, dry to moist, yellowish brown, sandy, with chert and weathered shale		10								
975				SS 4		35-50/5"		11.0			
			15								
970				SS 5		43-50/5"		10.9			
			20								
	CONTINUED NEXT PAGE										

WATER LEVEL OBSERVATIONS	
WD	Not Encountered
IAD	Not Encountered
AD	Not Performed

OLSSON, INC.
302 E. MILLSAP ROAD
FAYETTEVILLE, ARKANSAS 72703

STARTED:	11/12/19	FINISHED:	11/12/19
DRILL CO.:	OLSSON	DRILL RIG:	CME 45B
DRILLER:	K. KEMPTON	LOGGED BY:	D Martin
METHOD:	CONTINUOUS FLIGHT AUGER		

olsson

BOREHOLE REPORT NO. B-107

PROJECT NAME: **Joplin 32nd Street Widening**	CLIENT: **City of Joplin, MO**
PROJECT NUMBER: **015-2768**	LOCATION: **Joplin, Missouri**

Split Spoon

ELEVATION (ft)	MATERIAL DESCRIPTION	GRAPHIC LOG	DEPTH (ft)	SAMPLE TYPE NUMBER	CLASSIFICATION (USCS)	BLOWS/6" N-VALUE	UNC. STR. (tsf)	MOISTURE (%)	DRY DENSITY (pcf)	LL/PI (%)	ADDITIONAL DATA/ REMARKS
			20								
	Hard, dry to moist, yellowish brown, sandy, with chert and weathered shale (continued)										
	23.0'										
965	***CHERT***										
	With clay and weathered shale (Possible Weathered Limestone)			SS 6		50/4"		6.1			
			25								
960											
	28.8'			SS 7		50/3"		10.9			

BASE OF BORING AT 28.8 FEET

WATER LEVEL OBSERVATIONS	
WD	▽ Not Encountered
IAD	▼ Not Encountered
AD	▼ Not Performed

OLSSON, INC.
302 E. MILLSAP ROAD
FAYETTEVILLE, ARKANSAS 72703

STARTED:	11/12/19	FINISHED:	11/12/19
DRILL CO.:	OLSSON	DRILL RIG:	CME 45B
DRILLER:	K. KEMPTON	LOGGED BY:	D Martin
METHOD:	CONTINUOUS FLIGHT AUGER		

BOREHOLE REPORT NO. B-108

PROJECT NAME: Joplin 32nd Street Widening	CLIENT: City of Joplin, MO
PROJECT NUMBER: 015-2768	LOCATION: Joplin, Missouri

Split Spoon

APPROX. SURFACE ELEV. (ft): 977.0

ELEVATION (ft)	MATERIAL DESCRIPTION	GRAPHIC LOG	DEPTH (ft)	SAMPLE TYPE NUMBER	CLASSIFICATION (USCS)	BLOWS/6" N-VALUE	UNC. STR. (tsf)	MOISTURE (%)	DRY DENSITY (pcf)	LL/PI (%)	ADDITIONAL DATA/ REMARKS
	0.4'		0								
	9.75" ASPHALTIC CONCRETE										
975	***LEAN CLAY*** *Stiff to very stiff, dry to moist, brown, with chert*			SS 1		9-9-9 N=18		8.7			
				SS 2		6-6-4 N=10		9.2			
			5								
970											
				SS 3		5-8-9 N=17		12.7		27/9	
			10								
	11.0'										
965	***FAT CLAY*** *Hard, dry to moist, red with yellowish brown, cherty, with weathered shale*										
				SS 4		5-12-19 N=31		12.5			
			15								
960											
				SS 5		38-50/5"		17.6			
			20								

CONTINUED NEXT PAGE

WATER LEVEL OBSERVATIONS	
WD	▽ 23.5 ft
IAD	▼ Not Encountered
AD	▼ Not Performed

OLSSON, INC.
302 E. MILLSAP ROAD
FAYETTEVILLE, ARKANSAS 72703

STARTED:	11/12/19	FINISHED:	11/12/19
DRILL CO.:	OLSSON	DRILL RIG:	CME 45B
DRILLER:	K. KEMPTON	LOGGED BY:	D Martin
METHOD: CONTINUOUS FLIGHT AUGER			

olsson

BOREHOLE REPORT NO. B-108

PROJECT NAME	CLIENT
Joplin 32nd Street Widening	City of Joplin, MO
PROJECT NUMBER	**LOCATION**
015-2768	Joplin, Missouri

Split Spoon

ELEVATION (ft)	MATERIAL DESCRIPTION	GRAPHIC LOG	DEPTH (ft)	SAMPLE TYPE NUMBER	CLASSIFICATION (USCS)	BLOWS/6" N-VALUE	UNC. STR. (tsf)	MOISTURE (%)	DRY DENSITY (pcf)	LL/PI (%)	ADDITIONAL DATA/ REMARKS
			20								
955	***FAT CLAY*** *Hard, dry to moist, red with yellowish brown, cherty, with weathered shale (continued)*			SS 6		50/4"		21.5			
950			25								
	30.0'		30	SS 7		43-36-28 N=64		16.0			

BASE OF BORING AT 30.0 FEET

WATER LEVEL OBSERVATIONS	
WD	▽ 23.5 ft
IAD	▼ Not Encountered
AD	▼ Not Performed

OLSSON, INC.
302 E. MILLSAP ROAD
FAYETTEVILLE, ARKANSAS 72703

STARTED:	11/12/19	FINISHED:	11/12/19
DRILL CO.:	OLSSON	DRILL RIG:	CME 45B
DRILLER:	K. KEMPTON	LOGGED BY:	D Martin
METHOD:	CONTINUOUS FLIGHT AUGER		

BOREHOLE REPORT NO. B-109

Sheet 1 of 1

PROJECT NAME: Joplin 32nd Street Widening	CLIENT: City of Joplin, MO
PROJECT NUMBER: 015-2768	LOCATION: Joplin, Missouri

Split Spoon

APPROX. SURFACE ELEV. (ft): 984.5

ELEVATION (ft)	MATERIAL DESCRIPTION	GRAPHIC LOG	DEPTH (ft)	SAMPLE TYPE NUMBER	CLASSIFICATION (USCS)	BLOWS/6" N-VALUE	UNC. STR. (tsf)	MOISTURE (%)	DRY DENSITY (pcf)	LL/PI (%)	ADDITIONAL DATA/ REMARKS
	8.25" ASPHALTIC CONCRETE ***0.7'***		0								
	FAT CLAY										
	Very stiff, dry to moist, dark brown to brown, with chert			SS 1		20-13-6 N=19		1.8			
980	***4.5'***			SS 2		5-6-9 N=15		12.9			
	Hard, dry, red to reddish brown, sandy, cherty		5								
				SS 3		16-50/3"		9.3			
975			10								
	14.3'			SS 4		32-50/4"		5.2			

BASE OF BORING AT 14.3 FEET

WATER LEVEL OBSERVATIONS	
WD	▽ Not Encountered
IAD	▼ Not Encountered
AD	▼ Not Performed

OLSSON, INC.
302 E. MILLSAP ROAD
FAYETTEVILLE, ARKANSAS 72703

STARTED:	11/13/19	FINISHED:	11/13/19
DRILL CO.:	OLSSON	DRILL RIG:	CME 45B
DRILLER:	K. KEMPTON	LOGGED BY:	D Martin
METHOD: CONTINUOUS FLIGHT AUGER			

olsson

BOREHOLE REPORT NO. B-110

Sheet 1 of 1

PROJECT NAME	CLIENT
Joplin 32nd Street Widening	City of Joplin, MO
PROJECT NUMBER	**LOCATION**
015-2768	Joplin, Missouri

Split Spoon

APPROX. SURFACE ELEV. (ft): 974.2

ELEVATION (ft)	MATERIAL DESCRIPTION	GRAPHIC LOG	DEPTH (ft)	SAMPLE TYPE NUMBER	CLASSIFICATION (USCS)	BLOWS/6" N-VALUE	UNC. STR. (tsf)	MOISTURE (%)	DRY DENSITY (pcf)	LL/PI (%)	ADDITIONAL DATA/ REMARKS
	11.5" ASPHALTIC CONCRETE		0								
	1.0'										
	LEAN CLAY										
	Stiff to hard, dry to moist, brown, cherty			SS 1		15-15-18 N=33		6.2			
970	***4.5'***			SS 2		5-6-4 N=10		10.2			
	FAT CLAY		5								
	Firm, dry to moist, reddish brown, with chert										
965				SS 3		4-4-4 N=8		13.6			
			10								
	13.0'										
	Hard, dry, red with brown, sandy, with chert										
960				SS 4		20-40-36 N=76		7.5			
	15.0'		15								

BASE OF BORING AT 15.0 FEET

WATER LEVEL OBSERVATIONS	
WD	▽ Not Encountered
IAD	▼ Not Encountered
AD	▼ Not Performed

OLSSON, INC.
302 E. MILLSAP ROAD
FAYETTEVILLE, ARKANSAS 72703

STARTED:	11/13/19	FINISHED:	11/13/19
DRILL CO.:	OLSSON	DRILL RIG:	CME 45B
DRILLER:	K. KEMPTON	LOGGED BY:	D Martin
METHOD:	CONTINUOUS FLIGHT AUGER		

olsson

BOREHOLE REPORT NO. B-111

Sheet 1 of 1

PROJECT NAME	CLIENT
Joplin 32nd Street Widening	City of Joplin, MO
PROJECT NUMBER	**LOCATION**
015-2768	Joplin, Missouri

Split Spoon

APPROX. SURFACE ELEV. (ft): 967.7

ELEVATION (ft)	MATERIAL DESCRIPTION	GRAPHIC LOG	DEPTH (ft)	SAMPLE TYPE NUMBER	CLASSIFICATION (USCS)	BLOWS/6" N-VALUE	UNC. STR. (tsf)	MOISTURE (%)	DRY DENSITY (pcf)	LL/PI (%)	ADDITIONAL DATA/ REMARKS
	9" ASPHALTIC CONCRETE ***0.8'***		0								
	LEAN TO FAT CLAY *Stiff to very stiff, dry to moist, red, with chert*			SS 1		10-7-6 N=13		17.1			
965											
				SS 2		4-6-12 N=18		11.8			
			5								
960	***8.0'***										
	LEAN CLAY *Stiff, moist, brown, trace chert*			SS 3		2-2-7 N=9		22.2		30/12	
	11.0'		10								
	FAT CLAY *Dry to moist, reddish brown, with chert*										
955											
	14.4'			SS 4		8-50/5"		12.0			

BASE OF BORING AT 14.4 FEET

WATER LEVEL OBSERVATIONS	
WD	▽ Not Encountered
IAD	▼ Not Encountered
AD	▼ Not Performed

OLSSON, INC.
302 E. MILLSAP ROAD
FAYETTEVILLE, ARKANSAS 72703

STARTED:	11/13/19	FINISHED:	11/13/19
DRILL CO.:	OLSSON	DRILL RIG:	CME 45B
DRILLER:	K. KEMPTON	LOGGED BY:	D Martin
METHOD:	CONTINUOUS FLIGHT AUGER		

BOREHOLE REPORT NO. B-112

Sheet 1 of 1

PROJECT NAME: Joplin 32nd Street Widening	CLIENT: City of Joplin, MO
PROJECT NUMBER: 015-2768	LOCATION: Joplin, Missouri

Split Spoon

APPROX. SURFACE ELEV. (ft): 1000.3

ELEVATION (ft)	MATERIAL DESCRIPTION	GRAPHIC LOG	DEPTH (ft)	SAMPLE TYPE NUMBER	CLASSIFICATION (USCS)	BLOWS/6" N-VALUE	UNC. STR. (tsf)	MOISTURE (%)	DRY DENSITY (pcf)	LL/PI (%)	ADDITIONAL DATA/ REMARKS
1000	***7" ASPHALTIC CONCRETE*** *0.6'*		0								
	FAT CLAY *Hard to stiff, moist, red, with chert*			SS 1		50/6"		10.3			
			5	SS 2		10-4-8 N=12		31.4			
995	*6.5'* ***CHERT*** *7.2'*										
	FAT CLAY *Hard, dry to moist, red, with chert*		10	SS 3		10-25-28 N=53		13.5			
990	*11.0'* ***CHERT*** *12.0'*										
	FAT CLAY *Very stiff, dry to moist, red, with chert*		15	SS 4		10-12-13 N=25		15.6			
	15.0'										

BASE OF BORING AT 15.0 FEET

WATER LEVEL OBSERVATIONS	
WD	▽ Not Encountered
IAD	▼ Not Encountered
AD	▼ Not Performed

OLSSON, INC.
302 E. MILLSAP ROAD
FAYETTEVILLE, ARKANSAS 72703

STARTED:	11/12/19	FINISHED:	11/12/19
DRILL CO.:	OLSSON	DRILL RIG:	CME 45B
DRILLER:	K. KEMPTON	LOGGED BY:	D Martin
METHOD:	CONTINUOUS FLIGHT AUGER		

BOREHOLE REPORT NO. B-113

Sheet 1 of 1

PROJECT NAME	CLIENT
Joplin 32nd Street Widening	City of Joplin, MO
PROJECT NUMBER	**LOCATION**
015-2768	Joplin, Missouri

Split Spoon

APPROX. SURFACE ELEV. (ft): 990.6

ELEVATION (ft)	MATERIAL DESCRIPTION		GRAPHIC LOG	DEPTH (ft)	SAMPLE TYPE NUMBER	CLASSIFICATION (USCS)	BLOWS/6" N-VALUE	UNC. STR. (tsf)	MOISTURE (%)	DRY DENSITY (pcf)	LL/PI (%)	ADDITIONAL DATA/ REMARKS
990	***9.75" ASPHALTIC CONCRETE***	***0.6'***		0								
	FAT CLAY *Very stiff to hard, moist, dark brown with red, with weathered shale*				SS 1		10-12-8 N=20		19.1		48/24	
					SS 2		11-21-19 N=40		19.6			
985		***5.7'***		5								
	CHERT	***6.5'***										
	FAT CLAY *Very stiff, moist, red with gray and yellow, with weathered shale*				SS 3		5-9-11 N=20		22.7			
980				10								
		13.0'										
	CHERT	***13.5'***										
	FAT CLAY *Very stiff, moist, red with yellow, with weathered shale and chert*	***15.0'***		15	SS 4		6-17-12 N=29		27.6			

BASE OF BORING AT 15.0 FEET

WATER LEVEL OBSERVATIONS	
WD	▽ Not Encountered
IAD	▼ Not Encountered
AD	▼ Not Performed

OLSSON, INC.
302 E. MILLSAP ROAD
FAYETTEVILLE, ARKANSAS 72703

STARTED:	11/12/19	FINISHED:	11/12/19
DRILL CO.:	OLSSON	DRILL RIG:	CME 45B
DRILLER:	K. KEMPTON	LOGGED BY:	D Martin
METHOD:	CONTINUOUS FLIGHT AUGER		

APPENDIX C
Laboratory Test Results

OLSSON ASSOCIATES
1802 East 123rd Street
Olathe, KS 66061
TEL 913.829.0078
FAX 913.829.0258
www.olssonassociates.com

Moisture - Density Relationship

Project Information	
Project Name:	32nd Street Widening
Project Number:	015-2768
Client Name:	City of Joplin MO
Project Location:	Joplin, MO

Sample Information	
Sample ID/Proctor #:	Proctor No.1
Sample Location:	B11 (-5' to -10')
Date Sampled:	9-Dec-15
Date Tested:	18-Dec-15
Sample Description:	Highly Weathered Shale - Red with gray

Test Method	
Type of Test:	ASTM D-698
Method of Test:	A
Preparation Method:	Moist
Rammer Type:	Mechanical
Specific Gravity:	2.7
Gs Determination:	Estimated

Remarks

N/A

Test Results	
Maximum Dry Density:	101.0 pcf
Optimum Moisture Content:	21.8 %
Liquid Limit:	67
Plastic Limit:	30
Plasticity Index:	37
Classification:	SHALE
Retained on 3/4" (%)	N/A
Retained on 3/8" (%)	N/A
Retained on No.4 (%)	< 5

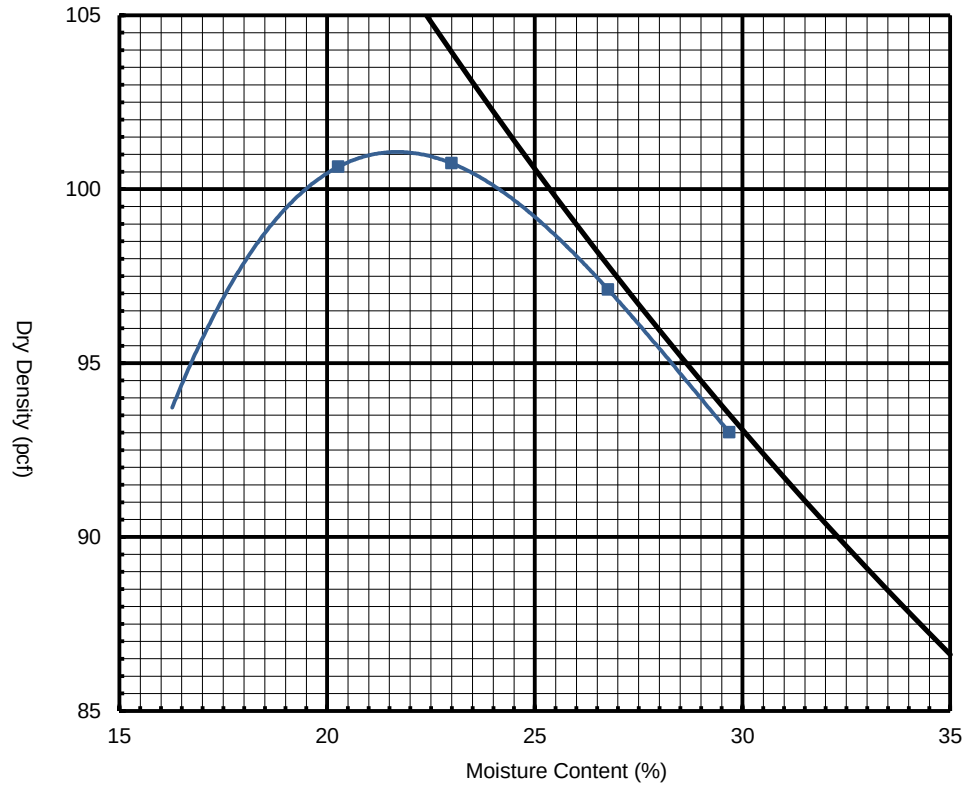

LEGEND

100% Saturation Curve:

Proctor Curve:

Corrected Proctor Curve:

OLSSON ASSOCIATES
1802 East 123rd Street
Olathe, KS 66061
TEL 913.829.0078
FAX 913.829.0258
www.olssonassociates.com

Moisture - Density Relationship

Project Information	
Project Name:	32nd Street Widening
Project Number:	015-2768
Client Name:	City of Joplin MO
Project Location:	Joplin, MO

Sample Information	
Sample ID/Proctor #:	Proctor No.2
Sample Location:	B-7 (-5' to -10')
Date Sampled:	8-Dec-15
Date Tested:	18-Dec-15
Sample Description:	(GC) Clayey Gravel with Sand - Reddish brown, with chert

Test Method	
Type of Test:	ASTM D-698
Method of Test:	B
Preparation Method:	Moist
Rammer Type:	Mechanical
Specific Gravity:	2.7
Gs Determination:	Estimated

Remarks

N/A

Test Results	
Maximum Dry Density:	121.2 pcf
Optimum Moisture Content:	11.5 %
Liquid Limit:	36
Plastic Limit:	18
Plasticity Index:	18
Classification:	GC
Retained on 3/4" (%)	5%
Retained on 3/8" (%)	23%
Retained on No.4 (%)	37%

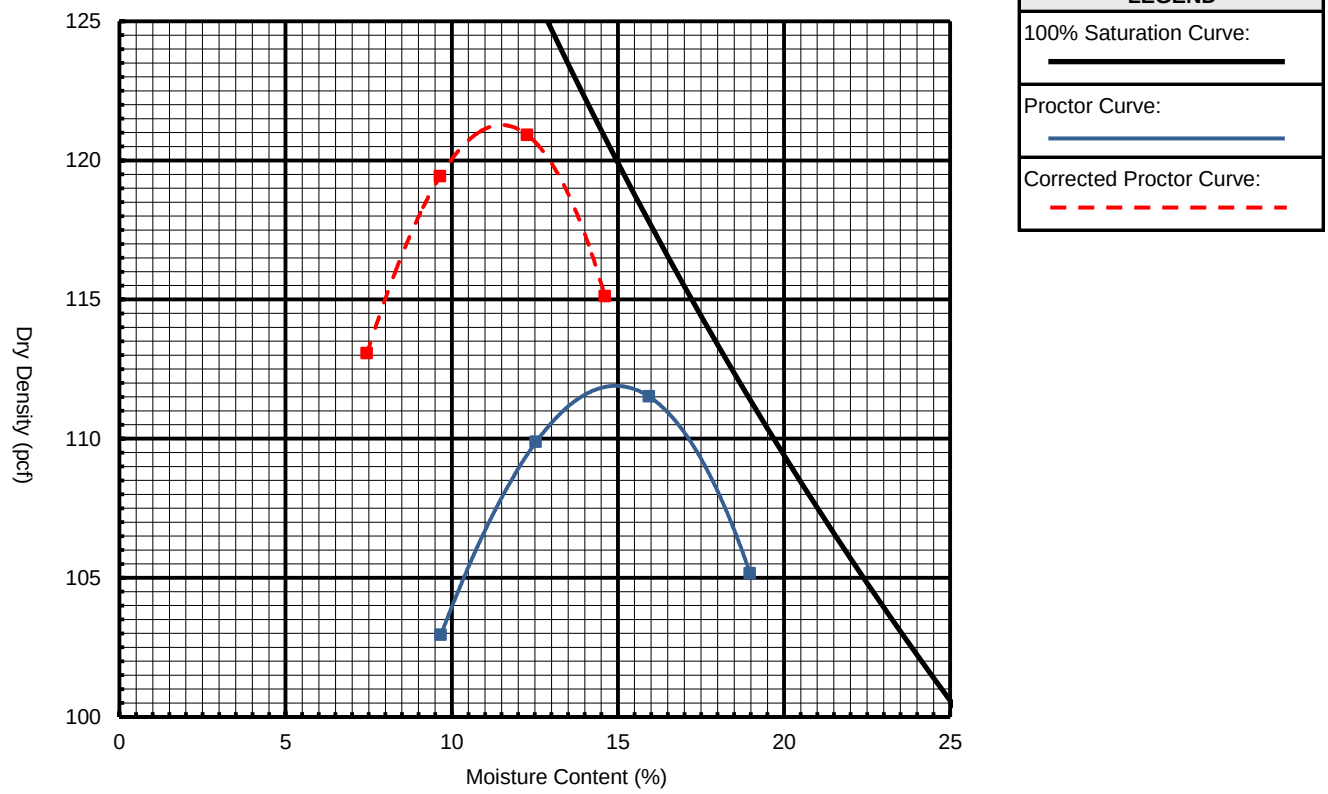

OLSSON ASSOCIATES
1802 E. 123RD STREET
OLATHE, KS 66061

GRAIN SIZE DISTRIBUTION

PROJECT NAME: Joplin 32nd Street Widening from Schifferdecker **CLIENT:** City of Joplin, MO

PROJECT NUMBER: 015-2768 **PROJECT LOCATION:** Joplin, Missouri

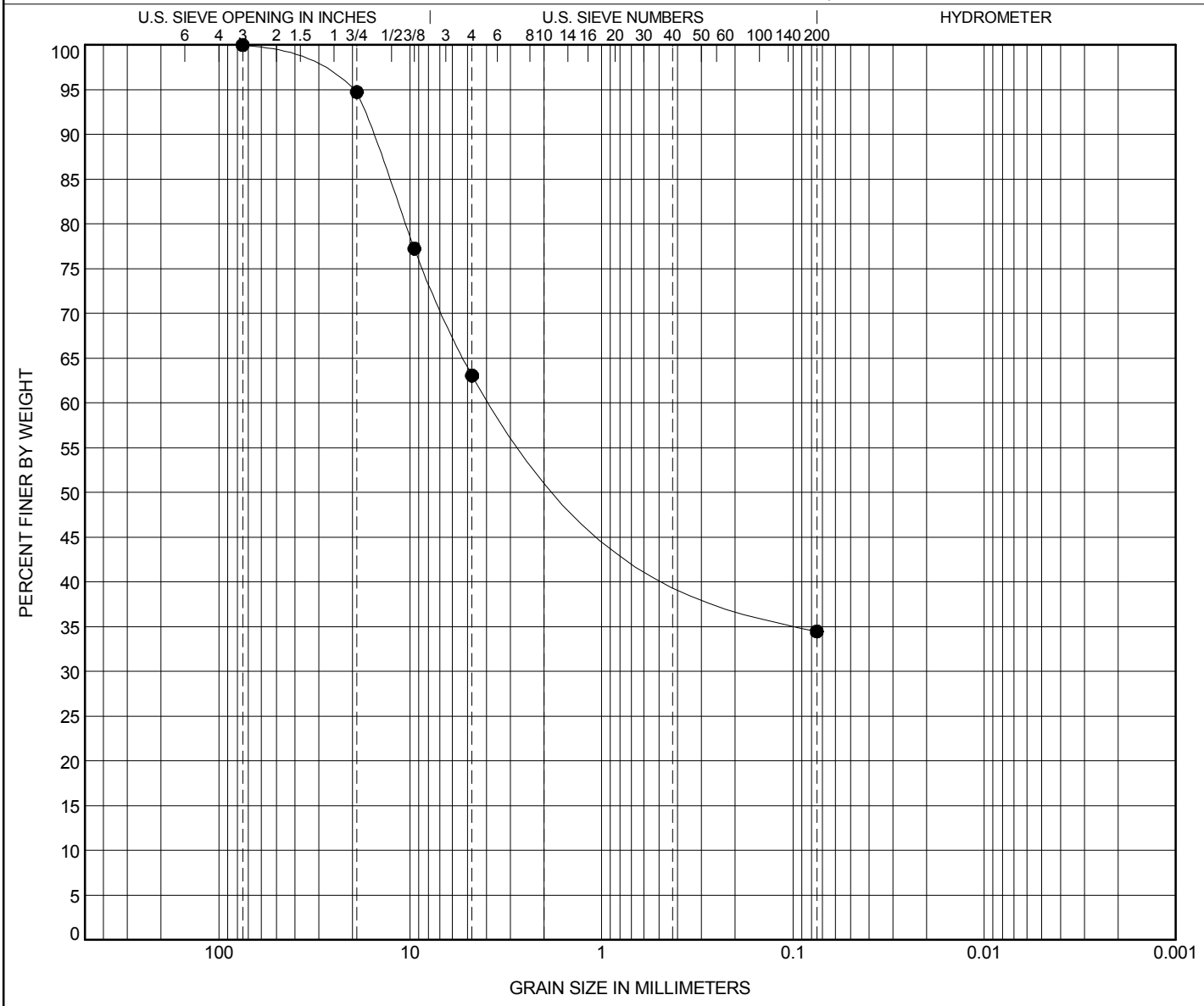

COBBLES	GRAVEL		SAND			SILT OR CLAY
	coarse	fine	coarse	medium	fine	

Boring No.	Sample ID	Depth (ft)	Classification	LL	PL	PI	Cc	Cu
● **B-7**	**GB-**	**5.0 - 10.0'**	**Clayey gravel with sand (GC)**	**36**	**18**	**18**		

Boring No.	Sample ID	D100	D60	D30	D10	%Gravel	%Sand	%Silt	%Clay
● **B-7**	**GB-**	**75**	**3.039**			**36.9**	**28.6**	**34.5**	

OLSSON ASSOCIATES
1802 East 123rd Street
Olathe, KS 66061
TEL 913.829.0078
FAX 913.829.0258
www.olssonassociates.com

California Bearing Ratio (CBR)

Project Information	
Project Name:	Joplin 32nd Street Widening
Project Number:	015-2768
Client Name:	City of Joplin MO
Project Location:	Joplin, MO

Sample Information					
Boring No.:	B-11	**Depth:**	0'-5'	**Test Date:**	1/12/2016
Sample No.:	GB-1	**Elevation:**	N/A	**Tested By:**	DS
Test No.:	1	**Type:**	Bulk	**Checked By:**	CW
Sample Description:	Highly Weathered Shale - Red with gray				

Test Data	
Sample Height (in.):	4.5625
Sample Area (in^2):	28.274
Sample Volume (cc):	2114
Sample Mass (g):	3962.3
Sample Condition:	Soaked
Swell:	3.75%
Surcharge (g):	4540 g
Void Ratio:	0.76
Wet Unit Weight (pcf):	117.0
Dry Unit Weight (pcf):	96.0

California Bearing Ratio					
at 0.1 in:	1	**at 0.3 in:**	1	**at 0.5 in:**	1
at 0.2 in:	1	**at 0.4 in:**	1		

Water Content	Before	Top	Average
Tare ID	G41	P25	P34
Tare Mass, gm	6.9	1.56	1.57
Mas Tare + Wet Soil, gm	255.10	87.15	70.19
Mass Tare + Dry Soil, gm	210.60	63.45	55.01
Water Content, %	21.9	36.3	28.4

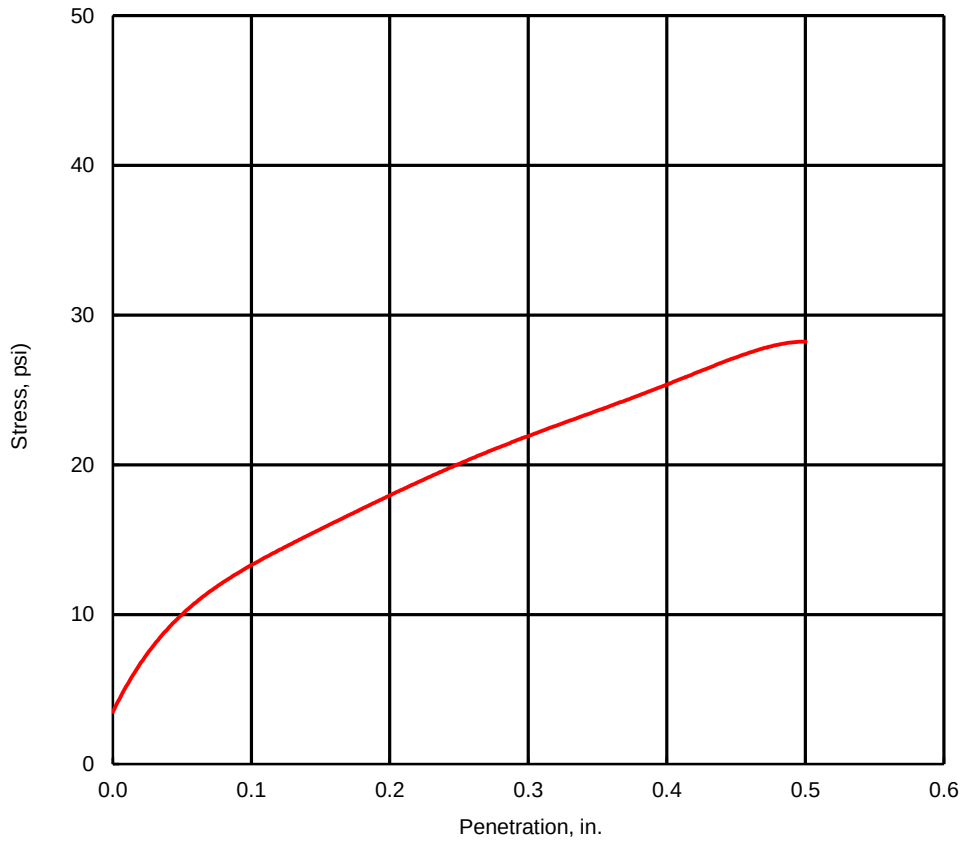

OLSSON ASSOCIATES
1802 East 123rd Street
Olathe, KS 66061
TEL 913.829.0078
FAX 913.829.0258
www.olssonassociates.com

California Bearing Ratio (CBR)

Project Information	
Project Name:	Joplin 32nd Street Widening
Project Number:	015-2768
Client Name:	City of Joplin MO
Project Location:	Joplin, MO

Sample Information					
Boring No.:	B-11	**Depth:**	0'-5'	**Test Date:**	1/12/2016
Sample No.:	GB-1	**Elevation:**	N/A	**Tested By:**	DS
Test No.:	2	**Type:**	Bulk	**Checked By:**	CW
Sample Description:	Highly Weathered Shale - Red with gray				

Test Data	
Sample Height (in.):	4.5625
Sample Area (in^2):	28.274
Sample Volume (cc):	2114
Sample Mass (g):	4029.9
Sample Condition:	Soaked
Swell:	3.70%
Surcharge (g):	4540 g
Void Ratio:	0.75
Wet Unit Weight (pcf):	119.0
Dry Unit Weight (pcf):	96.2

California Bearing Ratio					
at 0.1 in:	1	**at 0.3 in:**	1	**at 0.5 in:**	1
at 0.2 in:	1	**at 0.4 in:**	1		

Water Content	Before	Top	Average
Tare ID	G203	W14	P25
Tare Mass, gm	6.7	1.61	1.61
Mas Tare + Wet Soil, gm	278.90	71.73	98.67
Mass Tare + Dry Soil, gm	226.70	51.61	76.92
Water Content, %	23.7	40.2	28.9

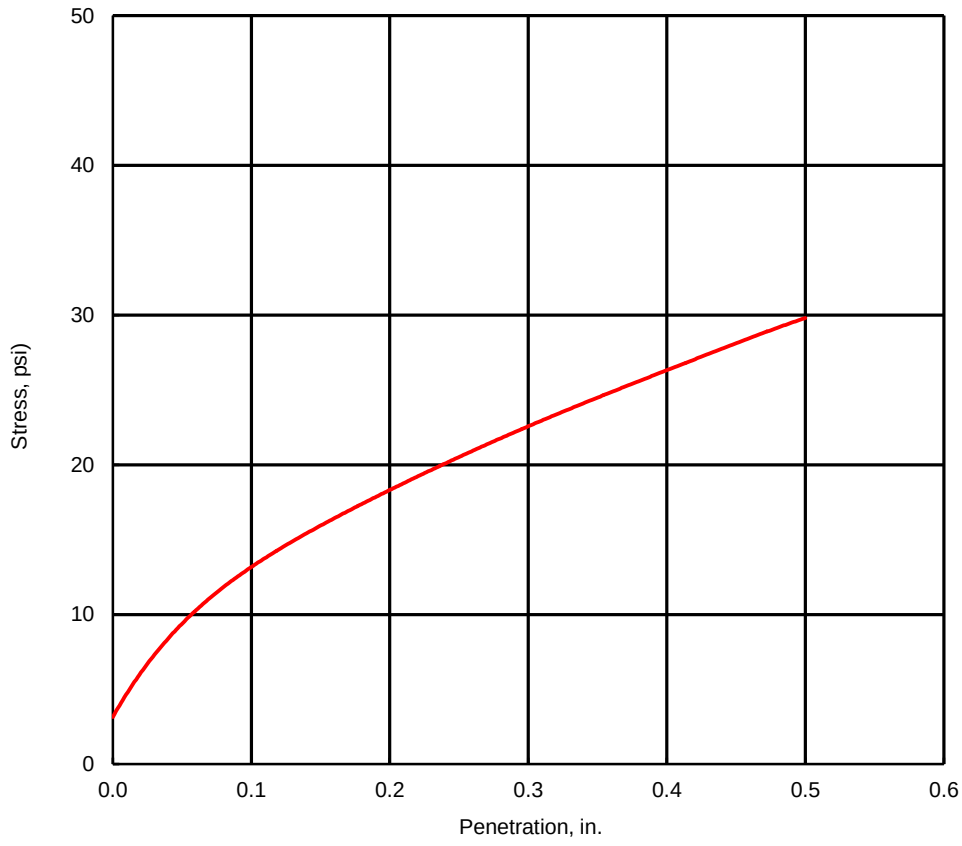

OLSSON ASSOCIATES
1802 East 123rd Street
Olathe, KS 66061
TEL 913.829.0078
FAX 913.829.0258
www.olssonassociates.com

California Bearing Ratio (CBR)

Project Information					
Project Name:	Joplin 32nd Street Widening				
Project Number:	015-2768				
Client Name:	City of Joplin MO				
Project Location:	Joplin, MO				
Sample Information					
Boring No.:	B-11	**Depth:**	0'-5'	**Test Date:**	1/12/2016
Sample No.:	GB-1	**Elevation:**	N/A	**Tested By:**	DS
Test No.:	3	**Type:**	Bulk	**Checked By:**	CW
Sample Description:	Highly Weathered Shale - Red with gray				

Test Data	
Sample Height (in.):	4.5625
Sample Area (in^2):	28.274
Sample Volume (cc):	2114
Sample Mass (g):	4079.8
Sample Condition:	Soaked
Swell:	2.17%
Surcharge (g):	4540 g
Void Ratio:	0.76
Wet Unit Weight (pcf):	120.5
Dry Unit Weight (pcf):	95.8

California Bearing Ratio					
at 0.1 in:	1	**at 0.3 in:**	1	**at 0.5 in:**	1
at 0.2 in:	1	**at 0.4 in:**	1		

Water Content	Before	Top	Average
Tare ID	G103	W30	P30
Tare Mass, gm	6.8	1.57	1.57
Mas Tare + Wet Soil, gm	293.70	72.31	117.01
Mass Tare + Dry Soil, gm	234.90	51.72	89.95
Water Content, %	25.8	41.1	30.6

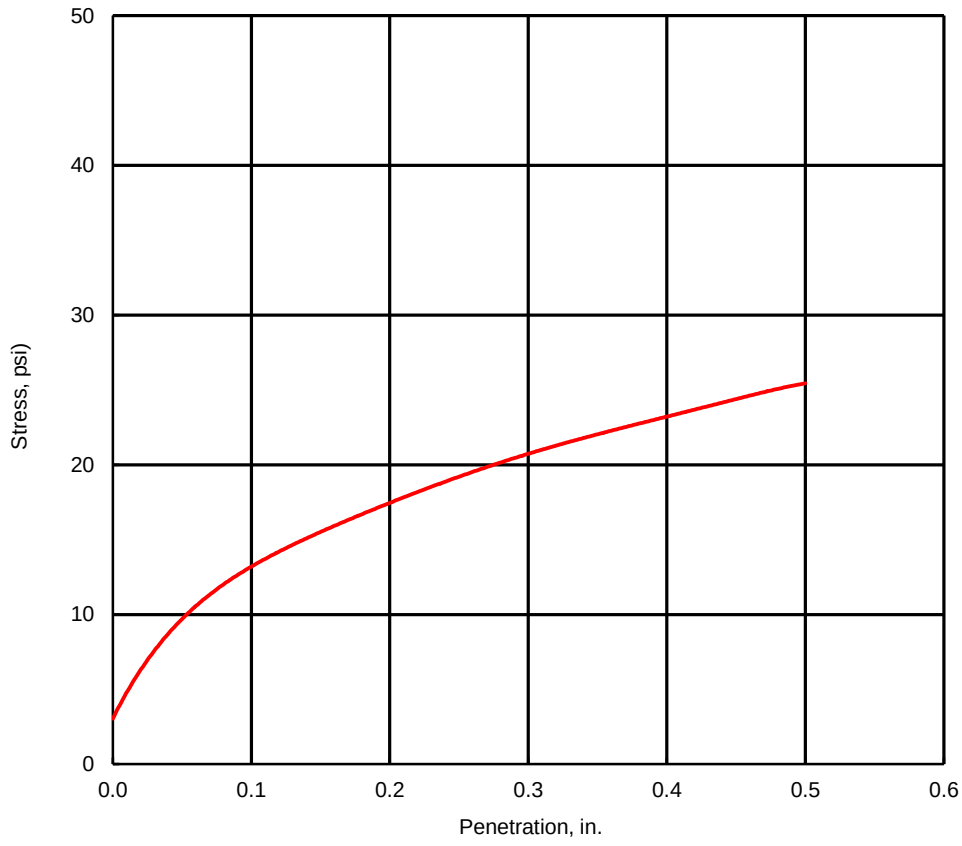

OLSSON ASSOCIATES
1802 East 123rd Street
Olathe, KS 66061
TEL 913.829.0078
FAX 913.829.0258
www.olssonassociates.com

California Bearing Ratio (CBR)

Project Information	
Project Name:	Joplin 32nd Street Widening
Project Number:	015-2768
Client Name:	City of Joplin MO
Project Location:	Joplin, MO

Sample Information					
Boring No.:	B-7	**Depth:**	0'-5'	**Test Date:**	1/18/2015
Sample No.:	GB-1	**Elevation:**	N/A	**Tested By:**	DS
Test No.:	1	**Type:**	Bulk	**Checked By:**	CW
Sample Description:	(GC) Clayey Gravel with Sand - Reddish brown, with chert				

Test Data	
Sample Height (in.):	4.5625
Sample Area (in^2):	28.274
Sample Volume (cc):	2114
Sample Mass (g):	4262.2
Sample Condition:	Soaked
Swell:	0.33%
Surcharge (g):	4540 g
Void Ratio:	0.45
Wet Unit Weight (pcf):	125.9
Dry Unit Weight (pcf):	116.2

California Bearing Ratio					
at 0.1 in:	2	**at 0.3 in:**	2	**at 0.5 in:**	2
at 0.2 in:	2	**at 0.4 in:**	2		

Water Content	Before	Top	Average
Tare ID	G44	W30	P31
Tare Mass, gm	6.9	1.59	1.56
Mas Tare + Wet Soil, gm	237.40	111.55	253.79
Mass Tare + Dry Soil, gm	219.70	93.74	222.57
Water Content, %	8.3	19.3	14.1

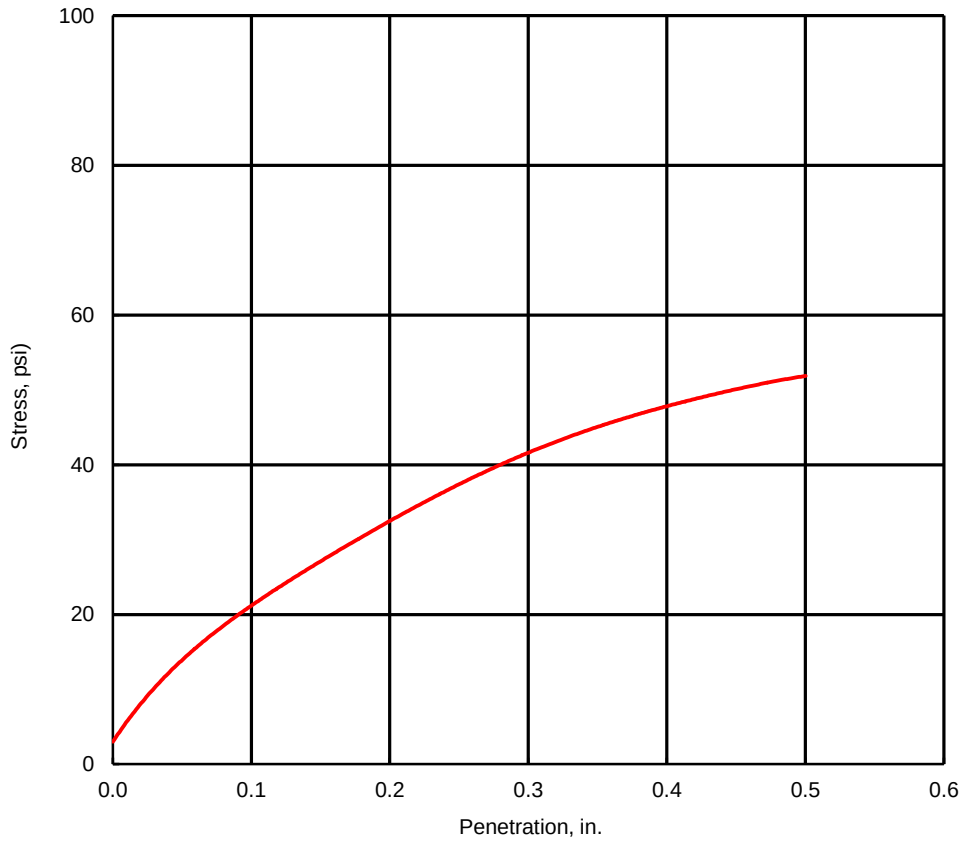

OLSSON ASSOCIATES
1802 East 123rd Street
Olathe, KS 66061
TEL 913.829.0078
FAX 913.829.0258
www.olssonassociates.com

California Bearing Ratio (CBR)

Project Information	
Project Name:	Joplin 32nd Street Widening
Project Number:	015-2768
Client Name:	City of Joplin MO
Project Location:	Joplin, MO

Sample Information					
Boring No.:	B-7	**Depth:**	0'-5'	**Test Date:**	1/18/2015
Sample No.:	GB-1	**Elevation:**	N/A	**Tested By:**	DS
Test No.:	2	**Type:**	Bulk	**Checked By:**	CW
Sample Description:	(GC) Clayey Gravel with Sand - Reddish brown, with chert				

Test Data	
Sample Height (in.):	4.5625
Sample Area (in^2):	28.274
Sample Volume (cc):	2114
Sample Mass (g):	4508.5
Sample Condition:	Soaked
Swell:	0.31%
Surcharge (g):	4540 g
Void Ratio:	0.43
Wet Unit Weight (pcf):	133.1
Dry Unit Weight (pcf):	117.9

California Bearing Ratio					
at 0.1 in:	3	**at 0.3 in:**	4	**at 0.5 in:**	5
at 0.2 in:	4	**at 0.4 in:**	4		

Water Content	Before	Top	Average
Tare ID	G203	P15	P36
Tare Mass, gm	7.2	1.64	1.54
Mas Tare + Wet Soil, gm	242.80	112.19	207.35
Mass Tare + Dry Soil, gm	215.90	96.16	181.46
Water Content, %	12.9	17.0	14.4

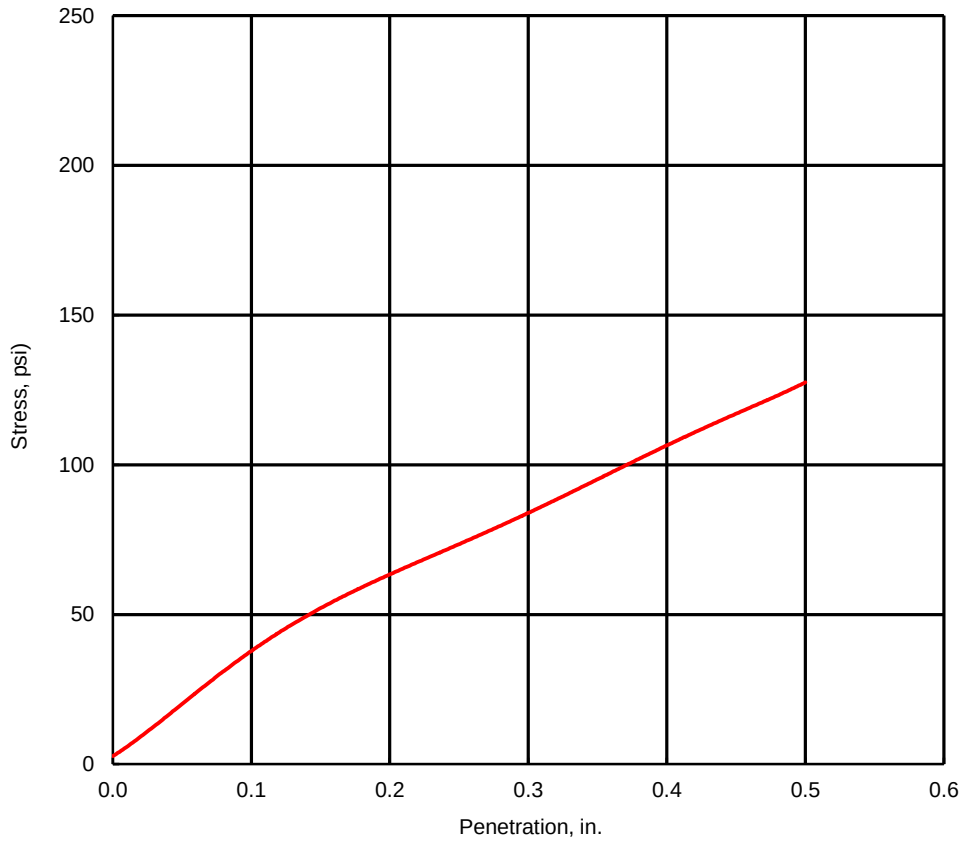

OLSSON ASSOCIATES
1802 East 123rd Street
Olathe, KS 66061
TEL 913.829.0078
FAX 913.829.0258
www.olssonassociates.com

California Bearing Ratio (CBR)

Project Information	
Project Name:	Joplin 32nd Street Widening
Project Number:	015-2768
Client Name:	City of Joplin MO
Project Location:	Joplin, MO

Sample Information					
Boring No.:	B-7	**Depth:**	0'-5'	**Test Date:**	1/18/2015
Sample No.:	GB-1	**Elevation:**	N/A	**Tested By:**	DS
Test No.:	2	**Type:**	Bulk	**Checked By:**	CW
Sample Description:	(GC) Clayey Gravel with Sand - Reddish brown, with chert				

Test Data	
Sample Height (in.):	4.5625
Sample Area (in^2):	28.274
Sample Volume (cc):	2114
Sample Mass (g):	4514.7
Sample Condition:	Soaked
Swell:	1.21%
Surcharge (g):	4540
Void Ratio:	0.45
Wet Unit Weight (pcf):	133.3
Dry Unit Weight (pcf):	115.9

California Bearing Ratio					
at 0.1 in:	7	**at 0.3 in:**	6	**at 0.5 in:**	5
at 0.2 in:	6	**at 0.4 in:**	6		

Water Content	Before	Top	Average
Tare ID	G203	P15	P36
Tare Mass, gm	7.2	1.64	1.54
Mas Tare + Wet Soil, gm	242.80	112.19	207.35
Mass Tare + Dry Soil, gm	215.90	96.16	181.46
Water Content, %	12.9	17.0	14.4

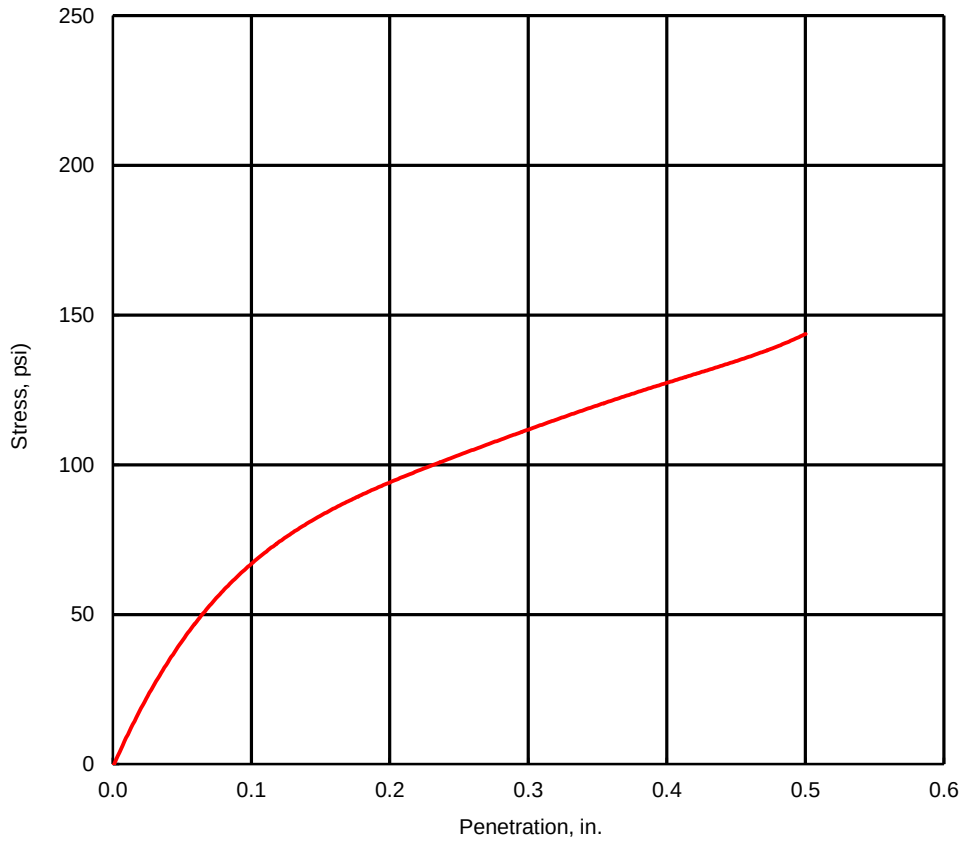

APPENDIX D:

USACE PERMIT SWL-2021-00069

DEPARTMENT OF THE ARMY
LITTLE ROCK DISTRICT, CORPS OF ENGINEERS
POST OFFICE BOX 867
LITTLE ROCK, ARKANSAS 72203-0867
www.swl.usace.army.mil

March 18, 2021

Regulatory Division

NATIONWIDE PERMIT NO. **SWL-2021-00069**

Mr. Dan Johnson
City of Joplin
602 S. Main Street
Joplin, MO 64801

Dear Mr. Johnson:

Please refer to your application dated February 10, 2021, on behalf of City of Joplin, concerning Department of the Army permit requirements pursuant to Section 404 of the Clean Water Act (33 U.S. Code 1344). You requested authorization for work, including the placement of dredged and fill material, in waters of the United States associated with widening of 32nd Street. The proposed project would impact approximately 240 linear feet of an intermittent channel resulting from culvert extension (including downstream channel armoring) and impact approximately 0.03 acres of forested wetlands at the location of the culvert extension. A second crossing location will consist of a culvert replacement impacting approximately 75 linear feet of intermittent channel. The project is located in unnamed intermittent tributaries to Shoal Creek, in parts of sections 17, 18, 19, and 20, T. 27 N., R. 33 W., Joplin, Newton and Jasper counties, Missouri.

The proposed activities are authorized by Department of the Army Nationwide Permit (NWP) No. **14** (copy enclosed), provided that the conditions therein, and the following added special condition, are met. You should become familiar with the conditions and maintain a copy of the permit at the worksite for ready reference. If changes are proposed in the design or location of the facilities, you should submit revised plans to this office for approval before construction of the change begins.

Section 401 water quality certification has been issued with conditions for the referenced NWP by the Missouri Department of Natural Resources, Water Protection Program (copy enclosed). In addition to the specific criteria and conditions of the NWP, you must comply with the conditions specified in the certification as special conditions to this permit.

Special Condition:

The clearing of suitable habitat trees and/or snags (typically greater than 3 inches in diameter at breast height that have exfoliating bark, cracks, crevices, and/or hollows) associated with this project must be conducted between October 15th and April 1st to avoid

impacts to threatened or endangered bats identified in the Endangered Species Act Section 7 review of the proposed project area. Alternatively, a professional biologist can perform a habitat assessment to ensure that no threatened or endangered bats are present outside of this hibernation period. This assessment must be submitted to the Corps of Engineers Regulatory Division for review, coordination with Federal and state agencies, and approval before tree removal can commence.

Please refer to NWP General Condition No. 12, which stipulates that appropriate erosion and siltation controls be used during construction and all exposed soil be permanently stabilized. Erosion control measures must be implemented during and after construction of the proposed project to comply with this permit condition.

In order to fully comply with the conditions of the NWP, you must submit the enclosed compliance certification within 30 days of completion of the project. This is required pursuant to NWP General Condition No. 30 of the permit.

This permit action is based upon a Corps of Engineers determination that the subject work is within the jurisdiction of the Department of the Army regulatory program, but does not address nor include any consideration for geographic jurisdiction on aquatic resources and shall not be interpreted as such. You may contact the Little Rock District Regulatory Division if you wish to discuss your options for appealing this determination.

The NWP determination will be valid until March 18, 2022. If NWP No. **14** is modified, suspended, or revoked during this period, your project may not be authorized unless you have begun or are under contract to begin the project. If work has started or the work is under contract, you would then have twelve (12) months to complete the work.

The authorization of this work by a NWP does not relieve you of complying with other applicable local, state, and Federal laws, nor does it grant any property rights or exclusive privileges.

If you have any questions about this permit or any of its provisions, please contact me at (501) 340-1386 and refer to Permit No. **SWL-2021-00069**.

Please submit your comments or suggestions on our Customer Service Survey: http://corpsmapu.usace.army.mil/cm_apex/f?p=regulatory_survey.

Sincerely,

David Rupe
Project Manager

Enclosures

cc:
US Environmental Protection Agency, Region 7, Gabriel Dupree
Missouri Department of Natural Resources, Mike Irwin
Missouri Department of Conservation, Audrey Beres
Proj Mgr, Beaver Lake PO
Ch, Regulatory Enf
Jack Finley, Olsson

PERMITTEE COMPLIANCE CERTIFICATION

PERMIT NO.: SWL-2021-00069 **NWP/S NO.:** 14

PERMITTEE NAME: City of Joplin

DATE OF ISSUANCE: March 18, 2021

PROJECT MANAGER: David Rupe

Upon completion of the activity authorized by this permit and any mitigation required by the permit, sign this certification and return it to the following address:

US Army Corps of Engineers, Little Rock
ATTENTION: CESWL-RD
PO Box 867
Little Rock, Arkansas 72203-0867

Please note that your permitted activity is subject to a compliance inspection by a US Army Corps of Engineers representative. If you fail to comply with this permit, you are subject to permit suspension, modification, or revocation.

I hereby certify that the work authorized by the above referenced permit has been completed in accordance with the terms and conditions of the said permit, and required mitigation was completed in accordance with the permit conditions.

DATE WORK COMPLETED: _____

_____ _____

SIGNATURE OF PERMITTEE **DATE**

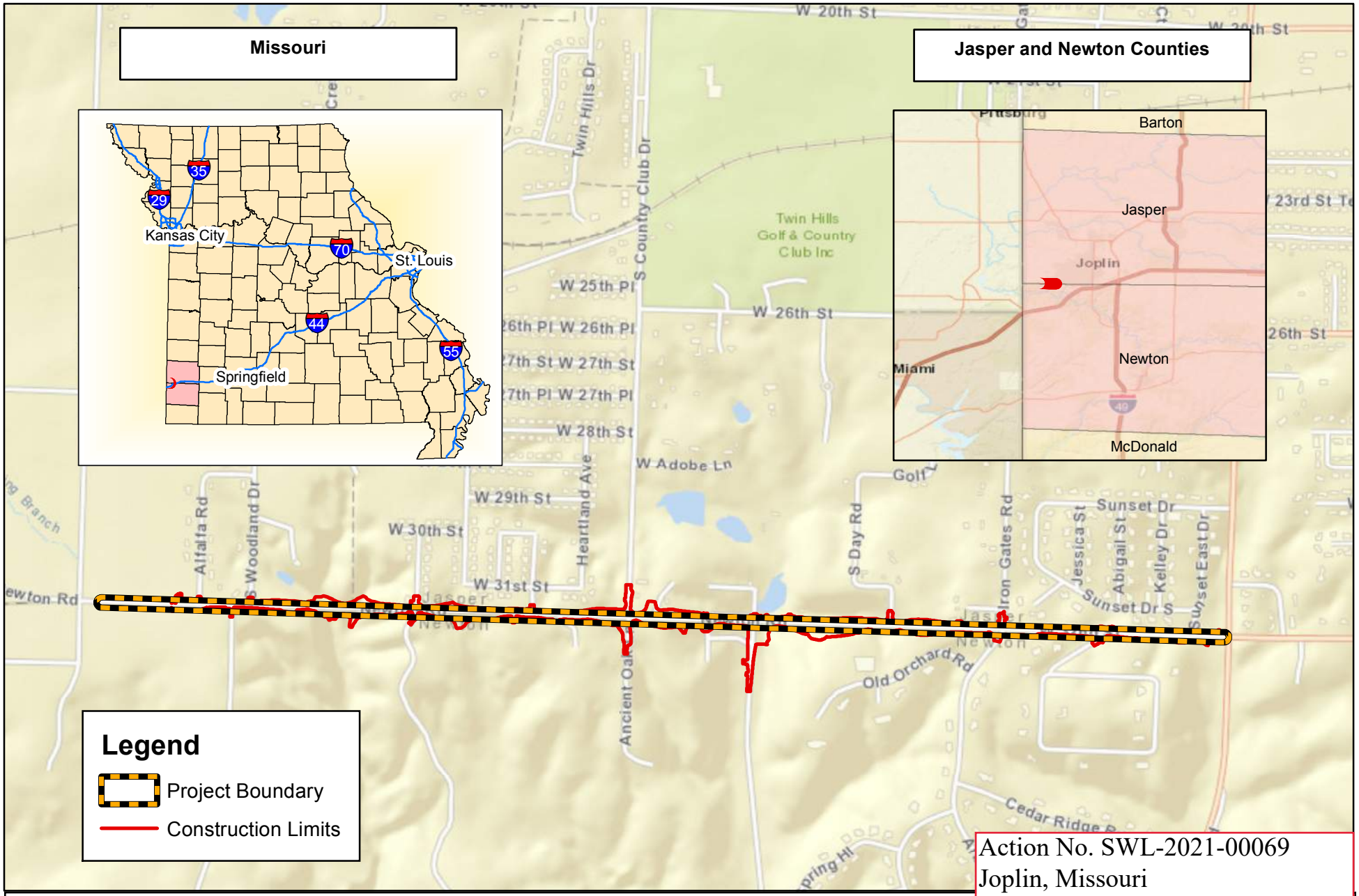

Project Number: 015-2768 *Drawn By: KK/JF* *Revision Date: 2/5/2021*	**Location Map** Joplin 32nd Street Widening Central City Rd. to Schifferdecker Ave. Joplin, Missouri	DISCLAIMER : This Geographic Information System (GIS) and its components are designed as a source of reference for answering inquiries, for planning and for modeling. GIS is not intended, nor does it replace legal description information in the chain of title and other information contained in official government records such as the County Clerk and Recorders office or the courts. In addition, the representations of locations in this GIS cannot be substituted for actual legal surveys.	olsso

Action No. SWL-2021-00069
Joplin, Missouri
32nd Street Widening Project
Sections 17, 18, 19, and 20,
T. 27 N., R. 33 W.
March 2021 Page 1 of 7

\\oa.ad.oaconsulting.com\lte-ns1\projects\PROJECTS\015-2768\40-Design\GIS\Figure1_Location_Missouri.mxd



N

0

Project Number: 015-2768	**Aerial Map** Joplin 32nd Street Widening Center City Rd. to Schifferdecker Ave. Joplin, Missouri	DISCLAIMER : This Geographic Information System (GIS) and its components are designed as a source of reference for answering inquiries, for planning and for modeling. GIS is not intended, nor does it replace legal description information in the chain of title and other information contained in official government records such as the County Clerk and Recorders office or the courts. In addition, the representations of locations in this GIS cannot be substituted for actual legal surveys.	olsson
Drawn By: KK/JF			
Revision Date: 2/5/2021			

Action No. SWL-2021-00069
Joplin, Missouri
32nd Street Widening Project
Sections 17, 18, 19, and 20,
T. 27 N., R. 33 W.
March 2021 Page 2 of 7

\\oa.ad.oaconsulting.com\lte-ns1\projects\PROJECTS\015-2768\40-Design\GIS\Ex3_Aerial_Missouri.mxd



Project Number: 015-2768 *Drawn By: KK/JF* *Revision Date: 2/5/2021*	**Delineated Aquatic Resources Map** Center City Rd. to Schifferdecker Ave. Joplin, Missouri	DISCLAIMER : This Geographic Information System (GIS) and its components are designed as a source of reference for answering inquiries, for planning and for modeling. GIS is not intended, nor does it replace legal description information in the chain of title and other information contained in official government records such as the County Clerk and Recorders office or the courts. In addition, the representations of locations in this GIS cannot be substituted for actual legal surveys.	olsson

Action No. SWL-2021-00069
Joplin, Missouri
32nd Street Widening Project
Sections 17, 18, 19, and 20,
T. 27 N., R. 33 W.
March 2021 Page 3 of 7

\\oa.ad.oaconsulting.com\lte-ns1\projects\PROJECTS\015-2768\40-Design\GIS\Fig_4_PCN_ImpactsV2.mxd

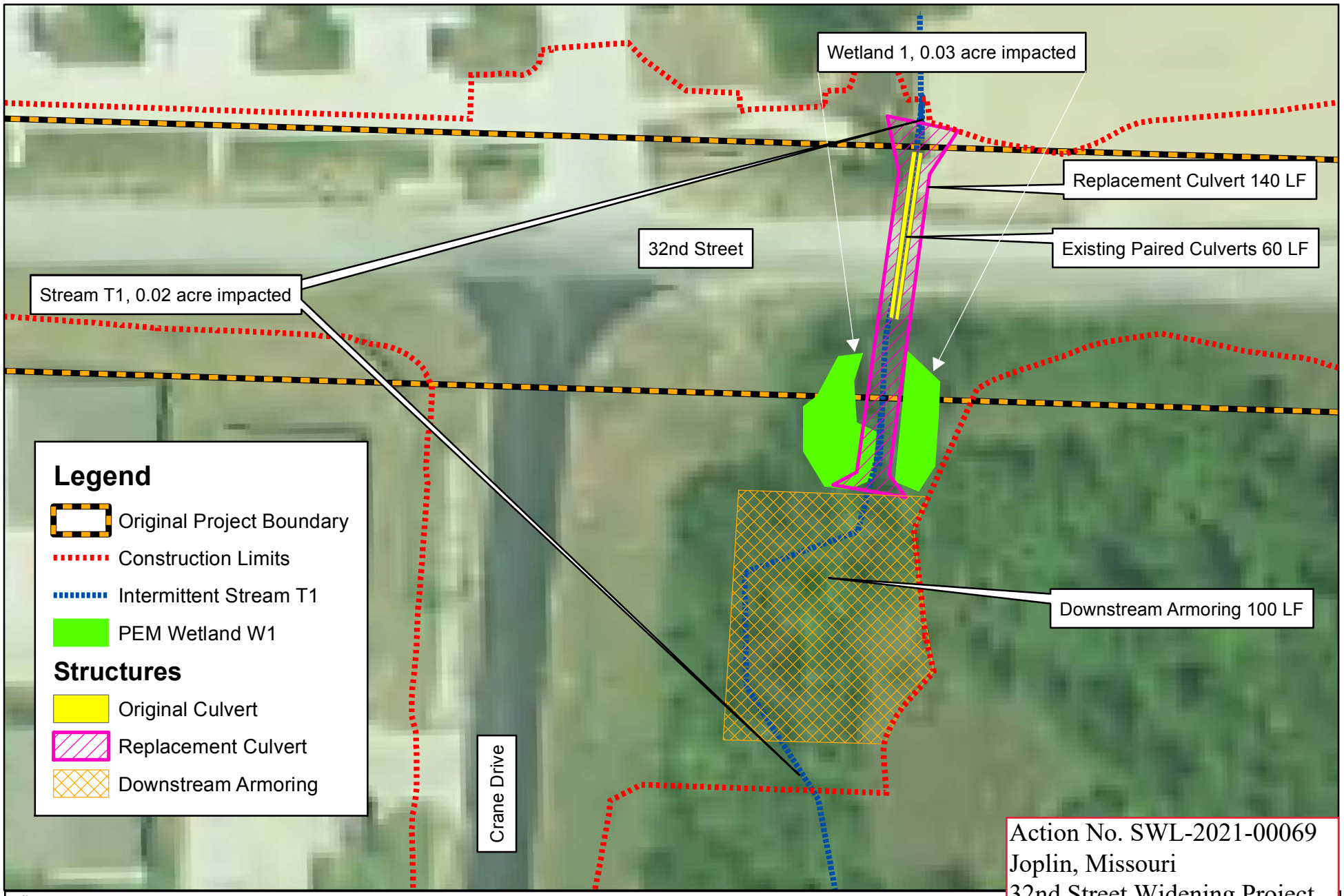

N

0

Project Number: 015-2768 *Drawn By: JF* *Revision Date: 2/5/2021*	**Impacted Aquatic Resources** Stream T1 and Wetland W1 Joplin 32nd Street Widening Central City Rd. to Schifferdecker Ave. Joplin, Missouri	DISCLAIMER : This Geographic Information System (GIS) and its components are designed as a source of reference for answering inquiries, for planning and for modeling. GIS is not intended, nor does it replace legal description information in the chain of title and other information contained in official government records such as the County Clerk and Recorders office or the courts. In addition, the representations of locations in this GIS cannot be substituted for actual legal surveys.	olsson	Action No. SWL-2021-00069 Joplin, Missouri 32nd Street Widening Project Sections 17, 18, 19, and 20, T. 27 N., R. 33 W. March 2021 Page 4 of 7

\\oa.ad.oaconsulting.com\lte-ns1\projects\PROJECTS\015-2768\40-Design\GIS\Fig5A_02-03-2021_Final.mxd

Service Layer Credits: NAIP

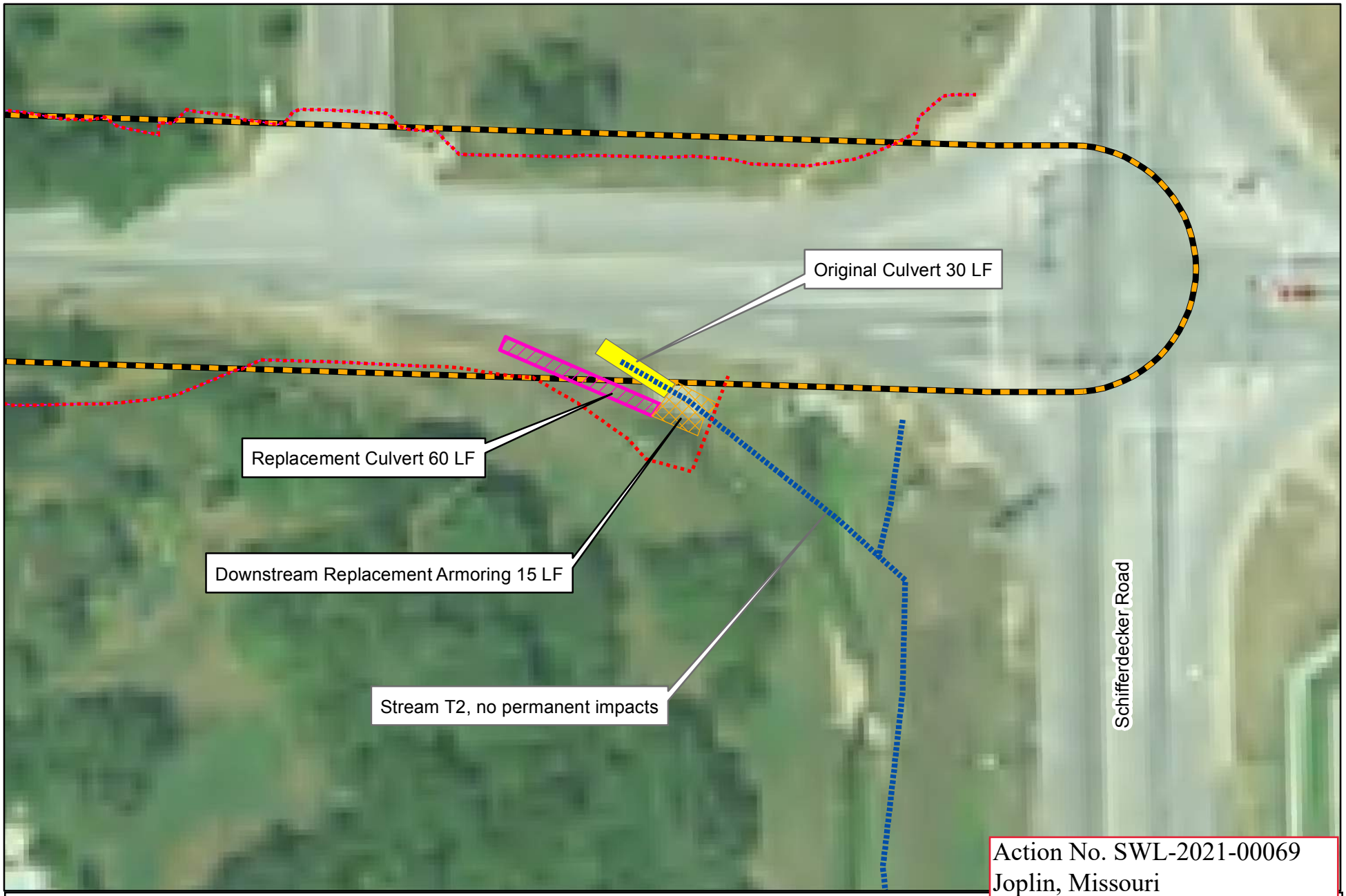

Project Number: 015-2768 *Drawn By: JF* *Revision Date: 2/5/2021*	**Non-Impacted Aquatic Resources** Stream T2 Joplin 32nd Street Widening Central City Rd. to Schifferdecker Ave. Joplin, Missouri	DISCLAIMER : This Geographic Information System (GIS) and its components are designed as a source of reference for answering inquiries, for planning and for modeling. GIS is not intended, nor does it replace legal description information in the chain of title and other information contained in official government records such as the County Clerk and Recorders office or the courts. In addition, the representations of locations in this GIS cannot be substituted for actual legal surveys.	olssor

Action No. SWL-2021-00069
Joplin, Missouri
32nd Street Widening Project
Sections 17, 18, 19, and 20,
T. 27 N., R. 33 W.
March 2021 Page 5 of 7

\\oa.ad.oaconsulting.com\lte-ns1\projects\PROJECTS\015-2768\40-Design\GIS\Fig5B_02_03_2021_Final.mxd

2C-04
STA: 76+09.47, 39.50' LT
CONST. 3' X 3' – TYPE A CATCH BASIN

2C-03
STA: 76+89.60, 39.50' LT
CONST. 3' X 3' – TYPE A CATCH BASIN

2C-02
STA: 77+60.42, 39.50' LT
CONST. 3' X 3' – TYPE A CATCH BASIN

2C-01
STA: 78+49.23, 39.50' LT
CONST. 3' X 3' – TYPE A CATCH BASIN

2-03
STA: 76+00.00, 26.50' LT
CONST. 7' X 4' – TYPE C INLET

2-02
STA: 78+00.00, 26.50' LT
CONST. 7' X 4' – TYPE C INLET

2-01
STA: 78+49.23, 26.50' LT
CONST. 4' X 4' – JUNCTION BOX

1-02
STA: 79+94.52, 53.38' LT
CONST. DOUBLE 108" X 48" FES

PARCEL 31
WATERVIEW ESTATES
3110 S CATNIP LANE
BOOK 2,494, PAGE 215

℄ CATNIP LANE

CATNIP LANE

PI: 48+57.12

RETAINING WALL SEE SHEET B68 FOR DETAIL

2'-6" CONCRETE CATCH CURB & GUTTER (TYP. NORTH SIDE OF ROAD)

STORM LINE 2 SEE SHEET B59–B62 FOR DETAIL

PROPOSED TEMPORARY CONSTRUCTION EASEMENT

LIMITS OF DISTURBANCE

PROPOSED RIGHT–OF–WAY

EXISTING RIGHT–OF–WAY

STORM LINE 2C SEE SHEET B63 FOR DETAIL

10' WIDE CONCRETE SIDEWALK TRAIL

+65.98 59.65' LT
+76.82 71.33' LT
+50.84 59.42' LT
+50.85 45.47' LT
+25 34.50' LT
+35 30.50' LT
+72.82 37.97' LT
+78.83 32.01' LT
+06.68 74.56' LT
+07.26 61.75' LT
+07.49 59.36' LT
+12.88 55.02' LT
+46.61 57.89' LT
+18.05 49.44' LT
+14.37 41.59' LT
+47.12 51.91' LT
+47.16 24.50' LT
+75.50 21.24' RT

R17.00'
R40.00'
R6.00'
R5.00'
R5.00'
R40.00'
R17.00'

22.00'
11.00'
38.00' B–B

℄ 32ND STREET
32ND STREET

6' WIDE CONCRETE SIDEWALK TRAIL

STA: 78+73.96 ℄ 32ND STREET
STA: 50+00 ℄ CRANE DRIVE

90°0'0"

MATCH LINE 75+00 - SEE SHEET B29

MATCH LINE 80+00 - SEE SHEET B33

INSTALL 5 S.Y. OF MODOT TYPE 3 RIPRAP

2'-6" CONCRETE SPILL CURB & GUTTER (TYP. SOUTH SIDE OF ROAD)

+20.46 13.50' RT
+27.46 13.50' RT
+05.14 13.50' RT
+53.50 13.50' RT
+75.50 13.50' RT
+53.50 13.50' LT
+77.18 13.50' LT
+82.16 18.13' LT
+89.24 18.87' LT
+94.22 13.50' LT
+85.32 61.04' LT

R40.00'
R5.00'
R5.00'
R5.00'

STORM LINE 1 SEE SHEET B58 FOR DETAIL
STA: 78+93.09 ℄ 32ND STREET
STA: 50+00 ℄ CATNIP LANE

EXISTING RIGHT–OF–WAY
PROPOSED RIGHT–OF–WAY
LIMITS OF DISTURBANCE
PROPOSED TEMPORARY CONSTRUCTION EASEMENT

PROPOSED PERMANENT SLOPE EASEMENT

PI: 50+99.95

51+00 CRANE DRIVE

℄ CRANE DRIVE

PARCEL 36
SOUTHERN TRAILS ESTATES LLC
P.O. BOX 2283
BOOK 358, PAGE 1,245

PARCEL 37
EDWARD & ALISON HERSHEWE
431 VIRGINIA
BOOK 354, PAGE 4,486 & 4,

1-01
STA: 79+83.11, 87.36' RT
CONST. DOUBLE 108" X 48" F

PROPOSED PE
DRAINAGE E

LEGEND

- ASPHALT PAVEMENT
- CONCRETE SIDEWALK
- CONCRETE DRIVE
- AGGREGATE SURFACE
- ASPHALT OVERLAY
- STAMPED CONCRETE PAVEMENT
- DETECTABLE WARNING SURFACE
- CURB RAMP
- ROCK BLANKET
- PROPOSED RIGHT–OF–WAY
- TEMPORARY CONSTRUCTION EASEMENT LINE
- PERMANENT SLOPE EASEMENT LINE
- LIMITS OF DISTURBANCE

Prepared by:
CJW
CJW Transportation Consultants, L.L.C.
CJW Transportation Consultants, L.L.C. Engineering MO C.A. #2006012385
5051 S National Ave. Suite 7A Springfield, MO 65810
Tel: 417.889.3400 Fax: 417.889.3402 www.GoCJW.com

PRELIMINARY
NOT FOR CONSTRUCTION

REV. NO.	DATE	REVISIONS DESCRIPTION	BY

REVISIONS

PLAN - 32ND STREET
75+00 TO 80+00

32ND STREET WIDENING
CITY OF JOPLIN

2020

Action No. SWL-2021-00069
Joplin, Missouri
32nd Street Widening Project
Sections 17, 18, 19, and 20,
T. 27 N., R. 33 W.
March 2021

DWG: G:\15065 – 32nd Street Roadway\015-2768 32nd Street Widening\40-Design\AutoCAD\Final Plans\Sheets\CJW\B31 & 32 PLAN & PROFILE – 32ND STREET 75+00 TO 80+00.dwg USER: Aaron
DATE: Sep 14, 2020 5:25pm XREFS: CJW_T_CTBLK_015-2768 (2019) CJW_T_PPATT_015-2768 – 3 lane phtch-legend COLOR UTILITIES
V_XBOU_52768 OA_ACAD-T_XBASE_52768 CJW_T_pbase_015-2768 – 3 lane

PARCEL 48
ANTHONY & KAMAN DOLL
3202 W. SUNSET DR.
BOOK 2410, PAGE 0043

PARCEL 49
BETTY McELHANEY
3118 W. SUNSET DR.
BOOK 1959, PAGE 0830

PARCEL 50
CHARLES & BARBARA EASLEY
3102 S. SUNSET DR.
BOOK 2240, PAGE 840

PARCEL 51
LOYCO ENTERPRISES
NE. CORNER OF 32ND ST.
& S. SUNSET EAST DR.
BOOK 1361, PAGE 1199

LEGEND
- ASPHALT PAVEMENT
- CONCRETE SIDEWALK
- CONCRETE DRIVE
- AGGREGATE SURFACE
- ASPHALT OVERLAY
- STAMPED CONCRETE PAVEMENT
- DETECTABLE WARNING SURFACE
- CURB RAMP
- ROCK BLANKET

N

0' 10' 20' 40'
SCALE IN FEET

A4
STA. 114+57.21, 31.41' LT.
CONST. 8'x3' TYPE C CURB IINLET

A3
STA. 116+50.00, 31.50' LT.
CONST. 8'x3' TYPE C CURB INLET

C0
STA. 116+73.11, 40.05' LT.
CONST. 4'x4' JUNCTION BOX

C1
STA. 116+73.11, 48.38' LT.
CONST. 4'x4' AREA INLET
OPENS W

INSET DETAIL
STA. 119+55.61, 69.17' LT.
END TRAIL CONSTRUCTION
MATCH EXISTING SIDEWALK
RECONSTRUCT ADA RAMP

RECONSTRUCT PRIVACY FENCE AS SHOWN.
MATCH LINE 113+50
PROP. TCE
RECONSTRUCT PRIVACY FENCE AS SHOWN.
FIBER-OPTIC TO BE RELOCATED BY UTILITY CO.
GRADING LIMITS
PROP. TCE
PROP. R/W
GUY POLE & GUY WIRE ANCHORS TO BE RELOCATED BY UTILITY CO.
DND EXISTING FENCE
UTILITY EASMENT (TYP.)
BACK YARDS TO DRAIN TO THIS AREA INLET
10' WIDE CONC. SIDEWALK TRAIL
PROP. R/W
STA. 49+44.75
END CONSTRUCTION
MATCH EXISTING
SUNSET DRIVE
49+00
48+59
BP: 48+59.00
+44.78
15.50' RT.
26'
+44.74
15.92' LT.
STA. 117+05.63, BEGIN 2" DEPTH OVERLAY WITH VARIABLE WIDTH PAVEMENT WIDENING TO THE SOUTH.
NO MH. RIM ADJUSTMENT REQUIRED
EX. RIM 973.52
STA. 118+60.74, END PROJECT MATCH EXISTING
10 FT. WIDE CONC. SIDEWALK TRAIL
SEE INSET DETAIL ABOVE FOR CONTINUATION OF TRAIL CONSTRUCTION
EXIST. R/W
+76.43
30.00' LT.
R25'
R25'
+57.61
30.00' LT.
EXIST. R/W
EXIST. R/W
EXISTING 24" RCP
32ND STREET
℄ OF 32ND ST.
114+00
115+00
116+00
117+00
118+00
119+0
27.5'
27.5'
27.5'
27.5'
50+00
BP: 50+08.00
19.8'
72" RCP
STA: 117+16.60 ℄ W. 32ND STREET =
STA: 50+00.00 ℄ SUNSET DRIVE
SET 5.50' SOUTH ℄
PROFILE GRADE OFFSET 5.50' SOUTH ℄
499.92
19.01' RT.
+99.86
29.97' RT.
5.50'
+60.74
30.00' RT.
EXIST. R/W
EXIST. R/W
EXIST. R/W
PROP. R/W
POWER LINE & POLES TO BE RELOCATED BY UTILITY CO.
PROP. TCE
GRADING LIMITS
LOWER MH. RIM 1.10 FT.
EX. RIM 974.06
PR. RIM 972.96
STA. 114+65, 42.50' RT., BEGIN CONSTRUCTION OF CURB FLUME, SEE DETAIL ON SHEET 34.
REGRADE CHANNEL & REINSTALL ROCK BLANKET TO DIRECT CHANNEL INTO CURB OPENING IN BACK OF CURB INLET
STA. 114+48, 42.50' RT., END CONSTRUCTION OF CURB FLUME

PARCEL 60
CHANCE LEE & LORI
MICHA MATTHIESEN
3115 N. WESTBERRY SQ.
BOOK 365, PAGE 8319

PARCEL 60
CHANCE LEE & LORI
MICHAEL MATTHIESEN
3115 N. WESTBERRY SQ.
BOOK 365, PAGE 8319

PARCEL 61
BRUCE & SHAMSINUR SILVERBERG
3303 E. WESTBERRY SQ.
BOOK 356, PAGE 9392

NOTE: FOR STORM DRAIN PROFILES SEE SHEETS C34 & C36.

B1
STA. 114+64.12, 32.01' RT.
CONST. 8'x5' CURB INLET
OPENS N & S

A2
STA. 116+50.00, 31.95' RT.
CONST. 6'x4' TYPE C CURB IINLET

A1
STA. 117+86.00, 31.86' RT.
CONST. 6'x4' TYPE C CURB IINLET

A0
STA. 118+32.35, 56.87' RT.
CONST. 36" Concrete Flared End Section

olsson
Olsson - Civil Engineering
Missouri Certificate of Authority #001592
702 S. Main Street
Joplin, MO 64801
TEL 417.781.0643
www.olsson.com

PRELIMINARY
NOT FOR CONSTRUCTION

REVISIONS
REV. NO. | DATE | REVISIONS DESCRIPTION | BY

ROADWAY PLAN
ND STREET WIDENING
CITY OF JOPLIN
2020

Action No. SWL-2021-00069
Joplin, Missouri
32nd Street Widening Project
Sections 17, 18, 19, and 20,
T. 27 N., R. 33 W.
March 2021 Page 7 of 7

DWG: F:\PROJECTS\015-2768\40-Design\AutoCAD\Final Plans\Sheets TSE\TRNS\TSE_T_RPP_52768.dwg
DATE: Sep 22, 2020 8:00am
XREFS: TSE_T_CTBLK_52768 V_XB0U_52768 TSE_T_PSTRM_BASE_52768 OA_ACAD-T_XBASE_52768 cjw_t_pbase_015-2768 - 3 lane OA_F_PBASE_52768 TSE_T_PBASE_52768 TSE_T_PHTCH_52768
USER: skendall

Nationwide Permit No. 14

Linear Transportation Projects. Activities required for crossings of waters of the United States associated with the construction, expansion, modification, or improvement of linear transportation projects (e.g., roads, highways, railways, trails, airport runways, and taxiways) in waters of the United States. For linear transportation projects in non-tidal waters, the discharge cannot cause the loss of greater than 1/2-acre of waters of the United States. For linear transportation projects in tidal waters, the discharge cannot cause the loss of greater than 1/3-acre of waters of the United States. Any stream channel modification, including bank stabilization, is limited to the minimum necessary to construct or protect the linear transportation project; such modifications must be in the immediate vicinity of the project.

This NWP also authorizes temporary structures, fills, and work, including the use of temporary mats, necessary to construct the linear transportation project. Appropriate measures must be taken to maintain normal downstream flows and minimize flooding to the maximum extent practicable, when temporary structures, work, and discharges, including cofferdams, are necessary for construction activities, access fills, or dewatering of construction sites. Temporary fills must consist of materials, and be placed in a manner, that will not be eroded by expected high flows. Temporary fills must be removed in their entirety and the affected areas returned to pre-construction elevations. The areas affected by temporary fills must be revegetated, as appropriate.

This NWP cannot be used to authorize non-linear features commonly associated with transportation projects, such as vehicle maintenance or storage buildings, parking lots, train stations, or aircraft hangars.

Notification: The permittee must submit a pre-construction notification to the district engineer prior to commencing the activity if: (1) The loss of waters of the United States exceeds 1/10-acre; or (2) there is a discharge in a special aquatic site, including wetlands. (See general condition 32.) (Sections 10 and 404)

Note 1: For linear transportation projects crossing a single waterbody more than one time at separate and distant locations, or multiple waterbodies at separate and distant locations, each crossing is considered a single and complete project for purposes of NWP authorization. Linear transportation projects must comply with 33 CFR 330.6(d).

Note 2: Some discharges for the construction of farm roads or forest roads, or temporary roads for moving mining equipment, may qualify for an exemption under section 404(f) of the Clean Water Act (see 33 CFR 323.4).

Note 3: For NWP 14 activities that require pre-construction notification, the PCN must include any other NWP(s), regional general permit(s), or individual permit(s) used or intended to be used to authorize any part of the proposed project or any related activity, including other separate and distant crossings that require Department of the Army authorization but do not require pre-construction notification (see paragraph (b) of general condition 32). The district engineer will evaluate the PCN in accordance with Section D, "District Engineer's Decision." The district engineer may require mitigation to ensure that the authorized activity results in no more than minimal individual and cumulative adverse environmental effects (see general condition 23).

Nationwide Permit General Conditions

Note: To qualify for NWP authorization, the prospective permittee must comply with the following general conditions, as applicable, in addition to any regional or case- specific conditions imposed by the division engineer or district engineer. Prospective permittees should contact the appropriate Corps district office to determine if regional conditions have been imposed on an NWP. Prospective permittees should also contact the appropriate Corps district office to determine the status of Clean Water Act Section 401 water quality certification and/or Coastal Zone Management Act consistency for an NWP. Every person who may wish to obtain permit authorization under one or more NWPs, or who is currently relying on an existing or prior permit authorization under one or more NWPs, has been and is on notice that all of the provisions of 33 CFR 330.1 through 330.6 apply to every NWP authorization.

Note especially 33 CFR 330.5 relating to the modification, suspension, or revocation of any NWP authorization.

1. Navigation. (a) No activity may cause more than a minimal adverse effect on navigation.

(b) Any safety lights and signals prescribed by the U.S. Coast Guard, through regulations or otherwise, must be installed and maintained at the permittee's expense on authorized facilities in navigable waters of the United States.

(c) The permittee understands and agrees that, if future operations by the United States require the removal, relocation, or other alteration, of the structure or work herein authorized, or if, in the opinion of the Secretary of the Army or his authorized representative, said structure or work shall cause unreasonable obstruction to the free navigation of the navigable waters, the permittee will be required, upon due notice from the Corps of Engineers, to remove, relocate, or alter the structural work or obstructions caused thereby, without expense to the United States. No claim shall be made against the United States on account of any such removal or alteration.

2. Aquatic Life Movements. No activity may substantially disrupt the necessary life cycle movements of those species of

aquatic life indigenous to the waterbody, including those species that normally migrate through the area, unless the activity's primary purpose is to impound water. All permanent and temporary crossings of waterbodies shall be suitably culverted, bridged, or otherwise designed and constructed to maintain low flows to sustain the movement of those aquatic species. If a bottomless culvert cannot be used, then the crossing should be designed and constructed to minimize adverse effects to aquatic life movements.

3. Spawning Areas. Activities in spawning areas during spawning seasons must be avoided to the maximum extent practicable. Activities that result in the physical destruction (e.g., through excavation, fill, or downstream smothering by substantial turbidity) of an important spawning area are not authorized.

4. Migratory Bird Breeding Areas. Activities in waters of the United States that serve as breeding areas for migratory birds must be avoided to the maximum extent practicable.

5. Shellfish Beds. No activity may occur in areas of concentrated shellfish populations, unless the activity is directly related to a shellfish harvesting activity authorized by NWPs 4 and 48, or is a shellfish seeding or habitat restoration activity authorized by NWP 27.

6. Suitable Material. No activity may use unsuitable material (e.g., trash, debris, car bodies, asphalt, etc.). Material used for construction or discharged must be free from toxic pollutants in toxic amounts (see section 307 of the Clean Water Act).

7. Water Supply Intakes. No activity may occur in the proximity of a public water supply intake, except where the activity is for the repair or improvement of public water supply intake structures or adjacent bank stabilization.

8. Adverse Effects From Impoundments. If the activity creates an impoundment of water, adverse effects to the aquatic system due to accelerating the passage of water, and/or restricting its flow must be minimized to the maximum extent practicable.

9. Management of Water Flows. To the maximum extent practicable, the pre- construction course, condition, capacity, and location of open waters must be maintained for each activity, including stream channelization, storm water management activities, and temporary and permanent road crossings, except as provided below. The activity must be constructed to withstand expected high flows. The activity must not restrict or impede the passage of normal or high flows, unless the primary purpose of the activity is to impound water or manage high flows. The activity may alter the pre-construction course, condition, capacity, and location of open waters if it benefits the aquatic environment (e.g., stream restoration or relocation activities).

10. Fills Within 100-Year Floodplains. The activity must comply with applicable FEMA-approved state or local floodplain management requirements.

11. Equipment. Heavy equipment working in wetlands or mudflats must be placed on mats, or other measures must be taken to minimize soil disturbance.

12. Soil Erosion and Sediment Controls. Appropriate soil erosion and sediment controls must be used and maintained in effective operating condition during construction, and all exposed soil and other fills, as well as any work below the ordinary high water mark or high tide line, must be permanently stabilized at the earliest practicable date. Permittees are encouraged to perform work within waters of the United States during periods of low-flow or no-flow, or during low tides.

13. Removal of Temporary Fills. Temporary fills must be removed in their entirety and the affected areas returned to pre-construction elevations. The affected areas must be revegetated, as appropriate.

14. Proper Maintenance. Any authorized structure or fill shall be properly maintained, including maintenance to ensure public safety and compliance with applicable NWP general conditions, as well as any activity-specific conditions added by the district engineer to an NWP authorization.

15. Single and Complete Project. The activity must be a single and complete project. The same NWP cannot be used more than once for the same single and complete project.

16. Wild and Scenic Rivers. (a) No NWP activity may occur in a component of the National Wild and Scenic River System, or in a river officially designated by Congress as a “study river” for possible inclusion in the system while the river is in an official study status, unless the appropriate Federal agency with direct management responsibility for such river, has determined in writing that the proposed activity will not adversely affect the Wild and Scenic River designation or study status.
(b) If a proposed NWP activity will occur in a component of the National Wild and Scenic River System, or in a river officially designated by Congress as a “study river” for possible inclusion in the system while the river is in an official study status, the permittee must submit a pre-construction notification (see general condition 32). The district engineer will coordinate the PCN with the Federal agency with direct management responsibility for that river. The permittee shall not begin the NWP activity until notified by the district engineer that the Federal agency with direct management responsibility for that river has determined in writing that the proposed NWP activity will not adversely affect the Wild and Scenic River designation or study status.

(c) Information on Wild and Scenic Rivers may be obtained from the appropriate Federal land management agency responsible for the designated Wild and Scenic River or study river (e.g., National Park Service, U.S. Forest Service, Bureau of Land Management, U.S. Fish and Wildlife Service). Information on these rivers is also available at: http://www.rivers.gov/.

17. Tribal Rights. No NWP activity may cause more than minimal adverse effects on tribal rights (including treaty rights), protected tribal resources, or tribal lands.

18. Endangered Species. (a) No activity is authorized under any NWP which is likely to directly or indirectly jeopardize the continued existence of a threatened or endangered species or a species proposed for such designation, as identified under the Federal Endangered Species Act (ESA), or which will directly or indirectly destroy or adversely modify the critical habitat of such species. No activity is authorized under any NWP which "may affect" a listed species or critical habitat, unless ESA section 7 consultation addressing the effects of the proposed activity has been completed. Direct effects are the immediate effects on listed species and critical habitat caused by the NWP activity. Indirect effects are those effects on listed species and critical habitat that are caused by the NWP activity and are later in time, but still are reasonably certain to occur.
(b) Federal agencies should follow their own procedures for complying with the requirements of the ESA. If pre-construction notification is required for the proposed activity, the Federal permittee must provide the district engineer with the appropriate documentation to demonstrate compliance with those requirements. The district engineer will verify that the appropriate documentation has been submitted. If the appropriate documentation has not been submitted, additional ESA section 7 consultation may be necessary for the activity and the respective federal agency would be responsible for fulfilling its obligation under section 7 of the ESA.
(c) Non-federal permittees must submit a pre-construction notification to the district engineer if any listed species or designated critical habitat might be affected or is in the vicinity of the activity, or if the activity is located in designated critical habitat, and shall not begin work on the activity until notified by the district engineer that the requirements of the ESA have been satisfied and that the activity is authorized. For activities that might affect Federally-listed endangered or threatened species or designated critical habitat, the pre-construction notification must include the name(s) of the endangered or threatened species that might be affected by the proposed activity or that utilize the designated critical habitat that might be affected by the proposed activity. The district engineer will determine whether the proposed activity "may affect" or will have "no effect" to listed species and designated critical habitat and will notify the non- Federal applicant of the Corps' determination within 45 days of receipt of a complete pre- construction notification. In cases where the non-Federal applicant has identified listed species or critical habitat that might be affected or is in the vicinity of the activity, and has so notified the Corps, the applicant shall not begin work until the Corps has provided notification that the proposed activity will have "no effect" on listed species or critical habitat, or until ESA section 7 consultation has been completed. If the non-Federal applicant has not heard back from the Corps within 45 days, the applicant must still wait for notification from the Corps.
(d) As a result of formal or informal consultation with the FWS or NMFS the district engineer may add species-specific permit conditions to the NWPs.
(e) Authorization of an activity by an NWP does not authorize the "take" of a threatened or endangered species as defined under the ESA. In the absence of separate authorization (e.g., an ESA Section 10 Permit, a Biological Opinion with "incidental take" provisions, etc.) from the FWS or the NMFS, the Endangered Species Act prohibits any person subject to the jurisdiction of the United States to take a listed species, where "take" means to harass, harm, pursue, hunt, shoot, wound, kill, trap, capture, or collect, or to attempt to engage in any such conduct. The word "harm" in the definition of "take" means an act which actually kills or injures wildlife. Such an act may include significant habitat modification or degradation where it actually kills or injures wildlife by significantly impairing essential behavioral patterns, including breeding, feeding or sheltering.
(f) If the non-federal permittee has a valid ESA section 10(a)(1)(B) incidental take permit with an approved Habitat Conservation Plan for a project or a group of projects that includes the proposed NWP activity, the non-federal applicant should provide a copy of that ESA section 10(a)(1)(B) permit with the PCN required by paragraph (c) of this general condition. The district engineer will coordinate with the agency that issued the ESA section 10(a)(1)(B) permit to determine whether the proposed NWP activity and the associated incidental take were considered in the internal ESA section 7 consultation conducted for the ESA section 10(a)(1)(B) permit. If that coordination results in concurrence from the agency that the proposed NWP activity and the associated incidental take were considered in the internal ESA section 7 consultation for the ESA section 10(a)(1)(B) permit, the district engineer does not need to conduct a separate ESA section 7 consultation for the proposed NWP activity. The district engineer will notify the non-federal applicant within 45 days of receipt of a complete pre-construction notification whether the ESA section 10(a)(1)(B) permit covers the proposed NWP activity or whether additional ESA section 7 consultation is required.
(g) Information on the location of threatened and endangered species and their critical habitat can be obtained directly from the offices of the FWS and NMFS or their world wide web pages at http://www.fws.gov/ or http://www.fws.gov/ipac and http://www.nmfs.noaa.gov/pr/species/esa/ respectively.

19. Migratory Birds and Bald and Golden Eagles. The permittee is responsible for ensuring their action complies with the Migratory Bird Treaty Act and the Bald and Golden Eagle Protection Act. The permittee is responsible for contacting appropriate local office of the U.S. Fish and Wildlife Service to determine applicable measures to reduce impacts to migratory birds or eagles, including whether "incidental take" permits are necessary and available under the Migratory Bird Treaty Act or Bald and Golden Eagle Protection Act for a particular activity.

20. Historic Properties. (a) In cases where the district engineer determines that the activity may have the potential to cause effects to properties listed, or eligible for listing, in the National Register of Historic Places, the activity is not authorized, until the requirements of Section 106 of the National Historic Preservation Act (NHPA) have been satisfied.
(b) Federal permittees should follow their own procedures for complying with the requirements of section 106 of the National Historic Preservation Act. If pre-construction notification is required for the proposed NWP activity, the Federal permittee must provide the district engineer with the appropriate documentation to demonstrate compliance with those requirements. The district engineer will verify that the appropriate documentation has been submitted. If the appropriate documentation is not submitted, then additional consultation under section 106 may be necessary. The respective federal agency is responsible for fulfilling its obligation to comply with section 106.
(c) Non-federal permittees must submit a pre-construction notification to the district engineer if the NWP activity might have the potential to cause effects to any historic properties listed on, determined to be eligible for listing on, or potentially eligible for listing on the National Register of Historic Places, including previously unidentified properties. For such activities, the pre-construction notification must state which historic properties might have the potential to be affected by the proposed NWP activity or include a vicinity map indicating the location of the historic properties or the potential for the presence of historic properties. Assistance regarding information on the location of, or potential for, the presence of historic properties can be sought from the State Historic Preservation Officer, Tribal Historic Preservation Officer, or designated tribal representative, as appropriate, and the National Register of Historic Places (see 33 CFR 330.4(g)). When reviewing pre-construction notifications, district engineers will comply with the current procedures for addressing the requirements of section 106 of the National Historic Preservation Act. The district engineer shall make a reasonable and good faith effort to carry out appropriate identification efforts, which may include background research, consultation, oral history interviews, sample field investigation, and field survey. Based on the information submitted in the PCN and these identification efforts, the district engineer shall determine whether the proposed NWP activity has the potential to cause effects on the historic properties. Section 106 consultation is not required when the district engineer determines that the activity does not have the potential to cause effects on historic properties (see 36 CFR 800.3(a)). Section 106 consultation is required when the district engineer determines that the activity has the potential to cause effects on historic properties. The district engineer will conduct consultation with consulting parties identified under 36 CFR 800.2(c) when he or she makes any of the following effect determinations for the purposes of section 106 of the NHPA: no historic properties affected, no adverse effect, or adverse effect. Where the non-Federal applicant has identified historic properties on which the activity might have the potential to cause effects and so notified the Corps, the non-Federal applicant shall not begin the activity until notified by the district engineer either that the activity has no potential to cause effects to historic properties or that NHPA section 106 consultation has been completed.
(d) For non-federal permittees, the district engineer will notify the prospective permittee within 45 days of receipt of a complete pre-construction notification whether NHPA section 106 consultation is required. If NHPA section 106 consultation is required, the district engineer will notify the non-Federal applicant that he or she cannot begin the activity until section 106 consultation is completed. If the non-Federal applicant has not heard back from the Corps within 45 days, the applicant must still wait for notification from the Corps.
(e) Prospective permittees should be aware that section 110k of the NHPA (54
U.S.C. 306113) prevents the Corps from granting a permit or other assistance to an applicant who, with intent to avoid the requirements of section 106 of the NHPA, has intentionally significantly adversely affected a historic property to which the permit would relate, or having legal power to prevent it, allowed such significant adverse effect to occur, unless the Corps, after consultation with the Advisory Council on Historic Preservation (ACHP), determines that circumstances justify granting such assistance despite the adverse effect created or permitted by the applicant. If circumstances justify granting the assistance, the Corps is required to notify the ACHP and provide documentation specifying the circumstances, the degree of damage to the integrity of any historic properties affected, and proposed mitigation. This documentation must include any views obtained from the applicant, SHPO/THPO, appropriate Indian tribes if the undertaking occurs on or affects historic properties on tribal lands or affects properties of interest to those tribes, and other parties known to have a legitimate interest in the impacts to the permitted activity on historic properties.

21. Discovery of Previously Unknown Remains and Artifacts. If you discover any previously unknown historic, cultural or archeological remains and artifacts while accomplishing the activity authorized by this permit, you must immediately notify the district engineer of what you have found, and to the maximum extent practicable, avoid construction activities that

may affect the remains and artifacts until the required coordination has been completed. The district engineer will initiate the Federal, Tribal, and state coordination required to determine if the items or remains warrant a recovery effort or if the site is eligible for listing in the National Register of Historic Places.

22. Designated Critical Resource Waters. Critical resource waters include, NOAA-managed marine sanctuaries and marine monuments, and National Estuarine Research Reserves. The district engineer may designate, after notice and opportunity for public comment, additional waters officially designated by a state as having particular environmental or ecological significance, such as outstanding national resource waters or state natural heritage sites. The district engineer may also designate additional critical resource waters after notice and opportunity for public comment.
(a) Discharges of dredged or fill material into waters of the United States are not authorized by NWPs 7, 12, 14, 16, 17, 21, 29, 31, 35, 39, 40, 42, 43, 44, 49, 50, 51, and 52 for any activity within, or directly affecting, critical resource waters, including wetlands adjacent to such waters.
(b) For NWPs 3, 8, 10, 13, 15, 18, 19, 22, 23, 25, 27, 28, 30, 33, 34, 36, 37, 38, and 54, notification is required in accordance with general condition 32, for any activity proposed in the designated critical resource waters including wetlands adjacent to those waters. The district engineer may authorize activities under these NWPs only after it is determined that the impacts to the critical resource waters will be no more than minimal.

23. Mitigation. The district engineer will consider the following factors when determining appropriate and practicable mitigation necessary to ensure that the individual and cumulative adverse environmental effects are no more than minimal:
(a) The activity must be designed and constructed to avoid and minimize adverse effects, both temporary and permanent, to waters of the United States to the maximum extent practicable at the project site (i.e., on site).
(b) Mitigation in all its forms (avoiding, minimizing, rectifying, reducing, or compensating for resource losses) will be required to the extent necessary to ensure that the individual and cumulative adverse environmental effects are no more than minimal.
(c) Compensatory mitigation at a minimum one-for-one ratio will be required for all wetland losses that exceed 1/10-acre and require pre-construction notification, unless the district engineer determines in writing that either some other form of mitigation would be more environmentally appropriate or the adverse environmental effects of the proposed activity are no more than minimal, and provides an activity-specific waiver of this requirement. For wetland losses of 1/10-acre or less that require pre-construction notification, the district engineer may determine on a case-by-case basis that compensatory mitigation is required to ensure that the activity results in only minimal adverse environmental effects.
(d) For losses of streams or other open waters that require pre-construction notification, the district engineer may require compensatory mitigation to ensure that the activity results in no more than minimal adverse environmental effects. Compensatory mitigation for losses of streams should be provided, if practicable, through stream rehabilitation, enhancement, or preservation, since streams are difficult-to-replace resources (see 33 CFR 332.3(e)(3)).
(e) Compensatory mitigation plans for NWP activities in or near streams or other open waters will normally include a requirement for the restoration or enhancement, maintenance, and legal protection (e.g., conservation easements) of riparian areas next to open waters. In some cases, the restoration or maintenance/protection of riparian areas may be the only compensatory mitigation required. Restored riparian areas should consist of native species. The width of the required riparian area will address documented water quality or aquatic habitat loss concerns. Normally, the riparian area will be 25 to 50 feet wide on each side of the stream, but the district engineer may require slightly wider riparian areas to address documented water quality or habitat loss concerns. If it is not possible to restore or maintain/protect a riparian area on both sides of a stream, or if the waterbody is a lake or coastal waters, then restoring or maintaining/protecting a riparian area along a single bank or shoreline may be sufficient. Where both wetlands and open waters exist on the project site, the district engineer will determine the appropriate compensatory mitigation (e.g., riparian areas and/or wetlands compensation) based on what is best for the aquatic environment on a watershed basis. In cases where riparian areas are determined to be the most appropriate form of minimization or compensatory mitigation, the district engineer may waive or reduce the requirement to provide wetland compensatory mitigation for wetland losses.
(f) Compensatory mitigation projects provided to offset losses of aquatic resources must comply with the applicable provisions of 33 CFR part 332.
(1) The prospective permittee is responsible for proposing an appropriate compensatory mitigation option if compensatory mitigation is necessary to ensure that the activity results in no more than minimal adverse environmental effects. For the NWPs, the preferred mechanism for providing compensatory mitigation is mitigation bank credits or in-lieu fee program credits (see 33 CFR 332.3(b)(2) and (3)). However, if an appropriate number and type of mitigation bank or in-lieu credits are not available at the time the PCN is submitted to the district engineer, the district engineer may approve the use of permittee-responsible mitigation.
(2) The amount of compensatory mitigation required by the district engineer must be sufficient to ensure that the authorized activity results in no more than minimal individual and cumulative adverse environmental effects (see 33 CFR 330.1(e)(3)). (See also 33 CFR 332.3(f)).

(3) Since the likelihood of success is greater and the impacts to potentially valuable uplands are reduced, aquatic resource restoration should be the first compensatory mitigation option considered for permittee-responsible mitigation.
(4) If permittee-responsible mitigation is the proposed option, the prospective permittee is responsible for submitting a mitigation plan. A conceptual or detailed mitigation plan may be used by the district engineer to make the decision on the NWP verification request, but a final mitigation plan that addresses the applicable requirements of 33 CFR 332.4(c)(2) through (14) must be approved by the district engineer before the permittee begins work in waters of the United States, unless the district engineer determines that prior approval of the final mitigation plan is not practicable or not necessary to ensure timely completion of the required compensatory mitigation (see 33 CFR 332.3(k)(3)).
(5) If mitigation bank or in-lieu fee program credits are the proposed option, the mitigation plan only needs to address the baseline conditions at the impact site and the number of credits to be provided.
(6) Compensatory mitigation requirements (e.g., resource type and amount to be provided as compensatory mitigation, site protection, ecological performance standards, monitoring requirements) may be addressed through conditions added to the NWP authorization, instead of components of a compensatory mitigation plan (see 33 CFR 332.4(c)(1)(ii)).
(g) Compensatory mitigation will not be used to increase the acreage losses allowed by the acreage limits of the NWPs. For example, if an NWP has an acreage limit of 1/2-acre, it cannot be used to authorize any NWP activity resulting in the loss of greater than 1/2-acre of waters of the United States, even if compensatory mitigation is provided that replaces or restores some of the lost waters. However, compensatory mitigation can and should be used, as necessary, to ensure that an NWP activity already meeting the established acreage limits also satisfies the no more than minimal impact requirement for the NWPs.
(h) Permittees may propose the use of mitigation banks, in-lieu fee programs, or permittee-responsible mitigation. When developing a compensatory mitigation proposal, the permittee must consider appropriate and practicable options consistent with the framework at 33 CFR 332.3(b). For activities resulting in the loss of marine or estuarine resources, permittee-responsible mitigation may be environmentally preferable if there are no mitigation banks or in-lieu fee programs in the area that have marine or estuarine credits available for sale or transfer to the permittee. For permittee-responsible mitigation, the special conditions of the NWP verification must clearly indicate the party or parties responsible for the implementation and performance of the compensatory mitigation project, and, if required, its long-term management.
(i) Where certain functions and services of waters of the United States are permanently adversely affected by a regulated activity, such as discharges of dredged or fill material into waters of the United States that will convert a forested or scrub-shrub wetland to a herbaceous wetland in a permanently maintained utility line right-of-way, mitigation may be required to reduce the adverse environmental effects of the activity to the no more than minimal level.

24. Safety of Impoundment Structures. To ensure that all impoundment structures are safely designed, the district engineer may require non-Federal applicants to demonstrate that the structures comply with established state dam safety criteria or have been designed by qualified persons. The district engineer may also require documentation that the design has been independently reviewed by similarly qualified persons, and appropriate modifications made to ensure safety.

25. Water Quality. Where States and authorized Tribes, or EPA where applicable, have not previously certified compliance of an NWP with CWA section 401, individual 401 Water Quality Certification must be obtained or waived (see 33 CFR 330.4(c)). The district engineer or State or Tribe may require additional water quality management measures to ensure that the authorized activity does not result in more than minimal degradation of water quality.

26. Coastal Zone Management. In coastal states where an NWP has not previously received a state coastal zone management consistency concurrence, an individual state coastal zone management consistency concurrence must be obtained, or a presumption of concurrence must occur (see 33 CFR 330.4(d)). The district engineer or a State may require additional measures to ensure that the authorized activity is consistent with state coastal zone management requirements.

27. Regional and Case-By-Case Conditions. The activity must comply with any regional conditions that may have been added by the Division Engineer (see 33 CFR 330.4(e)) and with any case specific conditions added by the Corps or by the state, Indian Tribe, or U.S. EPA in its section 401 Water Quality Certification, or by the state in its Coastal Zone Management Act consistency determination.

28. Use of Multiple Nationwide Permits. The use of more than one NWP for a single and complete project is prohibited, except when the acreage loss of waters of the United States authorized by the NWPs does not exceed the acreage limit of the NWP with the highest specified acreage limit. For example, if a road crossing over tidal waters is constructed under NWP 14, with associated bank stabilization authorized by NWP 13, the maximum acreage loss of waters of the United States for the total project cannot exceed 1/3-acre.

29. Transfer of Nationwide Permit Verifications. If the permittee sells the property associated with a nationwide permit verification, the permittee may transfer the nationwide permit verification to the new owner by submitting a letter to the appropriate Corps district office to validate the transfer. A copy of the nationwide permit verification must be attached to

the letter, and the letter must contain the following statement and signature:

"When the structures or work authorized by this nationwide permit are still in existence at the time the property is transferred, the terms and conditions of this nationwide permit, including any special conditions, will continue to be binding on the new owner(s) of the property. To validate the transfer of this nationwide permit and the associated liabilities associated with compliance with its terms and conditions, have the transferee sign and date below."

(Transferee)

_____

(Date)

_____

30. Compliance Certification. Each permittee who receives an NWP verification letter from the Corps must provide a signed certification documenting completion of the authorized activity and implementation of any required compensatory mitigation. The success of any required permittee-responsible mitigation, including the achievement of ecological performance standards, will be addressed separately by the district engineer. The Corps will provide the permittee the certification document with the NWP verification letter. The certification document will include:
(a) A statement that the authorized activity was done in accordance with the NWP authorization, including any general, regional, or activity-specific conditions;
(b) A statement that the implementation of any required compensatory mitigation was completed in accordance with the permit conditions. If credits from a mitigation bank or in-lieu fee program are used to satisfy the compensatory mitigation requirements, the certification must include the documentation required by 33 CFR 332.3(l)(3) to confirm that the permittee secured the appropriate number and resource type of credits; and
(c) The signature of the permittee certifying the completion of the activity and mitigation.

The completed certification document must be submitted to the district engineer within 30 days of completion of the authorized activity or the implementation of any required compensatory mitigation, whichever occurs later.

31. Activities Affecting Structures or Works Built by the United States. If an NWP activity also requires permission from the Corps pursuant to 33 U.S.C. 408 because it will alter or temporarily or permanently occupy or use a U.S. Army Corps of Engineers (USACE) federally authorized Civil Works project (a "USACE project"), the prospective permittee must submit a pre-construction notification. See paragraph (b)(10) of general condition 32. An activity that requires section 408 permission is not authorized by NWP until the appropriate Corps office issues the section 408 permission to alter, occupy, or use the USACE project, and the district engineer issues a written NWP verification.

32. Pre-Construction Notification. (a) Timing. Where required by the terms of the NWP, the prospective permittee must notify the district engineer by submitting a pre-construction notification (PCN) as early as possible. The district engineer must determine if the PCN is complete within 30 calendar days of the date of receipt and, if the PCN is determined to be incomplete, notify the prospective permittee within that 30 day period to request the additional information necessary to make the PCN complete. The request must specify the information needed to make the PCN complete. As a general rule, district engineers will request additional information necessary to make the PCN complete only once. However, if the prospective permittee does not provide all of the requested information, then the district engineer will notify the prospective permittee that the PCN is still incomplete and the PCN review process will not commence until all of the requested information has been received by the district engineer. The prospective permittee shall not begin the activity until either:
(1) He or she is notified in writing by the district engineer that the activity may proceed under the NWP with any special conditions imposed by the district or division engineer; or
(2) 45 calendar days have passed from the district engineer's receipt of the complete PCN and the prospective permittee has not received written notice from the district or division engineer. However, if the permittee was required to notify the Corps pursuant to general condition 18 that listed species or critical habitat might be affected or are in the vicinity of the activity, or to notify the Corps pursuant to general condition 20 that the activity might have the potential to cause effects to historic properties, the permittee cannot begin the activity until receiving written notification from the Corps that there is "no effect" on listed species or "no potential to cause effects" on historic properties, or that any consultation required under Section 7 of the Endangered Species Act (see 33 CFR 330.4(f)) and/or section 106 of the National Historic Preservation Act (see 33 CFR 330.4(g)) has been completed. Also, work cannot begin under NWPs 21, 49, or 50 until the permittee has received written approval from the Corps. If the proposed activity requires a written waiver to exceed specified limits of an NWP, the permittee may not begin the activity until the district engineer issues the waiver. If the district or division engineer notifies the permittee in writing that an individual permit is required within 45 calendar days of receipt of a complete PCN, the permittee cannot begin the activity until an individual permit has been obtained. Subsequently, the permittee's right to proceed under the NWP

may be modified, suspended, or revoked only in accordance with the procedure set forth in 33 CFR 330.5(d)(2).
(b) Contents of Pre-Construction Notification: The PCN must be in writing and include the following information:
(1) Name, address and telephone numbers of the prospective permittee;
(2) Location of the proposed activity;
(3) Identify the specific NWP or NWP(s) the prospective permittee wants to use to authorize the proposed activity;
(4) A description of the proposed activity; the activity's purpose; direct and indirect adverse environmental effects the activity would cause, including the anticipated amount of loss of wetlands, other special aquatic sites, and other waters expected to result from the NWP activity, in acres, linear feet, or other appropriate unit of measure; a description of any proposed mitigation measures intended to reduce the adverse environmental effects caused by the proposed activity; and any other NWP(s), regional general permit(s), or individual permit(s) used or intended to be used to authorize any part of the proposed project or any related activity, including other separate and distant crossings for linear projects that require Department of the Army authorization but do not require pre-construction notification. The description of the proposed activity and any proposed mitigation measures should be sufficiently detailed to allow the district engineer to determine that the adverse environmental effects of the activity will be no more than minimal and to determine the need for compensatory mitigation or other mitigation measures. For single and complete linear projects, the PCN must include the quantity of anticipated losses of wetlands, other special aquatic sites, and other waters for each single and complete crossing of those wetlands, other special aquatic sites, and other waters. Sketches should be provided when necessary to show that the activity complies with the terms of the NWP. (Sketches usually clarify the activity and when provided results in a quicker decision. Sketches should contain sufficient detail to provide an illustrative description of the proposed activity (e.g., a conceptual plan), but do not need to be detailed engineering plans);
(5) The PCN must include a delineation of wetlands, other special aquatic sites, and other waters, such as lakes and ponds, and perennial, intermittent, and ephemeral streams, on the project site. Wetland delineations must be prepared in accordance with the current method required by the Corps. The permittee may ask the Corps to delineate the special aquatic sites and other waters on the project site, but there may be a delay if the Corps does the delineation, especially if the project site is large or contains many wetlands, other special aquatic sites, and other waters. Furthermore, the 45-day period will not start until the delineation has been submitted to or completed by the Corps, as appropriate;
(6) If the proposed activity will result in the loss of greater than 1/10-acre of wetlands and a PCN is required, the prospective permittee must submit a statement describing how the mitigation requirement will be satisfied, or explaining why the adverse environmental effects are no more than minimal and why compensatory mitigation should not be required. As an alternative, the prospective permittee may submit a conceptual or detailed mitigation plan.
(7) For non-Federal permittees, if any listed species or designated critical habitat might be affected or is in the vicinity of the activity, or if the activity is located in designated critical habitat, the PCN must include the name(s) of those endangered or threatened species that might be affected by the proposed activity or utilize the designated critical habitat that might be affected by the proposed activity. For NWP activities that require pre-construction notification, Federal permittees must provide documentation demonstrating compliance with the Endangered Species Act;
(8) For non-Federal permittees, if the NWP activity might have the potential to cause effects to a historic property listed on, determined to be eligible for listing on, or potentially eligible for listing on, the National Register of Historic Places, the PCN must state which historic property might have the potential to be affected by the proposed activity or include a vicinity map indicating the location of the historic property. For NWP activities that require pre-construction notification, Federal permittees must provide documentation demonstrating compliance with section 106 of the National Historic Preservation Act;
(9) For an activity that will occur in a component of the National Wild and Scenic River System, or in a river officially designated by Congress as a "study river" for possible inclusion in the system while the river is in an official study status, the PCN must identify the Wild and Scenic River or the "study river" (see general condition 16); and
(10) For an activity that requires permission from the Corps pursuant to 33 U.S.C. 408 because it will alter or temporarily or permanently occupy or use a U.S. Army Corps of Engineers federally authorized civil works project, the pre-construction notification must include a statement confirming that the project proponent has submitted a written request for section 408 permission from the Corps office having jurisdiction over that USACE project.
(c) Form of Pre-Construction Notification: The standard individual permit application form (Form ENG 4345) may be used, but the completed application form must clearly indicate that it is an NWP PCN and must include all of the applicable information required in paragraphs (b)(1) through (10) of this general condition. A letter containing the required information may also be used. Applicants may provide electronic files of PCNs and supporting materials if the district engineer has established tools and procedures for electronic submittals.
(d) Agency Coordination: (1) The district engineer will consider any comments from Federal and state agencies concerning the proposed activity's compliance with the terms and conditions of the NWPs and the need for mitigation to reduce the activity's adverse environmental effects so that they are no more than minimal.
(2) Agency coordination is required for: (i) all NWP activities that require pre- construction notification and result in the loss

of greater than 1/2-acre of waters of the United States; (ii) NWP 21, 29, 39, 40, 42, 43, 44, 50, 51, and 52 activities that require pre-construction notification and will result in the loss of greater than 300 linear feet of stream bed; (iii) NWP 13 activities in excess of 500 linear feet, fills greater than one cubic yard per running foot, or involve discharges of dredged or fill material into special aquatic sites; and (iv) NWP 54 activities in excess of 500 linear feet, or that extend into the waterbody more than 30 feet from the mean low water line in tidal waters or the ordinary high water mark in the Great Lakes.

(3) When agency coordination is required, the district engineer will immediately provide (e.g., via e-mail, facsimile transmission, overnight mail, or other expeditious manner) a copy of the complete PCN to the appropriate Federal or state offices (FWS, state natural resource or water quality agency, EPA, and, if appropriate, the NMFS). With the exception of NWP 37, these agencies will have 10 calendar days from the date the material is transmitted to notify the district engineer via telephone, facsimile transmission, or e-mail that they intend to provide substantive, site-specific comments. The comments must explain why the agency believes the adverse environmental effects will be more than minimal. If so contacted by an agency, the district engineer will wait an additional 15 calendar days before making a decision on the pre-construction notification. The district engineer will fully consider agency comments received within the specified time frame concerning the proposed activity's compliance with the terms and conditions of the NWPs, including the need for mitigation to ensure the net adverse environmental effects of the proposed activity are no more than minimal. The district engineer will provide no response to the resource agency, except as provided below. The district engineer will indicate in the administrative record associated with each pre-construction notification that the resource agencies' concerns were considered. For NWP 37, the emergency watershed protection and rehabilitation activity may proceed immediately in cases where there is an unacceptable hazard to life or a significant loss of property or economic hardship will occur. The district engineer will consider any comments received to decide whether the NWP 37 authorization should be modified, suspended, or revoked in accordance with the procedures at 33 CFR 330.5.

(4) In cases of where the prospective permittee is not a Federal agency, the district engineer will provide a response to NMFS within 30 calendar days of receipt of any Essential Fish Habitat conservation recommendations, as required by section 305(b)(4)(B) of the Magnuson-Stevens Fishery Conservation and Management Act.

(5) Applicants are encouraged to provide the Corps with either electronic files or multiple copies of pre-construction notifications to expedite agency coordination.

District Engineer's Decision

In reviewing the PCN for the proposed activity, the district engineer will determine whether the activity authorized by the NWP will result in more than minimal individual or cumulative adverse environmental effects or may be contrary to the public interest. If a project proponent requests authorization by a specific NWP, the district engineer should issue the NWP verification for that activity if it meets the terms and conditions of that NWP, unless he or she determines, after considering mitigation, that the proposed activity will result in more than minimal individual and cumulative adverse effects on the aquatic environment and other aspects of the public interest and exercises discretionary authority to require an individual permit for the proposed activity. For a linear project, this determination will include an evaluation of the individual crossings of waters of the United States to determine whether they individually satisfy the terms and conditions of the NWP(s), as well as the cumulative effects caused by all of the crossings authorized by NWP. If an applicant requests a waiver of the 300 linear foot limit on impacts to streams or of an otherwise applicable limit, as provided for in NWPs 13, 21, 29, 36, 39, 40, 42, 43, 44, 50, 51, 52, or 54, the district engineer will only grant the waiver upon a written determination that the NWP activity will result in only minimal individual and cumulative adverse environmental effects. For those NWPs that have a waivable 300 linear foot limit for losses of intermittent and ephemeral stream bed and a 1/2-acre limit (i.e., NWPs 21, 29, 39, 40, 42, 43, 44, 50, 51, and 52), the loss of intermittent and ephemeral stream bed, plus any other losses of jurisdictional waters and wetlands, cannot exceed 1/2-acre.

1. When making minimal adverse environmental effects determinations the district engineer will consider the direct and indirect effects caused by the NWP activity. He or she will also consider the cumulative adverse environmental effects caused by activities authorized by NWP and whether those cumulative adverse environmental effects are no more than minimal. The district engineer will also consider site specific factors, such as the environmental setting in the vicinity of the NWP activity, the type of resource that will be affected by the NWP activity, the functions provided by the aquatic resources that will be affected by the NWP activity, the degree or magnitude to which the aquatic resources perform those functions, the extent that aquatic resource functions will be lost as a result of the NWP activity (e.g., partial or complete loss), the duration of the adverse effects (temporary or permanent), the importance of the aquatic resource functions to the region (e.g., watershed or ecoregion), and mitigation required by the district engineer. If an appropriate functional or condition assessment method is available and practicable to use, that assessment method may be used by the district engineer to assist in the minimal adverse environmental effects determination. The district engineer may add case-specific special conditions to the NWP authorization to address site- specific environmental concerns.

2. If the proposed activity requires a PCN and will result in a loss of greater than 1/10-acre of wetlands, the prospective permittee should submit a mitigation proposal with the PCN. Applicants may also propose compensatory mitigation for NWP activities with smaller impacts, or for impacts to other types of waters (e.g., streams). The district engineer will consider any proposed compensatory mitigation or other mitigation measures the applicant has included in the proposal in determining whether the net adverse environmental effects of the proposed activity are no more than minimal. The compensatory mitigation proposal may be either conceptual or detailed. If the district engineer determines that the activity complies with the terms and conditions of the NWP and that the adverse environmental effects are no more than minimal, after considering mitigation, the district engineer will notify the permittee and include any activity-specific conditions in the NWP verification the district engineer deems necessary. Conditions for compensatory mitigation requirements must comply with the appropriate provisions at 33 CFR 332.3(k). The district engineer must approve the final mitigation plan before the permittee commences work in waters of the United States, unless the district engineer determines that prior approval of the final mitigation plan is not practicable or not necessary to ensure timely completion of the required compensatory mitigation. If the prospective permittee elects to submit a compensatory mitigation plan with the PCN, the district engineer will expeditiously review the proposed compensatory mitigation plan. The district engineer must review the proposed compensatory mitigation plan within 45 calendar days of receiving a complete PCN and determine whether the proposed mitigation would ensure the NWP activity results in no more than minimal adverse environmental effects. If the net adverse environmental effects of the NWP activity (after consideration of the mitigation proposal) are determined by the district engineer to be no more than minimal, the district engineer will provide a timely written response to the applicant. The response will state that the NWP activity can proceed under the terms and conditions of the NWP, including any activity-specific conditions added to the NWP authorization by the district engineer.

3. If the district engineer determines that the adverse environmental effects of the proposed activity are more than minimal, then the district engineer will notify the applicant either: (a) that the activity does not qualify for authorization under the NWP and instruct the applicant on the procedures to seek authorization under an individual permit; (b) that the activity is authorized under the NWP subject to the applicant's submission of a mitigation plan that would reduce the adverse environmental effects so that they are no more than minimal; or (c) that the activity is authorized under the NWP with specific modifications or conditions. Where the district engineer determines that mitigation is required to ensure no more than minimal adverse environmental effects, the activity will be authorized within the 45-day PCN period (unless additional time is required to comply with general conditions 18, 20, and/or 31, or to evaluate PCNs for activities authorized by NWPs 21, 49, and 50), with activity-specific conditions that state the mitigation requirements. The authorization will include the necessary conceptual or detailed mitigation plan or a requirement that the applicant submit a mitigation plan that would reduce the adverse environmental effects so that they are no more than minimal. When compensatory mitigation is required, no work in waters of the United States may occur until the district engineer has approved a specific mitigation plan or has determined that prior approval of a final mitigation plan is not practicable or not necessary to ensure timely completion of the required compensatory mitigation.

Further Information

1. District Engineers have authority to determine if an activity complies with the terms and conditions of an NWP.
2. NWPs do not obviate the need to obtain other federal, state, or local permits, approvals, or authorizations required by law.
3. NWPs do not grant any property rights or exclusive privileges.
4. NWPs do not authorize any injury to the property or rights of others.
5. NWPs do not authorize interference with any existing or proposed Federal project (see general condition 31)

Missouri Department of Natural Resources

CLEAN WATER ACT SECTION 401 WATER QUALITY CERTIFICATION 2017 GENERAL AND SPECIFIC CONDITIONS

Water Protection Program 03/2017

Division of Environmental Quality Acting Director: Steve Feeler PUB02235

Consistent with Section 401 of the Clean Water Act, these precertified conditions are designed to ensure activities carried out under Nationwide Permits (NWPs) authorized by the U.S. Army Corps of Engineers (USACE) do not violate Missouri Water Quality Standards at 10 CSR 20-7.031, resulting in permanent damage to habitat, increased turbidity, reduced bank and channel stability or impacts to the biological and chemical integrity of the waters. Where applicable, these conditions are in addition to, not a replacement for, any federal requirements or conditions.

The conditions outlined in this document apply to those authorized projects where the applicant has chosen to accept these conditions instead of pursuing an individual Clean Water Act Section 401 Water Quality Certification (WQC) for the following NWPs:

- Only General Conditions apply to projects authorized by NWPs 5, 7, 15, 18, 23, 25, 27, 29, 30, 31, 36, 39, 40, 43, 45, and 46.
- Both General and Specific Conditions apply to projects authorized by NWPs 3, 4, 6, 7, 12, 13, 14, 16, 19, 20, 22, 33, 41, 42, 53 and 54.

Alternatively, an applicant may apply for individual WQC if they do not wish to accept the conditions outlined in this document.

Projects authorized by NWPs 17, 21, 32, 34, 37, 38, 44, 48, 49, 50, 51 and 52 require individual WQC by the Department of Natural Resources.

NWPs 1, 2, 8, 9, 10, 11, 28 and 35 authorize projects under Section 10 of the Rivers and Harbors Act of 1899 only. An activity needing only a Section 10 permit may require a WQC if that activity can reasonably be expected to result in any discharge either during construction or operation of the facility. Thus, if the agency determines the activity is likely to result in a discharge during construction or operation, the Department of Natural Resources has the discretion to require a WQC for a Section 10 activity. The USACE will advise a Section 10 permit applicant that they may need a WQC if there is a reasonable expectation that a discharge will occur either during the construction or operation of the project.

Pursuant to Chapter 644.037, RSMo, the Department of Natural Resources shall certify without conditions NWPs as they apply to impacts on wetlands in Missouri.

Pursuant to Chapter 644.038, RSMo, the Department of Natural Resources certifies all NWPs for impacts in all waters of the state without the above-stated or any other conditions for the construction of highways and bridges approved by the Missouri Highway and Transportation Commission. The Memorandum of Understanding of 2016 and any subsequent modifications between the two agencies outline the requirements by which the Missouri Department of Transportation will design and construct projects in order to protect the water quality of waters of the state.

GENERAL CONDITIONS

1. NWPs shall not allow the filling of jurisdictional springs such as those associated with a water body's point of origin or located in a streambed.

2. Acquisition of NWPs and the attendant WQCs shall not be construed or interpreted to imply the requirements for other permits are replaced or superseded, including Clean Water Act Section 402 National Pollutant Discharge Elimination System Permits for land disturbance or return water from material deposition. Permits or any other requirements shall remain in effect. Applicants with questions are encouraged to contact the Department of Natural Resources' regional office in the project area. A regional office map with contact information can be located at www.dnr.mo.gov/regions/regions.htm.

3. Care shall be taken to keep machinery out of the water way as much as possible. If work in the water way is unavoidable, it shall be performed in a way that minimizes the duration and amount of any disturbance to banks, substrate and vegetation to prevent increases in turbidity. Fuel, oil and other petroleum products, equipment, construction materials and any solid waste shall not be stored below the ordinary high water mark at any time or in the adjacent flood-prone areas beyond normal working hours. All precautions shall be taken to avoid the release of wastes or fuel to streams and other adjacent waters as a result of this operation.

4. Petroleum products spilled into any water or on the banks where the material may enter waters of the state shall be immediately cleaned up and disposed of properly. Any such spills of petroleum shall be reported as soon as possible, but no later than 24 hours after discovery to the Department of Natural Resources' Environmental Emergency Response number at 573-634-2436 or website at http://dnr.mo.gov/env/esp/esp-eer.htm.

5. Only clean, nonpolluting fill shall be used. The following materials are not suitable where contact with water is expected such as for bank stabilization, and shall not be used due to their potential to cause violations of the general and numeric criteria of the Water Quality Standards:
   a. Earthen fill, gravel, broken concrete where the material does not meet the specifications stated in the "Missouri Nationwide Permit Regional Conditions" (http://www.nwk.usace.army.mil/Portals/29/docs/regulatory/nationwidepermits/2017/2017NWP_MORegCon.pdf?ver=2017-03-17-114205-543) and fragmented asphalt, since these materials are usually not substantial enough to withstand erosive flows.
   b. Concrete with exposed rebar.
   c. Tires, vehicles or vehicle bodies, construction or demolition debris are solid waste and are excluded from placement in the waters of the state.
   d. Liquid concrete, including grouted riprap, if not placed as part of an engineered structure.
   e. Any material containing chemicals that would result in violation of water quality standards.

6. Clearing of vegetation and trees shall be the minimum necessary to accomplish the activity except for the removal of invasive or noxious species and placement of ecologically beneficial practices. A vegetated riparian buffer strip shall be maintained during all stages of the project, including post-construction, from the high bank on either side of the jurisdictional channel to protect water quality and to provide for long-term stability of the stream channel, unless physical barriers prevent such a corridor. For purposes of these NWPs, lack of ownership or control of any portion of the riparian buffer strip may be considered a legitimate and discretionary cause to waive this requirement on that portion.

7. An individual WQC is required for any NWP issued on a water that is:
   a. Listed for a sediment-related impairment, aquatic habitat alteration or unknown impairment as listed in the most current Water Quality Report (Section 305(b) Report) at http://dnr.mo.gov/env/wpp/waterquality/303d/303d.htm; or
   b. Located in or occur within two miles upstream of a designated outstanding state or national resource water as found in 10 CSR 20-7.031, Tables D and E at http://s1.sos.mo.gov/cmsimages/adrules/csr/current/10csr/10c20-7a.pdf.

   The Department of Natural Resources' geospatial data is available upon request, and all published data is available on the Missouri Spatial Data Information Services website at msdis.missouri.edu/. Additional information to identify the project location, including stream reaches with listed impairments or special water designations, may be obtained from the Department of Natural Resources' Water Protection Program at 573-522-4502.

8. Discharge to designated metropolitan no-discharge streams is prohibited, except as specifically permitted under the Water Quality Standards, 10 CSR 20-7.031, and non-contaminated stormwater flows. No water contaminant except uncontaminated cooling water, permitted stormwater discharges in compliance with permit conditions, and excess wet-weather bypass discharges not interfering with beneficial uses should be discharged to the watersheds of streams listed in 10 CSR 20-7.031, Table F at http://s1.sos.mo.gov/cmsimages/adrules/csr/current/10csr/10c20-7a.pdf.

9. A stream's pattern, profile and dimension, including but not limited to sinuosity, slope and channel width, shall be maintained as much as practicable. Streambed gradient shall not be adversely impacted during project construction. No project shall accelerate bed or bank erosion.

10. NWPs authorized by the USACE for which the district engineer waives the impact limit related to linear feet (LF) or width shall require notification to the Department of Natural Resources. The Department of Natural Resources shall

respond within 15 calendar days whether or not individual WQC would be required. This is applicable to NWPs 13, 29, 36, 39, 40, 42, 43, 44, 50, 51, 52 and 54.

11. Proposed projects authorized by the USACE and containing a waiver of any "Missouri Nationwide Permit Regional Condition," except Regional Conditions 2, 3 and 7, shall require an individual WQC by the state.

12. Representatives from the Department of Natural Resources shall be allowed upon request on the project property, which includes the site(s) where the authorized activity takes place and any associated compensatory mitigation site(s), to inspect the authorized activity and mitigation efforts as deemed necessary by the Department of Natural Resources to ensure compliance with WQC conditions and water quality standards. The applicant or their consultant shall submit any requested information deemed necessary by the Department of Natural Resources to ensure compliance with WQC conditions.

13. After avoidance and minimization for the project, all unavoidable, adverse impacts shall be mitigated appropriately based on type and extent of impact.
    a. Mitigation for loss of aquatic resources shall be in conformance with the currently approved "Missouri Stream Mitigation Method" and/or other mitigation guidance approved for use in Missouri. Mitigation guidance documents can be located online at www.nwk.usace.army.mil/Missions/RegulatoryBranch/StateofMissouri.
    b. Mitigation shall be within the state of Missouri.
    c. The applicant shall comply with the higher value of compensatory mitigation required by either the Department of Natural Resources or the USACE, but not both unless explicitly noted.
    d. Stream impacts shall require compensatory mitigation with only in-stream or riparian corridor credits, unless the Department of Natural Resources agrees to an alternative.

14. Antidegradation requirements dictate all appropriate and reasonable Best Management Practices related to erosion and sediment control, project stabilization and prevention of water quality degradation are applied and maintained; for example, preserving vegetation, streambank stability and basic drainage. Best Management Practices shall be properly installed prior to conducting authorized activities and maintained, repaired and/or replaced as needed during all phases of the project to limit the amount of discharge of water contaminants to waters of the state. The project shall not involve more than normal stormwater or incidental loading of sediment caused by project activities so as to comply with Missouri's general water quality criteria [10 CSR 20-7.031(4); Page 15 at http://www.sos.mo.gov/cmsimages/adrules/csr/current/10csr/10c20-7a.pdf].

15. Channelization of streams is not allowed under this precertification:
    a. Channelization includes but is not limited to reducing the length of the channel, widening the channel for increased water storage or flow, and/or construction of hard structures which concentrate flow.
    b. Bank stabilization activities along one bank of a stream are permitted, including but not limited to, bank sloping and riprapping.
    c. The redirection of flow by excavation of the opposite bank or a streambed is considered a channel modification and is prohibited.

16. No new or expanded wet stormwater retention basins or similar impoundment structures may be constructed unless they are located off-channel. In-channel dry stormwater detention basins are allowable if the stream channel is either temporarily or not adversely affected by the basin.

17. Any waste concrete or concrete rinsate shall be disposed of in a manner that does not result in any discharge to the jurisdictional waterways.

SPECIFIC CONDITIONS

18. Nationwide Permit 3 *Maintenance*
    a. Silt, sediment and debris removal shall be limited to a maximum of 100 LF upstream and 100 LF downstream of structures.
    b. During dewatering, water shall not be returned directly to the water way but shall be pumped upland and filtered through an appropriate treatment device as prescribed in any existing separate permit authorizing the discharge of return water. If, however, instream flow is 1 cubic foot per second (cfs) or greater and the return rate is set at 1 cfs or less, return may be made directly to the stream.

19. Nationwide Permit 4 *Fish and Wildlife Harvesting, Enhancement, and Attraction Devices and Activities*
    Any inorganic or extraneous debris such as may be found on Christmas trees shall be removed to qualify as clean, nonpolluting fill.

20. Nationwide Permit 6 *Survey Activities*
    Water, fines and excavated materials displaced by activities such as borings, shall not be returned directly to the water way, but shall be pumped upland and filtered through an appropriate treatment device as prescribed in any existing separate permit authorizing the discharge of return water.

21. Nationwide Permit 7 *Outfall Structures and Associated Intake Structures*
    WQC does not replace or negate the need to obtain any required state permits under the Missouri Clean Water Law (Chapter 644, RSMo) for construction of wastewater treatment facility components including outfall structures; permits to release wastewater effluents; or for the construction of components related to public water supplies including intake structures as may be required by the Missouri Safe Drinking Water Law (Chapter 640, RSMo).

22. Nationwide Permit 12 *Utility Line Activities*
    a. For utility crossings that must disturb a water body, work shall be conducted in such a manner as to seal off the work area from flow and minimize sediment transport.
    b. Material resulting from activity may not be temporarily side-cast into waters of the state for more than one month.
    c. Directional boring to avoid impacts to waters of the state is recommended.
    d. Drilling mud and/or other materials shall not be discharged into waters of the state. Best Management Practices shall be implemented to prevent possible discharges from reaching waters of the state. In the event materials are inadvertently discharged to waters of the state, notification to the Department of Natural Resources is required within 24 hours by calling 573-522-4502. Restoration of the impacted water(s) may be required.
    e. Utility line crossings shall be placed as close to perpendicular as possible, and be limited to a maximum crossing length of no more than one and one-half times the width of the stream.
    f. New utilities lines, when considering the project as a whole, which (1) Cross more than one jurisdictional water resulting in greater than 500 LF and/or 0.50 acre of impact to jurisdictional waters as a project total, and (2) Travel through more than two county jurisdictions or more than one state jurisdiction shall be viewed as a whole project in the WQC process and require individual WQC of all crossings, except crossings utilizing directional boring.

23. Nationwide Permit 13 *Bank Stabilization*
    Innovative stabilization approaches require consultation with the Department of Natural Resources prior to approval and may require an individual WQC. The permittee shall invite the USACE and the Department of Natural Resources as well as the other state and federal resource agencies to examine innovative approaches.

24. Nationwide Permit 14 *Linear Transportation Projects*
    a. The permittee must propose and employ measures to mitigate the removal of impounded sediment (e.g., sand, gravel) in the unstable area upstream of a proposed project to prevent it from being transported downstream and/or construct a notched weir to slow the release of impounded sediment from upstream of the proposed project. Accumulated gravel may be allowed to naturally deposit into downstream plunge pool voids. Consultation with a hydrologist or other scientist is recommended if the amount of accumulated unconsolidated gravel exceeds the volume of plunge pool voids.
    b. Where this NWP is used to authorize bridge and culvert structures, stream channel work is limited to a maximum of 100 feet upstream and a maximum of 100 feet downstream of the bridge or culvert. For purposes of this condition, a channel modification is any activity that alters the width, depth, length and/or sinuosity of a water way.

25. Nationwide Permit 16 *Return Water from Upland Contained Disposal Areas*
    These activities could have specific tasks or processes involved which may require the acquisition of separate general or site specific permits. All applicants shall contact the Department of Natural Resources' Water Protection Program at 573-522-4502 to determine any specific requirements which may or may not require an individual WQC.

26. Nationwide Permit 19 *Minor Dredging*
    These activities could have specific tasks or processes involved which may require the acquisition of separate general or site specific permits. All applicants shall contact the Department of Natural Resources' Water Protection Program at 573-522-4502 to determine any specific requirements which may or may not require an individual WQC.

27. Nationwide Permit 20 *Response Operations for Oil and Hazardous Substances*
    a. These activities could have specific tasks or processes involved which may require the acquisition of separate general or site specific permits. All applicants shall contact the Department of Natural Resources' Water Protection Program at 573-522-4502 to determine any specific requirements which may or may not require an individual WQC.
    b. Oil and hazardous substance releases are to be reported to the Department of Natural Resources' Environmental Emergency Response number at 573-634-2436. Continue to report updates with regard to the containment and cleanup of releases.

28. Nationwide Permit 22 *Removal of Vessels*
    Use of this NWP in Missouri is limited to removal actions only and shall not be used for any disposal of vessel.

29. Nationwide Permit 33 *Temporary Construction, Access and Dewatering*
    a. The use of this NWP shall be limited to impacts of six months or less in duration.
    b. Any removal of accumulated sediment (e.g., sand, gravel) upstream of a proposed project shall be limited to the quantity necessary to relieve any obstruction or to protect downstream habitat. The permittee must propose and employ measures to mitigate the removal of impounded sediment in the unstable area upstream of a proposed project to prevent it from being transported downstream and/or construct a notched weir to slow the release of impounded sediment from upstream of the proposed project.

30. Nationwide Permit 41 *Reshaping Existing Drainage Ditches*
    a. Material from the reshaping activities shall not be side-cast into any jurisdictional waters.
    b. Removal of vegetation shall be the minimum necessary to conduct approved activity except for the removal of invasive or noxious species. The Department of Natural Resources encourages deep-rooted vegetation to be maintained on at least one side of the water way to protect water quality; for example, leaving trees on the west side to prevent temperature exceedances in the water way.

31. Nationwide Permit 42 *Recreational Facilities*
    The vegetated riparian buffer strip to be maintained from the high bank on either side of the jurisdictional channel may be used in part for the construction of public recreational trails, including those constructed to standards set by the Americans with Disabilities Act (ADA).

32. Nationwide Permit 53 *Removal of Low-Head Dams*
    a. The permittee must propose and employ measures to mitigate the removal of impounded sediment (e.g., sand, gravel) in the unstable area upstream of a proposed project to prevent it from being transported downstream and/or construct a notched weir to slow the release of impounded sediment from upstream of the proposed project. Accumulated gravel may be allowed to naturally deposit into downstream plunge pool voids. Consultation with a hydrologist or other scientist is recommended if the amount of accumulated unconsolidated gravel exceeds the volume of plunge pool voids.
    b. Stream channel work is limited to a maximum of 100 feet upstream and a maximum of 100 feet downstream of the dam.
    c. Restoration of the stream channel to its former, natural state is authorized. Individual WQC is required for non-natural channel modifications. For purposes of this condition, a channel modification is any activity that alters the width, depth, length and/or sinuosity of a water way.

33. Nationwide Permit 54 *Living Shorelines*
    Innovative stabilization approaches require consultation with the Department of Natural Resources prior to approval and may require an individual WQC. Invite the USACE and the Department of Natural Resources as well as the other state and federal resource agencies to examine innovative approaches.

Applications for WQC should be sent to the Department of Natural Resources, Water Protection Program, P.O. Box 176, Jefferson City, MO 65102-0176, or electronically to wpsc401cert@dnr.mo.gov. A complete application consists of the application submitted to the USACE as well as additional information necessary for a complete review of the project. This may include but is not limited to topographical maps, locational maps, engineering plans, project diagrams and where applicable mitigation plans [Section 644.026.26, RSMo and 10 CSR 20-6.060(5)].

An issued WQC becomes part of and expires with the Section 404 and/or Section 10 permit unless explicitly stated in the WQC. Consultation with the Department of Natural Resources is required should the permit require modification. Not all permit modifications require the WQC to be modified or reissued. For example when a permit expiration date is extended or the permit is reissued and there are no changes to the original project or water quality standards, the WQC may remain valid for that project.

The Department of Natural Resources encourages, but does not require the permittee to consider environmentally-friendly design techniques to include stormwater management strategies that maintain or restore the original site hydrology through infiltration, evaporation or reuse of stormwater. Designs might include creating vegetated swales or rain gardens, or using porous pavement. More information can be found at these websites: www.epa.gov/owow/NPS/lid/ and www.lid-stormwater.net/lid_techniques.htm.

The Department of Natural Resources encourages the use of native vegetation to protect impacted areas from future water quality concerns. Native vegetation has evolved with Missouri's geology, climate and wildlife to occur within a region as a result of natural processes rather than human intervention. For areas where direct impacts to streams are to be avoided, the Department of Natural Resources recommends a minimum riparian buffer strip width of 50 feet as measured from top of bank.

The following publication provides guidance on how to protect water quality through Best Management Practices on project sites. For more information, please read: "Protecting Water Quality: A field guide to erosion, sediment and stormwater best management practices for development sites in Missouri and Kansas" dated January 2011 and located online at http://dnr.mo.gov/env/wpp/wpcp-guide.htm.

To help determine if a proposed activity could encounter species or sites of conservation concern within or near a project, including those that have not been recorded, the applicant is encouraged to visit:

- Missouri Department of Conservation's "Natural Heritage Review" website at https://naturalheritagereview.mdc.mo.gov/, and
- U.S. Fish and Wildlife Service's "Information, Planning and Conservation" website at http://ecos.fws.gov/ipac/.

If the proposed project encounters and will potentially affect a species of concern, please report it to the Missouri Department of Conservation and the U.S. Fish and Wildlife Service.

For more information
Missouri Department of Natural Resources
Water Protection Program
P.O. Box 176
Jefferson City, MO 65102-0176
wpsc401cert@dnr.mo.gov
800-361-4827 or 573-522-4502
http://www.dnr.mo.gov/env/wpp

US Army Corps
of Engineers
Kansas City District

STATE OF MISSOURI
NATIONWIDE PERMIT REGIONAL CONDITIONS

For All Nationwide Permits

1. Stream Crossings. In addition to requirements of General Condition 2 and General Condition 9 of the Nationwide Permits, the following guidelines for stream crossings apply for regulated activities in waters of the United States. The guidelines are available at: https://usace.contentdm.oclc.org/utils/getfile/collection/p16021coll11/id/2654

- Corps Districts may waive Regional Condition 1 when project site geomorphology (i.e. bedrock, gradient) or existing alterations (i.e. adjacent impoundment, as part of a dry detention basin) creates conflict with the guidelines. The applicant must provide preconstruction notification to the District Engineer for any waiver request.

2. Seasonal Restrictions for Activities Proposed in Spawning Areas. In addition to the requirements of General Condition 3 of the Nationwide Permits, the following specific seasonal restrictions apply for regulated activities in waters of the United States. Between the closed dates listed in the Missouri Combined Stream Spawning List, the permittee must not excavate from or discharge into the listed waters. The list of waters with seasonal restrictions is available on request from the Corps or at: https://usace.contentdm.oclc.org/utils/getfile/collection/p16021coll11/id/2656

- Corps Districts may waive Regional Condition 2 when the applicant demonstrates imminent threats to public safety and health, or to property. The Corps will consult with the U.S. Fish and Wildlife Service and Missouri Department of Conservation before granting the waiver and may add additional special conditions to protect aquatic life during the operation. The applicant must provide preconstruction notification to the District Engineer for any waiver request.

3. Invasive and Exotic Species. Plant species listed at: https://usace.contentdm.oclc.org/utils/getfile/collection/p16021coll11/id/2655 shall not be used for revegetation unless this requirement is waived by the district engineer based on a case specific analysis of the revegetation plan. Best management practices should be used to reduce the risk of transferring invasive plant and animal species to or from the project site. Best management practices can be found at: http://www.invasivespeciesinfo.gov/toolkit/prevention.shtml. Known zebra mussel waters within Missouri can be found at: https://huntfish.mdc.mo.gov/sites/default/files/downloads/zebraapril2013_0.pdf

4. Suitable Material. In addition to the specific examples in General Condition 6 of the Nationwide Permits, the following materials are not suitable for fill activities in waters of the United States: vehicle bodies, construction or demolition debris, asphalt in any form, garbage, tires, treated lumber products that do not comply with the Registration Documents issued by the U.S. Environmental Protection Agency (USEPA) under the Federal Insecticide, Fungicide and Rodenticide Act (FIFRA) and that are not in accordance with standards issued by American Wood Protection Association of the International Code Council, liquid concrete not poured into forms, grouted riprap, bagged cement and sewage or organic waste.

Broken concrete used as bank stabilization must be reasonably well graded, consisting of pieces varying in size from 20 pounds up to and including at least 150 pound pieces to withstand expected high flows. Applicants must break all large slabs to conform to the well graded requirement. Generally, the maximum weight of any piece should not be more than 500 pounds. Gravel and dirt should not exceed 15% of the total fill volume when using broken concrete as fill. All protruding reinforcement rods, trash, asphalt, and other extraneous materials must be removed from the broken concrete prior to placement in waters of the United States.

5. Priority Watersheds. The applicant must provide preconstruction notification to the District Engineer for any regulated activity in a priority watershed. The list of priority watersheds requiring notification is available on request from the Corps or at:
https://usace.contentdm.oclc.org/utils/getfile/collection/p16021coll11/id/2652

6. Special Aquatic Resources. The applicant must provide preconstruction notification to the District Engineer for any regulated activity which may impact a jurisdictional fen, seep or bog of any size.

7. Sensitive Aquatic Species. The applicant must provide preconstruction notification to the District Engineer for any regulated activity in waters listed at:
https://usace.contentdm.oclc.org/utils/getfile/collection/p16021coll11/id/2657
The submitted preconstruction notification will be coordinated in accordance with General Condition 32(d) with the U.S. Fish and Wildlife Service as determined appropriate by the Corps.

For Specific Nationwide Permits:

8. NWP 12 – Utility Line Activities. The applicant must provide preconstruction notification to the District Engineer prior to commencing the activity if the discharge is in a special aquatic site or when new utility line construction activities have multiple crossings of the same stream and/or parallel a stream. The preconstruction notification must include a revegetation plan for impacted wetlands and riparian areas in accordance with Regional Condition 3. Where preconstruction notification is required for utility line activities within streams, the submittal must include site-specific plans for the stabilization of disturbed channel bed and bank areas.

9. NWP 23 – Approved Categorical Exclusions. The applicant must provide preconstruction notification to the District Engineer for all regulated Nationwide Permit 23 activities in waters of the United States. In addition to information required by General Condition 32, the applicant must identify the approved categorical exclusion that applies and provide documentation that the project fits the categorical exclusion.

10. NWP 27 – Stream and Wetland Restoration Activities. The applicant must provide preconstruction notification to the District Engineer prior to commencing the activity if the discharge is associated with impacts to forested wetlands.

11. NWP 44 – Mining Activities. Nationwide Permit 44 cannot be used to authorize in-stream mining projects, including in-stream sand and gravel mining operations.

12. Requirements for Waiver of 300 Linear Foot Limit Associated with NWPs 21, 29, 39, 40, 42, 43, 44, 50, 51 and 52 and all Waiver Limits Associated with NWP 13. Waiver considerations for NWP 13 include activities in excess of 500 linear feet, fills greater than one cubic yard per running foot, or involve discharge of dredged or fill material into special aquatic sites. The applicant must request the waiver in writing and provide documentation and environmentally based reasons to support the waiver request in accordance with the requirements of General Condition 32(d) for making waiver determinations.

13. Lake of the Ozarks: The applicant must provide a preconstruction notification to the District Engineer for any regulated activity associated with Nationwide Permits 3, 7, 12, 14, 15, 18, 22, 27, 33 and 45 within Lake of the Ozarks. A copy of this notification must also concurrently be sent to Ameren Missouri. Nationwide Permits 2, 13, 16, 19, 25, 29, 31, 35, 36, 39, 41 and 44 are revoked in the Lake of the Ozarks. NWPs 1, 9, 10, 11 and 28 are only valid when both Ameren Missouri and the Missouri State Water Patrol have approved the activity. The Corps and Ameren Missouri, regardless of the request to use any Nationwide Permit, may verify the activity under the provisions of Regional General Permit 38M https://usace.contentdm.oclc.org/utils/getfile/collection/p16021coll7/id/7726. Additional information on Ameren Missouri and Lake of the Ozarks permit requirements can be found at the following webpage: https://www.ameren.com/missouri/lake-of-the-ozarks.

Note: Preconstruction Notification to the District Engineer must be in accordance with General Condition 32 of the Nationwide Permits.

APPENDIX E:

MISSOURI AMERICAN WATER
WATER PIPELINE TECHNICAL SPECIFICATIONS
AND STANDARD DETAILS

Water Pipeline Technical Specifications

MISSOURI AMERICAN WATER

Prepared by:

MISSOURI AMERICAN WATER COMPANY

727 Craig Road
St. Louis, Missouri 63141

SPECIFICATIONS
TABLE OF CONTENTS

The Specifications have been subdivided into Divisions and Sections in accordance with the UNIFORM CONSTRUCTION INDEX of the Construction Specifications Institute.

TITLE	PAGE	REVISION
DIVISION 1 – GENERAL REQUIREMENTS		
Section 01000 – Summary of Work	01000-1 to 01000-3	11/30/2018
Section 01010 – Drawing Index	01010-1 to 01010-2	11/30/2018
Section 01011 – Specifications Special Conditions	01011-1 to 01011-12	11/30/2018
Section 01075 – Basis of Payment	01075-1 to 01075-8	11/30/2018
Section 01300 – Submittals	01300-1 to 01300-8	11/30/2018
Section 01500 – Temporary Facilities	01500-1 to 01500-2	02/02/2009
Section 01570 – Traffic Regulation	01570-1 to 01570-3	02/02/2009
Section 01600 – Products	01600-1 to 01600-4	02/02/2009
Section 01700 – Project Closeout	01700-1 to 01700-3	02/02/2009
DIVISION 2 – SITE WORK		
Section 02020 – Dewatering	02020-1	02/02/2009
Section 02025 – Existing Utilities & Structures	02025-1 to 02025-4	11/30/2018
Section 02105 – Clearing and Grubbing	02105-1 to 02105-2	02/02/2009
Section 02210 – Trenching, Backfilling and Compacting	02210-1 to0 2210-10	11/30/2018
Section 02220 – Casing Installation	02220-1 to 02220-4	11/30/2018
Section 02230 – Stream Crossing	02230-1 to 02230-2	02/02/2009
Section 02540 – Erosion and Sedimentation Control	02540-1	02/02/2009
Section 02558 – Identification Location Guide	02558-1 to 02558-2	11/30/2018
Section 02610 – Paving and Surfacing	02610-1 to 02610-2	02/02/2009
Section 02614 – Concrete Curbs, Drives and Sidewalks	02614-1 to 02614-3	02/02/2009
Section 02820 – Lawn Restoration	02820-1 to0 2820-3	02/02/2009
DIVISION 3 – CONCRETE		
Section 03300 – Cast-In-Place Concrete	03300-1 to 03300-4	02/02/2009
Section 03450 – Precast Concrete & Vaults Manhole	03450-1 to 03450-2	02/02/2009
DIVISION 15 – MECHANICAL		
Section 15000 – Piping – General Provision	15000-1 to 15000-7	11/30/2018
Section 15020 – Disinfecting Pipelines	15020-1 to 15020-8	11/30/2018
Section 15025 – Cleaning Pipelines	15025-1 to 15025-5	02/02/2009

Section 15030 – Pressure and Leakage Tests	15030-1 to 15030-3	11/30/2018
Section 15105 – Ductile Iron Pipe and Fittings (Owner Furnished)	15105-1 to 15105-3	02/02/2009
Section 15106 – Ductile Iron Pipe and Fittings (Contractor Furnished)	15106-1 to 15106-8	11/30/2018
Section 15120 – Polyvinyl Chloride (PVC) Pipe (Owner Furnished)	15120-1 to 15120-4	11/30/2018
Section 15121 – Polyvinyl Chloride (PVC) Pipe (Contractor Furnished)	15121-1 to 15121-5	11/30/2018
Section 15125 – High Density Polyethylene (HDPE) Pipe and Fittings for Water and Wastewater Mains (Contractor Furnished)	15125-1 to 15125-8	11/30/2018
Section 15130 – Piping Specialties (Owner Furnished)	15130-1 to 15130-3	02/02/2009
Section 15131 – Piping Specialties (Contractor Furnished)	15131-1 to 15131-6	11/30/2018
Section 15150 – Gate Valves (Owner Furnished)	15150-1	11/30/2018
Section 15151 – Gate Valves (Contractor Furnished)	15151-1 to 15151-2	11/30/2018
Section 15154 – Butterfly Valve (Owner Furnished)	15154-1	11/30/2018
Section 15155 – Butterfly Valve (Contractor Furnished)	15155-1 to 15155-2	11/30/2018
Section 15170 – Tapping Sleeves, Saddles and Valves (Owner Furnished)	15170-1	11/30/2018
Section 15171 – Tapping Sleeves, Saddles and Valves (Contractor Furnished)	15171-1 to 15171-5	11/30/2018
Section 15180 - Fire Hydrants (Owner Furnished)	15180-1 to 15180-3	11/30/2018
Section 15181 – Fire Hydrants (Contractor Furnished)	15181-1 to 15181-3	11/30/2018
Section 15185 – Abandonment of Mains	15185-1 to 15185-2	11/30/2018
Section 15191 – Air Release and Blow-Off Outlets (Contractor Furnished)	15191-1 to 15191-4	11/30/2018
Section 15200 – Service Lines (Contractor Furnished)	15200-1 to 15200-4	11/30/2018
Section 15205 – Service Lines (Owner Furnished)	15205-1 to 15205-3	11/30/2018

SECTION 01000

SUMMARY OF WORK

PART 1: GENERAL

1.01 WORK UNDER THIS CONTRACT

A. Furnish all labor, materials (except as herein noted), equipment and means to construct the pipeline(s) and other Work as described in the Contract Documents and shown on the Drawings. The Work includes, but is not limited to, the following:

1. Pavement removal, including saw cutting, as required.
2. Construction and maintenance of bridges and other structures as required for traffic control.
3. Furnishing of flagmen, traffic warning and control as required.
4. Sheeting, bracing and support of trench and adjoining ground where necessary.
5. Furnish and install thrust blocking and pipe restraint as required.
6. Handling drainage and water removal.
7. Guarding the site and materials.
8. Unloading, loading, hauling, distributing, laying and testing the pipe and appurtenances.
9. Furnishing materials not provided by the owner to the site (see section 1.03).
10. Rearranging sewer lateral and other pipes and ducts where necessary.
11. Excavation and backfilling of trenches and pits.
12. Restoration of paved and concrete surfaces including curbing.
13. Removal of surplus excavated material and debris.
14. Installation of required pipe, fittings and appurtenances
15. Performance of pressure and leakage tests.
16. Disinfecting (and dechlorination) of pipeline.
17. Site cleaning.
18. Maintenance of street or other surfaces for the required period of time.
19. Ground restoration and planting.
20. Submit schedules, shop drawings and as-built records.
21. Erosion and sediment control.
22. Flush & Clean
23. Call for locates

B. Please refer to the Standard General Conditions of the Construction Contract for definitions of the Owner, Contractor, Engineer and other terminology that may be used in this specification.

C. The above general outline of principal features does not in any way limit the responsibility of the Contractor to perform all Work and furnish the required materials, equipment, labor and means as shown or required by the Contract Documents.

D. Materials, equipment, labor, etc., obviously a part of the Work and necessary for the proper operation and installation of same, although not specifically indicated in the Contract Documents, shall be provided as if called for in detail without additional cost to the Owner.

1.02 WORK BY OWNER

A. Owner or the Owner's Resident Project Representative (RPR) shall perform certain items of Work related to this project which include the following

1. Mark locations of existing services, valves, mains, etc.
2. Other work, if any, as described below.
    A. Operate all existing valves necessary to shut-off, flush and reactivate the existing pipelines
    B. Install meters
    C. Perform flushing (use of existing hydrants)
    D. Collect bacteriological samples

B. Owner shall transfer any lead service lines that are encountered during the work.
C. See Section 01011 Specifications Special Conditions for appropriate list of tasks provided by owner.

1.03 MATERIALS FURNISHED BY OWNER

A. The following materials shall be furnished by the Owner. All materials required to complete the Work, but not listed herein, shall be furnished and installed by the Contractor.
    1. water meters

B. See Section 01011 Specifications Special Conditions for appropriate list of materials furnished by owner.

1.04 LOCATIONS

A. Work is to be performed on Owner's property and/or public rights-of-ways or easements shown on the drawings and described in the Specifications. Work shall be performed by the Contractor within these limits.

B. It is the obligation and responsibility of the Contractor to determine the exact limitations of the rights-of-way and/or easements and any conditions limiting or affecting the use of the right of way by the Owner and/or the Contractor. All agreements respecting rights-of-way and the easements that are available to the Owner can be made available upon request. The Contractor agrees to indemnify and hold harmless the Owner against any claims made by any property owner, including any claim that the Contractor has failed to keep Contractor work, equipment, materials, or workmen within the limits authorized by the right-of-way and/or easement or any claim that the Contractor has failed to comply with any condition or requirement, or agreement respecting the right-of-way and/or easement.

C. Some of the locations shown or described in the Contract Documents, such as tie-ins, are approximate and it is the responsibility of the contractor for pinpointing the exact locations.

PART 2: PRODUCTS

2.01 GENERAL

Specifications for the materials and equipment to be provided by the Contractor are detailed in the respective Specification Sections.

PART 3: EXECUTION

3.01 FIELD SURVEY WORK

Lay out the Work in accordance with Paragraph 4.4 of the General Conditions. Owner will provide reference points as noted on the plans.

3.02 COORDINATION

A. Coordinate work, to phase the construction operations, and provide, install and maintain any temporary connections necessary to prevent interference to operation of Owner's facilities. Any construction work requiring the shutdown of facilities must be scheduled and performed only at such times as shall be authorized by the Owner. Such Work must be completed during the specific periods authorized by the Owner.

B. It may be necessary that Work will be performed during several shutdown periods and/or during periods of premium time payment to accomplish the desired construction. All costs to perform the Contractor's Work, including premium time payments, shall be borne by the Contractor and are included in the Contract Price.

3.03 REGULATORY REQUIREMENTS

Make necessary arrangements for obtaining and identifying all costs in connection with mandated third party inspections in accordance with Paragraph 13.5 of the General Conditions when the Work is to be done in the third party's transportation or utility right of way and an inspector must be assigned to the Project during the construction of the Work.

END OF SECTION

SECTION 1010

DRAWING INDEX

PART 1: GENERAL

1.01 DRAWINGS

A. Project specific drawings are listed in the Contract Documents or shall be listed in a Task Order.

B. The following standard detail drawings supplement the specifications and project specific drawings:

Sheet No.	*Title, Description*	*Revision*
0201-0601-SD01	Blowoff/ Flushing Hydrant Assembly Detail	11/30/2018
0201-0601-SD02	HDPE Transition (Option)	11/30/2018
0201-0601-SD04	HDPE Transition (Thrust Restraint)	11/30/2018
0201-0601-SD06	Thrust Block Details	09/16/2011
0201-0601-SD08	Dead-End PVC or Dip Blocking Method Detail	11/30/2018
0201-0601-SD12	Pre-Fabricated Steel Reinforced Concrete Blocking Pad Detail	11/13/2008
0201-0601-SD14	Cross Block Side View Detail	01/13/2012
0201-0601-SD15	Reducer Thrust Block Detail	11/13/2008
0201-0601-SD17	Thrust Block at Horizontal Bends 6” or Less Detail	11/13/2008
0201-0601-SD18	Ditch Check For Slopes Greater Than 3.5:1 Detail	09/16/2011
0201-0601-SD19	Thrust Block at Horizontal Bends (Less than 3 ft in thickness) Detail	09/16/2011
0201-0601-SD20	Thrust Block at Horizontal Bends (Exceeding 3 ft in thickness) Detail	09/16/2011
0201-0601-SD22	Placement of Anode Bag Test Station and Lead Wires Detail	01/13/2012
0201-0601-SD23	Cathodic Protection with PVC Pipe 12” and Smaller Detail	11/13/2008
0201-0601-SD24	Test Station Connections Detail	02/27/2009
0201-0601-SD25	Continuity Bonds for Push-on Ductile Iron Pipe Detail	11/13/2008
0201-0601-SD26	Exothermic Weld Connection Detail	11/13/2008
0201-0601-SD32	Pipe Curve Geometry Detail	11/13/2008
0201-0601-SD34	Fire Hydrant Protection Pipe Bollard Detail	11/13/2008
0201-0601-SD35	Fire Hydrant Detail	11/07/2017
0201-0601-SD45	Casing Installation Detail	11/13/2008
0201-0601-SD46	Protection of Water Supplies in Cul-De-Sacs Details	09/16/2011
0201-0601-SD47	¾”-1” Water Service Line Installation-Layout	03/12/2018
0201-0601-SD49	Tap Detail	01/13/2012
0201-0601-SD50	1-1/2” and 2” Service Lines Detail	11/13/2008
0201-0601-SD52	Patent Tap Excavation Requirements Detail	11/13/2008
0201-0601-SD53	Pipe Trench Terminology Detail	11/13/2008
0201-0601-SD54	Trench – PVC Pipe in Rock/ Soil Detail	11/30/2018
0201-0601-SD55	Trench - D.I. Pipe in Soil Detail	11/30/2018
0201-0601-SD56	Trench – D.I. Pipe in Rock Detail	11/30/2018
0201-0601-SD59	Valve Box Installation Detail	11/13/2008
0201-0601-SD67	Temporary Straw Bale Sediment Barrier Details	11/13/2008

0201-0601-SD68	Silt Fence Detail	02/27/2009
0201-0601-SD69	Manual Air Release Valve Detail	11/30/2018
0201-0601-SD71	Automatic Combination Air Release/ Vacuum Valve Detail	11/30/2018

Stream crossing details not included with package sent out until Engineer designs crossing.

PART 2: PRODUCTS

Not Used

PART 3: EXECUTION

Not Used

END OF SECTION

SECTION 01011
SPECIFICATIONS SPECIAL CONDITIONS

Brunswick, Jefferson City, Joplin/Tri-Lakes, Mexico, Platte County, St. Charles, St. Joseph, St. Louis County, Warrensburg

This section clarifies requirements that are unique to individual Operations Districts of the Owner. The content of this section shall remove, replace, or supplement the requirements in other sections of the Specifications when the Contract is for work located within the individual Operations Districts as noted herein. **If any other article of this section suggests the use of any materials, means and methods but is excluded or modified in this Section 01011, this section shall have priority and shall supersede conflicting requirements in other sections.** If there are conflicts between the Contract Drawings provided and these Specifications, contact the Owner immediately for clarification.

Table of Contents

Article No.	Title	Page
SSC-1000	Summary of Work	SSC-2-4
SSC-15030	Pressure and Leakage Tests	SSC-5
SSC-15150	Gate Valves (Owner Furnished)	SSC-5
SSC-15151	Gate Valves (Contractor Furnished)	SSC-5
SSC-15154	Butterfly Valves (Owner Furnished)	SSC-6
SSC-15155	Butterfly Valves (Contractor Furnished)	SSC-6
SSC-15170	Tapping Sleeves, Saddles, and Valves (Owner Furnished)	SSC-6
SSC-15180	Fire Hydrants (Owner Furnished)	SSC-6-7
SSC-15181	Fire Hydrants (Contractor Furnished)	SSC-7-9
SSC-15191	Air Release, Blow-off Outlets (Contractor Furnished)	SSC-9-10
SSC-15200	Service Lines (Contractor Furnished)	SSC-10-11
SSC-15205	Service Lines (Owner Furnished)	SSC-11
SSC-0201-0601-SD1	Blow-Off/ Flushing Hydrant Assembly Detail	SSC-12
	Other	SSC-12

SSC-1000 – Summary of Work

Brunswick:

Add the following item E to the list of Work to be performed by OWNER as described in Specification Section 1000.1.02.A.2:

E. Install meters that are smaller than 2-inch diameter.

Jefferson City:

Add the following items E-G to the list of Work to be performed by OWNER as described in Specification Section 1000.1.02.A.2:

E. Install all taps on new and existing mains. This included developer main extensions and service transfer taps. This is for the labor and equipment to make the tap only. This does not include excavation or installation of the sleeve, saddle, or valve.
F. Install all meters.
G. Paint all public fire hydrants.

Add the following item 2 to the list of Materials Furnished by OWNER as described in Specification Section 1000.1.03.

2. Provide all public fire hydrants.

Joplin:

Add the following items E thru G to the list of Work to be performed by OWNER as described in Specification Section 1000.1.02.A.2:

E. Excavate all tap pits for all water main taps including new New Development main extensions, water main relocations and service transfers for all taps.
F. Install all tap sleeves, tap saddles, tap valves, corporation stop valves on all new and existing water mains including service transfers.
G. Perform the installation of all taps on new and existing mains.

Add the following items 2 and 3 to the list of Materials Furnished by OWNER as described in Specification Section 1000.1.03.A:

2. Tap valves, tap saddles, tap sleeves, and corporation stops for all taps.
3. All meter setters, meter vaults, meter pit piping, strainers, and all control valves for water service meters including pressure reducing valves, check valves, and other valves required for water service meters.

Mexico:

Add the following items E thru H to the list of Work to be performed by OWNER as described in Specification Section 1000.1.02.A.2:

E. Install all water meters. This is for the meter only.
F. Excavate tap pits for existing water main branch taps only. This does not include service transfer taps.
G. Install tap valves and tap sleeves and tap saddles that are equipped with mechanical joint outlets for existing water main branch taps only. This does not include service transfer taps.
H. Install all branch main taps on existing water mains. This does not include service transfer taps.

Add the following items 2 to the list of Materials Furnished by OWNER as described in Specification Section 1000.1.03.A:

2. Tap valves and tap sleeves and tap saddles that are equipped with mechanical joint outlets for existing water main branch taps only. This does not include service transfer tap materials.

Parkville:

Add the following item E to the list of Work to be performed by OWNER as described in Specification Section 1000.1.02.A.2:

E. Install water meters that are less than 2-inch diameter. This is for the meter only.

St. Charles:

Add the following item E to the list of Work to be performed by OWNER as described in Specification Section 1000.1.02.A.2:

E. Install all water meters, meter setters, yokes, strainers, meter control valves, pressure reducing valves, check valves, by-pass valves, meter pit piping, meter pits, and meter vaults. This is only for installation work related to water service meters. Includes meter transfers and excavation of the meter pit.

Add the following items 2 to the list of Materials Furnished by OWNER as described in Specification Section 1000.1.03.A:

2. All meter setters, meter vaults, meter pit piping, strainers, and all control valves for water service meters including pressure reducing valves, check valves, and other valves required for water service meters..

St. Joseph:

Add the following items E and F to the list of Work to be performed by OWNER as described in Specification Section 1000.1.02.A.2:

E. Install water meters that are 2-inch diameter or more. This is for the meter only.
F. Perform the installation of branch taps on existing water mains. This is to make the tap only. This does not include service transfer taps. This does not include the installation of the valve, sleeve, or saddle.

Add the following items 2 thru 4 to the list of Materials Furnished by OWNER as described in Specification Section 1000.1.03.A *Exclusion: the Owner shall not supply materials for New Development main extensions.*

2. Gate valves and butterfly valves.
3. Tap valves and tap sleeves and tap saddles that are equipped with mechanical joint outlets for branch water main taps only.
4. Provide all fire hydrants. *Note: The Contractor shall paint all fire hydrants.*

St. Louis County:

Add the following items E to the list of Work to be performed by OWNER as described in Specification Section 1000.1.02.A.2:

E. Perform the installation of branch taps on existing water mains for New Development main extensions only. This includes the installation of the tap valve and tap sleeve. This does not include the excavation of the tap pits.

Add the following items 2 to the list of Materials Furnished by OWNER as described in Specification Section 1000.1.03.A:

2. Tap valves and tap sleeves for New Development main extensions only.

Warrensburg:
Follow specification sections.

SSC-15030 – Pressure and Leakage Tests

Platte County and St. Joseph:

Remove paragraph A in Specifications Section 15030.3.02 and replace with the following:

A. Slowly fill each segregated section of pipeline with water ensuring that all air is expelled. Extreme care must be taken to ensure that all air is expelled during the filling of pipe. The line shall stand full of water for at least twenty-four hours prior to testing to allow all air to escape. If necessary, tap the main at points of highest elevation to expel air as the pipe is filled.

SSC-15150 - Gate Valves (Owner Furnished)

St. Joseph:

Remove paragraph A to Specifications Section 15150.2.01A and replace with the following

A. Small diameter gate valves and large diameter gate valves shall be **OPEN LEFT outside city limits and OPEN RIGHT in city limits**, verify with District exact open type before ordering.

SSC-15151 - Gate Valves (Contractor Furnished)

St. Joseph *for developer main extensions only:*

Remove paragraph C in Specifications Section 15151.2.01C and replace with the following

C. Gate valves shall be **OPEN LEFT outside city limits and OPEN RIGHT in city limits**, verify with District exact open type before ordering.

Remove paragraph E in Specifications Section 15151.2.01E and replace with the following

E. Acceptable manufacture is the Mueller Company only.

Remove paragraph B in Specifications Section 15151.2.02B and replace with the following

B. Gate valves shall be **OPEN LEFT outside city limits and OPEN RIGHT in city limits**, verify with District exact open type before ordering.

Remove paragraph F in Specifications Section 15151.2.02F and replace with the following

F. Acceptable manufacture is the Mueller Company only.

SSC-15154 - Butterfly Valves (Owner Furnished)

St. Joseph:

Remove paragraph A in Specifications Section 15154.2.01A and replace with the following

A. Butterfly valves shall be **OPEN LEFT outside city limits and OPEN RIGHT in city limits**, verify with District exact open type before ordering.

SSC-15155 - Butterfly Valves (Contractor Furnished)

St. Joseph *for developer main extensions only:*

Remove paragraph B in Specifications Section 15155.2.01B and replace with the following

B. Butterfly valves shall be **OPEN LEFT outside city limits and OPEN RIGHT in city limits**, verify with District exact open type before ordering.

Remove paragraph H in Specifications Section 15155.2.01H and replace with the following

H. Acceptable manufacture is Mueller Company (Henry Pratt Company Division only).

SSC-15170 - Tapping Sleeves, Saddles, and Valves (Owner Furnished)

Joplin, Mexico, St. Joseph, and St. Louis County
(See SSC-1000 Summary of Work)

SSC-15180 - Fire Hydrants (Owner Furnished)

Jefferson City
(See SSC-1000 Summary of Work)

St. Joseph
(See SSC-1000 Summary of Work)

Add the following paragraph B to Specifications Section 15180.3.04

B. Paint Scheme
   1. Bonnet colors:
      a. Safety Green – 12" and larger mains
      b. Safety Orange – 8" and 10" mains
      c. Safety Candy Apple Red – 6" or smaller mains
   2. Nozzle Caps
      a. Same color as body for loop connected mains.
      b. Silver for dead end mains.
   3. Body – White

SSC-15181 - Fire Hydrants (Contractor Furnished)

Brunswick:

Add the following paragraph B to Specifications Section 15181.3.04

B. Fire hydrants shall be painted red.

Joplin:
(Joplin/ Tri-Lakes uses two types of hydrants, one for Reddings Mill area and one for Joplin/ Tri-Lakes. The Contractor is required to verify with the Joplin or Tri-lakes District the exact hydrant type before ordering).

Remove the first sentence of paragraph B Specifications Section 15181.2.01 and replace with the following sentence:

All fire hydrants shall be **OPEN RIGHT** and be clearly marked on the top of the hydrant.

Add the following paragraph B to Specifications Section 15181.3.04

B. The Contractor shall verify with Joplin or Tri-Lakes District the hydrant color before ordering paint.

Mexico:

Remove paragraph C in Specifications Section 15181.2.01C and replace with the following

C. The number and sizes of hose nozzle outlets is two (2) bronze male threaded 2-5/8" hose outlet nozzles GA 6-311 and one (1) male threaded 3-1/2" pumper outlet nozzle GA NS.

Remove paragraph E of the Specifications Section 15181.2.01 and replace with the following:

E. Acceptable Manufacturer and model, subject to the specifications set forth, include:
- Mueller Super Centurion 250, Model A-423, 5 ¼" valve opening.

Platte County:
(The Contractor is required to verify with the Platte County District the exact hydrant type before ordering.)

Add the following paragraph B to Specifications Section 15181.3.04

B. Paint Scheme
1. Bonnet colors:
   a. Safety Green – 12" and larger mains
   b. Safety Orange – 8" and 10" mains
   c. Safety Candy Apple Red – 6" or smaller mains
2. Nozzle Caps
   a. Same color as body for loop connected mains.
   b. Gray for dead end mains.
3. Body – Safety Yellow

St. Charles:

Add the following paragraph B to Specifications Section 15181.3.04

B. All hydrants shall be factory painted yellow from the manufacture. The Contractor shall apply matching yellow touch-up paint in accordance to manufacture's recommendations after the hydrants have been installed and backfilled.

St. Joseph *for developer main extensions only:*

Remove paragraph C in Specifications Section 15181.2.01C and replace with the following

C. The number and sizes of hose nozzle outlets is two (2) bronze male threaded 2-1/2" hose outlet nozzles and one (1) male threaded Storz connection 4" pumper outlet nozzle. Threads shall be NST thread spec 096.

Remove paragraph E in Specifications Section 15181.2.01E and replace with the following

E. Acceptable Manufacturer and model, subject to the specifications set forth, include:
- Mueller Super Centurion 250, Model A-423, 5 ¼" valve opening.

Add the following paragraph B to Specifications Section 15181.3.04

B. Paint Scheme
1. Bonnet colors:
   a. Safety Green – 12" and larger mains
   b. Safety Orange – 8" and 10" mains
   c. Safety Candy Apple Red – 6" or smaller mains
2. Nozzle Caps
   a. Same color as body for loop connected mains.
   b. Silver for dead end mains.
3. Body – White

St. Louis County:

Remove paragraph E of the Specifications Section 15181.2.01 and replace with the following:

E. Acceptable Manufacturer and model, subject to the specifications set forth, include:
- Mueller Super Centurion 250, Model A-423, 5 ¼" valve opening.

Add the following paragraph B to Specifications Section 15181.3.04

B. All hydrants shall be painted yellow. Fire hydrant tops shall be painted according to local district requirements.

Warrensburg:

Remove paragraph E of the Specifications Section 15181.2.01 and replace with the following:

E. Acceptable Manufacturer and model, subject to the specifications set forth, include:
- US Pipe Metropolitan Model 250, Model 94, 5 ¼" valve opening

SSC-15191 - Air Release, Blow-off Outlets (Contractor Furnished)

St. Charles:

Remove the Specifications Section 15191.2.02 and replace with the following;

- Blow off assembly for underground applications shall be designed to fit within a 20" diameter meter tile. Meter tile shall have a 21" frame with a locking 12" cover Ford Type C or equivalent. In areas prone to cold weather they shall be self-draining and non-freezing. All working parts shall be serviceable from above with no digging

required. They shall be operated such that the device goes from full open to full close in a ¼ turn clockwise turn. Approved types of flushing hydrants are Tru-Flo Model TF 500 by the Kupferle Foundry or equal.

SSC-15200 – Service Lines (Contractor Furnished)

St Louis County and Mexico:

Remove Specification Section 15200.2.01 and replace with the following:

Copper pipe shall be Type K only, as specified, meeting the requirements of ASTM Standard B88. The pipe size (3/4", 1", 1-1/2", or 2") and type are to be determined by the Engineer.

St. Louis County:

Remove Specification Section 15200.2.02 *Note; Polyethylene service lines are not allowed.*

St Louis County and Mexico:

Add the following to Specification Section 15200.2.03 CORPORATION STOPS

AY McDonald part numbers and descriptions;
Corps

4111-107	3120	5/8 CORP STOP AWWA X SPT (Special Purpose Thread)
4112-107	3120	3/4 CORP STOP AWWA X SPT
4113-107	3120	1 CORP STOP AWWA X SPT

Insulators

4121-018	4755DBL	3/4 CPLG FLR x FFLR L/NUT
4121-19	4755DBL	1 CPLG FLR x FFLR L/NUT

Acceptable manufacturers:
- Mueller
- A.Y. McDonald

Add the following to Specification Section 15200.2.04 CURB STOPS

Mueller part numbers and descriptions;
Curb Stops

H15300	250	3/4" CURB STOP SOLID TEE HEAD
H15300	350	1" CURB STOP SOLID TEE HEAD

Acceptable manufacturer:
- Mueller

Add the following to Specification Section 15200.2.06 MISCELLANEOUS SERVICE LINE FITTINGS

Mueller part numbers and descriptions
Tapping Saddles for use on PVC pipe.
BR2-W1314 12x3/4 ¾" CC Threads
BR2-W0899 8x3/4 ¾" CC Threads
BR2-W0684 6x3/4 ¾"CC Threads

AY McDonald part numbers and descriptions;
Copper Corp Couplings (Tailpieces)
4120-134 4749 5/8 x 3/4 EIGHTH BEND SPT x FLR (Flare)
4120-135 4749 3/4 x 3/4 EIGHTH BEND SPT x FLR
4120-019 4749 3/4 x 1 EIGHTH BEND SPT x FLR

Copper Unions
4120-143 4756 3/4 TWO PART UNION FLR x FLR
4121-145 4756 1 TWO PART UNION FLR x FLR
Lead Pak Couplings
4180-014 4758-22-67 3/4 CPLG x XSTR
4180-13 4758-22-67 3/4 x 5/8 CPLG CTS x XSTR

Warrensburg:

Remove Specification Section 15200.3.04 and replace with the following:

- Polyethylene encasement or other protective wrap shall extend for a minimum clear distance of three (3) feet away from the main for both new and replacement service lines unless otherwise directed by the ENGINEER or OWNER.

SSC-15205 – Service Lines (Owner Furnished)

Joplin
(See SSC-1000 Summary of Work)

Warrensburg:

Remove Specification Section 15205.3.04 and replace with the following:

- Polyethylene encasement or other protective wrap shall extend for a minimum clear distance of three (3) feet away from the main for both new and replacement service lines unless otherwise directed by the ENGINEER or OWNER.

SSC-0201-0601-SD1 Blow-off/Flushing Hydrant Assembly Detail

St. Charles:

The curb valve shall not be installed. Backfill the inside of the meter tile with ¾ clean granular sufficiently to stabilize the flush assembly plumb and upright.

SSC-OTHER

All Counties:

- All tapping sleeves and saddles 2-inch thru 12-inch that are designed with a mechanical joint outlet shall be designed for a working pressure of 250 psi or more. Gate valves 2-inch thru 12-inch shall be designed for a differential pressure of 250 psi and an internal test pressure of 500 psi unless otherwise noted on the plans. Tapping sleeves and tapping saddles equipped with mechanical joint outlets shall be designed for an internal test pressure of 300psi.

Joplin:

- Minimum bury depth in Joplin is 36” for water mains.

SECTION 01075

BASIS OF PAYMENT

PART 1: GENERAL

1.01 SCOPE

Work to be performed under this Contract shall be paid for in accordance with the "Schedule of Prices" of the bid which may be as Contract Unit Prices per Section 1.02 or as a Lump Sum Pricing for Labor, Materials, Restoration, and Paving per the Owner.. The cost of labor, equipment, materials or work called for in the Specification, shown on the Drawings, or necessary for a complete and satisfactory installation, but which are not specifically mentioned in this Section shall be included in the appropriate pay item by the Contractor at no additional expenses to the Owner**.**

Missouri-American Water Company will operate all existing valves and newly installed tap valves and dead end connection valves as required by the local Missouri American Water District requirements, and perform the bacteriological analysis for the contractor. Water Quality Samples will be collected by a Missouri-American Water Company representative. The CONTRACTOR must have a representative present for each sample taken and also furnish any labor, equipment, materials, and traffic control.

1.02 PAYMENT ITEMS

The prices shown in the "Schedule of Prices" of the Bid include all costs to construct the pipeline (s) under this Contract. Final payment will be made on the in place measurement of items in accordance with their respective units installed.

1. Mobilization Line Charge

   a) Payment will be made at the Contract Unit Price per lump sum (LS) for the Mobilization Line Charge. The lump sum price bid for Mobilization is limited to a maximum of 5% of the Total Bid Price. The work shall consist of the assembling and setting up for the project, including but not limited to the Contractor**'**s general plant, including Contractor**'**s general offices, bonds, insurance, shops, plants, storage areas, temporary signs, sanitary and any other facilities, as required by the Specifications Section 1500 Temporary Facilities, and special requirements of the Contract, as well as by local or State Law and regulation. The cost of any other initial expense required for the start of work will be included in the item.

   b) Mobilization Line Charge will be payable to the Contractor whenever the Contractor shall have completed five percent (5%) of the work of the Contract. For the purposes of this item five percent (5%) of the work shall be considered completed based upon the total of payments earned, exclusive of the amount bid for this item, as shown on the monthly billing of the approximate quantities of work done.

2. Pipeline Installation-(Labor- Materials)

a) Water Main Pipe

Payment will be made at the Contract Unit Price per linear foot (LF) for each type and size of pipe, complete in place. The Contract Unit Price shall include the furnishing of all pipe material and pipe fittings (except where materials are furnished by the Owner), labor, equipment, and excavation to install water main and fittings. Included in this unit price is all utility locations, photo logging, excavating, shoring and bracing, pipe, pipe fittings, concrete thrust restraint blocking, polywrap, tracer wire, special gaskets, restrained joint gaskets, restrained gland rings, adapters, identification tape, native backfill, rough grading, clearing and grubbing, pressure testing, sterilizing, utility pole support, utility concrete supports (if necessary), and all other miscellaneous or incidental work to compete the project as specified in the contract documents and shown on the plans but not described under any other payment terms. Both push-on joint and restrained joint water mains shall be included on this item. Different types, i.e. restrained joint and size of water main shall have a separate unit price listed under numerical sub-terms (i.e. Item 1a1 24" D.I. TR-Flex, Item 1a2 20" D.I. Push On, Item 1a3 8" PVC 900 Push On).

NOTE:

- **Clearing and grubbing is included under this item.**
- **The actual number of lineal feet of water main will be measured for payment. The length of water main shall be measured from the point of beginning to the point of end without regard to the length of fittings and valves.**

3. Fittings (Labor – Materials)

a) All necessary fitting labor and materials will be incidental to the price of associated pipe labor and materials. No separate payment will be made for fitting labor and materials (except valve fittings).

4. Valve Installation (Labor – Materials)

a) Payment will be made at the Contract Unit Price per each (EA) for each new valve complete in place. Unit price shall include all labor, materials (except where materials are furnished by the Owner), valve fittings, restrained joint gaskets, restrained gland rings, adapters, accessories, excavation and native backfilling, valve box, tools all incidental work required to install each valve complete as shown on the drawings, as specified and necessary to make a complete and satisfactory installation.

5. Fire Hydrant Installation (Labor – Materials)

a) Fire Hydrant Installation: Payment will be made at the Contract Unit Price per each (EA) for fire hydrant installation. The Contract Unit Price shall include all labor, materials (except where materials are furnished by the Owner), excavation and native backfill, drainage area granular fill, tools, and incidental work required to install each hydrant and support blocking, and joint restraint as shown on the drawings, all as required by Specification Section 15181, as necessary to make a complete and satisfactory installation.

b) Fire Hydrant Removal: Payment will be made at the Contract Unit Price per each (EA) for fire hydrant removals. The Contract Unit Price shall include all labor, materials (except where materials are furnished by the Owner), excavation and native backfill, tools, and incidental work required to remove each hydrant as shown on the drawings to be removed.

c) Steel Pipe Bollard: Payment will be made at the Contract Unit Price per each (EA) for steel pipe bollard. The Contract Unit Price shall include all labor, materials (except where materials are furnished by the Owner), excavation and native backfill, tools, support concrete and incidental work required to install steel pipe bollards in locations designated by the Owner, all in accordance with Specification Section 15181-Fire Hydrants, and Standard Detail 0201-0601-SD34.

6. Casing Installation (Labor – Materials)

a) Payment will be made at the Contract Unit Price per lineal foot (LF) of casing installed by any of the methods described in and according to Specification Section 2220, Part 3.06. Location to be shown on the Drawings or as directed by the Owner. The Contract Unit Price shall include all casing pipe, end boots, spacer insulators, strapping, skids, specials, anchors, harnesses, etc. (except where furnished by Owner) as required by Specification Section 2220 or as necessary for a complete and satisfactory installation. In addition the Contract Unit Price shall include all excavation in soil, de-watering, native backfilling, installation of end caps, sheeting, bracing, shoring, temporary construction, safety measures and all as necessary for a complete and satisfactory installation. The Contract Unit Price will also include all measures required to protect roadways, railroad tracks and embankments from settlement or damage of any type. **DOES NOT INCLUDE THE WATER MAIN CARRIER PIPE.**

7. Concrete Placement (Labor – Materials)

a) Thrust Blocking. All necessary thrust/ reaction blocking will be incidental to the price of associated pipe labor and materials. No separate payment will be made for thrust/ reaction blocking. All cast in place concrete to conform to Specification Section 3300. This item does not include pavement concrete or pipe bollard concrete.

8. Air Release Valve Installation (Labor – Materials)

a) Payment will be made at the Contract Unit Price per each (EA) for each air release valve assembly installed, complete in place. Unit price shall include all labor, materials (except where materials are furnished by the Owner), excavation and native backfilling, tools, furnishing and installing manhole frames and covers, ladders, painting; the furnishing, installing and testing of all piping, valves, air valves, fittings, small piping and piping appurtenances and all incidental work required to construct each structure complete as shown on the drawings, as specified and necessary to make a complete and satisfactory installation and in accordance with Specification Section 15191.

9. Blow Off Assembly (Labor – Materials)

Payment will be made at the Contract Unit Price per each (EA) for Blow off assembly, complete in place. Contract Unit Price shall include all labor, materials (except where materials are furnished by the Owner), excavation and native backfilling, tools, and all incidental work required to construct each blow off assembly complete as shown on the design drawings, or as specified on drawing 0201-0601-SD1 to make a complete and satisfactory installation.

10. Service Line Transfer (Labor – Materials)

a) Payment will be made at the Contract Unit Price per each (EA) for the installation of each of the following:
   1. Service Transfers New and Renewal
   2. Short Side Service Line, New or Renewal
   3. Long Side Service Line, New or Renewal

All of the above include complete installation in place including permanent restoration. Service transfers include installation of corporation and connection of existing service line shall be either union or length of pipe and union. Short side service lines, new or renewal include complete installation of service line from corporation to curb stop/ property line and connection or re-connection of customers' line on outlet side of curb stop or at property line. This includes those services whose length are less than ½ the improved road width where services are on the same side of roadway as the main installation. Long side service lines, new or renewal include complete installation of service line from corporation to curb stop/ property line and connection or re-connection of customers' line on outlet side of curb stop/ property line. Includes those services whose length equal or exceed ½ of the improved road width where services are on the opposite side of roadway of the main installation. Curb stops will normally be installed in the tree space or at the property line as per local district requirements. All installations shall be in accordance with Specification Section 15200 or 15205. Payment will be made under only one bid item per water service.

b) Payment will be made at the Contract Unit Price per each (EA) for pothole investigation of existing water services as directed by the

Engineer. The Contract Unit Price shall include all labor, material, and equipment to conduct the investigation to determine water service line material and shall also include restoration of existing ground or pavement. Payment will be made under only one bid item per water service investigated.

11. Extra Depth Excavation

a) When required by site conditions and as directed by the Engineer/Owner, payment for excavation in soil deeper than specified limits will be made at the Contract Unit Price per cubic yard (CY) for extra excavation. The Contract Unit Price shall include all labor, materials, and equipment for the required excavation as directed. Normal trench dimensions to be in accordance with the requirements of Specification Section 2210, Part 3.05, Paragraph D and F.

12. Rock Excavation

a) When required by site conditions and as directed by the Engineer/Owner, payment for rock excavation will be made at the Contract Unit Price per cubic yard (CY) for the approved quantity of rock excavated. No payment will be made for excavation made outside the limits described in Specification Section 2210, Part 3.05, Paragraph D and F. Contract Unit Price shall include removal, hauling and proper disposal of all material. Rock is defined as per Specification Section 2210, Part 3.05, Paragraph B. For Directional Boring Jobs, payment will be made at the Contract Unit Price per Linear Foot (LF) of the boring in which rock or cobble is encountered which is approved by the engineer.

13. Aggregate Backfill

a) Payment will be made at the Contract Unit Price per Ton for the specified type of aggregate in place where required. No payment will be made for aggregate placed outside the maximum normal trench width as described in Specification Section 2210, Part 3.05, Paragraph D. If for any reason the trench width exceeds the maximum trench width defined in Paragraph D above, the Contractor shall provide the additional aggregate for bedding and backfilling at no cost to the Owner as described in Specification Section 2210, Part 3.05, Paragraph E. The Contract Unit Price shall also include the removal, hauling and proper disposal of all excavated material.

14. Flowable Backfill

a) Payment will be made at the Contract Unit Price per cubic yard (CY) of the specified psi class of flowable backfill in place where required. No payment will be made for flowable fill needed outside the maximum normal trench width as described in Specification Section 2210, Part 3.05, Paragraph D. If for any reason the trench width exceeds the maximum trench width defined in Section 2210, Part 3.05, Paragraph D, the Contractor shall provide the additional

flowable fill for backfilling at no cost to the Owner as described in Specification Section 2210, Part 3.05, Paragraph E. This pay item also includes the removal, hauling and proper disposal of all excavated material.

15. Permanent Pavement Restoration

    a) Payment will be made at the Contract Unit Price per square foot (SF) of trench permanently paved as required. The contract price will include the furnishing and installation of permanent pavement material in accordance with Specification Section 2610 or as otherwise required by Federal, State or Local Authorities. This bid item includes saw cutting, base preparation, base course, wearing course and striping, if required. Different pavement types, i.e. Concrete or Asphalt Street Paving, Driveway Paving, or Sidewalks shall have a separate unit price listed under numerical sub-terms.

16. Curb Restoration

    a) Payment will be made at the Contract Unit Price per linear foot (LF) for the type of curbing installed. The unit price shall include excavation, stone bedding, concrete, asphalt and finishing, backfilling, complete in place and conforming to the requirements of Specification Section 3300 and/or any municipal or state requirements that may apply. If both asphalt and concrete curbs are needed, then a separate unit price listed under numerical sub-terms.

17. Topsoil (minimum 4")

    a) Payment will be made at the Contract Unit Price per square foot (SF) of topsoil complete in place. All in accordance with the requirements of Specification Section 2820 Lawn Restoration. Unit price shall include all labor, materials, excavation and native backfilling, tools, and all incidental work required to install topsoil as shown on the drawings, as specified and necessary to make a complete and satisfactory installation.

18. Filter Fabric

    a) Payment will be made at the Contract Unit Price per square yard (SY) in place as directed by the Owner. The unit price will include the furnishing and installation of filter fabric as described in Specification Section 2210, Part 2.04. Payment will be made at the unit price per square yard of the installed contact surface of the filter fabric with the trench bottom and sides. Filter fabric required for fire hydrants is not included under this line item.

19. Seed & Straw

    a) Payment will be made at the Contract Unit Price per square foot (SF) for seed and straw complete in place, all in accordance with the requirements of the Specification Section 2820 Lawn Restoration. Unit

price shall include all labor, materials, tools, and all incidental work required in installing seed, straw and fertilizer as shown on the drawings, or as specified and necessary to make a complete and satisfactory installation.

20. Sod

    a) Payment will be made at the Contract Unit Price per square foot (SF) of sod, complete in place, all in accordance with the requirements of Specification Section 2820 Lawn Restoration. Unit price shall include all labor, materials, raking and grading, tools, and all incidental work required to install sod as shown on the drawings, or as specified and necessary to make a complete and satisfactory installation.

21. Marker Post (Labor – Materials)

    a) Payment will be made at the Contract Unit Price for each (EA) post installed in place as authorized by the Owner. The unit price will include all materials (except where materials are furnished by the Owner) and labor necessary for a complete installation in accordance with Specification Section 15000, Part 3.03 paragraph D.

22. Sediment Control

    a) Silt Fence: Payment will be made at the Contract Unit Price per lineal foot (LF) of silt fencing complete in place. All in accordance with the requirements of Specification Section 2540 Erosion and Sedimentation Control. Unit price shall include all labor, materials, raking and grading, tools all incidental work required to install, remove and restoration of silt fencing as shown on the drawings, as specified and necessary to make a complete and satisfactory installation.

    b) Straw Bales: Payment will be made at the Contract Unit Price per each (EA) for straw bale complete in place. All in accordance with the requirements of Specification Section 2540 Erosion and Sedimentation Control, Unit price shall include all labor, materials, raking and grading, tools all incidental work required to install, remove, and restoration of straw bales as shown on the drawings, as specified and necessary to make a complete and satisfactory installation.

23. Traffic Control

    a) Payment will be made at the Contract Unit Price lump sum (LS) for traffic control where required or directed by the Owner in accordance with the requirements of Specification Section 1570 Traffic Regulations. This pay item does not include Police Services.

24. Surveying, Staking, and Permitting

a) Payment will be made at the Contract Unit Price lump sum (LS) for pass through costs for required survey stakeout to establish right-of-way and property boundaries as well as any water company or other private easements.

b) Payment will be made at the Contract Unit Price lump sum (LS) for pass through costs associated with any required permit from a regulatory agency i.e. Federal, State, County, or Municipality.

c) This pay item does not include any agreement Contractor may make with a private landowner for the purposes of material or equipment storage. The cost of such agreements shall be at the sole responsibility of the contractor and no separate payment shall be made.

PART 2: PRODUCTS

Not Used

PART 3: EXECUTION

Not Used

END OF SECTION

SECTION 01300

SUBMITTALS

PART 1: GENERAL

1.01 CONSTRUCTION SCHEDULE

A. Prepare and submit detailed progress schedules, schedule of values and shop drawing and sample submittal schedules to the Engineer for approval in accordance with Paragraphs 2.6 and 2.9 of the General Conditions. The schedule shall be in bar graph form and shall include, as a minimum, the following separate activities:

1. Physical construction (identifying mobilization, demobilization, setup time, lags, etc.).
2. Issuance by Contractor of purchase orders for material and equipment and submittal of shop drawings and samples to the Engineer.
3. Review by Engineer for each submittal of samples and shop drawings. RPR MUST RECEIVE COPIES OF ALL SUBMITTALS. Unless otherwise approved by the Engineer, allow ten (10) working days for Engineer to review each submittal.
4. Fabrication time for materials and equipment.
5. Delivery of materials and equipment.
6. Installation of materials and equipment.
7. Testing, start-up and training for individual pieces of equipment or entire systems as appropriate.
8. Weather affected activities.
9. Outages or interruptions of Owner's facilities required to perform work.
10. Demolition or removal work under this Contract.

B. Activity durations shall represent the best estimate of elapsed time considering the scope of the Work involved in the activity and the resources planned for accomplishing the activity expressed in working days.

C. Activity descriptions shall clearly define the scope of work associated with each activity.

D. Detail the construction work schedule to an extent that progress can be readily monitored on a weekly basis. In general, the construction work shall be detailed such that no construction activity shall have duration greater than fifteen (15) work days. As a minimum, each activity shall be coded by:

1. Activity type (i.e., submittal, Engineer's review, material order material delivery, pilot hole drilling, well testing, development, etc.).
2. Responsibility (i.e., Contractor, subcontractor A, subcontractor B, Owner, Engineer, etc.).
3. Area (i.e., Pilot Wells, Production Wells, sitework, etc.).

E. Develop the construction schedule as necessary to properly control and manage the project. The above schedule development requirements are a minimum.

F. The preliminary progress schedule shall be submitted in a bar graph format and shall include, as a minimum, a graphic representation of all significant activities and events involved in the construction of the project. The graphic representation and statement must clearly depict and describe the sequence of activities planned by the Contractor, their interdependence and the times estimated to perform each activity**.**

1.02 FINALIZING SCHEDULES

A. Prepare to present and discuss at the preconstruction meeting, the schedules submitted in accordance with this specification. Unless additional information is required to be submitted by the Contractor, the Engineer will, within 15 working days of the preconstruction conference, provide comments to the Contractor. Then resubmit the affected schedules addressing the Engineer's comments.

B. Approval of the final schedules by the Engineer is advisory only and shall not relieve the Contractor of responsibility for accomplishing the work within the Contract Times. Omissions and errors in the approved schedule shall not excuse performance less than that required by the Contract. Approval by the Engineer in no way makes the Engineer an insurer of the success of those schedules or liable for time or cost overruns flowing from shortcomings in such schedules.

1.03 REQUIREMENTS FOR CONFORMING TO SCHEDULE

A. Take such steps as will be necessary to improve progress, if, in the opinion of the Engineer, the Contractor falls behind the progress schedule. Engineer may require Contractor to increase the number of shifts and/or overtime operations, days of work, and/or the amount of construction planned, and to submit for approval such supplementary schedule or schedules as may be deemed necessary to demonstrate the manner in which the agreed rate of progress will be regained, all without additional cost to the Owner. An updated cash flow schedule will be required in this occurrence and will be provided with the supplementary schedules referenced above.

1.04 UPDATING SCHEDULES

A. Submit to the Engineer monthly updates of the schedules required per this specification section. **Monthly progress meetings are a good time to receive this information. We can also require two week look ahead schedule.**

B. Progress and shop drawing schedule updates shall reflect the progress to date by providing actual start dates for activities started, actual finish dates for completed activities, and identifying out of sequence work, schedule logic changes and any circumstances or events impacting the current schedule. The updates shall also contain the Contractor's best estimate of the remaining duration for activities not complete as of the date of the update. All graphic presentations and other information required per the initial submittal of these schedules shall be provided with each update.

C. The cash flow schedules shall be updated to reflect any changes.

1.05 ADJUSTMENT OF PROGRESS SCHEDULE AND CONTRACT TIMES

A. If the Contractor desires to make changes in the method of operating which affect the approved progress schedule, notify the Engineer in writing stating what changes are proposed and the reason for the change. If the Engineer approves these changes, revise and submit for approval, without additional cost to the Owner, all of the affected portions of the schedule.

B. Shop drawings and samples which are not approved on the first submittal or within the schedule time shall be immediately rescheduled, as well as any work which fails to pass specified tests or has been rejected.

C. The Contract Times will be adjusted only for causes specified in the General Conditions. In the event the Contractor requests an adjustment of the Contract times, furnish such justification and supporting evidence as the Engineer may deem necessary for a determination as to whether the Contractor is entitled to an adjustment of Contract Times under the provisions of the General Conditions. The Engineer will, after receipt of such justification and supporting evidence, make findings of fact and will advise the Contractor in writing. If the Engineer finds that the Contractor is entitled to any adjustment of the Contract Times, the Engineer's determination as to the total number of days adjustment shall be based upon the currently approved progress schedule and on all data relevant to the adjustment. The Contractor acknowledges and agrees that actual delays in activities which, according to the progress schedule, do not affect the Contract completion date shown by the critical path in the schedule will not be the basis for an adjustment of Contract Times.

D. From time to time it may be necessary for the progress schedule and/or Contract Times to be adjusted by the Owner to reflect the effects of job conditions, weather, technical difficulties, strikes, unavoidable delays on the part of the Owner, and other unforeseeable conditions which may indicate schedule and/or Contract Times adjustments. Under such conditions, the Engineer shall direct the Contractor to reschedule the work and/or Contract Time to reflect the changed conditions. Revise the construction schedule accordingly. No additional compensation shall be made to the Contractor for such changes except as provided in the General Conditions. Unless otherwise directed, take all possible actions to minimize any extension to the Contract Times and any additional cost to the Owner.

1.06 CASH FLOW SCHEDULE

A. In addition to the Construction Schedule required above, submit to the Engineer, for approval, a Cash Flow Schedule. The Cash Flow Schedule shall show the amounts of money by months, which will be required to reimburse the Contractor for Work performed during each month of the Contract Time. The sum of all the monthly cash requirements shall equal the total price of the Contract. The monthly cash requirements shall be proportioned with the aid of the Construction Schedule.

B. The approved Cash Flow Schedule will be used by the Owner to program funds for progress payments to the Contractor. Monthly payments will be made to the Contractor in accordance with the Contract Agreement, but at no time will the

aggregate amount of payments exceed the accumulated amount of payments for the same period of the Cash Flow Schedule.

1.07 SHOP DRAWINGS

A. Promptly supply to the Engineer for approval, shop drawings with details and schedules for all items as noted in the Drawings and/or Specifications and/or required by the Engineer. Submittals are required for all equipment and materials to be installed on the job.

B. Five (5) copies of all drawings, schedules and brochures shall be submitted for approval. Black line prints, blue line prints or reproducible transparencies are required. Blueprints (white lines on a blue background) are not acceptable. Each submittal shall have the job name on it.

C. Submittals smaller than 8-1/2 by 11 inches shall be secured to paper 8-1/2 by 11 inches.

1.08 SAMPLES

When required by the Engineer or where noted in other Sections of these Specifications, samples of materials shall be submitted for approval.

1.09 PRE-CONSTRUCTION VIDEO/ELECTRONIC PHOTOS

A. Prior to mobilization at the site, furnish to the Engineer on DVD a video recording of all planned construction areas, material storage areas, areas adjacent to these areas, including but not limited to, streets, driveways, sidewalks, curbs, ditches, fencing, railing, visible utilities, retaining structures and adjacent building structures. The purpose of the video is to document existing conditions and to provide a fair measure of required restoration. Care should be taken to record all existing conditions which exhibit deterioration, imperfections, structural failures or situations that would be considered substandard. RPR should attend site video making with the Contractor.

B. The video shall be high quality, color and in an approved electronic format. Temporary lighting shall be provided as necessary to properly video areas where natural lighting is insufficient (indoors, shadows, etc.). The video shall include an audio soundtrack to provide the following information:

1. Detailed description of location being viewed referenced to Contract Drawings (i.e., well location, building designation, pipeline route etc.)
2. Direction (N, S, E, W, looking up, looking down, etc.) of camera view
3. Date, time, temperature, environmental conditions during recording.

Where required by Engineer, electronic photographs of specific location shall be provides to supplement the electronic video.

C. Any areas not readily visible by video/photo methods shall be described in detail. Unless otherwise approved by Engineer, video shall not be performed during

inclement weather or when the ground is covered partially or totally with snow, ice, leaves, etc.

D. As many recordings or photos as are necessary to satisfy the requirements of this section shall be prepared. The original documents shall be submitted to the Engineer accompanied by a detailed log of the contents of each DVD. The log should include location descriptions with corresponding file name to facilitate the quick location of information contained on the DVDs. The DVDs will be maintained by the Engineer during construction and may be viewed at any time by Contractor upon request. Upon final acceptance, the DVDs will become the permanent property of the Owner.

1.10 PROGRESS PAYMENTS

A. The detailed arrangement for submittal of progress payments shall be discussed at the preconstruction meeting. In general, progress payments shall be submitted monthly in a format acceptable to the Engineer. The progress payment request shall be based on the unit prices and should provide the percentage of completion, total dollar value completed, dollar value completed prior to the current payment, and the amount requested for this progress payment for each line item contained in the schedule of values. Progress payment requests for material and/or equipment suitably stored but not yet incorporated into the work shall be accompanied by a copy of the appropriate manufacturers invoice, shipping order, bill of lading, etc. and the progress payment amount shall be the direct cost to the Contractor, or subcontractor, for such material and/or equipment. Payment will not be made to the Contractor if, upon inspection by the Engineer, it is determined that the material and/or equipment does not conform to the requirements of the Contract Documents including proper storage, receipt of approved shop drawings, receipt of any special guarantees, Bonds, insurance coverage, any evidence of damage or imperfections, etc.

1.11 CONTRACTOR'S DAILY REPORTS

A. The Contractor shall complete daily reports containing at least the following information:

1. A description of daily work activities performed, including but not limited to:
   a. size and quantity of main installed,
   b. size and quantity of fittings, valves, and hydrants installed,
   c. quantity of granular fill installed,
   d. description and quantity of other equipment and materials installed,
2. Description and quantity of underground obstructions encountered;
3. A description of daily material or equipment deliveries;
4. The temperature and weather conditions;
5. The names and number of hours worked by each trade (General Contractor);
6. The number of craftsmen and hours worked by each Subcontractor;
7. The number of hours worked by each type of equipment;
8. Downtime due to equipment failure;

9. Detailed description of issues that may cause the Contractor to incur delays, including quantity and types of issues.

B. The daily reports shall be available upon request from Owner.

C. Information provided on the daily report shall not constitute notice of delay or any other notice required by the Contract Documents. Notice shall be as required therein.

1.12 OPERATING AND MAINTENANCE INSTRUCTION MANUALS

A. Prepare complete written maintenance and operating instructions covering the equipment provided under this Contract. Divide the operating instructions into basic sections according to type of equipment.

B. Instructions shall describe all equipment and controls, their purpose, and their operation and use. Include maintenance checklists for use by the Owner's personnel and a complete listing of replacement parts with pertinent information relative to ordering such parts.

C. Submit instructions in duplicate draft form for review by the Engineer at least eight weeks prior to initial operation and in final form within thirty days after return of one copy of the draft with the Engineer's notations.

D. Prior to release of Final Payments, revise and resubmit copies of the instructions to accord with any changes in procedures or equipment made during start-up or initial operation. Resubmittals are also required for changes made during the guarantee period.

1.13 REQUIREMENTS FOR AMERICAN WATER ASSET VALUES

Provide a breakdown of the contract amount by Property Units in accordance with the list of Property Units that can be provided as requested. This process requires that the contractor assign the full cost of the project to lengths of pipe (by material and size), length of services (by material and size), hydrants, valves (by size), manholes and other fixtures (air relief valves, blowoffs, etc.) in the project. The submission must be approved by the Engineer to verify that the breakdown is realistic and reflects submitted contract unit prices.

1.14 PROJECT RECORD DOCUMENTS (BY CONTRACTOR)

A. The Contractor shall complete and maintain on-site one set of the following Record Documents, which shall record all actual revisions to the Work concurrent with construction progress and shall be available upon request (during working hours or on the next business day) by the Owner, Engineer or Resident Project Representative.

1. Drawings;

2. Specifications;
3. Addenda;
4. Change orders and other modifications to the Contract;
5. Approved Shop Drawings and other submittals;
6. Field sketches.

B. The Record Documents shall be updated daily (red-line markups). The Owner reserves the right to stop Work at Contractor's expense until red-line markups are up to date. Red-line markups shall contain but are not limited to the following information.

C. Store Record Documents separate from documents used for construction.

D. Specifications: Legibly mark and record at each product section description of actual products installed, including the following:

1. manufacturer's name and product model and number,
2. product substitutions or alternates utilized,
3. changes made by addenda and modifications.

E. Record Drawings, Documents and Shop Drawings: Legibly mark each item to record actual construction including:

1. Original Drawings with Red-Line markings including measured horizontal and vertical locations of underground utilities and appurtenances, referenced to permanent surface improvements as stated in Section 01300 Submittals.
2. Field changes of dimension and detail
3. Pipe restrained joint lengths
4. Actual fitting and valve locations with horizontal dimensions measured from permanent structures.
5. Depths that exceed the minimum cover
6. Details not on original Drawings.
7. Pre and Post Construction videos
8. Electronic photographs
9. Others as required in other sections of the Specifications.

F. Submit documents to Engineer with final Application for Payment.

G. The Owner will issue a notice of Final Completion to the Contractor when the Work is in-service and up-to-date Record Documents have been provided by the Contractor.

PART 2: PRODUCTS

1.01 TESTING DATA CERTIFICATES

Product testing shall comply with all respective AWWA standards. The certificates of compliance shall be electronically scanned and submitted by E-mail to the Engineer or by submitting the hard copy originals to the Engineer.

PART 3: EXECUTION

Not Used.

END OF SECTION

SECTION 01500

TEMPORARY FACILITIES

PART 1: GENERAL

1.01 WATER SUPPLY

A. If reasonably available, water for the purpose of this Contract will be supplied to the Contractor by the Owner.

B. Furnish and install all necessary meters, temporary piping and valves in connection with such water supply.

C. All water used by the Contractor shall be metered through an Owner approved meter installed by the Contractor.

D. The Owner reserves the right to impose limitations upon the Contractor's use of water as the Owner, in its sole discretion, determines may be necessary to assure it of its continued ability to meet the demands of its customers and the volumes and pressures required for fire protection. Any water required by the Contractor in excess of the quantities the Owner provides to the Contractor must be furnished by the Contractor at Contractor's expense.

1.02 TEMPORARY HEAT

Provide approved type heating apparatus with the necessary fuel in order to protect and/or dry out the work. Do not leave stored fuel unsecured. The stored materials and finished work shall be protected at all times from damage by the weather elements. If required by weather factors, forced curing of the paint will be required.

1.03 ELECTRICAL SUPPLY

Pay all fees, obtain necessary permits, have meter installed for power and light, and pay all monthly charges as may be required for the completion of work.

1.04 TEMPORARY LIGHTING

Provide and maintain lighting for construction operations and lighting to exterior staging and storage areas after dark as necessary for security purposes.

1.05 BARRIERS

Provide barriers to prevent unauthorized entry to construction areas. Barriers shall be sufficient to protect people, existing facilities, and adjacent properties from damage or injury. Provide protection for plant life designated to remain. Replace damaged plant life.

1.06 FENCING

Refer to Part 1.05 Barriers of this Section for temporary barrier requirements.

1.07 PARKING

A. Arrange for temporary parking to accommodate construction personnel.

B. Continual parking in grass areas in the right-of-way by the Contractor shall not be allowed.

1.08 PROGRESS CLEANING

Maintain areas free of waste materials, debris, and rubbish. Maintain site in a clean and orderly condition. Remove debris and rubbish from closed or remote spaces, prior to enclosing the space. Broom and vacuum clean interior areas prior to start of surface finishing, and continue cleaning to eliminate dust. Remove waste materials, debris, and rubbish from site weekly and dispose off-site.

1.09 SANITARY FACILITIES

A. Provide suitable temporary facilities and enclosures for the use of workers and site visitors and shall maintain same in a sanitary condition.

B. The Contractor is advised that the Owner is in the business of providing potable water and the Contractor's sanitary arrangements shall not endanger the Owner's facilities.

1.10 FIELD OFFICES

Furnishing a field office is not required.

PART 2: PRODUCTS

Not Used.

PART 3: EXECUTION

Not Used.

END OF SECTION

SECTION 01570

TRAFFIC REGULATION

PART 1: GENERAL

1.01 SCOPE OF WORK

Furnish and install all traffic barricades, markers, signs, and controls. Provide flagmen, traffic police and other facilities required by the Federal, State and local government authorities and the Engineer to protect general public and maintain the existing roads, streets and highways. Payment in section 1075 is included with pipe.

A. Traffic control methods and materials shall conform to the latest editions of applicable State DOT Standard Specifications for Road and Bridge Construction and USDOT Manual on Uniform Traffic Control Devices for Streets and Highways.

B. Prior to the start of construction, assign one individual at a supervisory level who will be responsible for maintenance and protection of traffic. See General Conditions article 6.

C. Competent traffic personnel suitably attired for safety shall be employed at every location where the Contractor's equipment is working immediately adjacent to, or is entering, leaving or crossing, active traffic lanes. The traffic personnel shall be employed continuously for the full time such conditions exist.

D. Special attention shall be given for the protection of pedestrians and, in particular, children going to and coming from school. Ingress and egress shall be maintained for all properties abutting the pipeline.

E. Notify the State and local police, ambulance services and fire departments of daily traffic diversions.

F. Be fully responsible to complete all obligations of the Contract regardless of any restrictions which may be imposed by Federal, State or local authorities. The Owner or Engineer make no warranty or representation that the Contractor will be permitted to divert or barricade traffic.

1.02 MAINTAINING TRAFFIC

A. Traffic Diversion: Whenever it is necessary to divert traffic from its normal channel into another channel, such diversion shall be clearly marked by cones, drums, barricades or temporary guardrail. If the markers are left in place at night, suitable lights shall be provided and maintained.

B. One Way Traffic: Whenever one way traffic is established, at least two (2) flagmen shall be provided and adhere to all requirements of the local police and street regulator having jurisdiction.

C. Street Closing: When permitted by Federal, State or local authorities having jurisdiction, the Contractor may close streets to through traffic for minimum periods of time. Notify and secure the permission of the local police and fire departments and such other public authorities and, if required by any law, ordinance or regulation, the occupants of all premises bordering the streets. Give all occupants reasonable notice with respect to the closing of any street, in whole or in part, even when not required by any law, ordinance, or regulation. Schedule work such that the time the street is closed is kept to a minimum and, whenever possible, make suitable preparations for access by local residents, school buses, and mail delivery vehicles. Provide access for police, fire, ambulance and emergency vehicles at all times. Fire hydrants and other public utility valves shall be kept accessible at all times.

1.03 TRAFFIC SIGNALS AND CONTROLS

A. The installation and operation of all traffic signals and traffic control devices shall conform to the requirements of Federal, State and local government highway departments. The replacement of pavement markings disturbed during construction or the installation of temporary markings is the sole responsibility of the Contractor.

B. To protect persons from injury and to avoid property damage, adequate barricades including flasher and reflectorized construction signs and guards as required shall be placed and maintained during the progress of the construction work and until it is safe for traffic and pedestrians to use the trenched area.

C. When permitted to close a street or read to traffic, furnish, erect, maintain and remove barricades, suitable and sufficient red lights, and other lights or reflecting material at the limits of the project, where side streets intersect, and at other points of public access to the project. Furnish, erect and maintain advance warning signs and barricades on side street at the first street intersection beyond the one closed by construction indicating “Street Closed, One Block Ahead”. Furnish, erect, maintain and remove detour marking signs on temporary routes.

1.04 TRENCH AND STORED MATERIALS MARKINGS

A. Before completion of each day’s work, in traveled areas, the pipe trench shall be completely backfilled and tamped, and the necessary temporary paving installed. ¾-inch stone will be used in sidewalk and walkway areas and blacktop in driveways. These areas are not to be left open, impassable or unsafe through the night. In the event that the pipe trench cannot be completely backfilled and tamped, temporary bridges and crossings shall be used to accommodate through traffic and the general public. The job site will be left in a neat and satisfactory condition at the end of each day. The requirements of this Section are in addition to any requirements of Federal, State or local laws, rules, regulations or ordinances or any requirements found elsewhere in the Contract Documents.

B. Equipment and material stored on the street shall be marked at all times. At night any such material or equipment stored between the side ditches, or between lines 5 feet behind any raised curbs, shall be clearly outlined with light or other dependable warning devices that are approved by the Engineer. In

addition, provide any other lights, barricades, etc., that may be needed for the protection of pedestrian traffic.

1.05 OTHER REQUIREMENTS

A. Trucks and/or trailers used as protective vehicles to protect workers or work equipment from errant vehicles on roadways with posted speed limits of 50 MPH or greater shall be equipped with Truck-Mounted Attenuators conforming to the National Cooperative Highway Research Program (NCHRP) Report 350 "Recommended Procedures for the Safety Performance Evaluation of Highway Features".

B. The protective truck must be positioned a sufficient distance in front of the workers or equipment being protected to allow for appropriate vehicle roll-ahead, but not so far that errant vehicles will travel around the vehicle and strike the workers/equipment. Attenuators should be in the full down-and-locked position.

C. For stationary operations, the truck's parking brake should be set and, when possible, the front wheels turned away from the work site. Turning the front wheels should be based on specific conditions at the site such that the after-impact trajectory is into a safe area.

D. If the regulation of traffic and controls are not being provided in accordance with this Section 1570, and the public is inconvenienced or its safety is being endangered, in the judgment of the Engineer, the Owner may take such steps as it deems advisable to provide such services and all costs in providing such services will be deducted from any payment which may be due or may thereafter become due the Contractor.

PART 2: PRODUCTS

Not Used.

PART 3: EXECUTION

Not Used.

END OF SECTION

SECTION 01600

PRODUCTS

PART 1: GENERAL

1.01 PROTECTION OF MATERIAL AND EQUIPMENT

A. Provide for the safe storage of all material furnished or purchased until it has been incorporated in the completed project and accepted by the Engineer. Bear the risk of loss and/or damage to the materials and Work until the Work is finally accepted by the Engineer.

B. All electrical and mechanical equipment shall be stored in a warm, dry shelter with proper ventilation. Under no circumstances shall motors, electrical control equipment or any other electrical or mechanical equipment be stored under polyethylene plastic covers or tarpaulins. When space is available inside existing structures, and the Owner approves, the Contractor will be allowed to store equipment inside them. Should such space not be available, construct a shelter with a source of heat and proper ventilation as approved by the Engineer for the storage of equipment.

C. The interior of all pipe, fittings, and accessories shall be kept free from dirt, foreign matter and standing water at all times.

D. After valves and hydrants have been inspected, properly store them prior to use. In order to prevent entry of foreign material that could cause damage to the seating surfaces, the valves and hydrants shall be stored in a fully closed position unless recommended otherwise by the manufacturer. Resilient seated valves shall be stored in accordance with the manufacturer's recommendations. This may include storage with protective covers for rubber seats and in marginally open condition. Valves and hydrants shall be stored indoors unless otherwise approved by the Engineer.

E. If valves must be stored outdoors, protect the operating mechanism, such as gears, motor, actuators and cylinders, from weather elements. Valve ports and flanges must be protected from the weather and foreign materials. If valves are subject to extreme (freezing or excessively hot) temperatures, all water must be removed from the valve interior and the valve closed tightly before storage, unless specifically recommended otherwise by the manufacturer. Valves shall be stored on pallets with the discs in a vertical position to prevent rainwater from accumulating on top of the disc, seeping into the valve body cavity and freezing and cracking the casting.

1.02 SERVICING EQUIPMENT

A. Check all equipment upon acceptance to determine if oil reservoirs are full and areas to be greased are properly packed with grease. Provide the proper grease or oil for use in lubricating the required areas in the equipment. Any service to equipment while in storage, or installed pending acceptance, is the responsibility

of the Contractor and shall be performed per manufacturer's requirements, industry standards or as stated specifically in the technical specifications.

1.03 RESPONSIBILITY FOR MATERIAL AND EQUIPMENT

A. Under no circumstances shall pipe, valves, fittings, or appurtenances be dropped or dumped from any trucks or equipment. When received from the Carrier and at time of unloading, inspect all pipe and accessories for loss or damage. No shipment of material shall be accepted by the Contractor unless loss or damage has been described on the Bill of Lading by the Carrier's agent. Any discrepancies between the Bill of Lading and the physical material shall be noted on the Bill of Lading. All demurrage charges on carloads or truckloads of pipe or other material shall be paid by the Contractor.

B. After acceptance of material and/or equipment by Contractor at point of delivery, assume full responsibility for safe and secure storage, handling, servicing and installation of such material and/or equipment in accordance with manufacturer's recommendations, industry standards or specific requirements of the Contract Documents. Once in his possession, assume full responsibility for, and protect all material from theft and damage. Any lost or stolen materials shall be replaced at the Contractor's expense.

C. Re-inspect all material for defects, correct size, and quantity in the field prior to installation. Immediately report all material found to be defective, improperly sized, or deficient in quantity to the Owner.

D. The Contractor is responsible for all material furnished by the Contractor and Contractor suppliers. All such material which is defective in manufacture or has been damaged in transit or has been damaged after delivery shall be replaced by the Contractor at his expense.

E. Certain material and equipment will be furnished by the Owner as noted in the Contract Documents. The Contractor's responsibility for material and/or equipment furnished by the Owner shall begin upon the Contractor's acceptance of such material and/or equipment at the point of delivery. All material and equipment shall be examined and items found to be defective in manufacture and/or otherwise damaged shall be rejected by the Contractor at the time and place of delivery. The Owner will thereupon repair or replace the damaged items. Any material and/or equipment found to be defective prior to acceptance by the Engineer shall be repaired or replaced by Contractor at no additional cost to Owner unless Contractor submits proof that such defect was latent and could not have been detected by Contractor when performing their duties and responsibilities under these Contract Documents.

F. Contractor's and Owner's responsibilities for providing guarantees or warranty and manufacturer's representatives for service, inspection, certification of installation, installation, field training, start-up, etc. for material and/or equipment furnished by Owner shall be as follows unless otherwise specified: Owner will provide the warranty and Contractor is responsible for providing manufacturer's representatives for all necessary field service, start-up service, installation

certifications, installation, field training of Owner's personnel, etc. for Owner furnished material and/or equipment as required for acceptance of such material and/or equipment in the completed project.

PART 2: PRODUCTS

2.01 GENERAL

Unless otherwise specifically provided for in these Specifications, all equipment, materials and articles incorporated in the work shall be new, in current production and the best grade obtainable consistent with general construction usage.

2.02 COORDINATION OF DIMENSIONS

Verify and make necessary corrections to construction dimensions so that all specified and/or alternative equipment, which is approved by the Engineer, can be installed and will function within the intent of the Contract Drawings and Specifications. Promptly notify the Engineer of all necessary corrections required.

2.03 SAFETY AND HEALTH REQUIREMENTS

A. All materials, equipment, fixtures and devices furnished shall comply with applicable Laws and Regulations.

B. All material and equipment furnished and installed under this Contract shall be equipped with suitable and approved safety guards and devices required for the safety of the public and operating personnel. Such guards and safety devices shall be in accord with the latest requirements of safety codes approved by the American National Standards Institute as well as the safety requirements of applicable Laws and Regulations. Where said safety codes of the ANSI are incompatible with applicable Laws and Regulations, said Laws and Regulations shall prevail.

PART 3: EXECUTION

3.01 INSTALLATION

A. Material and equipment shall be installed in accordance with the appropriate Sections of these Specifications.

3.02 SERVICES OF MANUFACTURER'S REPRESENTATIVE

A. Arrange for a qualified service representative from each company, manufacturing or supplying certain equipment as required by the individual Specification Sections to perform the duties herein described.

B. After installation of the applicable equipment has been completed and the equipment is presumably ready for operation, but before it is operated by others, the representative shall inspect, operate, test, and adjust the equipment. The

inspection shall include, but shall not be limited to, the following points as applicable:

1. soundness (without cracked or otherwise damaged parts)
2. completeness in all details, as specified
3. correctness of setting, alignment, and relative arrangement of various parts
4. adequacy and correctness of packing, sealing and lubricants

C. The operation, testing, and adjustment shall be as required to prove that the equipment is left in proper condition for satisfactory operation under the conditions specified.

END OF SECTION

SECTION 01700

PROJECT CLOSEOUT

PART 1: GENERAL

1.01 TESTING OF FACILITIES

All work shall be tested under operating conditions and pressures and any leaks or malfunctions shall be repaired to the satisfaction of the Engineer at no additional expense to the Owner.

1.02 CLOSEOUT PROCEDURES

Submit written certification that Contract Documents have been reviewed, Work has been inspected, and that Work is complete in accordance with Contract Documents and ready for Engineer's inspection. Provide submittals to Engineer that are required by governing or other authorities. Submit Application for final payment identifying total adjusted Contract sum, previous payments, and sum remaining due.

1.03 PROGRESS CLEANING AND FINAL CLEANING

A. Periodically, or as directed during the progress of the Work, remove and properly dispose of the resultant dirt and debris and keep the premises reasonably clear. Upon completion of the Work, remove all temporary construction facilities and unused materials provided for the Work and put the premises in a neat and clean condition and do all cleaning required by the Specifications. Trash and combustible materials shall not be allowed to accumulate in construction locations.

B. Execute final cleaning prior to final inspection. Clean interior and exterior surfaces exposed to view; remove temporary labels, stains and foreign substances. Clean equipment and fixtures to a sanitary condition. Clean debris. Clean site; sweep paved areas, rake clean landscape surfaces. Remove waste and surplus materials, rubbish, and construction facilities from the site.

1.04 PROJECT RECORD DOCUMENTS

A. Maintain on site, one set of the following record documents; record actual revisions to the Work:

1. contract drawings
2. specifications
3. addenda
4. change orders and other modifications to the Contract
5. reviewed shop drawings, product data, and samples

Store record documents separate from documents used for construction. Record information concurrent with construction progress.

B. Specifications: Legibly mark and record at each product section description of actual products installed, including the following:

1. manufacturer's name and product model and number
2. product substitutions or alternates utilized
3. changes made by addenda and modifications

C. Record Documents and Shop Drawings: Legibly mark each item to record actual construction including:

1. Measured well depths, screen, casing, and pump types and dimensions in relation to finished ground elevation.
2. Measured site location of well, vault and any other structures.
3. Measured horizontal and vertical locations of underground utilities and appurtenances, referenced to permanent surface improvements.
4. Field changes of dimension and detail.
5. Details not on original Contract Drawings.

Submit documents to Engineer with final Application for Payment.

1.05 SPARE PARTS AND MAINTENANCE MATERIALS

A. Contractor Purchased Material

1. Provide products, spare parts, maintenance and extra materials in quantities specified in individual specification sections.

2. Deliver to project site and place in location as directed; obtain receipt prior to final payment.

B. Owner Purchased Material

1. Return excess owner material to a location(s) specified by the Engineer within three (3) days of job completion.

1.06 GUARANTEES AND WARRANTIES

A. The Contractor expressly warrants that all workmanship and materials performed or furnished under this Contract will conform to the Specifications, Drawings, samples and other applicable descriptions furnished or adopted by the Contractor and with all applicable laws, provisions and requirements of the Contract Documents. Remedy any defects due to faulty materials or workmanship which are discovered within a period of one (1) year from the date of acceptance of the work in this project and pay for any damage resulting from faulty materials or workmanship. The Owner shall give notice of observed defects with reasonable promptness. The Contractor warranty hereunder is in addition to, and not in limitation of, any obligations found elsewhere in the Contract Documents, any special guarantees provided by the Contractor or Contractor suppliers, and any obligations imposed by law.

B. In addition to the above requirements, assign material and equipment guarantees and warranties from all manufacturers and suppliers to the Owner and deliver copies of such guarantees and warranties and the necessary assignments to the Owner in order to assure the Owner of the full benefit of such guarantees and warranties.

1.07 RESTORATION

A. Restore and/or replace paving, curbing, sidewalks, gutters, shrubbery, fences, sod or other disturbed surfaces and structures to a condition equal to that before the Work began and to the satisfaction of the Engineer and furnish all labor and materials incidental thereto. In restoring improved surfaces, new pavement is required.

B. No permanent bituminous top paving shall be placed within twenty (20) days, or other specified time frame required by law, after the backfilling shall have been completed, except by order of the Engineer. Temporary paving will be installed prior to the placement of permanent surfaces when required by the Engineer or by any federal, state or local governing body having jurisdiction over the site where the work is being performed. In any event, all permanent bituminous top paving shall be placed within forty five (45) days or other specified time required by law, after the backfill has been completed unless otherwise ordered by the Engineer.

1.08 MAINTENANCE OF SURFACES

Following the certification of completion by the Engineer, maintain the surfaces of paved and unpaved trenches and adjacent curbs and gutters, sidewalks, fencing, sod and other disturbed surfaces for a period of one (1) year thereafter or as required by state, county or local authorities unless otherwise stipulated by the Engineer. Supply all material and labor required for the maintenance of the trench surfaces and structures and perform the work in a manner satisfactory to the Engineer.

PART 2: PRODUCTS

Not Used.

PART 3: EXECUTION

Not Used.

END OF SECTION

SECTION 02020

DEWATERING

PART 1: GENERAL

1.01 GENERAL

A. Should water be encountered, furnish and operate pumping equipment of sufficient capacity to dewater the trench. Dewater the trench so that the laying and joining of the pipe is made in a dry environment so as to prevent water from entering the pipe during construction.

B. No additional sum will be allowed for any reasonably anticipated dewatering operation, overtime, equipment rental or any other expense incurred due to the occurrence of ground water, surface water or water from possible leakage of existing buildings, structures and piping in the vicinity of the Contractor's operations. If Contractor believes unreasonable, unanticipated wet conditions exist, immediately contact Engineer to decide appropriate measures and to determine whether Contractor is entitled to additional compensation.

C. Convey all trench water to a natural drainage channel or storm sewer without causing any property damage. Discharge shall be in strict accordance with state and/or local requirements.

D. Dispose of silt and debris which accumulates during construction in strict accordance with state and/or local requirements.

1.02 PERMITS

The Contractor shall obtain and pay for any permits required for dewatering and disposal.

PART 2: PRODUCTS

Not Used

PART 3: EXECUTION

Not Used

END OF SECTION

SECTION 02025

EXISTING UTILITIES AND STRUCTURES

PART 1: GENERAL

1.01 SCOPE OF WORK

Certain information regarding the reputed presence, size, character, and location of existing Underground Facilities such as pipes, drains, sewers, electrical lines, telephone lines, cable TV lines, gas lines, and water lines has been shown on the Contract Drawings and/or provided in the contract documents. This information with respect to Underground Facilities is provided by the Owner in accordance with conditions described in the General Conditions and for information purposes only. Contractor is responsible to determine actual location of all utilities in proximity to the work for the purposes of the preparation of their bid and during construction.

1.02 NOTIFICATION OF UTILITIES

Notify the applicable State Agency with jurisdiction over underground facilities and/or all utility companies that construction work under this Contract will pass through containing their underground facilities. Notify these parties in advance to support the construction work (minimum 72 hours). All excavation in the vicinity of existing underground utilities shall be performed in accordance with applicable regulations.

1.03 BRIDGE CROSSINGS

Notify the applicable State Agency and Transportation Organization with jurisdiction over bridge facilities and/or all utility companies that construction work under this Contract will pass at or near the bridge structure. Notify these parties in advance to support the construction work (minimum 72 hours or as required by the organization with jurisdiction). All construction in the vicinity of existing bridge structures shall be performed in accordance with applicable regulations.

PART 2: PRODUCTS

2.01 MATERIALS

Furnish all materials for temporary support, adequate protection, and maintenance of all underground and surface utility structures, supports, drains, sewer and other obstructions encountered in the progress of the work.

PART 3: EXECUTION

3.01 OBSTRUCTIONS BY OTHER UTILITY STRUCTURES

Support, relocate, remove, or reconstruct existing utility structures such as conduits, ducts, pipes, branch connections to main sewers, or drains. The obstruction

shall be permanently supported, relocated, removed or reconstructed where they obstruct the grade or alignment of the pipe. Contractor must do so in cooperation with the owners of such utility structures. Before proceeding, the Contractor must reach an agreement with the Engineer on the method to work around the obstruction.

No deviation shall be made from the required line or depth without the consent of the Engineer.

3.02 REPAIRS

A. Repair or replace any damage to existing structures, work, materials, or equipment incurred by Contractor's operations.

B. Repair all damage to streets, roads, curbs sidewalks, highways, shoulders, ditches, embankments, culverts, bridges, trees, shrubs or other public or private property caused by transporting equipment, materials or personnel to or from the work site. Make satisfactory and acceptable arrangements with the persons or agencies having jurisdiction over the damaged property concerning repair or replacement

C. Brace and support existing pipes or conduits crossing the trench, or otherwise exposed to prevent trench settlement from disrupting the line or grade of the pipe or conduit. Before proceeding, the Contractor must reach an agreement with the Engineer on the method of bracing and support. Repair or replace all utility services broken or damaged at once to avoid inconvenience to customers. Storm sewers shall not be interrupted overnight. Use temporary arrangements, as approved by the Engineer, until any damaged items can be permanently repaired. Maintain all items damaged or destroyed by construction and subsequently repaired.

D. Repair or replacement of sanitary or storm drains removed or damaged during installation of the water main shall be repaired immediately. Repairs or replacement of sanitary or storm drains shall meet all local, state and federal requirements.

3.03 RELOCATION

Relocate existing utilities or structures, where necessary, and restore it to a condition equal to that of the original facility. Obtain approval of the owner of the utility or structure prior to relocating and/or restoring the facility.

3.04 SEPARATION OF WATER MAINS AND SANITARY SEWERS

A. General

Consider the following factors when determining adequate separation:

(1) Materials and type of joints and restraints for water and sanitary sewer pipes,

(2) Soil conditions & backfill materials,

(3) Service and branch connections into the water main and sanitary sewer line,

(4) Compensating variations in horizontal and vertical separations,

(5) Space for repair and alterations of water and sanitary sewer pipes,

(6) Off-setting of pipes around manholes.

B. Parallel Installation

Lay water mains at least 10 feet horizontally from any existing or proposed sanitary sewer, including sanitary sewer service connections, and sanitary or combined sewer manholes,. Measure the distance from edge to edge. In cases where it is not practical to maintain a 10-foot separation, the applicable State Agency may allow deviation on a case-by-case basis, if supported by data from the Engineer. Such deviation may allow installation of the water main closer to a sanitary sewer, provided that the water main is laid in a separate trench or on an undisturbed earth shelf located on one side of the sanitary sewer at such an elevation that the bottom of the water main is at least 18 inches above the top of the sanitary sewer.

C. Crossings

Whenever water mains must cross sanitary sewer laterals or sanitary sewers, lay the water main at such an elevation that the bottom of the water main is 18 inches above the top of the sanitary sewer pipe. Maintain this vertical separation for the portion of the water main located within 10 feet horizontally of any sanitary sewer it crosses. The 10 feet is measured as a perpendicular distance from sanitary sewer line to the water line.

D. Exception

Notify the Engineer when it is impossible to obtain the proper horizontal and vertical separation as stipulated above. If directed by the Engineer, either or both the water main and sanitary sewer line shall be constructed of, mechanical joint ductile iron or welded joint protected steel pipe. Other types of restrained joints of equal or greater integrity may be used at the discretion of the Engineer after consultation with the applicable State Agency. Pressure test these joints before backfilling to assure that they are water tight. Where water mains must cross under a sanitary sewer, additional protection shall be provided by:

(1) A vertical separation of at least 18 inches between the bottom of the sanitary sewer and the top of the water line,

(2) Adequate structural support for the sanitary sewer to prevent excessive deflection of the joints and the settling on and breaking of the water line,

(3) Centering the section of water pipe at the point of the crossing so that the joints shall be equidistant and as far as possible from the sanitary sewer line.

Consult the applicable State Agency, through the Engineer, to discuss the use of alternatives when the above conditions cannot be met.

E. Disposal Facilities

Water main shall not be located closer than 25 feet to any wastewater disposal facility, agricultural waste disposal facility, or landfill. Water mains shall be separated by a minimum of 25 feet from septic tanks and wastewater disposal area such as cesspools, subsurface disposal fields, pit privies, land application fields, and seepage beds.

3.05 SEPARATION OF WATER MAINS AND STORM SEWERS

Where water mains and storm sewers would run parallel, lay water mains at least 10 feet horizontally from the existing or proposed storm sewer including storm sewer service connections (measured from edge to edge). Where storm sewers and water mains would cross, place water mains at least 18 inches from the storm sewer (measured from edge to edge). In cases were it is not practical to maintain the specified separation, the Engineer may allow deviation on a case by case basis or as clearly called out in the plans. If the Engineer deems that such deviation will be allowed, install the water main as directed by the Engineer in such a way that does not compromise more stringent and desired separation from sanitary sewers per subsection 3.04.

END OF SECTION

SECTION 02105

CLEARING AND GRUBBING

PART 1: GENERAL

1.01 PROTECTION

Protect existing trees, shrubs and bushes located outside the clearing limits from damage for the life of this Contract.

1.02 REQUIREMENTS OF REGULATORY AGENCIES

Comply with State and local code requirements when disposing of trees, shrubs and all other materials removed under this Specification Section.

1.03 DISPOSAL FEES

Bear all expenses to obtain a suitable disposal area, haul to the disposal area, pay disposal fees, and dump at the disposal area.

PART 2: PRODUCTS

2.01 MATERIALS AND EQUIPMENT

Provide all materials and equipment required to complete all clearing and grubbing in accordance with this Specification Section.

PART 3: EXECUTION

3.01 CLEARING AND GRUBBING

Clear and grub the minimum area required to provide space for construction operations.

A. Clear and grub the work site within easement and/or clearing limit lines shown on the Drawings or as shown elsewhere in the Contract Documents. Remove those items that are designated for removal or obstruct construction. This includes, but is not limited to; trees, downed timber, shrubs, bushes, vines, roots, stumps, undergrowth, rubbish, paving materials, debris, and all other objectionable materials. Site objects outside clearing limits shall not be removed. Only those portions of the construction area which are absolutely necessary and essential for construction shall be cleared. Minimize the length of time of ground disturbance as much as practical, especially within environmentally sensitive areas. Ground shall not be cleared and grubbed until immediately prior to construction.

B. Notify the Engineer of locations where additional trees and shrubs will interfere with installation of facilities. Do not remove additional trees or shrubs without written permission of Engineer. Conduct operations to

minimize disturbance of trees and shrubs. Trim trees and roots in accordance with the best horticultural practices, including sealing cuts to preserve the tree.

3.02 CLEARING (IMPROVED AREA)

A. Remove site improvement objects such as signs, lawn ornaments, etc. which interfere with construction. Removed site improvement objects shall be stored in a manner protecting objects for reinstallation after construction is complete. Relocate the mailbox as necessary. Provide temporary traffic control signs when permanent signs are removed for construction. Temporary signs shall be worded to match permanent signs, except as necessary to be compatible with construction operations.

B. Remove pavement, curb and sidewalk in accordance with applicable State Standards for Road and Bridge Construction and as specified in these Contract Documents. Saw cuts may be eliminated where paving abuts curb or roadway expansion joints or construction joints, and pavement can be removed without damaging or disturbing curbs or remaining pavement,. Remove sidewalks in full squares only. Saw cut sidewalks if no true joint exists.

3.03 DISPOSAL

A. Burning of logs, stumps, roots, cuttings and other material on the site will not be permitted.

B. All materials obtained as a result of the clearing and grubbing operations shall be disposed of in accordance with the requirements of the applicable governing agencies.

C. Chipping of brush materials will be permitted. However, Contractor shall bear all costs to dispose of the resultant chips at an approved location.

END OF SECTION

SECTION 02210

TRENCHING, BACKFILLING AND COMPACTING

PART 1: GENERAL

1.01 DEFINITIONS

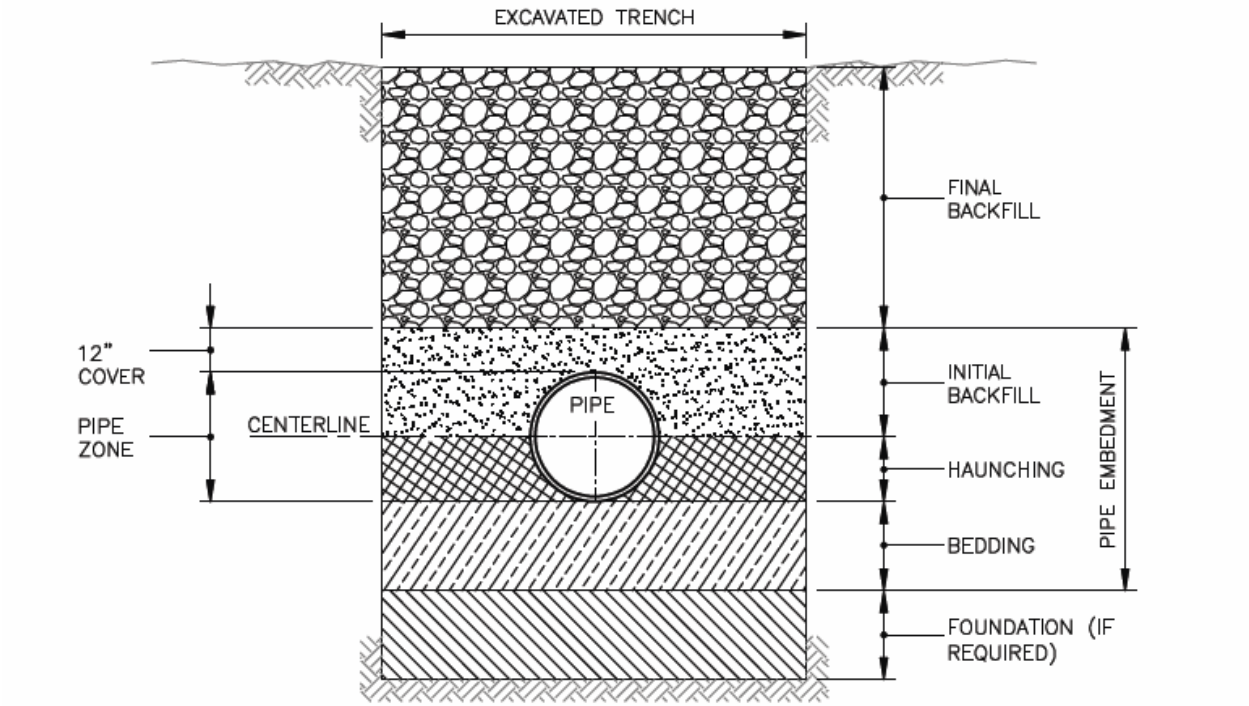

TRENCH TERMINOLOGY

FOUNDATION: A FOUNDATION IS NECESSARY ONLY WHEN NATIVE SOILS ARE UNSTABLE. FOR SUCH CONDITIONS, THE TRENCH IS OVER–EXCAVATED AND A LAYER OF SUPPORTIVE MATERIAL IS PLACED AND COMPACTED TO PROVIDE A FIRM FOUNDATION FOR THE SUBSEQUENT PIPE EMBEDMENT MATERIALS. MUST BE APPROVED BY THE ENGINEER PRIOR TO OVER–DIG.

EMBEDMENT: THIS ZONE IS THE MOST IMPORTANT IN TERMS OF PIPE PERFORMANCE. IT IS DIVIDED INTO THE FOLLOWING SUB ZONES:

- BEDDING: TYPICALLY SIX INCHES OF SUPPORTIVE, COMPACTED MATERIAL. THIS ZONE PROVIDES EVEN SUPPORT FOR THE PIPE AND BRINGS IT TO GRADE.
- HAUNCHING: EXTENDS FROM THE BOTTOM OF THE PIPE TO THE CENTERLINE OF THE PIPE. IT PROVIDES THE MOST RESISTANCE TO PIPE DEFLECTION. SPECIFYING PROPER MATERIALS AND COMPACTION ARE MOST IMPORTANT FOR THIS ZONE.
- INITIAL BACKFILL: EXTENDS FROM THE SPRINGLINE TO A POINT ABOVE THE TOP OF THE PIPE. THIS ZONE PROVIDES SOME PIPE SUPPORT AND HELPS TO PREVENT DAMAGE TO THE PIPE DURING PLACEMENT OF THE FINAL BACKFILL. THE COVER EXTENDS FROM THE TOP OF THE PIPE TO THE TOP OF THE INITIAL BACKFILL. THE DEPTH OF COVER SHOULD BE AS MUCH AS NECESSARY TO PROTECT THE PIPE DURING PLACEMENT OF THE FINAL BACKFILL. TWELVE INCHES IS A COMMON DEPTH OF COVER.

FINAL BACKFILL: THIS ZONE EXTENDS FROM THE TOP OF THE INITIAL BACKFILL TO THE TOP OF THE TRENCH. THIS ZONE HAS LITTLE INFLUENCE ON PIPE PERFORMANCE, BUT CAN BE IMPORTANT TO THE INTEGRITY OF ROADS AND STRUCTURES.
SEE SPECIFICATION SECTION 2210 FOR DESCRIPTION OF BACKFILL AND BEDDING MATERIAL.

1.02 SUBMITTALS

A. All backfill materials (to be used for backfill, haunching, and bedding), including Common Fill and ¾" Minus Granular Fill, shall be approved by the Engineer prior to placing the materials in the pipe trench. Test all backfill materials, whether obtained from the trench excavation or from an off-site source, as directed by the Engineer.

B. All backfill materials must be approved by the Engineer before they are placed in the pipe trench. Submit samples of the materials to an approved testing agency for analysis as required by the Engineer. Submit the testing agency's test results and report to the Engineer. The report must state that the materials meet the requirements of these Specifications and the Specifications of Federal, State and local authorities (where applicable).

1.03 PROFILES AND TOPOGRAPHY

A. Contours, topography and profiles of the ground shown on the Drawings are believed to be reasonable approximations and are not guaranteed.

B. The Contractor accepts the construction site with the conditions that existed at the time of bidding.

PART 2: PRODUCTS

2.01 COMMON FILL

A. Common Fill shall be earth materials entirely free of: vegetation; trash; lumber; and frozen, soft or organic materials. No stones or rocks larger than the sizes listed below will be permitted in the Common Fill:

Common Fill-Type A: No stones or rocks larger than 1-inch
Common Fill-Type B: No stones or rocks larger than 4-inches in the longest dimension

B. Common fill material may be obtained from the trench excavation provided it has been tested in accordance with the requirements of Specification Section 2210.1.01 above and approved by the Engineer. Furnish the necessary approved common fill materials from an off-site source whenever approved material obtained from the trench excavation is insufficient to complete the backfill.

2.02 HAUNCHING FILL

A. Materials used for haunching around the pipe shall be coarse to fine, sandy natural soil material with maximum stone size of 1-inch or ¾" Minus Granular Fill. The material shall conform to ASTM D 2487 "Standard Method for Classification of Soils for Engineering Purposes" using the "Unified Soil Classification System", except where a higher standard is required elsewhere in the Contract Documents or by rules or regulations of Federal, State or local governmental bodies having jurisdiction over the site of the Work.

B. The haunching material shall meet the Class II soil type designation. Class II soil types include GW, GP, SW and SP that are described as non-cohesive, well graded and containing some fines. Voids, finer grained soils or movement can allow undesirable migration of haunching material or migration of the trench sidewall material into the haunching material. In such instances place filter fabric, as directed by the Engineer, in the trench bottom and sides before placing the haunching material.

C. Haunching material may be obtained from the trench excavation provided it has been approved by the Engineer who may, at his discretion, require testing in accordance with the requirements of Specification Section 2210.1.01 above. Furnish the necessary approved haunching materials from an off-site source whenever approved material obtained from the trench excavation is insufficient to complete the haunching.

2.03 BEDDING FILL

A. ¾ inch minus granular fill material contains additional fine material and may be used as noted in specific pipe specifications. Material shall meet the sieve analysis requirements of AASHTO as follows 1" sieve passing 100%, ¾" sieve passing 80-90%, No 4 sieve passing 25-50%, No 10 sieve passing 0-20% No 200 passing sieve 0-5% or approved equal as approved by the Engineer.

B. Ductile Iron Pipe in Soil Soil shall be coarse to fine, sandy natural soil material with maximum stone size of 1-inch and shall meet ASTM D 2487 "Standard Method for Classification of Soils for Engineering Purposes". Scarify soil 2" deep before placing pipe.

2.04 FILTER FABRIC

Filter fabric shall be non-woven, synthetic fiber material with sieve design to prevent the select material in the pipe bedding and haunching from migrating into the surrounding soils. The material shall have a minimum: thickness of 15 mils, tensile strength of 130 lbs, elongation at break of 64%, and trapezoidal tear strength of 70 lbs.

PART 3: EXECUTION

3.01 CONSTRUCTION EQUIPMENT

All backfilling and materials handling equipment shall have rubber tires when mains are located in or adjacent to pavements. Crawler equipment shall be permitted when there is no danger of damaging pavement. It is the Contractor's responsibility, to repair, at their expense, any damages due to the use of any equipment to complete the work.

3.02 NOISE, DUST AND ODOR CONTROL

Conduct all construction activities so as to eliminate all unnecessary noise, dust and odors.

3.03 PROTECTION OF TREES

Take special care to avoid damage to trees and their root system. Open trenching shall not be used for established trees in areas marked on the plans and designated 'Root Protection Zone'. In these areas, methods to be used include tunneling or boring. In other areas where established trees are to remain with roots in the path of the trench line, the Engineer shall direct acceptable means to install pipe through tree roots. In these areas, methods to be used careful cutting (not ripping or tearing) of larger tree roots. In all cases, operate equipment within the limb spread in a manner which will not injure trees, trunks, branches or their roots. Pay particular attention when employing booms, storing materials, and handling excavated materials.

3.04 TRENCH SUPPORT

Support open cut excavation for mains where trenching may cause danger to life, unnecessary damage to street pavement, trees, structures, poles, utilities, or other private or public property. Support the sides of the excavation by adequate and suitable sheeting, shoring, bracing or other approved means in accordance with all applicable Federal, State, County, Municipal and OSHA rules and regulations during the progress of the work, whenever and wherever it is necessary. Maintain the trench support materials and equipment in place until backfilling operations have progressed to the point where the supports may be withdrawn without endangering life or property.

3.05 TRENCH EXCAVATION AND BOTTOM PREPARATION

A. General Excavation

General excavation shall consist of the satisfactory removal and disposal of all material taken from within the limits of the Work contracted, meaning the material lying between the original ground line and the finished ground line as shown on the Drawings regardless of whether the original ground line is exposed to air or is covered by water. Excavation below existing ground line to enable any required construction or removals is included. It is distinctly understood that any reference to earth, rock, silt, debris or other materials on the Drawings or in the Specifications is solely for the Owner's information and shall not be taken as an indication of classified excavation or the quantity of earth, rock, silt, debris or other material encountered.

Excavation to the lines and grades indicated on the Drawings or established in the field by the Engineer. Backfill over-excavated areas with approved fill material. All labor and materials shall be furnished at the Contractor's expense.

Keep all excavations free from water. Maintain groundwater a minimum of 6 inches below excavations. Remove soil which is disturbed by pressure or flow of groundwater and replace with free draining material.

Remove pavement over excavations made in paved roadways by saw cutting, milling, or removal by a trench machine. Cut the full depth of the pavement with straight lines and squared edges.

Dispose of excess excavated materials and excavated materials unsuitable for backfilling off site. Furnish the Engineer with satisfactory evidence that an appropriate disposal site was used.

B. Rock Excavation

If the Contract includes a unit price for rock excavation, it includes the removal, hauling, stockpiling and/or proper disposal the rock per the section 01075 Basis of Payment. Rock is defined as

- boulders or loose rock having a volume of one cubic yard or more;
- material which cannot be loosened or broken down by ripping with a hydraulic ripper or other Engineer approved devices and equipment designed to remove rock; or
- material that requires systematic blasting, barring, backhoe ramming or wedging for removal.

Notify the Engineer promptly upon encountering rock. The Engineer's determination as to whether the material meets the definition of rock and Engineer's measurement of the volume of rock removal for which the Contractor is entitled to payment will be final and conclusive. No payment will be made for rock removed without Engineer's approval.

Strip rock for measurements as directed by the Engineer. No payment will be made for rock excavated or loosened before measurement. Only rock actually removed will be paid for, and in no case will payment be made for rock removal beyond the payment limits shown for a standard trench or more than 12" beyond the edge of a pipeline or 6" below its bottom for pipes of nominal OD 24 inches and less, unless such rock has been removed at the direction of Engineer.

C. Blasting Rock

Blasting is not allowed unless expressly permitted by the Engineer. Notify the Engineer in advance of blasting. Provide evidence to the Engineer that the proposed blasting will comply fully with Laws or Regulations.

Do not blast where limited or prohibited by any Federal, State or local laws or regulations, or in violation of any limitation or restriction contained in any right-of-way, or wherever specifically prohibited in any Drawing or other Contract Document. Do not blast within forty (40) feet of any pipe or structure without specific permission from the Owner. Properly cover blasts and protect the pipe or structure. Warn all persons in the vicinity. Blasting shall be at the risk of the Contractor who shall be liable for all damages to persons or property. Secure and pay for all necessary permits. Perform whatever pre-blast surveys and investigations that may be required by the circumstances and/or by Federal, State or local laws.

Prepare a blasting plan and submit it to the Engineer for approval prior to commencing any blasting work. The plan shall state all procedures and methods which will be used to monitor and mitigate the effect or impact of the proposed blasting work.

Employ an experienced blaster holding a blasting license issued by the applicable State to carry out the blasting work. Use, handle, and store explosives as prescribed by the applicable state and federal regulations. Keep all explosives in a safe place at a sufficient distance from the Work so that, in case of accident, no damage will occur to any part of the Work. Contractor shall be held responsible for and shall pay for all damage caused by blasting operations or accidental explosion.

D. Trench Width

Widths of trenches shall be held to a minimum to accommodate the pipe and appurtenances. The trench width shall be measured at the top of the pipe barrel and shall conform to the following limits:

Earth

Minimum: Outside diameter of the pipe barrel plus 8 inches, i.e., 4 inches each side.

Maximum: Nominal pipe diameter plus 24 inches.

Rock

Minimum: Outside diameter of the pipe barrel plus 24 inches, i.e., 12 inches each side.

Maximum: Nominal pipe diameter plus 30 inches. (Contractor will only be compensated for the minimum described above.

E. Excessive Trench Width

Provide additional backfill, haunching, and bedding material, as specified in Specification Sections 2210.2.01, 2210.2.02, and 2210.2.03 as approved by the engineer to fill any trench excavation that exceeds the maximum trench width defined in Specification Section 2110.3.05.D. Dispose of excess excavated materials off site at no cost to the Owner. Furnish the Engineer with satisfactory evidence that an appropriate disposal site was used.

F. Trench Depth

(1) General Provide 42 inches of cover from the top of the pipe barrel to the top of the finished grade of the roadway, unless otherwise authorized by the Engineer, or as shown on the plans.

(2) Earth Excavate to the depth required, so as to provide a uniform and continuous bearing and support for the pipe barrel on solid and undisturbed ground at every point between joints. It will be permissible to disturb the finished trench bottom over a maximum length of 18 inches near the middle of each length of pipe by the withdrawal of pipe slings or other lifting tackle. Provide bell holes and prepare the finished trench bottom accurately using hand tools.

(3) Rock Excavate trenches in rock or boulders 6-inches below the pipe barrel for pipe 24-inches or less in diameter. Remove all loose material from the trench bottom. Prepare a pipe bed using bedding material (3/4” Minus Granular Fill) as specified in Specification Section 2210.2.03.

(4) Unsuitable Bottom Notify the Engineer whenever unsuitable material is found below subgrade. Remove the material over the area and to the depth determined by the Engineer. Provide compacted bedding material (3/4” Minus Granular Fill) as specified in Specification Sections 2210.2.03 to restore the trench bottom to the required grade in these areas.

G. Open Trench Length

The length or size of excavation shall be controlled by the particular surrounding conditions, but shall always be confined to the limits prescribed by Engineer. If the excavation becomes a hazard, or if it excessively restricts traffic at any point, Engineer may require special construction procedures such as limiting the length of the open trench or prohibiting stacking excavated material in the street. Take precautions to prevent injury to the public due to open trenches. All trenches, excavated material, equipment, or other obstacles which could be dangerous to the public, shall be well lighted.

3.06 TRENCH BACKFILLING - OPEN TERRAIN

All trench backfilling shall be compacted so that no settlement occurs and is stable with surrounding soil that also shall not have settled.

A. Ductile Iron Pipe

(1) Bedding

a. In Suitable Soil See Section 2.03(b) for definition of soil and means of bedding.
b. In Rock or Unsuitable Soil When encountering rock or unsuitable material, prepare pipe bedding immediately before pipe is laid. In this instance, compact ¾" Minus Granular Fill as described in Specification Section 2210.2.03 from 6" below the pipe to the bottom of the pipe.
c. Bedding material shall be compacted in a maximum of 6" layers.

(2) Haunching

Place haunching from the bottom of the pipe barrel to the centerline (springline) of the pipe barrel with Haunching Fill as described in Section 2.02. Take care to avoid damaging or moving the pipe. Place the material in uniform 6 to 12 inch layers and compact each layer so as to eliminate the possibility of settlement, pipe misalignment, or damage of joints.

(3) Initial Trench Backfill

Backfill from the centerline (springline) of the pipe barrel to 12 inches above the pipe with Common Fill-Type A or ¾" Minus Granular Fill as described in Specification Sections 2210.2.01 and 2210.2.03.. Mechanical equipment may be used to place the backfill. Place the material in such a manner that the material does not free fall, but rather flows onto the previously placed material. Place the material in uniform 6 to 12 inch layers and compact each layer so as to eliminate the possibility of settlement, pipe misalignment, or damage of joints. **Do not** compact the backfill with mechanical equipment, unless sufficient cover of at least 6" is provided over the pipe to prevent damage to the pipe.

(4) Final Trench Backfill

Backfill from 12 inches above the pipe to final grade with Common Fill-Type B, as described in Specification Section 2210.2.01. Mechanical equipment

may be used to place the backfill. Place the material in such a manner that the material does not free fall, but rather flows onto the previously placed material. Place the material in uniform 6 to 12 inch layers and compact each layer so as to eliminate the possibility of settlement, pipe misalignment, or damage of joints.

(5) Surface Conditions

Attend to the trench surface regularly during the course of the Contract. Take prompt corrective measures to correct any settlement or wash-out. Maintain the trench surface in a safe condition that does not interfere with natural drainage.

(6) Deficiency of Backfill

Any material required for backfilling the trenches or for filling depressions caused by settlement or wash-out shall be supplied and placed by the Contractor at his expense.

B. PVC and HDPE Pipe

(1) Bedding

Prepare pipe bedding immediately before pipe is laid. Compact ¾" Minus Granular Fill as described in Specification Section 2210.2.03 from 6" below the pipe to the bottom of the pipe. Bedding material shall be compacted in a maximum of 6" layers.

(2) Haunching and Initial Backfill

Place haunching and initial backfill from the bottom of the pipe barrel to 12 inches above the top of the pipe barrel with ¾" Minus Granular Fill as described in Specification Section 2210.2.02. Mechanical equipment may be used to place the backfill. Place the material in such a manner that the material does not free fall, but rather flows onto the previously placed material. Place the material in uniform 6 to 12 inch layers and compact each layer so as to eliminate the possibility of settlement, pipe misalignment, or damage of joints.

(3) Remaining Trench Backfill

Backfill from 12 inches above the pipe to finished grade with Common Fill-Type B, as described in Specification Section 2210.2.01. Mechanical equipment may be used to place the backfill. Place the material in such a manner that the material does not free fall, but rather flows onto the previously placed material. Place the material in uniform 6 to 12 inch layers and compact each layer so as to eliminate the possibility of settlement, pipe misalignment, or damage of joints..

(4) Surface Conditions

Attend to the trench surface regularly during the course of the Contract. Take prompt corrective measures to correct any settlement or wash-out. Maintain the trench surface in a safe condition that does not interfere with natural drainage.

(5) Deficiency of Backfill

Any material required for backfilling the trenches or for filling depressions caused by settlement or wash-out shall be supplied and placed by the Contractor at his expense.

3.07 TRENCH BACKFILLING UNDER PAVMENT AND WITHIN 3 FEET OF PAVEMENT

A. Bedding

Install bedding for selected pipe material in accordance with Section 3.06.

B. Haunching and Initial Backfill

Install Haunching and Initial backfill for selected pipe material in accordance with Section 3.06.

C. Final Backfill

Fill the remainder of the excavation using ¾" Minus Granular Fill, as described in Specification Section 2210.2.02,. Place the material in uniform 6 to 12 inch layers and compact each layer so as to eliminate the possibility of settlement, pipe misalignment, or damage of joints, unless where a higher standard is required by rules or regulations of Federal, State or local governmental bodies having jurisdiction over the site of the Work. Take care to avoid injuring or moving the pipe.

D. Surface Conditions

Attend to the trench surface regularly during the course of the Contract. Take prompt corrective measures to correct any settlement or wash-out. Maintain the trench surface in a safe condition that does not interfere with natural drainage.

E. Deficiency of Backfill

Any material required for backfilling the trenches or for filling depressions caused by settlement or wash-out shall be supplied and placed by the Contractor at his expense.

3.08 JETTING OF BACKFILL

When approved by the Engineer, jetting of backfill in lieu mechanical compaction shall be allowed in all trenches except under pavement. Jetting shall include initial and final backfill and shall fully saturate backfill material.

3.09 QUALITY ASSURANCE TESTING

The Owner reserves the right to have the Contractor provide Independent Quality Assurance Testing for the backfill material, at the Contractor's expense.

3.10 TRENCH MAINTENANCE

Assume full responsibility for the condition of the trenches for a period of one (1) year from the date of the final acceptance of the Contractor's work, or as required by

state, county or local authorities, and any materials required for filling depressions caused by settlement or wash-out shall be supplied and placed by the Contractor at their expense.

END OF SECTION

SECTION 02220

CASING INSTALLATION

PART 1: GENERAL

1.01 GENERAL REQUIREMENTS

The installation of casing pipe shall conform to these Specifications and any Federal, State or local Highway requirements or any applicable Railroad requirements whichever may be more restrictive.

1.02 SUBMITTALS

Submit details of proposed jacking or boring pits to the Engineer showing locations, dimensions, and details of sheeting and shoring required, if requested.

1.03 RELATED WORK

Excavation, backfilling and compaction for jacking and receiving pits and for open cut installation shall conform to the requirements set forth in Specification Section 2210.

PART 2: PRODUCTS

2.01 MATERIAL

Casing pipe shall be bare wall steel pipe with a minimum yield strength of 35,000 psi and a minimum wall thickness as listed below:

Casing Outside Diameter Inches	Highway Crossings Casing Wall Thickness Inches	Railroad Crossings Casing Wall Thickness Inches
8.625	0.250	0.250
10.75	0.250	0.250
12.75	0.250	0.250
14	0.250	0.281
16	0.250	0.281
18	0.250	0.312
20	0.312	0.344
24	0.312	0.406
30	0.375	0.469
36	0.500	0.532
42	0.500	0.563
48	0.625	0.625
54	0.625	0.688
60	0.625	0.750
66	0.625	0.813
72	0.750	0.875

Smooth wall steel plates with a nominal diameter of over 54 inches shall not be permitted.

The inside diameter of the casing pipe shall be: at least four (4) inches greater than the outside diameter of the carrier pipe joints or couplings for carrier pipe less than six (6) inches in diameter; and at least six (6) inches greater than the outside diameter of the carrier pipe joints or couplings for carrier pipe six (6) inches and greater in diameter.

PART 3: EXECUTION

3.01 ALIGNMENT AND GRADE

Locate pipelines to cross roadways or tracks at approximately right angles where practicable, but preferably at not less than 45 degrees. Do not place pipelines in culverts or under bridges where there is likelihood of their restricting the area required for the purposes for which the bridges or culverts were built, or of endangering the foundations. Install the casing pipe on an even grade for its entire length and sloped to one end or as noted in a profile plan if provided. Satisfy a maximum tolerance of 1.5% (18" in one hundred feet) with the desired location of the casing or as otherwise required by regulation or specified on the plans, whichever is more restrictive.

3.02 WELDING

Connect steel casing sections by welding. Welding shall conform to AWWA Standard C206.

3.03 PROTECTION AT ENDS OF CASING

Block up both ends of casings in such a way as to prevent the entrance of foreign material, but to allow leakage to pass in the event of a carrier break.

3.04 DEPTH OF INSTALLATION

Unless the depth of casing pipe is specifically specified on the drawings, the casing pipe depth shall be in accordance with highway or railroad requirements.

3.05 CASING INSULATORS

The carrier pipe and casing shall be separated by an insulator. The insulator spacing shall be installed to support the weight of the pipe and contents. As a minimum, an insulator shall be placed a maximum of 3 foot from each side of a joint and evenly spaced along the carrier pipe with 3 insulators per each length of carrier pipe. Timber skids are not allowed. Casing insulators shall be sized according to the manufactures specifications for pipe sizes from the following list of approved manufactures and casing types.

A. Cascade Water Works Manufacturing Company (Stainless Steel only).
B. Pipeline Seal and Insulator, Inc. (Carbon Steel with polyvinyl chloride or the Ranger II model).

C. Advanced Products and Systems, Inc. (Model SI).
D. Power Seal Pipeline Products Corp. (Model 4810).
E. RACI (polyethylene model F-60 for 12-inch carrier pipe and smaller). *RACI shall not be used for carrier pipe larger than 12-inch.*
F. CCI Pipeline Systems (Standard Restrained Configuration)

At the sole discretion of the Engineer, alternate manufactures in lieu of those described above and new or improved products by the same manufactures may be permitted. To seek approval, adequately describe any proposed alternate product and submit the same with shop drawings and specifications to the Engineer. The Contractor cannot proceed to employ said alternate products prior to receiving written approval of from the Engineer.

3.06 INSTALLATION

Refer to Standard Detail 0201-0601-SD45 at the end of this Specification Section for a typical casing installation detail.

Install casing pipes by one of the following methods:

A. Jacking

This method shall be in accordance with the current American Railway Engineering Association Specifications, Chapter 1, Part 4, "Jacking Culvert Pipe Through Fills", except that steel pipe shall be used with welded joints. Conduct this operation without hand mining ahead of the pipe and without the use of any type of boring, auguring or drilling equipment.

Design the bracing, backstops, and jacks so that the jacking can progress without stoppage (except for adding lengths of pipe).

B. Drilling

This method employs the use of an oil field type rock roller bit, or a plate bit made up of individual roller cutter units, welded to the pipe casing being installed. Turn the pipe for its entire length from the drilling machine to the head to give the bit the necessary cutting action against the ground being drilled. Inject high density slurry (oil field drilling mud) through a supply line to the head to act as a cutter lubricant. Inject this slurry at the rear of the cutter units to prevent any jetting action ahead of the pipe. Advance the drilling machine on a set of steel rails (thus advancing the pipe) by a set of hydraulic jacks. The method can be used to drill earth or rock.

C. Boring

This method consists of pushing the pipe into the fill with a boring auger rotating within the pipe to remove the soil. When augers or similar devices are used for pipe placement, the front of the pipe shall be provided with mechanical

arrangements or devices that will positively prevent the auger and cutting head from leading the pipe so that there will be no unsupported excavation ahead of the pipe. The auger and cutting head arrangement shall be removable from within the pipe in the event an obstruction is encountered. The over-cut by the cutting head shall not exceed the outside diameter of the pipe by more than one-half inch. The face of the cutting head shall be arranged to provide reasonable obstruction to the free flow of soft or poor material.

If an obstruction is encountered during installation that stops the forward action of the pipe, and if it becomes evident that it is impossible to advance the pipe, operations will cease and the pipe shall be abandoned in place and filled completely with grout.

Bored or jacked installations shall have a bore hole essentially the same as the outside diameter of the pipe. Grout any voids that develop. Also grout around the casing pipe when the bore hole diameter is greater than the outside diameter of the pipe by more than 1 inch.

D. Directional Drilling

This process employs a drilling bit that is guided through soil to create a round cavity, which will stay intact with suitable soils and conditions for at least several days. Consequently, soil testing may be required by the Engineer. Test hole and ream as required. The drill head is propelled and remains linked to the rig by adding segments of rod as the head proceeds forward. After the hole has been completed the drill bit is removed and a pulling adaptor is attached to the drilling stem and pipe is secured to the adaptor.

As the adaptor is pulled back to the rig, segments of drill rod are removed. Pipe is either a continuous fused material or segments of restrained pipe are added as the adaptor is pulled back to the rig. The selection of pipe material and restraints, if required must be approved by the Engineer. The process continues until the adaptor returns to the rig and all of the water main is in place.

This process may be employed only if approved by Engineer and governing transportation and or regulating authority). The drilled opening and pipe inserted cannot be less than 3 inches in tolerance. Circulate grout in annular space completely. Alignment and grade must be maintained and the drilled hole must be controllable using steering technology. Use radio equipment to track. Provide report of depth and location at 20 foot intervals during installation and submit as a report.

END OF SECTION

SECTION 02230

STREAM CROSSING

PART 1: GENERAL

1.01 SCOPE

Furnish all labor, materials, and equipment necessary to install the stream crossings as shown on the plans and described in the construction documents.

Install the stream crossings in such a manner as to protect the mains from erosion and to restore, as much as practicable, the stream banks and bottom to their original condition and in compliance with requirements of the regulating agency.

Protect the main from erosion by concrete encasement around the pipe or by a sufficient depth of compacted backfill as shown.

1.02 PROFILES AND TOPOGRAPHY

Contours, topography and profiles of the ground shown on the Drawings are believed to be reasonable approximations and are not guaranteed.

The Contractor accepts the construction site with the conditions that existed at the time of bidding.

1.03 RELATED WORK

Excavation, backfilling and compaction procedures shall conform to Specification Section 2210.

Concrete placement shall conform to Specification Section 3300.

PART 2: PRODUCTS

2.01 MATERIALS

Excavation, fill and concrete materials shall be as specified in Specification Sections 2210 and 3300.

PART 3: EXECUTION

3.01 CONSTRUCTION PROCEDURE

Comply with construction procedures if provided as a condition of the regulators stream opening permit. If methodology is not provided through permitting process, provide and submit the same to the Engineer and all Federal, State and local authorities having jurisdiction over the stream crossing for their review and approval.

3.02 STREAM BANK RESTORATION

Restore the stream banks by backfilling the main trench with mechanically compacted backfill of earth or rip rap, approved by the Engineer and in compliance with regulatory requirements, to the original ground surface (unless new contours are shown on the drawings). The limits of compaction shall extend from the top of bank to top of bank on each side of the crossing as determined by the Engineer or as shown on the detail drawings provided.

Immediately following the completion of a stream crossing, and while stream banks are disturbed, place straw bales or silt-fence along the trench excavation on each stream bank from within two (2) feet of the edge of water to beyond the limits of the excavated trench width per detail on straw bale and fabric fence. Straw bales or silt-fence shall remain in place until after the stream banks have been fine graded, fertilized and seeded, and the seeding has grown sufficiently to protect the stream banks from erosion.

3.03 STREAM BOTTOM RESTORATION

If the plans call for open cut across the stream bottom, backfill the trench within the stream bottom (high water to high water) mechanically compacted earth or riprap that has been approved by the Engineer and meeting regulatory requirements. Rip rap placement must be flush with stream bottoms from upstream to downstream.

END OF SECTION

SECTION 02540

EROSION AND SEDIMENTATION CONTROL

PART 1: GENERAL

1.01 SCOPE OF WORK

Work to be performed under this Specification Section refers to temporary and permanent vegetation covers, mulching, and baling at the construction site and all areas disturbed during construction, including borrow areas. In addition to the requirements of these Specifications, comply with all local Conservation District laws, rules and regulations and all other Federal, State, County and local requirements for erosion and sedimentation control.

1.02 STANDARDS

Comply with the highest erosion and sedimentation control standards, whether Conservation District, Federal, State or local. If in doubt as to the applicable standard, notify the Engineer and comply with the Engineer's directions concerning the prevailing jurisdiction.

PART 2: PRODUCTS

2.01 MATERIALS - GENERAL

All materials such as seeds, mulch, silt fencing and bales shall conform to the Specifications of the local Conservation District and all other applicable Federal, State, County and local requirements.

PART 3: EXECUTION

3.01 GENERAL

A. Submit plan to comply with local regulators and Engineer for approval using established best practices. Construct silt fences, diversion ditches with catch basins and drains as shown on the Plans prior to any other construction activity.

B. Drain the settled water from the catch basins to the natural local drains. Clean the catch basins regularly. After final grading, seed and mulch the area per Specification Sections 1.02 and 2.01.

C. Permanent vegetation cover, mulching, and baling shall be in accordance with the Conservation District specifications and all other applicable Federal, State and local requirements.

END OF SECTION

SECTION 02558

IDENTIFICATION/LOCATION GUIDE

PART 1: GENERAL

1.01 SCOPE

A. Furnish and install identification tape and location wire over the centerline of buried potable water mains, hydrant branches, and trenched services as indicated in this specification or noted in the drawings.

PART 2: PRODUCTS

2.01 LOCATION WIRE

A. Location (Tracer) Wire for Polyvinyl Chloride Pipe, Ductile Iron and HDPE (and other pipe where noted in the drawings) Location wire shall be a direct burial #19 AWG Tin Coated CU,Solid, (.0358'' nominal) 300v, 32 MIL HDPE Jacket, woven polyester & water blocking yarns, 1800# break, 38,500 PSI tensile strength. Blue polyethylene jacket complying with ASTM D1248. The wire shall be continuous except at test stations and valve boxes where the splicing shall be encased with a Neptco Connector No. TS-19-LC, and where splicing is required underground it shall be encased with a Neptco Connector No. TS-19-IL. Wire insulation shall be highly resistant to alkalis, acid and other destructive agents found in soil.

B. Location Wire shall be from Neptco Inc, part number RT1802W or approved equal. For splicing onto a fire hydrant use accessory part number – TS-FHC-IWN and for main line lateral use part number TS-19.

C. With direction bore method the Location Wire shall be installed simultaneously with pullback of the HDPE pipe. Wire shall be taped to the pipe at six (6) foot minimum intervals before installation.

D. Location wire to be terminated at each end of a directional bore crossing within a valve box.

2.02 RESTRAINED JOINT MARKING TAPE

A. Joint restraint tape is specifically to warn Water Company workers/contractors that the water main is joint restrained. It is not to be used in place of regular marking tape.

B. Restrained Joint Marking Tape (for with mains that are restrained joint as directed by the Engineer) shall be polyethylene 4-mill thick and 2 ½-inches wide with blue lettering on white background color and imprinted with the words "RESTRAINED JOINT" every 2 foot. The tape shall have an adhesive backer. The tape shall be highly resistant to alkalis, acid and other destructive agents found in soil.

C. Restrained Joint Marking Tape shall be part number MIAM-010 manufactured by St. Louis Paper & Box Company located at 3843 Garfield, St. Louis, MO 63113 and AA Thread Seal Tape Inc. 1275 Kyle Court Wauconda, Il 60084 or approved equal.

PART 3: EXECUTION

3.01 INSTALLATION OF LOCATION WIRE

A. Install location wire with all buried PVC, HDPE and Ductile Iron water lines in accordance with the manufacturer's installation instructions and as specified in Contract Documents.

B. Install the location wire directly on top of the buried pipe.

C. In all pipe installations loop the location wire up into the valve boxes for connection to a locating device. The wire shall be one continuous piece from valve box to valve box up to 1250 feet maximum.

3.02 INSTALLATION OF RESTRAINED JOINT MARKING TAPE

A. Install the restrained joint marking tape by adhering directly to the pipe as it is installed. The marking tape shall be installed along the entire length of pipe, including around the circumference of the bells of all valves and fittings. The pipe must be free of any foreign matter along the surface of the pipe for the marking tape installation. The restrained joint tape shall be applied on the top ¼ of the pipe barrel and clearly visible through the polyethylene encasement.

B. The tape does not adhere in wet or cold conditions. The tape should be stored in temperatures above 50 degrees F until the time of application and the pipe must be free of frost and moisture along the surface of the pipe that is to receive the tape.

END OF SECTION

SECTION 02610

PAVING AND SURFACING

PART 1: GENERAL

1.01 DESCRIPTION

A. Provide all labor, tools, material and equipment to replace pavement, traffic control loops, pavement stripping, curbs, drives and walks that have been damaged or disturbed during the course of the work, all as specified in contract documents, as directed by the Engineer, or as required by local, state, or federal regulations. Placement will be at least equal to the type of pavement, curb, drive, or walk which existed before the work began and to the satisfaction of the Engineer.

B. Furnish all labor, tools, material, and equipment necessary to spread and roll and/or tamp temporary bituminous pavement, complete, in place, and maintain the same all as specified or as directed by the Engineer

C. During the entire period of construction of the project, keep all streets, curbs, drives and walks in clean, usable, and safe conditions for public use. Keep the work area free from accumulations of waste material, rubbish and other debris resulting from the Work. Clean all roadways daily. Sweep, scrape, shovel or use whatever other approved means, including mechanical pickup sweeper that may be necessary to clean and maintain the roadways to the satisfaction of Owner and the agency having jurisdictional control over said road

D. Before final acceptance and after any trench settlement has been corrected to the satisfaction of the Engineer, replace pavement, curbs, drives and walks designated by the Engineer with the type of replacement specified.

PART 2: PRODUCTS

2.01 MATERIALS

Furnish materials of construction for traffic control loops, pavement stripping, paving, curbing, and surfacing in accordance with applicable Federal, State and local standards. If there is no applicable standards, use materials which will produce a result that is at least equal to the type which existed before the work began and that is to the satisfaction of the Engineer.

PART 3: EXECUTION

3.01 INSTALLATION

A. Saw or line cut the existing pavement, where necessary, as required by local, State or Federal regulations. The edges of the face of the old pavement or base shall be left vertical. Trim ragged edges so as to provide a substantially straight line juncture between the old and new surfaces.

B. Place the pavement replacement so as to conform in grade to the existing streets, drives or sidewalks. The type of pavement replacement shall be as shown on the pavement replacement details in accordance with applicable Federal, State or local standards. If there are no such applicable standards, replacement will be made to the satisfaction of the Engineer.

C. Roll and tamp in place a 2 inch thick (minimum) course of bituminous material over trenches where temporary pavement is ordered. Remove temporary pavement prior to the placing the permanent pavement. The cost shall be included in the contract price. The finished temporary surface shall be flush with the adjacent undisturbed surface. Maintain the temporary bituminous surface until the temporary surface is replaced.

D. Before the completion of each day's work, in traveled areas, pave the pipe trench with 6 inches of stabilized base, unless another method of pavement restoration is required by the authorized governing body. Place final paving over the stabilized base, overlap each side of the trench a minimum of 6 inches, and feather to meet the existing pavement; unless another method of pavement restoration is required by the authorized governing body. Place final pavement at least 20 days and not more than 45 days after the backfilling has been completed, unless otherwise directed by the Engineer.

E. Instead of temporary paving the use of steel roadway plates may be required if an excavation within traveled areas is subject to repeated access prior to backfill/final paving. The use of steel roadway plates shall be in strict accordance all applicable regulations with the Federal, State, County, and/or Local Agency having jurisdiction. Properly secure the steel roadway plates so that they will not be "dragged" from place by a braking truck or "pushed" from place by a snowplow. Submit load bearing calculations, when requested by the Engineer, sealed by a Professional Engineer who is licensed to practice in the applicable State. Calculations must demonstrate that the steel roadway plate is properly designed and installed to accommodate HS-20 vehicular loadings based upon plate dimensions (L x W x T), steel strength, and the size of the excavation (L x W) to be protected.

3.02 MAINTENANCE

Following the certification of completion by the Engineer, maintain the surfaces of curbs and gutters, paved surfaces and sidewalks for a period of one year thereafter, or for such greater period as may be required by Federal, State or local authorities. Supply all material and labor required for such maintenance. The work shall be done in a manner satisfactory to the Owner at no additional cost to the Owner.

END OF SECTION

SECTION 02614

CONCRETE CURBS, DRIVES, AND SIDEWALKS.

PART 1: GENERAL

1.01 SCOPE

The work under this section shall include the installation of all concrete curbs, sidewalks, and drives. Installation will include new installations as required on the drawings, and replacement of all curbs, drives and sidewalks damaged or removed incidental to construction. Adhere to most stringent requirements between local regulations and this specification concerning concrete installations for work performed on property owned by others (the municipality or private owners other than American Water).

PART 2: PRODUCTS

2.01 CONCRETE

A. All concrete shall conform to the following: ASTM C-150 Type I Portland cement, Class A - 3,000 psi; design mix, with a 4-inch ± air-entrained slump ready mixed in accordance with ASTM C-94.

B. Aggregate shall conform to ASTM C-33, which is clean, hard, durable, screened, crushed stone or gravel. The aggregate shall contain no cheat.

2.02 REINFORCEMENT

As needed to meet or exceed existing conditions or as specified in these contract documents.

2.03 CURING COMPOUND

Curing compound shall conform to the specifications of AASHTO M148, Type II, clear, and shall consist of a practically colorless impervious liquid which will thoroughly seal the surface of the concrete and will not impart a slippery surface thereto. The quality and the quantity to be used shall be approved by the Engineer. The use of any material which would impart a slippery surface to the concrete or alter its natural color will not be permitted. The colorless, impervious compound shall contain not less than twenty-five percent (25%) solids. Admixtures applied to concrete with reinforcing steel require review and approval by the Engineer before use.

2.04 PROTECTION

Immediately upon finishing the concrete, the concrete shall be completely covered with plastic or alternate approved by the ENGINEER. Canvas or wetted straw will not be allowed as alternate coverings for curing.

PART 3: EXECUTION

3.01 CURBS

A. All base for the installation shall be thoroughly compacted to support curb installation. Expansion joints should be provided at a minimum of every 12 feet.

B. All new curb installations shall be as shown on the drawings and the detail sheets.

C. All replacement curbs shall be of the same type and thickness as the curb and gutter which it abuts. The grade of the restored curb and gutter shall conform with the grade of the existing adjacent curb and gutter, and installed to insure there is no ponding of water.

3.02 DRIVEWAYS

A. All base for the installation shall be thoroughly compacted and leveled to support the new and replacement installations without settlement. Expansion joints should be provided at a minimum of every 30 feet.

B. All new driveways shall be installed as shown on the plans, and as detailed on the detail sheets.

C. All permanent restoration of driveways shall conform to the construction as originally placed and to the original lines and grades, unless directed otherwise by the ENGINEER.

1. No patching of concrete driveway areas will be allowed between joints or dummy joints.

2. All joints shall be saw cut.

3. In no case shall the thickness of the driveway be less than four inches, with 6x6x6/6 woven wire mesh.

3.03 SIDEWALKS

A. All base for the installation of sidewalks shall be thoroughly compacted and leveled to support the new and replacement installations without settlement. Expansion joints should be provided at a minimum of every 30 feet.

B. All new sidewalks shall be installed as shown on the plans and as detailed on the detail sheets.

1. Sidewalks shall have a minimum thickness of four inches, with 6x6x10/10 wire mesh.
2. All sidewalks shall slope 1/4 inch per foot across the width of the

walk toward the street.

3. The finish shall be a broom finish at right angles to the walkway.

4. Dummy expansion grooves shall be marked on the sidewalk at five foot intervals. The grooves shall be 1/2 inch deep by 3/8 inch in width.

5. Sawed grooves will not be permitted.

C. All permanent restoration of sidewalks shall conform to the manner of construction as originally constructed and placed (brick, block or stone).

1. When concrete sidewalks are replaced, the replacements shall match the existing line and grades, and width.

2. All replacement work shall meet the requirements of new sidewalk construction. No patching will be allowed between joints or dummy joints.

3. If a curing compound is employed, it shall be applied per the manufacturer's direction and at a recommended rate of application. If unknown, it shall be applied at 1 gallon (3.79 liters) per 200 square feet (18.58 square meters) for each coat. Surfaces damaged by construction operations during curing shall be resprayed at the same rate.

3.04 PAVED SIDE DITCH

A. All base for the installation shall be thoroughly compacted and leveled to support the new and replacement installations without settlement.

B. All new side ditch shall be installed as shown on the plans, and as detailed on the detail sheets.

C. All permanent restoration of side ditch areas shall conform to the construction as originally placed and to the original lines and grades in accordance with the current appropriate state transportation department guidelines.

1. No patching of concrete side ditches will be allowed between joints or dummy joints.

2. All joints shall be saw cut.

3.05 PROTECTION

All concrete work shall be protected by barricades, lights, etc. to protect the concrete until set-up.

END OF SECTION

SECTION 02820

LAWN RESTORATION

PART 1: GENERAL

1.01 DESCRIPTION

Restore and replace shrubbery, fencing, or other disturbed surfaces or structures to conditions equal to that before the work began and to the satisfaction of the Engineer.

PART 2: PRODUCTS

2.01 TOPSOIL

Topsoil shall not contain more than 40 percent clay in that portion passing a No. 10 sieve. Topsoil shall contain between 5 percent and 20 percent organic matter as determined by loss on ignition of samples oven-dried to constant weight at 212 degrees Fahrenheit.

2.02 FERTILIZER

Fertilizer shall be lawn or turf grade 12-12-12 or as determined by the Engineer.

2.03 SEED AND SOD

A. Lawn Areas

Seed areas where lawns are or have been regularly maintained, whether residential, commercial or office areas, in accordance to a submittal that matches the existing grass as close as possible or as required by the Soil Conservation District or other governing authority.

Forty Five days prior to lawn restoration submit a detailed Lawn Restoration Plan that is specific for the time of year, locations, and meets regulatory requirements.

Where sod is required it shall be green, freshly cut, and of good quality with grass free from all noxious weeds. It shall contain all the dense root system of the grass and shall not be less than 1-1/2 inches thick.

B. All other Areas

Included a section in the Lawn Restoration Plan subtitled “All Other Areas” and detail a plan for such areas that is specific for the time of year, locations, and meets regulatory requirements.

2.04 MULCH

Mulch shall be straw reasonably free of weed seed and foreign materials which may affect plant growth. Other materials may be used if approved by the Engineer.

2.05 ASPHALT EMULSION

Emulsion shall be non-toxic to plants and shall conform to AASHTO M140 or AASHTO M208.

PART 3: EXECUTION

3.01 PREPARATION OF SEED BED

A. Topsoil Areas

Removed, store, and use suitable topsoil available from the excavated material to backfill the top 4 inches of the excavation. Remove and dispose of all imported granular fill, grass, weeds, roots, sticks, stones, and other debris 1-inch or greater in diameter. Bring the topsoil to the finished grade by raking.

B. Non-Topsoil Areas

When there is insufficient topsoil available from the site excavated materials, furnish 4 inches of topsoil to be used as a seed bed in lawn areas as described in Part 2.03, Paragraph A of this Specification Section.

The trench backfill may be used as a seed bed, where approved by the Engineer. After the backfill has been given a reasonable time to settle, grade it off to the finished grade and harrow to a depth of 3 inches. Remove and dispose of all grass, weeds, roots, sticks, stones and other debris 1 inch or greater in diameter. Carefully bring the topsoil to the finished grade by raking.

3.02 FERTILIZING

Apply fertilizer uniformly to all areas to be seeded at the rate of 1 pound per 100 square feet in topsoil and 2 pounds per 100 square feet in non-topsoil or according to the manufacture's recommendations which ever is greater. Disk, harrowed, or raked the fertilizer thoroughly into the soil to a depth of not less than 2 inches. Immediately before sowing the seed, rework the surface until it is a fine, pulverized, smooth seed bed varying not more than 1 inch in 10 feet.

3.03 SEEDING

Seed immediately after preparation and fertilization of the seed bed. Mix the seed thoroughly and sow it evenly over the prepared areas at the rate of 3 pounds per

1,000 square feet. Sow the seed dry or hydraulically. After sowing, rake or drag the area to cover the seed to a depth of approximately 1/4 inch

Sod all areas with slopes greater than 10% unless otherwise noted on the drawings. The Contractor may submit other methods in the Lawn Restoration Plan that are more economical.

3.04 SODDING

Sod all areas as noted in the drawings. As a minimum, sod shall be fibrous, well rooted approved grass type. The grass shall be cut to a height of less than three (3) inches. Edges of sod shall be cleanly cut, either by hand or machine, to a uniform thickness of not less than one and one-half (1-½) inches, to a uniform width of not less than sixteen (16) inches, and in strips of not less than three (3) feet in length. Sod shall be free from all primary noxious weeds as defined by the applicable State Seed Law.

Lay sod with tight staggered joints. On slopes, start placement at the foot of the incline. Use wood pegs driven flush to hold sod in place on slopes 4:1 or greater. Use two wood pegs per strip of sod. Roll the sod lightly after placement. Fill any open joints with topsoil and/or sod.

3.05 MULCHING

Place mulching material evenly over all seeded areas within 48 hours of seeding. Place mulch at the rate of approximately 2 tons per acre, when seeding is performed in recognized growing season and at the approximate rate of 3 tons per acre when seeding is performed in a recognized non-growing season if applicable.

3.06 EMULSION

Keep mulching materials in place with asphalt emulsion applied at a minimum rate of 60 gallons per ton of mulch or by other methods approved by the Engineer. When mulch is displaced, immediately repair any damage to the topsoil and fertilizer, re-seed, and re-mulch per the requirements of this Specification Section.

3.07 MAINTENANCE

Carefully maintain, tend, and water all seeded and sodden areas necessary to secure a good turf. Fill, grade, and reseed or re-sod all areas that have settled. Maintain the condition of the seeded areas in accordance with the requirements of this Specification Section. Maintain the condition of the restored areas of vegetation in accordance with the requirements of this Specification Section for a period of one year from the date of final completion.

END OF SECTION

SECTION 03300

CAST-IN-PLACE CONCRETE

PART 1: GENERAL

1.01 SCOPE OF WORK

Provide concrete for thrust blocking, manhole bases, pipe encasement, curbs, sidewalks and pavement in accordance with this Specification Section.

PART 2: PRODUCTS

2.01 MATERIALS

A. Portland Cement shall be Type I or Type III and conform to "Specification for Portland Cement" ASTM C150.

B. Air-Entraining Agent from approved manufacturer shall be added in accordance with manufacturer's directions to the normal Portland cement to entrain 4½ percent air ± 1 percent with all other ingredients and strength as specified. Air-entraining admixtures shall conform to "Specifications for Air-Entraining Admixtures for Concrete" ASTM C260.

C. Concrete Aggregates shall conform to "Specifications for Concrete Aggregates" ASTM C33. Coarse aggregates shall be a maximum of 1½ inches in size in footings and plain concrete. Pea gravel shall be used for sections 3 inches or less in thickness.

D. Water used in mixing concrete shall be clean and free from injurious amounts of oils, acids, alkalis, organic materials, or other deleterious substances. In effect, the water used shall be potable water.

E. Reinforcing Bars shall be billet steel grade (60,000 psi minimum yield) conforming to the requirements of ASTM A615, Grade 60. Reinforcing bars shall be new stock, free from rust, scale, or other coatings that tend to destroy or reduce bonding.

F. Welded Wire Mesh shall conform to "Specifications for Welded Steel Wire Fabric for Concrete Reinforcements" ASTM A185.

G. Premolded Expansion Joint Material shall be provided where shown on the Drawings or directed by the Engineer. This non-extruding compressible joint material shall conform to the requirements of "Preformed Expansion Joint Fillers for Concrete Paving and Structural Construction", ASTM D1751.

2.02 CONCRETE MIXES

Ready-mixed concrete shall conform to "Specifications for Ready-Mixed Concrete", ASTM C94.

A. All concrete mixes shall produce a dense durable concrete. The minimum 28 day compressive strength of the concrete shall be:

B. 3,000 psi - thrust blocking, sidewalks, curbs and pipe encasement. 4,000 psi - manhole bases and road pavement

C. Water/cement ratio for the concrete shall not exceed a maximum as shown in Table 4.4 of the ACI Standard 318 latest edition, Building Code Requirements For Reinforced Concrete, when strength data from field experience or trial mixtures are not available. A workable concrete with minimum slump of 3 inches and a maximum slump of 5 inches shall be produced without exceeding the water/ cement ratio.

PART 3: EXECUTION

3.01 FORMWORK

A. Build all forms mortar tight and of sufficient rigidity to prevent distortion due to the pressure of the concrete and other loads incidental to the construction operations. Construct and maintain forms so as to prevent warping and the opening of joints.

B. The forms shall be substantial and unyielding. Design the forms so that the finished concrete conforms to the proper dimensions and contours. Design the forms to take into account the effect of the vibration of concrete during placement.

3.02 PLACING REINFORCING STEEL

A. Place all steel reinforcement accurately in the positions shown on the plans. Secure the steel reinforcements firmly in place during the placing and setting of concrete. When placed in the work, it shall be free from dirt, detrimental rust, loose scale, paint, oil or other foreign material. When spacing between crossing tiebars is one foot more, tie all bars at all intersections. When spacing is less than one foot in each direction tie alternate intersections of bars.

B. Maintain distances from the forms by means of stays, blocks, ties, hangers or other approved supports. Continuous high chairs will not be permitted. Furnish all reinforcement in full lengths as indicated on the plans. Splicing of bars will not be permitted without the approval of the Engineer, except where shown on the plans. Stagger splices as far apart as possible. Unless otherwise shown on the plans, bars shall be lapped 36 diameters to make the splice.

C. Lap welded wire mesh at least 1½ meshes plus end extension of wires but not less than twelve (12) inches in structural slabs. Lap welded wire mesh at least ½ mesh plus end extension of wires but not less than six (6) inches in slabs on the ground.

3.03 CONVEYING AND PLACING CONCRETE

A. Convey concrete from the mixer to the forms as rapidly as practical by approved methods which will prevent segregation and loss of ingredients.

B. Clean formwork of dirt and construction debris, drain water, and remove snow and ice. After the forms have been inspected, deposit the concrete in approximately horizontal layers to avoid flowing along the forms. Place all concrete in the dry free from standing water. Deposit all concrete continuously or in layers of a thickness such that no concrete will be deposited on concrete which has hardened sufficiently to cause the formation of seams and planes of weakness within the sections. Place the concrete to create a monolithic structure the component parts of which are securely bonded together. Compact the concrete during placement by suitable means. Work the concrete around the reinforcement and embedded fixtures and into corners and angles of forms, taking care to avoid overworking which may result in segregation.

C. Do not drop concrete into forms from a height greater than 5 feet. Use a spout to deposit concrete from a greater height; or, provide openings in the forms limit the height of drop. Obtain the approval of the Engineer before using any other method of placing concrete from a height greater than 5 feet.

D. Direct concrete through chutes to prevent it from striking reinforcement or sides of the form above the level of placement. Avoid segregation and coating of the surfaces with paste which may dry before concrete reaches its level.

E. Submit a concrete mix design to the Engineer for approval prior to placing any concrete by pumping.

3.04 THRUST BLOCKING

A. See the thrust blocking details. Notify the Engineer whenever field conditions are noted which are more restrictive than the thrust block design data included on detail drawing 0201-0601-SD6.

B. Construct blocking against the vertical face of undisturbed earth or sheeting left in place. Prevent the concrete from enclosing more than half the circumference of the pipe unless it is a straddle block. Keep the concrete away from joints or bolts in the piping.

C. If thrust blocks are employed, place thrust blocking for hydrants to allow the hydrant to drain.

3.05 PLACING CONCRETE IN COLD WEATHER

A. Follow the provisions of ACI 306, ACI 308 and Paragraph 3.8 when the ambient temperature is less than 40°F at time of placement or expected to be less than 40°F during the curing period.

B. Control concrete setting time with the use of accelerating admixtures as required to facilitate placing and finishing operations. Do not use calcium chloride in excess of 2% by weight in the concrete free of steel reinforcement. Where steel reinforcement is employed and concrete with calcium chloride is permitted, contractor must use galvanized or coated steel satisfactory to the Engineer.

C. Exposed subgrade, formwork and reinforcing shall be warmer than 33°F prior to placement of concrete.

D. The temperature of the concrete during placing shall be between 55°F and 75°F. Maintain the temperature of the concrete between 55°F and 75°F for a minimum of 5 days by providing insulating blankets, heated enclosures, or other methods of thermal protection. Provide a means of maintaining atmospheric moisture when dry heat is used. Provide proper curing for a minimum of 5 days or as approved by the Engineer.

E. In case of low air temperatures (below 40°F), submit a plan to comply with this section. The Engineer may, at their discretion, raise the minimum limiting temperatures for water, aggregates and mixed concrete when temperatures drop below 40°F.

F. Protect all earth supported concrete from damage due to frost heave.

END OF SECTION

SECTION 03450

PRECAST CONCRETE MANHOLE

PART 1: GENERAL

1.01 SCOPE

Furnish all labor, materials, tools and equipment necessary to do all work required to install manholes as indicated on the Drawings and as specified in this Specification Section.

1.02 SUBMITTALS

Submit shop drawings or manufacturer's literature to the Engineer for approval.

PART 2: PRODUCTS

2.01 MANHOLE SECTIONS

Manhole riser sections shall be designed, manufactured, tested, finished and marked in accordance with the Drawings and ASTM C478, "Precast Reinforced Concrete Manhole Sections".

2.02 BRICK

Brick used to bring manhole to grade shall comply with ASTM C62, Grade SW.

2.03 LADDER

For heavy duty traffic manholes specified in section 2.04, ladder rungs shall be provided in accordance with OSHA regulations. Ladder up shall be installed to meet OSHA requirements. Rungs shall have a minimum diameter of 1-inch and 10-inch clear tread width and be of the drop front design. Rungs shall be polypropylene coated ½ inch grade 60 deformed rebar by Lane International Corporation, M.A. Industries, or approve equal.

2.04 FRAME AND COVER

For areas of heavy duty traffic or as noted on plans (flush mount), manhole frame with vented lid shall be Neenah Foundry Company's R-1752 Series Heavy Duty (36” round). For non traffic areas with limited traffic (flush mount) Bilco’s J-4H2O Series Floor, Vault and Sidewalk Door shall be used (36”square). For areas of non traffic (mounted 8-12” above the surrounding surface). Bilco’s J-4H2O Series Floor, Vault and Sidewalk Door shall be used (36” square).

PART 3: EXECUTION

3.01 HANDLING

Lift and move all precast manhole components using suitable lifting slings and plugs that will not damage the precast manhole lip.

Thoroughly repair all damage to precast sections in the presence of the Engineer. Repair and patch minor breaks by chipping and scarifying the defective area before applying grout. All sufficient curing time before the precast sections are put together. Form and key concrete cast-in-place bases specially to accommodate the bottom precast section.

3.02 INSTALLATION

Unless otherwise noted in the drawings, rest and support manhole bases uniformly on a 6-inch mat of compacted crushed stone or gravel placed over a base of sound, level, undisturbed earth.

Before placing concrete base, set the downstream and upstream pipes to proper grade so the pipe ends will be flush with the inside of the manhole.

Set the pipes securely in the opening of the precast sections of manholes and grout at the correct line and grade. There shall be at least a one-half inch clearance between the outside of the pipe and the manhole opening to insure proper grouting. Clean the pipe and base thoroughly before the grout is applied.

Bring the top of all precast manholes to proper grade for receiving manhole frames. If proposed grade is to be flush to existing grade, the top of the manhole ring and cover shall be within 1” of surrounding grade. If proposed grade is to be above existing grade, the top of the manhole ring and cover shall be between 8-12 inches of surrounding grade unless otherwise noted on the plans.

END OF SECTION

SECTION 15000

PIPING - GENERAL PROVISIONS

PART 1: GENERAL

1.01 DRAWINGS

Dimensions shown on Contract Drawings are approximate only. Verify all piping geometry in the field and to ensure proper alignment and fit of all piping consistent with the intent of the Contract Drawings. Submit field layout drawings as required for approval.

1.02 RELATED WORK

See Specification Section 01600.3.03 - Responsibility for Material and Equipment.

PART 2: PRODUCTS

2.01 CONTRACTOR'S RESPONSIBILITY FOR MATERIAL

A. Examine all material carefully for defects. Do not install material which is known, or thought, to be defective.

B. The Engineer reserves the right to inspect all material and to reject all defective material shipped to the job site or stored on the site. Failure of the Engineer to detect damaged material shall not relieve the Contractor from his total responsibility for the completed work if it leaks or breaks after installation.

C. Lay all defective material aside for final inspection by the Engineer. The Engineer will determine if corrective repairs may be made, or if the material is rejected. The Engineer shall determine the extent of the repairs.

D. Classify defective pipe prior to Engineer's inspection as follows:

1. Damage to interior and/or exterior paint seal coatings.
2. Damage to interior cement-mortar or epoxy lining.
3. Insufficient interior cement-mortar lining or epoxy thickness.
4. Excessive pitting of pipe
5. Poor quality interior and exterior paint seal coat.
6. Pipe out of round.
7. Pipe barrel area damaged to a point where pipe class thickness is reduced.
8. Denting or gouges in plain end of pipe.
9. Excessive slag on pipe affecting gasket seal
10. Any visible cracks and holes
11. Embedded foreign materials

12. Non-uniform color, density, and any other physical properties along the length of pipe.

E. The Contractor shall be responsible for all material, equipment, fixtures, and devices furnished. These materials, equipment, fixtures and devices shall comply with the requirements and standards of all Federal, State, and local laws, ordinances, codes, rules, and regulations governing safety and health. Only pipe manufactured in the United State of America will be accepted unless approved by the Engineer.

F. Take full responsibility for the storage and handling of all material furnished until the material is incorporated in the completed project and accepted by the Engineer. Contractor shall be solely responsible for the safe storage of all material furnished to or by him until incorporated in the completed project and accepted by the Engineer.

G. Load and unload pipe, fittings, valves, hydrants and accessories by lifting with hoists or skidding to avoid shock or damage. Do not drop these materials. Pipe handled on skidways shall not be skidded or rolled against other pipe. Handle this material in accordance with AWWA C600, C605 or C906 whichever is applicable.

H. Drain and store fittings and valves prior to installation in such a manner as to protect them from damage due to freezing of trapped water. Drain, store, and protect fittings and valves in accordance with Specification Section 01600.

2.02 PETROLATUM TAPE COATING

A. The tape coating shall be a cold applied, saturant tape made from either petrolatum or petroleum wax and a noncellulosic synthetic fiber fabric. The fabric shall be encapsulated and coated on both sides with the petrolatum or petroleum wax. The thickness of the tape shall be no less than 40 mil. The petrolatum or petroleum wax shall be at least 50% of the product by weight.

B. The tape coating shall be supplied in sheets, pads or rolls. Pads and sheets shall be sized to fit the area that is to be covered, allowing for an overlap per AWWA Standards.

2.03 RUBBERIZED-BITUMEN BASED SPRAY-ON UNDERCOATING

Subject to approval by the ENGINEER, an alternative corrosion protection for exposed buried metal is an aerosol applied rubberized coating. The material shall be rapid dry and specifically designed for corrosion protection. 3M Rubberized Underseal Undercoating 08883 or any equivalent rubberized-bitumen based spray-on undercoating may be used. Follow manufacturer's recommendations for storage and application.

PART 3: EXECUTION

3.01 INSTALLATION - GENERAL REQUIREMENTS

A. Lay and maintain all pipe to the required lines and depths. Install fittings, valves and hydrants in strict accordance with the Specifications at the required locations with joints centered, spigots home, and all valve and hydrant stems plumb. Do not deviate from the required alignment, depth or grade without the written consent of the Engineer.

B. Buried steel lugs, rods, brackets, and flanged joint nuts and bolts are not permitted unless specifically shown on the drawings or approved in writing by the ENGINEER. Cover any and all buried steel lugs, rods, brackets, and flanged joint nuts and bolts with approved coating in accordance with AWWA Standard C217 prior to backfilling or, where approved, alternative rubberized-bitumen material. Encase the same in polyethylene encased if the specifications require polyethylene encasement of the pipe.

C. Lay all pipe to the depth specified. Measure the depth from the final surface grade to the top of the pipe barrel. The minimum pipe cover shall be as shown on the Drawings or as specified in the Section 01011 Specifications Special Conditions.

D. Do not lay pipe in a wet trench, on subgrade containing frost, or when trench conditions are unsuitable for such work. If all efforts fail to obtain a stable dry trench bottom and the Engineer determines that the trench bottom is unsuitable for such work, the Engineer will order the kind of stabilization to be constructed, in writing. In all cases, water levels must be at least 6” below the bottom of the pipe. See section 02020, Dewatering.

E. Thoroughly clean the pipes and fittings before they are installed. Keep these materials clean until the acceptance of the completed work. Lay pipe with the bell ends facing in the direction of laying, unless otherwise shown on the Drawings, or directed by the Engineer. Exercise care to ensure that each length abuts the next in such a manner that no shoulder or unevenness of any kind occurs in the pipe line.

F. Do not wedge or block the pipe during laying unless by written order of the Engineer.

G. Before joints are made, bed each section of pipe the full length of the barrel, at the required grade, and at the invert matching the previously laid pipe. Dig bell holes sufficiently large to permit proper joint making. Do not bring succeeding pipe into position until the preceding length is embedded and secure in place.

H. Take up and relay pipe that is out of alignment or grade, or pipe having disturbed joints after laying. Take up, such in-place pipe sections found to be defective and replace them with new pipe. Take up, relaying, and replacement will be at the Contractor's expense.

I. Place enough backfill over the center sections of the pipe to prevent floating. Take all other necessary precautions to prevent the floating of the pipeline by the accumulation of water in the trench, or the collapse of the pipeline from

any cause. Place enough backfill over the center sections of the pipe to prevent floating. Should floating or collapse occur, restoration will be at the Contractor's expense.

J. Bedding materials and concrete work for the pipe bedding and thrust restraint shall be as specified in Divisions 2, 3, and 15 as well as detail drawings.

K. Prevent foreign material from entering the pipe while it is being placed. Do not place debris, tools, clothing, or other materials in the pipe during laying operations. Close all openings in the pipeline with watertight plugs when pipe laying is stopped at the close of the day's work, or for other reasons such as rest breaks or meal periods.

L. Only cut pipe with equipment specifically designed for cutting pipe such as an abrasive wheel, a rotary wheel cutter, a guillotine pipe saw, or a milling wheel saw. Do not use chisels or hand saws. Grind cut ends and rough edges smooth. Bevel the cut end slightly for push-on connections as per manufacturer recommendations.

M. In distributing material at the site of the Work, unload each piece opposite or near the place where it is to be laid in the trench. If the pipe is to be strung out, do so in a straight line or in a line conforming to the curvature of the street. Block each length of pipe adequately to prevent movement. Block stockpiled pipe adequately to prevent movement. Do not place pipe, material, or any other object on private property, obstructing walkways or driveways, or in any manner that interferes with the normal flow of traffic.

N. Exercise special care to avoid damage to the bells, spigots or flanged ends of pipe during handling, temporary storage, and construction. Replace damaged pipe that cannot be repaired to the Engineer's satisfaction, at the Contractor's expense.

O. Remove all existing pipe, fittings, valves, pipe supports, blocking, and all other items necessary to provide space for making connections to existing pipe and installing all piping required under this Contract.

P. Maintain the minimum required distance between the water line and other utility lines in strict accordance with all Federal, State, and local requirements and all right-of-way limitations.

Q. Provide and install polyethylene encasement for ductile iron pipe as required by the Drawing or Section 01011 Specification Special Conditions. See Specification Section 15130 or 15131, as applicable.

R. The maximum allowable deflection at the joints for Ductile Iron push-on joint pipe shall be the lesser of manufacturer’s recommendations or as described in the DIPRA Guideline, *Ductile Iron Pipe Joints and Their Uses*, as follows:

Size of Pipe	Deflection Angle	Maximum Deflection (18-ft. Length)	(20-ft. Length)
3”-12"	4 degrees	15”	17"

S. Use short lengths of pipe (minimum length 3 feet, no more than three short sections), when approved by the Engineer, to make curves that cannot be made with full length sections of pipe without exceeding the allowable deflection. Making these curves will be at no additional cost to the Owner.

T. Furnish air relief valve assemblies in accordance with detail drawings provided or as specified in the Section 01011 Specification Special Conditions section. Engineer will provide standard detail for additional air release valve assemblies. Any deviation from the standard detail proposed by contractor must be approved in advance.

U. Exercise particular care so that no high points are established where air can accumulate. Install an air release valve and manhole, as extra Work to the Contract, when the Engineer determines that unforeseen field conditions necessitate a change in the pipe profile that requires the installation of an air release valve and manhole. If the Contractor requests a change in the pipe profile solely for ease of construction, and the requested change requires the installation of an air release valve and manhole as determined by the Engineer, the cost of furnishing and installing the air release valve and manhole will be at the expense of the Contractor.

3.02 CONSTRUCTION METHODS TO AVOID CONTAMINATION

A. Heavy particulates generally contain bacteria and prevent even very high chlorine concentrations from contacting and killing such organisms. It is essential that the procedures of this Specification Section be observed to assure that a water main and its appurtenances are thoroughly clean for the final disinfection by chlorination.

B. Take precautions to protect the interior of pipes, fittings, and valves against contamination. String pipe delivered for construction so as to keep foreign material out of the pipe. Close all openings in the pipeline with watertight plugs when pipe laying is stopped at the close of the day's work or for other reasons, such as rest breaks or meal periods. Use rodent-proof plugs approved by Engineer, where it is determined that watertight plugs are not practical and where thorough cleaning will be performed.

C. Delay in placement of delivered pipe invites contamination. The more closely the rate of delivery is correlated to the rate of pipe laying, the lower the likelihood of contamination. Complete the joints of all pipe in the trench before stopping work. If water accumulates in the trench, keep the plugs in place until the trench is dry.

D. When encountering conditions on pre-existing pipe that requires packing, employ yarning or packing material made of molded or tubular rubber rings, or rope of treated paper or other approved materials. Do not use materials such as jute, asbestos, or hemp. Handle packing material in a manner that avoids contamination.

E. Do not use contaminated material or any material capable of supporting prolific growth of microorganisms for sealing joints. Handle sealing material or gaskets in a manner that avoids contamination. Use a mild bleach solution to clean the gasket and bell. The lubricant used in the installation of sealing gaskets shall be suitable for use in potable water. Deliver the lubricant to the job in new closed containers and keep it clean.

F. If dirt enters the pipe, and in the opinion of the Engineer the dirt will not be removed by the flushing operation, clean the interior of the pipe by mechanical means, then swab with a 1% hypochlorite disinfecting solution. Clean using a pig, swab, or "go-devil" only when the Engineer has specified such and has determined that such operation will not force mud or debris into pipe joint spaces.

G. If the main is flooded during construction, the flooded section must be isolated from the remainder of the installation as soon as practical. Submit a plan to the Engineer on correcting the condition and do not proceed until authorized by the Engineer. Replace or fully clean and disinfect the affected pipe at no additional cost to the Owner. The contractor shall pay for the additional inspection costs for the rework.

3.03 VALVE INSTALLATION

A. Prior to installation, inspect valves for direction of opening, freedom of operation, tightness of pressure containing bolting, cleanliness of valve ports and especially of seating surfaces, handling damage, and cracks. Correct defective valves or hold for inspection by the Engineer.

B. Set and join to the pipe in the manner specified in Specification Section 3.01. Provide valves with adequate support, such as crushed stone and concrete pads, so that the pipe will not be required to support the weight of the valve. Set truly vertical. After field installation of the valve all exposed ferrous restraint materials and external bolts except the operating nut shall receive a layer of petrolatum tape coating or, where approved, rubberized-bitumen based spray-on undercoating applied before backfill. If polyethylene is applied to the pipe, the entire valve shall be encased in polyethylene encasement prior to backfill. The polyethylene encasement shall be installed up to the operating nut leaving the operating nut exposed and free to be operated.

C. Provide a valve box for each valve. Set the top of the valve box neatly to existing grade, unless directed otherwise by the Engineer. Do not install in a way that allows the transfer shock or stress to the valve. Center and plumb

the box over the wrench nut of the valve. Do not use valves to bring misaligned pipe into alignment during installation. Support pipe in such manner as to prevent stress on the valve. See Standard Detail 0201-0601-SD59 for a typical valve box installation detail.

D. Provide valve marking posts, when authorized by the Owner, at locations designated by the Engineer and in accordance with the drawings.

3.04 THRUST RESTRAINT

A. Provide all plugs, caps, tees, reducers, and bends (both horizontal and vertical) with concrete thrust blocking and/or restrained joint pipe as represented on the Drawings, or specified in the Section 01011 Specifications Special Conditions.

B. Place concrete thrust blocking between undisturbed solid ground and the fitting to be anchored. Install the concrete thrust blocking in accordance with Specification Section 03300 and standard details provided. Locate the thrust blocking to contain the resultant thrust force while keeping the pipe and fitting joints accessible for repair, unless otherwise shown or directed.

C. Provide temporary thrust restraint at temporary caps and plugs. Submit details of temporary restraint to the Engineer for approval.

D. At connections with existing water mains where there is a limit on the time the water main may be removed from service, use metal harnesses of anchor clamps, tie rods and straps; mechanical joints utilizing set-screw retainer glands; or restrained push-on joints as permitted by Engineer. No restraining system can be installed without the approval of the Engineer. Submit details of the proposed installation to the Engineer for approval. For pipe up to 12 inches in size, use a minimum of two 3/4-inch tie rods. If approved for use, install retainer glands in accordance with the manufacturer's instructions. Material for metal harnessing and tie-rods shall be ASTM A36 or A307, as a minimum requirement.

E. Protection of Metal Harnessing: Protect ties rods, clamps and other metal components against corrosion by hand application of petrolatum tape and by encasement of the entire assembly with 12 mil polyethylene film in accordance with AWWA C105. Apply tape on all exposed tie rods prior to installing polyethylene.

3.05 TYPICAL INSTALLATION DETAILS

The list of Standard Details listed below are attached to the specification 01010.

END OF SECTION

SECTION 15020

DISINFECTING PIPELINES

PART 1: GENERAL

1.01 SCOPE OF WORK

Flush and disinfect all pipelines installed under this Contract if indicated in the summary of work. This would include furnishing the necessary labor, tools, transportation, and other equipment for the operation of valves, hydrants, and blowoffs during the chlorination. Install, and if directed remove, all chlorination taps required for disinfection. The cost of this work shall be included in the bid item for pipe installation. The disinfection will be performed under the supervision of Owner.

1.02 WORK BY OWNER

The Owner reserves the option to provide/furnish the chlorine and chlorination equipment. The Owner will furnish water for testing, flushing and disinfecting pipelines. The Owner will also perform bacteriological testing.

1.03 PROTECTION

Chlorine disinfection and dechlorination shall be under the direct supervision of someone familiar with the physiological, chemical, and physical properties of the form of chlorine used. They shall be trained and equipped to handle any emergency that may arise. All personnel involved shall observe appropriate safety practices to protect working personnel and the public.

The forwards of AWWA Standards B300 and B301 contain information and additional reference material regarding the safe handling of hypochlorites and liquid chlorine. The Contractor shall familiarize himself with this information prior to performing any disinfection work.

1.04 RELATED WORK

Observe the precautions described in Specification Section 15000 to avoid contamination during installation of the pipeline.

PART 2: PRODUCTS

2.01 MATERIALS AND EQUIPMENT

A. Furnish aqueous chlorine, sample corporations, injection equipment, chlorine residual testing equipment, chlorine residual neutralizing equipment, chlorine neutralizing chemical, sodium hypochlorite (bleach) and calcium hypochlorite (HTH) as needed to disinfect, neutralize the chlorine residual, and sample all pipelines and appurtenances.

B. Liquid chlorine contains 100% available chlorine and is packaged in steel containers, usually of 100 lb, 150 lb, or 1 ton net chlorine weight. Liquid chlorine is to be furnished in accordance with AWWA B301.

C. Calcium hypochlorite is available in granular form or in approximately 5-g tablets, and contains approximately 65% available chlorine by weight. The material should be stored in a cool, dry, and dark environment to minimize its deterioration. Do not use calcium hypochlorite intended for swimming pool disinfection, as this material (containing trichloroisocyanuric acid) has been sequestered and is extremely difficult to eliminate from the pipe after the desired contact time had been achieved.

D. Calcium hypochlorite must conform to AWWA B300.

PART 3: EXECUTION

3.01 PREPARATION

All pipelines shall be pressure and leak tested, flushed, and cleaned of debris and dirt prior to application of the disinfectant. Flushing shall continue until the volume in the newly installed main has turned over at least one time unless the Engineer determines that conditions do not permit the required volume to be safely discharged to waste.

3.02 APPLICATION OF DISINFECTANT

Methods to be used for disinfection are those detailed in ANSI/AWWA C651 Disinfecting Water Mains.

3.03 WATER MAINS

Two (2) methods of chlorination are described below. Disinfection shall be done in accordance with AWWA Standard C651-14 with the exception of the 16 hour holding period for sample collections is **not permitted**. Samples shall be collected with a 24 hour holding period between each sample set. The tablet method cited in the AWWA standard is not approved for use.

A. Continuous Feed Method

1. Set up

The continuous feed method consists of completely filling the main to remove all air pockets, flushing the completed main to remove particulates, and then refilling the main with chlorinated potable water. The potable water shall be chlorinated, so that after a 24-hour holding period in the main, there will be a free chlorine residual of not less than 10 mg/L in collected samples.

Chlorine can be applied in advance of preliminary flushing by swabbing joints with bleach. In any such case, the contractor shall make sure and take appropriate action to make sure that the flushed water is dechlorinated.

Preliminary flushing. Prior to being chlorinated, fill the main to eliminate air pockets and flush to remove particulates. Neutralize the chlorine residual of the water being disposed of in accordance with Section 15020.3.04. B, C, D, and E. The flushing velocity in the main shall be not less than 3.0 fps unless the Engineer determines that conditions do not permit the required flow to be discharged to waste. Flushing shall continue until the volume in the newly installed main has turned over at least one time. Table 1 shows the rates of flow required to produce a velocity of 3.0 fps in pipes of various sizes.

NOTE: Flushing is no substitute for preventive measures during construction. Certain contaminants such as caked deposits resist flushing at any feasible velocity.

TABLE 1
Required Flow and Openings to Flush Pipelines
(40 psi Residual Pressure in Water Main)*

Pipe Diameter (inches)	Flow Required to Produce 3.0 fps Velocity in Main (gpm)	Size of Tap (inches) 1	1-1/2	2	Number of 2-1/2 in. Hydrant Outlets to Use
		Number of Taps on Pipe†			
4	120	1	-	-	1
6	260	-	1	-	1
8	470	-	2	1	1
10	730	-	3	2	1
12	1060	-	-	2	2
16	1880	-	-	4	2

*With a 40 psi pressure in the main with the hydrant flowing to atmosphere, a 2½-inch hydrant outlet will discharge approximately 1,000 gpm and a 4½-inch hydrant outlet will discharge approximately 2,500 gpm.

† Number of taps on pipe based on discharging through 5 feet of galvanized iron pipe with one 90 degree elbow.

In mains of 24-inches or larger diameter, an acceptable alternative to flushing is to broom-sweep the main, carefully removing all sweepings prior to chlorinating the main.

2. Chlorinating the Main.

a. Flow water from the existing distribution system or other approved source of supply at a constant, measured rate into the newly laid water main. In the absence of a meter, approximate the rate by placing a pitot gauge in the discharge or measuring the time to fill a container of known volume.

b. At a point not more than 10 feet downstream from the beginning of the new main, dose the water entering the new main with chlorine

fed injection at a constant rate such that the water will have not less than 25 mg/L free chlorine. Provide an injection quill that distributes the concentrated solution to the center of the flow in the main. Provide and install corporations to measure the chlorine concentration at not more than 1200ft intervals including one within 10ft of the point of initial injection to ensure that this concentration is provided. Measure chlorine in accordance with the procedures described in the current edition of the AWWA Manual M12 or of *Standard Methods for the Examination of Water and Wastewater*.

c. Table 2 gives the amount of chlorine required for each 100 feet of pipe of various diameters. Solutions of 1 percent chlorine may be prepared with calcium hypochlorite and the table indicates the appropriate amount of the 65% calcium hypochlorite. If using other concentrations of calcium hypochlorite, a properly adjusted weight must be used. A 1 percent chlorine solution requires 1 pound of calcium hypochlorite in 8 gallons of water.

TABLE 2
Chlorine and Hypochlorite Required to Produce 25 mg/L
Concentration in 100 feet of Pipe by Diameter

Pipe Diameter inches	100 Percent Chlorine lbs	65 Percent Hypochlorite lbs	1 Percent Chlorine Solutions gallons
4	0.013	0.020	0.16
6	0.030	0.046	0.36
8	0.054	0.083	0.65
10	0.085	0.131	1.02
12	0.120	0.185	1.44
16	0.217	0.334	2.60

d. During the application of chlorine, position valves so that the strong chlorine solution in the main being treated will not flow into water mains in active service. Do not stop the chlorine application until the entire main is filled with heavily chlorinated water. Keep the chlorinated water in the main for at least 24 hours. During this time, operate all valves and hydrants in the section treated in order to disinfect the appurtenances. At the end of this 24-hour period, the treated water in all portions of the main shall have a residual of not less than 10 mg/L free chlorine.

e. Hypochlorite solution may be injected to the water main with a gasoline or electrically powered chemical feed pump designed for feeding chlorine solutions. The pump, feed lines, injector corporations, and injector quills, shall be of such material and strength as to safely withstand the corrosion caused by the concentrated chlorine solutions and the maximum pressures that may be created by the pumps. Check all connections for tightness before the solution is applied to the main.

B. Slug Method

1. Setup

a. The slug method consists of; completely filling the main to eliminate all air pockets, flushing the main to remove particulates, and slowly flowing a slug of water containing 100 mg/L of free chlorine through the main so that all parts of the main and its appurtenances will be exposed to the highly chlorinated water for a period of not less than 3 hours. Neutralize the chlorine residual of the water being disposed of in accordance with Section 15020.3.04. B, C, D, and E.

2. Chlorinating the main.

a. At a point not more than 10 feet downstream from the beginning of the new main, dose the water entering the new main with chlorine fed injection at a constant rate such that the water will have not less than 100 mg/L free chlorine. Provide an injection quill that distributes the concentrated solution to the center of the flow in the main. Provide and install corporations to measure the chlorine concentration at not more than 1200ft intervals including one within 10ft of the point of initial injection to ensure that this concentration is provided. Measure chlorine in accordance with the procedures described in the current edition of the AWWA Manual M12 or of *Standard Methods for the Examination of Water and Wastewater*. The chlorine shall be applied continuously and for a sufficient period to develop a solid column or "slug" of chlorinated water that will, as it moves through the main, expose all interior surfaces to a concentration of approximately 100 mg/L for at least 3 hours.

b. The free chlorine residual shall be measured in the slug as it moves through the main. If at any time the slug drops below 50 mg/L, stop the flow, relocate the chlorination equipment to the head of the slug, and as flow is resumed, apply chlorine to restore the free chlorine in the slug to not less than 100 mg/L.

c. As the chlorinated water flows past fittings and valves, operate related valves and hydrants so as to disinfect appurtenances and pipe branches.

3.04 DISPOSAL OF CHLORINATED WATER

A. Field dechlorination shall be done in accordance with AWWA C655-09. Do not keep heavily chlorinated water in contact with pipe for more than 48 hours after the applicable retention period. In order to prevent damage to

the pipe lining or corrosion damage to the pipe itself, flush the heavily chlorinated water from the main fittings, valves, and branches until chlorine measurements show that the concentration in the water leaving the main is no higher than that generally prevailing in the system or is acceptable for domestic use. Take all steps necessary to dechlorinate water where required per section 3.04B and 3.04C below. Contact the local sewer department to arrange for disposal of the heavily chlorinated water to the sanitary sewer if applicable.

B. Neutralize the chlorine residual of the water being disposed of by treating with one of the chemicals listed in Table 3. Select an alternative disposal site if a sanitary sewer system is unavailable for disposal of the chlorinated water. Chlorine residual shall be zero (0) prior to entering any storm water structure or a body of water that has the potential for aquatic life.

C. The proposed alternative disposal site shall be inspected and approved of by the Engineer. Apply a reducing agent to the chlorinated water to be wasted to completely neutralize the chlorine residual remaining in the water. (See Table 3 for neutralizing chemicals). Do not overdose neutralizing chemicals as this may result in adverse environmental impacts. Only dose the amount required to neutralize the amount of chlorine present. Contact federal, state and local regulatory agencies, where necessary, to determine special provisions for the disposal of heavily chlorinated water.

TABLE 3
Pounds of chemicals required to neutralize various residual chlorine concentrations in 100,000 gallons of water.

Residual Chlorine Concentration	Sulfur Dioxide	Sodium Bisulfite	Sodium Sulfite	Sodium Thiosulfate	Ascorbic Acid
mg/L	(SO_2)	($NaHSO_3$)	(Na_2SO_3)	($Na_2S_2O_3 \cdot 5H_2O$)	($C_6O_8H_6$)
1	0.8	1.2	1.4	1.2	2.1
2	1.7	2.5	2.9	2.4	4.2
10	8.3	12.5	14.6	12.0	20.9
50	41.7	62.6	73.0	60.0	104.0

D. Test for chlorine residual throughout the disposal process to be sure that the chlorine is neutralized

E. Submit a plan of disposal of flushed water to the Engineer for approval

3.05 BACTERIOLOGICAL TESTING

A. Bacteriological testing shall be done in accordance with AWWA Standard C651. After final flushing and before the water main is placed in service, the first of two consecutive sets of acceptable samples can be collected from

the new main. The second set of samples must be taken at least 24 hours after the first set of samples. The main shall not be flushed between final flushing and collection of the first and second collection set of samples. It is permitted to run minimal water flow for one minute through the sample port to clear the sample site for the collection of the first and second sample sets. At least one set of samples shall be collected from every 1,200 feet, of the new water main, plus one set from the end of the line and at least one set from each branch when possible or as required by regulatory requirements.

B. Samples shall be collected by a person knowledgeable in collecting samples for bacteriological sampling or arrange for the Owner to collect the sample. Coordinate with Owner and submit samples to the Owner for testing of bacteriological (chemical and physical) quality. Testing will be in accordance with Standard Methods of the Examination of Water and Wastewater. Currently, both the Membrane Filtration and Absence/Presence testing are approved methods for identification of coliform bacteria.

C. Samples shall show the absence of coliform organisms; and the presence of chlorine residual. Turbidity must be below 0.5 NTU and chlorine residual consistent with levels normally found in the distribution system before Bac-T and chemical samples can be taken. At arrival, the laboratory will double check the turbidity, chlorine and pH. The water quality record sheet and field data must accompany the samples.

D. If tests shows the presence of coliform or laboratory analysis are outside operating limit additional flushing and disinfection of the pipeline must be performed, at no additional cost to the Owner. The Contractor will be charged for the additional testing performed by the Owner.

3.06 REMOVE CORPS STOPS

A. Remove the corporation stops and plug the taps after successfully passing all bacteriological testing, as approved by the Engineer.

3.07 RETESTING AND TESTING SOURCE WATER

A. At the time of initial flushing the main to remove material and test for air pockets, Contractor may request the Owner to continue flushing until the normal chlorine residual is met at the discharge point. Notification must be provided in advance and the Contractor shall be prepared to test for chlorine at intervals of no more than five minutes as the water clears. This will provide the Contractor with some assurance that the source water is chlorinated.

B. If subsequent tests for bacteriological contamination conducted by the Contractor fail, the Contractor may request the Owner to continue flush from the source water into the new pipe system until chlorine residual is found at

the discharge point. Notification must be provided in advance and the Contractor shall be prepared to test for chlorine at intervals of no more than five minutes as the water clears. The operation of all existing system valves shall be by the Owner at the Contractor expense and the discharge point must be opened prior to opening existing valves to avoid contamination. This will provide the Contractor with some assurance that the source water is chlorinated for subsequent tests.

END OF SECTION

SECTION 15025

CLEANING PIPELINES

PART 1: GENERAL

1.01 SCOPE OF WORK

Clean the pipelines installed under these Contract Documents using foam pigs, swabs, or "go-devils", as described herein, whenever normal flushing will not sufficiently remove dirt and debris that was introduced during construction.

1.02 GENERAL

Normal pipeline flushing is often inadequate to remove all the entrapped air, loose debris, and other objects that may have been left in the main during installation. In such cases, use polyurethane foam pigs and/or polyurethane hard foam swabs to remove all foreign matter from the pipeline (i.e. "pig" the pipeline). Clean the pipeline per the requirements of this Specification Section prior to testing and disinfecting the main.

1.03 RELATED WORK

See Specification Section 15000.3.02 - Construction Methods to Avoid Contamination and Specification Section 15020.3.01-Preparation (prior to disinfecting pipelines).

1.04 PROTECTION DURING FLUSHING AND CLEANING

Coordinate with Engineer and Owner before flushing to ensure that an adequate volume of flushing water is available, at sufficiently high pressure. Determine if the water can be disposed of safely. Notify the Owner, Engineer, and the following prior to flushing, or cleaning:

a. Fire Department
b. Other utilities, such as gas, electric and telephone companies, who may have underground facilities in the area.
c. Customers who may be inconvenienced by reduced pressure or dirty water.

Coordinate with Owner to isolate the section to be flushed from the operating distribution system. Close valves slowly to prevent water hammer. Open the fire hydrant or blow-off valve slowly until the desired flow rate is obtained. When flushing from a dry barrel fire hydrant, use the gate valve upstream of the hydrant for throttling purposes. Open the hydrant valve fully to prevent water from escaping into the ground through the fire hydrant barrel drain.

Protect the work staff and the public during operation of hydrants and valves. Keep children away from the flow of flushing water. Where practical employ energy

dissipators to help avoid damage to property and the flooding of streets. The safety considerations also apply to main cleaning. See General Conditions Article 6.

PART 2: PRODUCTS

2.01 MATERIALS AND EQUIPMENT

Furnish the foam cleaning plugs (swabs or pigs), labor, and equipment as needed to pig all pipelines. Furnish all materials required for the expulsion of air and other debris from pipelines. Do not use pipe cleaning plugs which utilize Bristles, wire brushes, carbide abrasives, steel studs, or any other Type abrasive unless specifically approved by the Engineer. Consult a manufacturer of pipe cleaning plugs, such as Knapp Polly Pig (Houston, Texas), to determine the type and size of cleaning plug best suited for the application. Two types of plugs shall be considered and are described as follows:

A. Swabs

Swabs used for cleaning mains shall be made of polyurethane foam. This foam has a density of 1 to 2 pounds per cubic feet. Swabs shall be purchased from commercial manufacturers of swabs for pipes. Both soft and hard grade foam swabs are available. New mains are typically cleaned with hard foam swabs.

Use swabs cut into cubes and cylinders slightly larger than the size of the pipe to be cleaned. Cubes one inch larger in dimension than the nominal diameter of the pipe being cleaned have worked well for cleaning pipes up to 12-inches in diameter. For mains greater than 12-inches in diameter, the swab diameter must be considered individually for each operation. For new mains, swabs 3-inches larger than the pipe diameter have worked well. Swabs for the larger mains are usually 1-1/2 times the diameter in length.

B. Pigs

The other type of cleaning plug available is called a pig. Pigs, if used, shall be commercially manufactured for the specific purpose of cleaning pipes. They shall be made of polyurethane foam weighing 2 to 15 lb./cu.ft. Pigs are bullet shaped and come in various grades of flexibility and roughness. Pigs are typically 1/4 -inch to 1/2-inch larger in diameter than the pipe to be cleaned.

PART 3: EXECUTION

3.01 PLUG INSTALLATION AND REMOVAL

Furnish all equipment, material, and labor to satisfactorily expose cleaning wyes, or other entry or exit points. Remove cleaning wye covers, etc., as required by the Engineer to insert the plugs into the mains.

If approved by the Engineer, stripped fire hydrants, air valves and blow-offs may serve as entry and exit points for smaller sized mains. The Engineer will examine these

appurtenances and the connecting laterals to ensure that adequate openings exist through which a plug may be launched.

If these appurtenances are used, a special launcher is required to ease the insertion and launching of the plug. If available, a pressurized water source such as a fire hydrant can be used to launch the plug. If water from the system is not available nearby, use a water truck with pump.

If hydrants are used as entry and/or exit points, remove the internal mechanisms and plug the drains under the supervision of the Engineer. Insert the plug and replace the cap with a special flange with a 2-1/2-inch fitting. Connect the 2-1/2-inch fitting, with a pressure gauge and valve, to a pressurized water source. After closing the last valve isolating the section to be cleaned, open the hydrant supply valve. Propel the swab or pig into the main by opening the exit valve.

In mains greater than 8-inches, wyes shall be used at the entry and exit points. Fabricate the wye section one size larger than the main to ease the insertion and extraction of the plug. The use of wyes, as with the previously mentioned appurtenances, requires an outside source of pressurized water for launching. Cap the wye with a flange with a 2 to 6 inch fitting for connecting to the pressurized water source.

Many pigs are harder to insert into a pipe since they are less flexible than swabs,. Other methods acceptable to insert pigs include:

1. winching with a double sling,
2. winching with a rope attached to the pig,
3. compression with a banding machine prior to insertion, and
4. the use of a specially designed tapered steel pipe which is removed after use.

During swab or pig installation, leave as much water as possible in the main to be cleaned. The water suspends the material being removed from the pipe and minimizes the chance of the material forming a solid plug. Water in the pipe also keeps the swab or pig from traveling through the pipe at excessive rates. If swabs or pigs travel too fast, they will remove less material and wear more rapidly.

At the exit point or blow-off, install a wye long enough to house the swab or pig. Attach temporary piping to the end cap to allow the drainage of the water.

Take precautions to prevent backflow of purged water into the main when the cleaning plug exits through a dead end main. This can be accomplished by installing mechanical joint bends and pipe joints to provide a riser out of the trench. Additional excavation of the trench may serve the same purpose.

3.02 PRE-CLEANING PROCEDURES

A. Prepare a written cleaning plan for the Engineer's review,

B. Suggested pre-cleaning procedures include:

1. Identify mains to be cleaned on a map. Mark the location of the entry, water supply, exit points, any blow-offs to be used, valves to be closed, and the path of the swab or pig.

2. Under the Engineer's supervision and with Owner staff as required, inspect and operate all valves and hydrants to be used in the cleaning operation to ensure their correct operation and a tight shutdown.

3. Check location and type of hydrants, launch and exit location, and blow-offs to be used. Make blow-off tap connections, if necessary.

4. The Owner will notify customers served by the main to be cleaned that their water will be off for a specified period of time on the day of the cleaning.

5. The Owner will identify customers who may require temporary services during the main cleaning operation. The Contractor shall provide the temporary connections.

6. Determine the number and size of plugs to be used.

3.03 CLEANING PROCEDURE

Clean the pipeline using the following procedures and the Contractor's cleaning plan, as approved by the Engineer.

A. Swab Cleaning Procedures

1. Open the water supply upstream of the swab. Throttle the flow in the main at the discharge (plug exit) point so that the swab passes through the main at a speed of 2 to 4 fps. (At this velocity, swabs will effectively clean pipes for distances of up to 4,000 feet before disintegrating to a size smaller than the main.) Use pitot gauges at the exist hydrant or blow-off to estimate the flowrate in the main.

2. Note the time of entry of the swab into the main and estimate its time of exit. If the swab does not reach the exit point in the estimated time plus ten minutes, then a blockage has probably occurred. Reverse the flow in the main and note the time required for the swab to reach the original entry point. From the return travel time, estimate the location of the blockage. The Engineer may require the use of a swab containing a transmitter to accurately locate the blockage.

3. Swab repeatedly as needed. Stop swabbing when the water behind the swab emerging at the exit clears up within one minute. Account for all swabs inserted into the main.

4. After the last swab has been recovered, flush the main to remove swab particles. This may require up to an hour of flushing.

B. Pig Cleaning Procedures

1. Remove all air valves along the line. Insure that each isolating valves to the air release valve are completely closed. Operate system to prevent undesired build up of air while air release valves are out of service.

2. If the pig is inserted directly into the main, set it in motion by opening the upstream gate valve and a downstream fire hydrant or blow-off valve (usually the valve on the capped end at the exit point). If the pig is launched from a wye, fire hydrant, or other appurtenance, use an external pressurized water source to inject the pig into the main as described in Specification Section 3.01.

3. Once the pig is launched, control its speed by throttling the discharge at a downstream fire hydrant or blow-off. Operate pigs at the typical speed of 1 fps. This slow speed will help prevent pressure surges when the pig passes through undersized valves, enters smaller pipes, or turns through tees or crosses. Speeds of up to 2 fps. can be used on straight runs with no restrictions or sharp turns.

4. Make sufficient passes of the pig to obtain thorough cleaning. Two pigs may be used in tandem to save time and water. Sufficient cleaning is established when the water discharging after the pig becomes clear within one minute.

3.04 POST CLEANING PROCEDURE

After successful cleaning; test, flush, and disinfect the main in accordance with applicable sections of these Specifications.

END OF SECTION

SECTION 15030

PRESSURE AND LEAKAGE TESTS

PART 1: GENERAL

1.01 SCOPE OF WORK

Test all piping, valves, and appurtenances installed under these Contract Documents. Testing shall be performed prior to any disinfection of the pipeline. All pipeline installations shall be tested.

1.02 SUBMITTALS

Prepare and submit schedules and procedures to the Engineer for testing of all parts of the water main installed in accordance with these Contract Documents. Submit the schedule at least seven days prior to any testing.

PART 2: PRODUCTS

2.01 EQUIPMENT

Furnish the pump, pipe connections, and all necessary apparatus for the pressure and leakage tests including gauges and metering devices. The Owner reserves the option to furnish the gauges and metering devices for the tests. Excavate, backfill, and furnish all necessary assistance for conducting the tests.

PART 3: EXECUTION

3.01 GENERAL

A. Perform hydrostatic pressure and leak tests in accordance with the current version of AWWA C600 and AWWA C605, respectively, after the pipe or section of pipe has been laid, thrust blocking cured (min. 5 days), and the trench is completely or partially backfilled. Where practical, testing shall be performed fully isolated from the active distribution system.

B. The Contractor may, at his option, completely backfill the trench or partially backfill the trench over the center portion of each pipe section to be tested. However, the Engineer may direct the Contractor to completely backfill the trench if local traffic or safety conditions require.

C. For system operating pressures of 200 psi or less, perform the hydrostatic test at a pressure of no less than 100 psi above the normal operating pressure without exceeding the rating of the pipe and appurtenances. For system operating pressures in excess of 200 psi, perform the hydrostatic test at a pressure that is 1.5 times the normal operating pressure, but no more than the design rating of the pipe and appurtenances.

D. Valves shall not be operated in either direction at a differential pressure exceeding the rated valve working pressure. A test pressure greater than the rated valve working pressure can result in trapped test pressure between the gates of a double-disc gate valve. For tests exceeding the rated valve working pressure, the test setup should include a provision, independent of the valve, to reduce the line pressure to the rated valve working pressure on completion of the test. The valve can then be opened enough to equalize the trapped pressure with the line pressure, or the valve can be fully opened if desired.

E. The test pressure shall not exceed the rated working pressure or differential pressure of the valves when the pressure boundary of the test section includes closed, resilient-seated gate valves or butterfly valves.

F. Attach a tapping sleeve and valve assembly to the main. Pressure test the assembly prior to making the tap. The required test pressure shall be determined in the same manner as for pipe. The test is acceptable if there is no pressure drop in 15 minutes at test pressure.

3.02 FILLING AND TESTING

A. Slowly fill each segregated section of pipeline with water ensuring that all air is expelled. Extreme care must be taken to ensure that all air is expelled during the filling of pipe. The line shall stand full of water for at least twenty-four hours prior to testing to allow all air to escape. If necessary, tap the main at points of highest elevation to expel air as the pipe is filled. Remove the corporation stops and plug the taps after successfully filling the pipeline and expelling all air as approved by the Engineer.

B. Apply the specified test pressure, measured at the point of lowest elevation, using a pump connected to the pipe in a manner satisfactory to the Engineer. If the elevation of the high point of the pipeline being tested is such that the pressure during testing will be below 85% of the required test pressure, the Engineer will require a separate test to be performed on this section of pipeline. In lieu of a separate test, the test pressure measured at the lowest elevation may be increased, within the pressure rating of the pipeline material, such that the resulting pressure at the highest point exceeds 85% of the required test pressure. The test will be conducted for at least two hours at the required test pressure ± 5 psi.

C. Conduct a leakage test concurrently with the pressure test. Leakage is defined as the volume of the water that must be supplied into the newly laid pipeline to maintain pressure within 5 psi of the test pressure after it is filled and purged of air. Measure the volume of water using a calibrated container or meter.

D. No pipeline installation will be accepted by the Engineer if the leakage is greater than that shown in the following table:

Allowable Leakage per 1000 ft. of Pipeline*---gph

Avg. Test Pressure psi	Nominal Pipe Diameter---in. 4	6	8	12	16	20	24	30	36	42	48
100	0.27	0.41	0.54	0.81	1.08	1.35	1.62	2.03	2.43	2.84	3.24
125	0.30	0.45	0.60	0.91	1.21	1.51	1.81	2.27	2.72	3.17	3.63
150	0.33	0.50	0.66	0.99	1.32	1.66	1.99	2.48	2.98	3.48	3.97
175	0.36	0.54	0.72	1.07	1.43	1.79	2.15	2.68	3.22	3.75	4.29
200	0.38	0.57	0.76	1.15	1.53	1.91	2.29	2.87	3.44	4.01	4.59
225	0.41	0.61	0.81	1.22	1.62	2.03	2.43	3.04	3.65	4.26	4.86
250	0.43	0.64	0.85	1.28	1.71	2.14	2.56	3.21	3.85	4.49	5.13
275	0.45	0.67	0.90	1.34	1.79	2.24	2.69	3.36	4.03	4.71	5.38
300	0.47	0.70	0.94	1.40	1.87	2.34	2.81	3.51	4.21	4.92	5.62
350	0.51	0.76	1.01	1.52	2.02	2.53	3.03	3.79	4.55	5.31	6.07
400	0.54	0.81	1.08	1.62	2.16	2.70	3.24	4.05	4.86	5.68	6.49
450	0.57	0.86	1.15	1.72	2.29	2.87	3.44	4.30	5.16	6.02	6.88

*If the pipeline under test contains sections of various diameters, the allowable leakage will be the sum of the computed leakage for each size. The table has been generated from the formula: $L = \frac{S*D*P^{1/2}}{148,000}$ where L is the allowable leakage in gallons per hour, S is the length of pipe in feet, D is the nominal pipe diameter in inches, and P is the test pressure in psig.

E. Should any test disclose damaged or defective materials or leakage greater than that permitted, the Contractor shall, at Contractor's expense, locate and repair and/or replace the damaged or defective materials. Materials used for repair must be approved by the Engineer and meet the specifications. Repeat the tests until the leakage is within the permitted allowance and is satisfactory to the Engineer.

END OF SECTION

SECTION 15105

DUCTILE IRON PIPE AND FITTINGS
(Owner Furnished)

PART 1: GENERAL

1.01 COORDINATION OF WORK

Connection to existing pipelines may require shutdown of Owner facilities. Closely coordinate construction work and connections with the Owner through the Engineer. The Engineer, in consultation with the Owner, may select the time for connection to existing pipelines, including Saturdays, Sundays, or holidays, which, in the opinion of the Engineer, will cause the least inconvenience to the Owner and/or its customers,. Make such connections at such times as may be directed by the Owner, at the Contract prices, with no claim for premium time or additional costs.

1.02 RELATED WORK

Piping - General Provisions - Specification Section 15000

1.03 REFERENCES

Refer to current AWWA Standards:

AWWA C104 - American National Standard for Cement-Mortar Lining for Ductile-Iron Pipe and Fittings for Water

AWWA C105 - American National Standard for Polyethylene Encasement for Ductile-Iron Pipe Systems

AWWA C110 - American National Standard for Ductile-Iron and Gray-Iron Fittings, 3-inch through 48-inch, for Water and Other Liquids

AWWA C111 - American National Standard for Rubber-Gasket Joints for Ductile-Iron Pressure Pipe and Fittings

AWWA C115 - American National Standard for Flanged Ductile-Iron Pipe with Ductile-Iron or Gray-Iron Threaded Flanges

AWWA C116 - American National Standard for Protective Fusion-Bonded Epoxy Coatings for the Interior and Exterior Surfaces of Ductile-Iron and Gray-Iron Fittings for Water Supply Service

AWWA C150 - American National Standard for the Thickness Design of Ductile-Iron Pipe

AWWA C151 - American National Standard for Ductile-Iron Pipe, Centrifugally Cast, for Water

AWWA C153 - American National Standard for Ductile-Iron Compact Fittings, 3-inch through 24-inch and 54-inch through 64-inch, for Water Service

AWWA C600 -- AWWA Standard for Installation of Ductile-Iron Water Mains and Their Appurtenances

PART 2: PRODUCTS

Refer to Specification Section SSC-1000.1.03 for material to be furnished by the Owner.

2.01 PIPE MATERIAL

Install all ductile iron pipe and fittings furnished by the Owner. The Owner will furnish the list of materials provided.

Research has documented that certain pipe materials (such as polyvinyl chloride, polyethylene, and polybutylene) and certain elastomers (such as those used in gasket material) may be subject to permeation by lower-molecular weight organic solvents or petroleum products. Products supplied under this Specification Section assume that petroleum products or organic solvents will not be encountered. If during the course of pipeline installation the Contractor identifies, or suspects the presence of petroleum products or any unknown chemical substance, notify the Engineer immediately. Stop installing piping in the area of suspected contamination until direction is provided by the Engineer.

PART 3: EXECUTION

3.01 INSTALLATION

Follow the provisions of Specification Section 15000 and 02210 in addition to the following requirements:

A. Push-On Joints

Clean the surfaces that the gasket will contact thoroughly, just prior to assembly using a bacteria free solution (Mild bleach solution or NSF approved material). Insert the gasket into the groove in the bell. Apply a liberal coating of special lubricant in accordance with Section 15000.3.02.E to the gasket and the spigot end of the pipe before assembling the joint. Center the spigot end in the bell and push home the spigot end.

B. Mechanical Joints

Clean the surfaces that the gasket will contact thoroughly, just prior to assembly using a bacteria free solution (Mild bleach solution or NSF approved material). Apply a liberal coating of special lubricant in accordance with Section 15000.3.02.E to all the surfaces that the gasket will contact. Slip the follower gland and gasket over the pipe plain end making sure that the small side of the gasket and lip of the gland face the bell socket. Insert the plain end into socket. Push gasket into position with fingers. Seat gasket evenly. Slide gland into position, insert bolts, and tighten nuts by hand. Tighten bolts alternately (across from one another) to the recommended manufacturing rating or if not provided, to the following normal torques:

Bolt Size	Range of Torque In Foot-Pounds
5/8"	40 - 60
3/4"	60 - 90
1"	70 - 100
1-¼"	90 - 120

After field installation, all bolts shall receive petrolatum tape or petroleum wax protection or other approved coating material. Protection shall be applied before polyethylene encasement is applied per specification 15131.

C. Restrained Joints

(1) Ball and Socket

Assemble and install the ball and socket joint according to the manufacturer's recommendations. Thoroughly clean and lubricate the joint. Check the retainer ring fastener.

(2) Push-On

Assemble and install the push-on joint according to the manufacturer's recommendations. Thoroughly clean and lubricate the joint. Check the retainer ring fastener. No Field Lok gaskets are permitted on valves or fittings.

(3) Mechanical Joint

Assemble and install the mechanical joint according to the manufacturer's recommendations. Thoroughly clean and lubricate the joint. Use mega lug fastener with core-blue bolts on fittings and vales where required and approved for use by Engineer.

D. Pipe Protection Protect pipe from damage from the jacking device (backhoe bucket, pipe jack, etc.) when "pushing home" any pipe by using wood or other suitable (non metallic) material.

E. Gaskets The gaskets shall be as provided by the manufacturer and satisfy AWWA standard C111 in all respects. As noted in the products section of this specification, some gasket materials are prone to permeation of certain hydrocarbons which may exist in the soil (see part 2). Under these conditions and at the Engineer's discretion FKM (Viton, Flourel) gasket material may be provided by the Owner.

END OF SECTION

SECTION 15106

DUCTILE IRON PIPE AND FITTINGS
(Contractor Furnished)

PART 1: GENERAL

1.01 COORDINATION OF WORK

Connection to existing pipelines may require shutdown of Owner facilities. Closely coordinate construction work and connections with the Owner through the Engineer. The Engineer, in consultation with the Owner, may select the time for connection to existing pipelines, including Saturdays, Sundays, or holidays, which, in the opinion of the Engineer, will cause the least inconvenience to the Owner and/or its customers. Make such connections at such times as may be directed by the Owner, at the Contract prices, with no claim for premium time or additional costs.

1.02 RELATED WORK

Piping - General Provisions - Specification Section 15000

1.03 SUBMITTALS

Submit manufacturer's product data, installation instructions and certification for all materials to be furnished in accordance with Specification Section 1300. Submit classification and gradation test results for embedment and pipe backfill material.

1.04 REFERENCES

Refer to current AWWA Standards:

AWWA C104 - American National Standard for Cement-Mortar Lining for Ductile-Iron Pipe and Fittings for Water

AWWA C105 - American National Standard for Polyethylene Encasement for Ductile-Iron Pipe Systems

AWWA C110 - American National Standard for Ductile-Iron and Gray-Iron Fittings, 3-inch through 48-inch, for Water and Other Liquids

AWWA C111 - American National Standard for Rubber-Gasket Joints for Ductile-Iron Pressure Pipe and Fittings

AWWA C115 - Amrican National Standard for Flanged Ductile-Iron Pipe with Ductile-Iron or Gray-Iron Threaded Flanges

AWWA C116 - American National Standard for Protective Fusion-Bonded Epoxy Coatings for the Interior and Exterior Surfaces of Ductile-Iron and Gray-Iron Fittings for Water Supply Service

AWWA C150 - American National Standard for the Thickness Design of Ductile-Iron Pipe

AWWA C151 - American National Standard for Ductile-Iron Pipe, Centrifugally Cast, for Water

AWWA C153 - American National Standard for Ductile-Iron Compact Fittings, 3-inch through 24-inch and 54-inch through 64-inch, for Water Service

AWWA C600 -- AWWA Standard for Installation of Ductile-Iron Water Mains and Their Appurtenances

ISO 8179-1 Ductile Iron Pipes-External Zinc-Based Coating

PART 2: PRODUCTS

Research has documented that certain elastomers (such as those used in gasket material) may be subject to permeation by lower-molecular weight organic solvents or petroleum products. Products supplied under this Specification Section assume that petroleum products or organic solvents will not be encountered. If during the course of pipeline installation the Contractor identifies, or suspects the presence of petroleum products or any unknown chemical substance, notify the Engineer immediately. Stop installing piping in the area of suspected contamination until direction is provided by the Engineer.

2.01 PIPE MATERIAL

A. General

Ductile iron pipe shall conform to the latest specifications as adopted by the American National Standards Institute, Inc., (ANSI) and the American Water Works Association (AWWA). Specifically, ductile iron pipe shall conform to AWWA Standard C151.

The pipe exterior shall be coated with a bituminous coating in accordance with AWWA Standard C151 or arc-sprayed zinc applied mass of 200 g/m2 in accordance with ISO 8179 as directed by the Engineer. The pipe interior shall be cement mortar lined and seal coated in compliance with the latest revision of AWWA Standard C104. The pipe interior may be non-seal coated at the direction of the Engineer.

B. Quality

Pipe and fittings shall meet the following minimum quality requirements by conforming to the following:

1. AWWA C105 / ANSI A21.5 Cement-Mortar Lining for Ductile-Iron Pipe and Fittings for Water Polyethylene Encasement for Ductile-Iron Pipe Systems
2. AWWA C110 / ANSI A21.10 Ductile Iron and Gray Iron Fittings, 3 NPS through 48 NPS for Water AWWA C111 / ANSI A21.11 Rubber-Gasket Joints for Ductile-Iron Pressure Pipe and Fittings
3. AWWA C115 / ANSI A21.15 Flanged Ductile-Iron Pipe with Ductile-Iron or Gray-Iron Threaded Flanges

4. AWWA C116 / ANSI A21.16 Protective Fusion-Bonded Epoxy Coating for the Interior and Exterior Surfaces of Ductile-Iron and Gray-Iron Fittings for Water Supply Service
5. AWWA C150 / ANSI A21.50 Thickness Design of Ductile-Iron Pipe
6. AWWA C151 / ANSI A21.51 Ductile-Iron Pipe, Centrifugally Cast, for Water
7. AWWA C153 / ANSI A21.53 Ductile-Iron Compact Fittings, 3 NPS through 24 NPS and 54 NPS through 64 NPS, for Water Service

Standard ductile iron water pipe and fittings will be accepted on the basis of the Manufacturer's certification that the material conforms to Section 15106. Specialty ductile iron fittings listed in Piping Specialties Section 15131 shall meet the requirements of Section 15131. The certification for standard ductile iron fittings shall list a fitting description, quantity, bare fitting weight and source, (AWWA Standard C110, C153 or Manufacturer, if fitting is not listed in either standard). The certification shall accompany the material delivered to the project site. The Owner reserves the right to sample and test this material subsequent to delivery at the project site. If foreign manufactured fittings are provided, then the Contractor is obligated to notify the Engineer with a submittal and provide the necessary documentation to satisfy the Engineer and the Owner that the materials provided meet the specified AWWA standards and, among other documentation that may be required, provide certificates of compliance on the component supplied.

C. Pipe Class

The thickness class of pipe to be furnished shall be in accordance with Table 1 and the notes listed below or as otherwise shown on the drawings or specified by the Engineer.

TABLE 1
MINIMUM RATED WORKING THICKNESS CLASS
FOR DUCTILE IRON PIPE MANUFACTURED IN ACCORDANCE
WITH AWWA Standard C151

Pipe Size (Inch)	Class
4	52
6	52
8	52
12	52
16	54
20	54
24	54

NOTES:

1. The noted thickness class is adequate to support 3/4 and 1-inch corporation stops. Use a full saddle for larger taps (e.g.., air relief valves or larger corporations) due to limited wall thickness.

2. There are special conditions where a larger wall thickness is required. The Engineer shall direct the Contractor on the proper thickness class pipe to use in specific instances; e.g. at treatment plant or booster station sites where frequent excavation can be anticipated in the vicinity of pipe, where the pipeline is laid on a river channel bottom to prevent external damage to the pipe and minimize the potential for costly pipe replacement, etc.

D. Testing

Perform a hydrostatic test of all pipe and appurtenances as required by AWWA Standard C151 and Specification Section 15030.

E. Joints

1. Push-On and Mechanical

Push-On joint is preferred but Mechanical joint may be substituted if approved by the Engineer. Push-On and Mechanical joints including accessories shall conform to AWWA Standard C111.

2. Flanged

Flanged joints shall conform to AWWA Standard C110 or ANSI B16.1 for fittings and AWWA Standard C115 for pipe. Do not use flanged joints in underground installations except within structures.

Gaskets for Ductile Iron flanged joints shall be full face type SBR (styrene butadiene rubber) elastomer or suitable material for application as directed by the Engineer per ANSI/AWWA C111/A21.11 and shall be 1/8" thickness. Flanged gaskets shall be the high performance type satisfying the special requirements of ANSI/AWWA C111/A21.11 Appendix C, Sec. C.2 and have at least (2-3) bulb type rings molded into both faces of the gasket. Flat EPDM (Ethylene Propylene Diene Monomer) gaskets maybe used at the direction of the Engineer. The bolts shall have American Standard heavy unfinished hexagonal head and nut dimensions all as specified in American Standard for Wrench Head Bolts and Nuts and Wrench Openings (ANSI B18.2). For bolts of 1-3/4-inches in diameter and larger, bolt studs with a nut on each end are recommended. The high-strength, low-alloy steel for bolts and nuts shall have the characteristics listed in Table 6 of AWWA Standard C111. Exposed bolts and nuts in
soils shall be Xylan or FluoroKote #1.

3. Restrained Joint Pipe

Restrained pipe joints shall be of the boltless push-on type which provides joint restraint independent of the joint seal. Joint restrained gasket are allowed on pipe to pipe applications only on main installations 4"-12" at the direction of the Engineer. Restrained push-on joints allowed

for pipe only shall have accessories conforming to AWWA Standard C111. Restrained system shall be the thickness class as described in 2.01 C above and suitable for the following minimum working pressures:

Size (inch)	Pressure (psi)
Less than 20”	350
20”	300
24"	250
30" - 64"	250

F. Suppliers

Suppliers acceptable to American Water are

1. United States Pipe & Foundry Co.
   1101 East Pearl Street
   Burlington, NJ 08016 (Griffin Pipe
   Purchased by US Pipe in 2014)

2. McWane Cast Iron Pipe Co.
   2900 Highway 280, Ste 300
   Birmingham, AL 35223

3. American Cast Iron Pipe Company
   2916 16h Street North
   Birmingham, AL 35207

2.02 FITTINGS

A. Ductile Iron Fittings

Standard fittings shall be ductile iron conforming to AWWA Standard C110. Compact ductile iron fittings shall meet the requirements of AWWA Standard C153. Ductile iron specialty fittings listed in Piping Specialties Section 15131 shall meet the requirements listed in Section 15131.

1. Working Pressures.

Fittings shall be suitable for the following working pressures unless otherwise noted in AWWA Standard C110 or C153:

Pressure (psi)

Size	Compact Fittings Ductile Iron	Standard Fittings Ductile Iron
3" - 24"	350	250, 350 (with special gaskets-Flanged Applications)
30" - 48"	250	250
54” - 64”	250	N/A

The use of standard ductile iron fittings having a 250 psi pressure rating with ductile iron pipe (having a rating of 350 psi) is not permitted except by the expressed written approval by the Engineer.

2. Coating and Lining

The fittings shall be coated on the outside with a petroleum asphaltic coating in accordance with AWWA Standard C110 or fusion coated epoxy in accordance with AWWA Standard C116 and lined inside with cement-mortar and seal coated in accordance with AWWA Standard C104 or fusion coated epoxy in accordance with AWWA Standard C116.

B. Joints

1. Mechanical and Push-On

Mechanical and push-on joints including accessories shall conform to AWWA Standard C111. Anti-Rotation l T-Bolts shall be used on mechanical joints shall be of domestic origin, high strength, low alloy steel bolts only, meeting the current provisions of American National Standard ANSI/AWWA C111/A21.1-90 for rubber gasket joints for cast iron or ductile iron pipe and fittings. The manufacturer's certification of compliance must accompany each shipment. All T-bolts shall be Xylan or FluoroKote #1., (corrosion resistant) to handle corrosive conditions on any buried bolts.

2. Flanged

Flanged joints shall meet the requirements of AWWA Standard C115 or ANSI B16.1. Do not use flanged joints in underground installations except within structures. Gaskets for Ductile Iron flanged joints shall be full face type SBR (styrene butadiene rubber) elastomer or suitable material for application as directed by the Engineer per ANSI/AWWA C111/A21.11 and shall be 1/8" thickness. Flanged gaskets shall be the high performance type satisfying the special requirements of ANSI/AWWA C111/A21.11 Appendix C, Sec. C.2 and have at least (2-3) bulb type rings molded into both faces of the gasket. Flat EPDM (Ethylene Propylene Diene Monomer) gaskets maybe used at the direction of the Engineer. The bolts shall have American Standard heavy unfinished hexagonal head and nut dimensions all as specified in ANSI B18.2. Xylan or FluoroKote #1 Hex Bolts, (corrosion resistant) to handle corrosive conditions shall be used on any buried flanged bolts.

Bolts and nuts hall be threaded in accordance with ASME/ANSI B1.1, Unified Inch Screw Threads (UN and UNR Thread Form) class 2A external and class 2B internal. For bolts of 1-3/4-inches in diameter and larger, bolt studs with a nut on each end are recommended. Material for bolts and nuts shall conform to ASTM A307, 60,000 PSI Tensile Strength, Grade B, unless otherwise specified. Bolt manufacturer's certification of compliance must accompany each shipment.

3. Restrained

Restrained joints for push-on fittings shall be of the boltless push-on type which provides joint restraint independent of the joint seal. Joint restrained gaskets are NOT permitted on valves or fittings. Restrained push-on joints and restrained mechanical joints allowed for fittings only shall have accessories conforming to AWWA Standard C111. Restrained mechanical joint accessories shall also conform to Section 15131.2.04. Restrained system shall be suitable for the following minimum working pressures:

Size	Pressure (psi)
Less than 20”	350
20”	350
24"	250
30" - 64"	250

C. Suppliers acceptable to American Water:

1. Star Pipe Products
   4018 Westhollow Pkwy
   Houston, Texas 77082

2. American Cast Iron Pipe Company (Metalfit, Star and Sigma through)
   American Cast Iron Pipe Company
   2916 16h Street North
   Birmingham, AL 35207

3. (Metalfit, Star and Sigma through) United States Pipe & Foundry Co.
   1101 East Pearl Street
   Burlington, NJ 08016

PART 3: EXECUTION

3.01 INSTALLATION

Follow the provisions of Specification Section 15000 and 02210 in addition to the following requirements:

A. Push-On Joints

Clean the surfaces that the gasket will contact thoroughly, just prior to assembly using a bacteria free solution (bleach, potable water or NSF approved material). Insert the gasket into the groove in the bell. Apply a liberal coating of special lubricant in accordance with Section 15000.3.02.E to the gasket and the spigot end of the pipe before assembling the joint. Center the spigot end in the bell and push home the spigot end.

B. Mechanical Joints

Clean the surfaces that the gasket will contact thoroughly, just prior to assembly using a bacteria free solution (bleach, potable water or NSF approved material). Apply a liberal coating of special lubricant in accordance with Section 15000.3.02.E to all the surfaces that the gasket will contact. Slip the follower gland and gasket over the pipe plain end making sure that the small side of the gasket and lip of the gland face the bell socket. Insert the plain end into socket. Push gasket into position with fingers. Seat gasket evenly. Slide gland into position, insert bolts, and tighten nuts by hand. Tighten bolts alternately (across from one another) to the recommended manufacturing rating or if not provided, to the following normal torques:

Bolt Size	Range of Torque In Foot-Pounds
5/8"	40 - 60
3/4"	60 - 90
1"	70 - 100
1-1/4"	90 - 120

After field installation, all bolts shall receive petrolatum tape or petroleum wax protection or other approved coating material. If pipe is to be polywrapped, coating protection for the bolts shall be applied before applying polyethylene encasement per specification 15131.

C. Restrained Joints

1. Ball and Socket

Assemble and install the ball and socket joint according to the manufacturer's recommendations. Thoroughly clean and lubricate the joint in accordance with Section 15106.3.01.A. Check the retainer ring fastener.

2. Push-On

Assemble and install the push-on joint according to the manufacturer's recommendations. Thoroughly clean and lubricate the joint. Check the retainer ring fastener.

Protect pipe from damage from the jacking device (backhoe bucket, pipe jack, etc.) when “pushing home” any pipe by using wood or other suitable (non metallic) material.

D. Pipe Protection Protect pipe from damage from the jacking device (backhoe bucket, pipe jack, etc.) when “pushing home” any pipe. Wood or other suitable material (non metallic) shall be used to push home the pipe.

E. Gaskets Gaskets shall be as provided or recommended by the manufacturer and satisfy AWWA standard C111 in all respects. As noted in the products section of this specification, some gasket materials are prone to permeation of certain hydrocarbons which may exist in the soil (see part 2). Under these conditions and at the Engineer's discretion require contractor to provide FKM (Viton, Flourel) gasket material in areas of concern.

END OF SECTION

SECTION 15120

POLYVINYL CHLORIDE (PVC) PIPE
(Owner Furnished)

PART 1: GENERAL

1.01 SECTION INCLUDES

PVC pressure pipe in nominal sizes 4 inches through 12 inches with cast iron pipe equivalent outside diameters. Under special conditions 2" PVC may also be provided by owner.

1.02 REFERENCES

Refer to current ASTM & AWWA Standards:

A. ASTM – American Society for Testing and Materials

1 A536: Standard Specification for Ductile Iron Castings.
2 D2241: Standard Specification for Poly (Vinyl Chloride) (PVC) Pressure-Rated Pipe (SDR Series).
3 D2855: Standard Practice for Making Solvent Cemented Joints with Poly (Vinyl Chloride) (PVC) Pipe and Fittings.

B AWWA – American Water Works Association

1 Standard C605: Underground Installation of Polyvinyl Chloride (PVC) Pressure Pipe and Fittings for Water
2 Standard C900: Polyvinyl Chloride (PVC) Pressure Pipe, and Fabricated Fittings, 4 In. Through 48 In. (100 mm Through 1200 mm), for Water Transmission and Distribution.
3 M23: PVC Pipe - Design and Installation.

PART 2: PRODUCTS

Research has documented that certain pipe materials (such as polyvinyl chloride, polyethylene, and polybutylene) and certain elastomers (such as those used in gasket material) may be subject to permeation by lower molecular weight organic solvents or petroleum products. Products supplied under this Specification Section assume that petroleum products or organic solvents will not be encountered. If during the course of pipeline installation the Contractor identifies, or suspects the presence of petroleum products or any unknown chemical substance, notify the Engineer immediately. Stop installing piping in the area of suspected contamination until direction is provided by the Engineer.

2.01 PIPE MATERIALS

Install PVC pipe and joint materials furnished by the Owner. Materials to be furnished by the Owner are included in Section 01011 Specifications Special Conditions and Section 01000.1.03. PVC Pipe 4 inch through 12 inch shall meet AWWA Standard C900 SDR14. When 2" PVC is provided it shall meet NSF 61 and satisfy a 200 psi pressure rating.

2.02 RECEIVING, HANDLING and STORAGE

A. Inspect pipe and appurtenances for defects prior to installation in the trench. Set aside and clearly mark defective, damaged or unsound material and hold material for inspection by the Owner or Engineer.

B. Load and unload all materials in accordance with the manufacturer's recommendations and in such a manner as to prevent damage. Do not drop pipe and accessories or handle then in a rough manner.

C. Provide safe storage for all materials. Cover stored pipe that will be exposed to sunlight for periods longer than 6 months. Cover with canvas or other opaque material with provision for adequate air circulation. PVC pipe shall not be stored close to heat sources, such as heaters, boilers, steam lines, or engine exhaust.

PART 3: EXECUTION

3.01 INSTALLATION

Follow the provisions of Specification Section 15000 and 02210 in addition to the following requirements:

A. Remove all dirt and foreign matter from pipe before lowering it into the trench. Do not place debris, hand tools, clothing or other materials in the pipe. Keep pipe clean during and after laying.

B. Lay pipe with the bell end pointing in the direction of work progress. Do not roll, drop or dump pipe or appurtenances into the trench.

C. Assemble push-on joints in accordance with the pipe manufacturer's recommendations. Assemble mechanical joints in accordance with the fitting manufacturer's recommendations. Insertion of a Ductile Iron (DI) spigot into a PVC bell is prohibited.

D. Cut pipe with pipe saws, circular saws, handsaws, or similar equipment. Provide a smooth end at a right angle to the longitudinal axis of the pipe. Deburr, bevel, and re-mark insertion line on spigot ends. Match factory bevel length and angle for field bevels. When connecting to certain shallow depth bells, such as those on some cast iron fittings and valves, cut off the factory bevel and prepare a deburred, square cut end with a slight outer bevel.

E. Clean the sealing surface of the spigot end, the pipe bell, the coupler or fitting, and the elastomeric gaskets immediately before assembly. Do not remove factory installed gaskets for cleaning. Keep the joint free of dirt, sand, grit, grease or any foreign material. Apply NSF approved lubricant when assembling gasketed joints in accordance with the pipe manufacturer's requirements. The use of improper lubricants can damage gaskets. Excessive lubricant use can make disinfection more difficult and cause taste and odor problems when the line is placed in service.

F. Good pipe alignment is essential for proper joint assembly. Neither deflection nor bending of PVC pipe or pipe joints are permitted. Align the spigot to the bell and insert the spigot into the bell until it contacts the gasket uniformly. Do not swing or "stab" the joint; that is, do not suspend the pipe and swing it into the bell. The spigot end of the pipe is marked by the manufacturer to indicate the proper depth of insertion. Avoid metal to plastic contact when pushing the pipe "home" by using wood or other suitable material to cushion moving the pipe.

G. Assemble pipe using the following types of joints:

1. Gasketed bell joint – Integral with the pipe or fitting
2. Gasketed coupling – A double gasketed coupling
3. Mechanical joint – Any of the several joint designs that have gaskets and bolts manufactured in accordance with AWWA standards.

H. Tracer Wire

1. Place tracer wire in accordance with Specification 02558.

I. Pressure testing of PVC SDR 14 pipe shall not exceed 200 psi.

J. PVC pipe fittings shall employ ductile iron pipe fittings per specifications 15105 and 15106. See detail drawings for transitions between different pipe materials.

K. Gaskets The gaskets shall be as provided by the manufacturer and satisfy AWWA standard C111 in all respects. As noted in the products section of this specification, some gasket materials are prone to permeation of certain hydrocarbons which may exist in the soil (**PART 2: PRODUCTS**) as listed above. Under these conditions and at the Engineer's discretion FKM (Viton, Flourel) gasket material may be provided by the Owner.

3.02 SERVICE CONNECTIONS

Install service connections in accordance with AWWA Standard C605 and the manufacturer's recommendations using the following methods:

1. Tapping is only permitted through the use of service clamps or saddles.
2. Using injection molded couplings with threaded outlets.
3. Tapping with large service connections through appropriately sized tapping sleeves and valves.
4. Direct tapping of 1 inch and smaller service connections is not permitted. Use service saddles only for AWWA Standard C900 pipe, for nominal pipe sizes 4 inch through 48 inch. Corporation stops shall be threaded and conform to AWWA Standard C800.

END OF SECTION

SECTION 15121

POLYVINYL CHLORIDE (PVC) PIPE
(Contractor Furnished)

PART 1: GENERAL

1.01 SECTION INCLUDES

PVC pressure pipe and fabricated fittings in nominal sizes 4 inches through 12 inches with cast iron pipe equivalent outside diameters. Under special conditions 2" PVC may be specified in which case it shall meet NSF 61 and satisfy a 200 psi pressure rating.

1.02 SUBMITTALS

Submit manufacturer's product data, installation instructions and certification for all materials to be furnished in accordance with Specification Section 1300. Submit classification and gradation test results for embedment and pipe backfill material.

1.03 REFERENCES

Refer to current ASTM & AWWA Standards:

A. ASTM – American Society for Testing and Materials

1 A536: Standard Specification for Ductile Iron Castings.
2 D2241: Standard Specification for Poly (Vinyl Chloride) (PVC) Pressure-Rated Pipe (SDR Series).
3 D2855: Standard Practice for Making Solvent Cemented Joints with Poly (Vinyl Chloride) (PVC) Pipe and Fittings.

B AWWA – American Water Works Association

1 Standard C605: Underground Installation of Polyvinyl Chloride (PVC) Pressure Pipe and Fittings for Water
2 Standard C900: Polyvinyl Chloride (PVC) Pressure Pipe, and Fabricated Fittings, 4 In. Through 48 In. (100 mm Through 1200 mm), for Water Transmission and Distribution.
3 M23: PVC Pipe - Design and Installation.

PART 2: PRODUCTS

Research has documented that certain pipe materials (such as polyvinyl chloride, polyethylene, and polybutylene) and certain elastomers (such as those used in gasket material) may be subject to permeation by lower-molecular weight organic solvents or petroleum products. Products supplied under this Specification Section assume that petroleum products or organic solvents will not be encountered. If during the course of pipeline installation the Contractor identifies, or suspects the presence of petroleum products or any unknown chemical substance, notify the Engineer immediately. Stop

installing piping in the area of suspected contamination until direction is provided by the Engineer.

2.01 PIPE MATERIALS

Materials to be furnished by the Owner are included in Section 01011 Specifications Special Conditions and Section 01000.1.03. PVC Pipe 4 inch through 12 inch shall meet AWWA Standard C900 DR14 with outside diameter dimensions of cast iron pipe. The PVC compounds shall be treated or certified suitable for potable water products by the National Sanitation Foundation (NSF) Testing Laboratory (NSF Standard No. 61). When 2" PVC is provided it shall meet NSF 61 and satisfy a 200 psi pressure rating.

2.02 MANUFACTURERS

A. PW Eagle, Inc.
1550 Valley River Drive
Eugene, Oregon 97401
(541) 343-0200
www.pwpipe.com

B. J-M Manufacturing Company, Inc.
9 Peach Tree Hill Road
Livingston, NJ 07039
(973) 535-1633
www.jmm.com

C. North American Pipe Co. d/b/a (NAPCO Pipe and fittings)
(**Certa-Lok C-900 4"-12") (2" "Yellowmine" pipe**)-restrained joint pipe
2801 Post Oak Blvd., Suite 600
Houston, TX 77056
(713) 840-7473
www.northamericanpipe.com

D. National Pipe & Plastics
3421 Old Vestal Road
Vestal, NY 13850
(800) 836-4350
www.nationalpipe.com

E. Vinylplex Inc. d/b/a Sanderson Pipe
1800 Atkinson Ave.
Pittsburg, KS 66762
(620) 231-8290, (877) 779-7473
www.vinylplex.com
875 International Blvd.
Clarksville, TN 37040
(931) 221-4800
www.sandersonpipe.com

F. Pipelife Jetstream, Inc.
1700 S Lincoln St,
Siloam Springs, AR 72761
(479) 524-5151
info@pipelife-jetstream.com

2.03 **RECEIVING, HANDLING AND STORAGE**

A. Inspect pipe and appurtenances for defects prior to installation in the trench. Set aside and clearly mark defective, damaged or unsound material and hold material for inspection by the Owner or Engineer.

B. Load and unload all materials in accordance with the manufacturer's recommendations and in such a manner as to prevent damage. Do not drop pipe and accessories or handle then in a rough manner.

C. Provide safe storage for all materials. Cover stored pipe that will be exposed to sunlight for periods longer than 6 months. Cover with canvas or other opaque material with provision for adequate air circulation. PVC pipe shall not be stored close to heat sources, such as heaters, boilers, steam lines, or engine exhaust.

PART 3: EXECUTION

3.01 INSTALLATION

Follow the provisions of Specification Section 15000 and 02210 in addition to the following requirements:

A. Remove all dirt and foreign matter from pipe before lowering it into the trench. Do not place debris, hand tools, clothing or other materials in the pipe. Keep pipe clean during and after laying.

B. Lay pipe with the bell end pointing in the direction of work progress. Do not roll, drop or dump pipe or appurtenances into the trench.

C. Assemble push-on joints in accordance with the pipe manufacturer's recommendations. Assemble mechanical joints in accordance with the fitting manufacturer's recommendations. Insertion of a Ductile Iron (DI) spigot into a PVC bell is prohibited.

D. Cut pipe with pipe saws, circular saws, handsaws, or similar equipment. Provide a smooth end at a right angle to the longitudinal axis of the pipe. Deburr, bevel, and re-mark insertion line on spigot ends. Match factory bevel length and angle for field bevels. When connecting to certain shallow depth bells, such as those on some cast iron fittings and valves, cut off the factory bevel and prepare a deburred, square cut end with a slight outer bevel.

E. Clean the sealing surface of the spigot end, the pipe bell, the coupler or fitting, and the elastomeric gaskets immediately before assembly. Do not remove factory installed gaskets for cleaning. Keep the joint free of dirt, sand, grit,

grease or any foreign material. Apply approved lubricant when assembling gasketed joints in accordance with the pipe manufacturer's requirements. The use of improper lubricants can damage gaskets. Excessive lubricant use can make disinfection more difficult and cause taste and odor problems when the line is placed in service.

F. Good pipe alignment is essential for proper joint assembly. Align the spigot to the bell and insert the spigot into the bell until it contacts the gasket uniformly. Do not swing or "stab" the joint; that is, do not suspend the pipe and swing it into the bell. The spigot end of the pipe is marked by the manufacturer to indicate the proper depth of insertion. Avoid metal to plastic contact with the pushing the pipe home (use wood or other material to cushion moving the pipe. Neither deflection or bending of PVC pipe joints are permitted.

G. Assemble pipe using the following types of joints:

1. Gasketed bell joint – Integral with the pipe or fitting
2. Gasketed coupling – A double gasketed coupling
3. Mechanical joint – Any of the several joint designs that have gaskets and bolts manufactured in accordance with AWWA standards.

H. Tracer Wire

1. Place tracer wire in accordance with Specification 02558.

I. Pressure testing of PVC SDR 14 pipe shall not exceed 200 psi.

J. PVC pipe fittings shall employ ductile iron pipe fittings per specifications 15105 and 15106. See detail drawings for transitions between different pipe materials. When shown on the contract drawings or with written approval from the Owner's Engineer special fittings shall meet the requirements of Section 15131.2.04.

K. Gaskets The gaskets shall be as provided or recommended by the manufacturer and satisfy AWWA standard C111 in all respects. As noted in the products section of this specification, some gasket materials are prone to permeation of certain hydrocarbons which may exist in the soil (**PART 2: PRODUCTS**) as listed above. Under these conditions and at the Engineer's discretion require contractor to provide FKM (Viton, Flourel) gasket material in areas of concern.

3.02 SERVICE CONNECTIONS

A. Install service connections in accordance with AWWA Standard C605 and the manufacturer's recommendations using the following methods:

Install service connections in accordance with AWWA Standard C605 and the manufacturer's recommendations using the following methods:

1. Tapping is only permitted through the use of service clamps or saddles.

2. Using injection molded couplings with threaded outlets.
3. Tapping with large service connections through appropriately sized tapping sleeves and valves.
4. Direct tapping of 1 inch and smaller service connections is not permitted. Use service saddles only for AWWA Standard C900 pipe, for nominal pipe sizes 4 inch through 48 inch. Corporation stops shall be threaded and conform to AWWA Standard C800.

END OF SECTION

SECTION 15125

HIGH DENSITY POLYETHYLENE (HDPE) PIPE AND FITTINGS FOR WATER AND WASTEWATER MAINS (Contractor Furnished)

PART 1: GENERAL

1.01 SECTION INCLUDES

Furnishing and installing 4 inch through 12 inch or other size as approved by Engineer high density polyethylene (HDPE) pipe and fittings for potable water mains and wastewater mains

1.02 REFERENCES

A. ANSI/AWWA C111 Rubber Gasket Joints for Ductile Iron Pressure Pipe.

B. ANSI/AWWA C153 Ductile Iron Compact Fittings.

C. ANSI/AWWA Standard C906: Polyethylene (PE) Pressure Pipe and Fittings, 4 In. (100 mm) though 63 In. (1,575 mm), for Water Distribution and Transmission.

D. ASTM D3350: Standard Specification for Polyethylene Plastic Pipe and Fitting Materials

E. ASTM F2620: Standard Practice for Heat Fusion Joining of Polyethylene Pipe and Fittings

F. CFR 49 Part 192.281 thru 192.287 Transportation of Natural and other Gas by Pipeline *Minimum Safety Requirements for Plastic Pipe*

G NSF/ANSI 61 Drinking Water System Components Health Effects.

1.03 SUBMITTALS

Submit manufacturer's product data, installation instructions and certification for all materials to be furnished in accordance with Specification Section 01300 Submittals. Submit classification and gradation test results for embedment and pipe backfill material.

PART 2: PRODUCTS

2.01 MATERIALS

A. Research has documented that certain pipe materials (such as polyethylene, polybutylene, polyvinyl chloride, and asbestos cement) and elastomers, such as used in jointing gaskets and packing glands, may be subject to permeation by lower molecular weight organic solvents or petroleum products. Products supplied under this Specification Section

assume that petroleum products or organic solvents will not be encountered. If during the course of pipeline installation the Contractor identifies, or suspects the presence of petroleum products or any unknown chemical substance, notify the Engineer immediately. Stop installing piping in the area of suspected contamination until the Engineer provides direction.

B. Pipe and fittings shall be made from the same resin meeting the requirements of the Plastic Pipe Institute (PPI) material designation PE 4710 with an ATSM D3350 minimum cell classification of PE 345464C.

C. The material shall have a minimum Hydrostatic Design Basis (HDB) of 1,600 psi at 73 degrees F.

D. All materials for potable water projects including lubricants, shall be evaluated, tested, and certified for conformance with ANSI/NSF Standard 61.

2.02 PIPE

A. All pipe and fittings shall be manufactured in ductile iron pipe sizes (DIPS) in accordance with ANSI/AWWA Standard C906 and shall meet the requirements of NSF/ANSI 61

B. The pipe shall contain no recycled compound except for rework material generated in the manufacturer's own plant that has the same cell classification as the material to which it is being added. The pipe shall be homogeneous throughout and free of visible cracks, holes, voids, foreign inclusions, or other defects that may affect the wall integrity.

C. Permanent identification of water piping service shall be provided by co-extruding longitudinal blue stripes into the pipe outside surface. The striping material shall be the same material as the pipe material except for color. Stripes printed or painted on the outside surface shall not be acceptable.

D. The nominal pipe diameter is specified on the Contract Drawings. The DR (dimension ratio) shall be DR 11 unless otherwise noted on the Contract Drawings.

E. The minimum pressure rating is 200 psi for all HDPE pipe or as stated in the contract drawings and documents.

F. HDPE may be deflected subject to approval by the Engineer. The following table shows maximum deflection based upon the allowable strain of the pipe wall. Potential flow restrictions, surge and other non-trench stability and pipe strain issues may reduce the values shown here per the Engineer's recommendations.

PE pipe Dimension Ratio (DR)	Allowable deflection (percent)
32.5	8.1
26.0	6.5
21.0	5.2
19.0	4.7
17.0	4.2
15.5	3.9
13.5	3.4
11.0	2.7

2.03 FITTINGS

A) Plain end butt fused fittings shall be used when joining polyethylene materials. The minimum pressure rating is 200 psi for all HDPE fittings or as stated in the contract drawing s and documents.

B) The fittings shall contain no recycled compound except for rework material generated in the manufacturer's own plant that has the same cell classification as the material to which it is being added. The fittings shall be homogeneous throughout and free of visible cracks, holes, voids, foreign inclusions, or other defects that may affect the wall integrity.

C) All HDPE fittings shall comply with ANSI/AWWA C906 and meet the requirements of ANSI/NSF 61 and capable to meet CFR 49 Part 192.281 thru 192.287. Alternate option; when shown on the contract drawings or with written approval from the Owner's Engineer special fittings shall meet the requirements of Section 15131.2.04.B.

D) Tapping Sleeves used with polyethylene pipe shall be Ductile Iron or Stainless Steel specifically designed for use with polyethylene pipe and meet the requirements of Specifications Section 15171 Tapping Sleeves, Saddles, and Valves.

E) HDPE Mechanical Joint Adapter fittings shall be designed to mate with Ductile Iron Mechanical Joint fittings that meet the requirements of ANSI/AWWA C153 and mate with a mechanical joint gasket to produce a sealed joint that meets the requirements of ANSI/AWWA C111.

F) All fittings designed for the HDPE pipe transition to Ductile Iron pipe shall be designed for butt fusion and preassembled by the manufacture. The Ductile Iron pipe that is utilized by the transition fitting manufacture shall be pressure class 350, with either epoxy or bituminous coating that meets the pipe material requirements of Specifications Section 15106 Ductile Iron Pipe and Fittings.

2.04 ACCEPTABLE MANUFACTURERS

A. CPChem Performance Pipe
5085 West Park Blvd., Suite 500
P.O. Box 269006
Plano, Texas 75093

B. KWH Pipe Ltd.
5225 Canyon Crest Drive
Building 300, Suite 353
Riverside, California 92507

C. WL Plastics
3575 Lone Star Circle
Suite 300
Fort Worth, Texas 76177

D. United Poly Systems
4707 E Keerney Street
Springfield, MO 65803

PART 3: EXECUTION

3.01 PACKAGING, HANDLING, AND STORAGE

A. The manufacturer shall package the pipe in a manner designed to ensure that it arrives at the project neat, clean, intact, and without physical damage. The transportation carrier shall use appropriate methods and intermittent checks to assure that the pipe is properly supported, stacked, and restrained during transport such that the pipe is not nicked, gouged, or physically damaged.

B. Inspect pipe and appurtenances for defects prior to installation in the trench. Set aside defective, damaged or unsound material and hold material for inspection by the Engineer.

C. Pipe shall be stored on clean, level ground to prevent undue scratching or gouging. If the pipe must be stacked for storage, such stacking shall be done in accordance with the pipe manufacturer's recommendations. The pipe shall be handled in such a manner that it is not pulled over sharp objects or cut by chokers or lifting equipment.

D. Sections of pipe having been discovered with cuts or gouges in excess of 10% of the pipe wall thickness shall be cut out and removed. The undamaged portions of the pipe shall be rejoined by butt fusing.

3.03 PIPE INSTALLATION

A. Refer to Specifications Section 15000 Piping-General Provisions and referenced drawings that are part of these Contract Documents. Trenching and embedment shall be performed in accordance with Specifications Section 02210 Trenching Backfilling and Compaction. The Contractor shall verify and follow all manufacture recommended procedures as well as any special manufacture recommendations for working in very cold or hot weather conditions including but not limited to providing temperature conditioning for the pipe fusion and installation processes.

B. Remove all dirt and foreign matter from pipe before lowering into the trench. Do not place debris, hand tools, clothing or other materials in the pipe. Keep pipe clean during and after laying.

C. Maximum pipe bending radius shall be in conformance with the manufacturer's recommendation for the specific diameter and dimension ratio (DR) of the pipe. The Contractor shall verify the minimum bending radius with the manufacture and shall submit the manufacture recommended minimum bending radius to the Engineer prior to installation startup. Whenever possible, changes in direction shall be accomplished by bending the pipe in lieu of installing a fitting, except as approved by the Engineer.

D. The Contractor shall furnish and install identification tracer wire in accordance with Specifications Section 02558 Identification Location Guide.

E. Prevent flotation of sealed pipe during work stoppages.

F. HDPE Directional Drilling Installation specifications are not incorporated into this Section. The HDPE Directional Drilling installation shall meet the HDPE Directional Drilling installation specifications provided by the Engineer. If the Engineer has not provide HDPE Directional Drilling installation specifications as part the contract documents then the Contractor shall submit a directional drilling design plan and specifications as part of the bid. After the Engineer's written approval, directional drilling installation shall meet the requirements of the approved submittal.

G. The ends of the HDPE pipeline including a transition to another type of pipe shall be installed with restraint blocking and Ductile Iron pipe in accordance with the Specifications Drawing 0201-0601-SD04. Prior to installing restraint blocking or transition to another type of pipe the HDPE pipe shall go through a minimum of a 24 hour relaxation period.

3.04 PIPE AND FITTING JOINING

A. Prior to fusion start up the Contractor shall submit a copy of satisfactory training records for each heat fusion technician that meet the requirements of the fusion equipment manufacture. Prior to fusion start up the Contractor shall do tensile tests that verify fusion joint quality control at the start of the fusion technician's work-shift and additional tests when the ambient temperature changes more than 20 ˚ F during the work shift. At a minimum tensile testing for each technician must be conducted at least once per week. Tensile testing shall meet the requirements of subpart 3.06.B Testing and Disinfection of this Section.

B. The Contractor shall furnish and maintain protective shields, shelter equipment, heaters, blankets, fans, or other equipment as needed to condition the pipe temperature and protect the fusion process from dust, wind, extreme temperatures, forecasted weather conditions, and other adverse elements as required to maintain the manufacture's recommended temperature and atmospheric conditions of the fusion process. At minimum, a protective canopy shall be utilized during the fusion process.

C. The fusion mating surfaces shall be maintained clean and dry before joining per the manufacture's recommendations. The Contractor shall maintain the mating surfaces and fusion equipment in accordance with manufacture recommendations. Each mating end of the fusion joint is required to be of the same DR pipe. The longitudinal alignment of the pipe at the fusion joint shall align with the longitudinal centerline of both pipe sections. Miter joints are not allowed. The pipe ends shall be cut square and align perpendicular to the longitudinal centerline. The pipe ends shall be rounded uniformly as much as practical not to exceed a maximum tolerance of 5% of the pipe wall thickness.

D. The fusion process shall be performed in accordance to the HDPE pipe manufacture's recommended procedures utilizing the HDPE pipe manufacture's recommendations for device(s) and equipment. The fusion process shall also meet the HDPE fusion equipment manufacturer's recommended procedures. The procedures and equipment shall incorporate preparations of the mating surfaces and the application of heat to the mating surfaces. The heat source shall be aligned and held in place with the matting surfaces simultaneously to achieve uniform heating. After removing the heat source uniformly join the mating surfaces together and hold in place until the plastic hardens. The fusion process shall meet the requirements of CFR 49 192.281 thru 192.287. For additional information, see ASTM F2620. .

E. Fusion equipment shall be equipped with a Datalogger. Prior to work start up the Contractor shall submit a listing of the manufacture's recommended data logging parameters. Upon substantial completion, the Contractor shall submit records of each fusion joint appropriately identified in a report and provided to the Engineer. The data shall be kept updated at the work site and available to the Engineer for review at the

Engineer's request during the progress of the work. The data report shall provide a side-by-side comparison of the manufacture's recommended data parameters and the actual fusion data for each fusion joint.

F. Electrofusion fittings are not permitted.

G. The installation of mechanical compression type fittings for the joining of HDPE pipe is not permitted for pipes sizes 4" and larger diameters unless shown on the contract drawings or with written approval from the Owner's Engineer. Special fittings shall meet the requirements of Section 15131.2.04.B.

H. HDPE Transition Fittings that join HDPE pipe to Ductile Iron pipe are permitted only if preassembled by the manufacture. The installation of the Ductile Iron portion of the transition fitting shall meet the requirements of Specifications Section 15106 Ductile Iron Pipe and Fittings and in accordance to Specifications Drawing 0201-0601-SD04. The installation of the HDPE portion of the transition fitting shall meet the requirements of CFR 49 Part 192.281 thru 192.287. Alternate option; when shown on the contract drawings or with written approval from the Owner's Engineer special fittings shall meet the requirements of Section 15131.2.04.B.

J. HDPE Mechanical Joint Adapter fitting installation shall meet the requirements of CFR 49 Part 192.281 thru 192.287. The Mechanical Joint adapter portion of the fitting shall be installed to mate with a Ductile Iron fitting meeting the requirements of Specifications Section 15106 Ductile Iron Pipe and Fittings. When the fitting is used as part of a transition to Ductile Iron pipe the transition shall be in accordance with Specifications Drawing 0201-0601-SD04. Alternate option; when shown on the contract drawings or with written approval from the Owner's Engineer special fittings shall meet the requirements of Section 15131.2.04.B.

3.05 SERVICE CONNECTIONS

A. Mechanical clamps or tapping saddles may be used provided they are designed for HDPE pipe and acceptable to the manufacturer of the pipe.

B. The Contractor shall furnish and install service connections and materials that meet Section 01011 Specifications Special Conditions listing for each Missouri American Water District and shall meet the requirements of Specifications Section 15200 Service Lines.

3.06 TESTING AND DISINFECTION

A. Pressure testing and disinfection shall be performed in accordance with the Specifications Section 15020 Disinfecting Pipeline and Specifications Section 15030 Pressure and Leakage Tests. HDPE pipe shall only be pressure tested when the temperature of the pipe is between 40˚ F and 85˚ F. When adhering to Specifications Section 15030 the maximum test pressure shall not be permitted to exceed the HPDE pipe and fittings

manufactures' recommended test pressure. The contractor shall verify the manufacture rated maximum test pressure.

B Bend Strap tensile tests for fusion joint quality control shall be performed in accordance with the manufacture's recommendations. The sample pipe shall be fused from HDPE pipe stock or scrap HDPE pipe from the same material stock, diameter, and DR as that of which the technician will be installing during the technicians work-shift. Bend strap testing shall be done in accordance to the manufacture's recommended procedures. The Contractor shall submit a copy of the manufacture's recommended bend strap testing procedures to the Engineer prior to testing. A minimum of three straps per joint must be tested and found to be satisfactory. Samples shall be conditioned to 73˚ F prior to bending. Satisfactory test results shall meet the manufacture's recommended criteria. Testing results will be considered unacceptable if any disbondment, cracks, or voids are found during visual inspection. If a sample is found to be unsatisfactory, the Contractor supervisor shall be notified. Equipment repairs and/or modified procedures shall be utilized until a satisfactory bend strap test is performed. If one bend strap sample is found to be unsatisfactory, the fusion technician shall fuse another joint and start the testing over. Fused joint installation shall not proceed until satisfactory testing is completed. For 12-inch diameter HDPE pipe with wall thickness that exceeds 1-inch alternate tensile testing methods can be submitted to the Engineer for fusion joint quality control. The Contractor shall obtain written approval from the Engineer prior to implementing alternate tensile testing.

END OF SECTION

SECTION 15130

PIPING SPECIALTIES
(Owner Furnished)

PART 1: GENERAL

1.01 RELATED WORK SPECIFIED ELSEWHERE

See Specification Section 15000 - Piping - General Provisions. See Detail Drawings included in the Contract Documents for installation details for piping specialties.

PART 2: PRODUCTS

2.01 MATERIALS FURNISHED BY OWNER

Owner will furnish and Contractor shall install the piping specialties included in Section 01000.1.03 and Section 01011 Specifications Special Conditions. Piping specialties in general may include:

A. Clear polyethylene encasement
B. Valve boxes
C. Gate valves and butterfly valves (see also specification 15150 and 15155 respectively)
D. Tapping valves and tapping sleeves (see also specification 15170)
E. Air release valves (see also specification 15190)
F. Air blow off (see also specification 15190)
G. Corporation and curb stops (see also specification 15200)
H. Test/tracer wire boxes
I. Water line, valve, blowoff marker posts

PART 3: EXECUTION

3.01 INSTALLATION

Install “piping specialties” in accordance with the general provisions provided in Specification Section 15000 and the following:

A. Polyethylene Encasement

1. Encase piping in polyethylene to prevent contact with surrounding backfill and bedding material in all areas shown on the plans or designated by the Engineer. Polyethylene shall be clear and 12 mils.

2. Install the polyethylene material in accordance with AWWA Standard C105. Polyethylene shall fit snugly and not tightly stretched. All holes or tears shall be repaired with tape approved for this purpose. Large holes or tears shall be repaired by taping another piece of

polyethylene over the hole. Tape or plastic tie straps at joint overlaps and at every 3 foot interval.

3. Dig bell holes and slide polywrap over the adjacent pipe and provide a minimum of 1 foot of overlap. Tightly secure bottom of polywrap using two to three passes of polyethylene tape on the pipe to polywrap connection and the overlap polywrap to polywrap connection.

4. Where polyethylene wrapped pipe being installed connects to a pipe that is not wrapped (including existing pipe), extend the wrap a minimum of 3 feet onto the previously uncovered pipe. This includes service lines which may be wrapped in polyethylene or dielectric tape.

5. Exposure of wrapped pipe to sunlight should be kept to a minimum. Pipe can be stored with the polywrap on the pipe for a maximum of 14 days.

6. At no time shall the polywrapped pipe be subjected to a point load during handling, temporary storage, or installation. The polywrap must be moved away from the timbers or hoisting device while on the pipe to prevent point loads and resulting pin holes.

7. Direct service taps for polyethylene encased pipe shall follow the procedure described in AWWA Standard C600. Access to the main for tapping through polyethylene is accomplished by making two to three passes of polyethylene tape around the pipe and over the polywrap. The tap is to be made directly through the tape and polywrap.

8. Tape shall be polyethylene compatible adhesive and a minimum of 1.5" wide. Shall be Scotchwrap #50, Fulton #355, or Polyken #900.

B. Valve Boxes

Valve boxes shall be supported so that no load can be transmitted from the valve box to the valve. See Detail Drawing 0201-0601-SD59. Install a self-centering alignment ring at the operating nut American Flow Control, or equal or otherwise make sure that the bottom of the box is centered over the operating and runs perpendicular to the horizontal.

1. Butterfly Valves and Gate Valves

Install the valves in strict accordance with the requirements of Specification Section 15000. Set valves at the required locations with joints centered, spigots home and valve stems plumb unless otherwise directed by the Engineer.

2. Tapping Sleeves and Valves

Install the valves in strict accordance with the requirements of Specification Section 15000. After installation of the tapping sleeve and valve assembly but prior to making the tap the assembly shall be pressure tested hydrostatically in accordance with Specification Section 15030. The test shall be made with the valve open using a tapped mechanical joint cap. No leakage is acceptable. The test pressure shall be maintained for 15 minutes minimum.

C. Air Release Valve Assembles

See Detail Drawings for a typical air release valve assembly.

D. Air Blow-off

See Detail Drawings for air blow-off details.

E. Corporations and Curb Stops

Service line piping shall be compatible with corporation and curbs stops provided with appropriate protection between dissimilar materials and a minimum of interconnecting fittings

F. Test/Tracer Wire Boxes

Boxes shall placed at areas designated in the plans and shall be flush with existing grade unless otherwise noted.

G. Marker Posts

Install Marker Posts using equipment designed for its installation per manufacturer guidelines and place at locations noted in the drawings.

H. Exposed Metal Treatment

After field installation, all steel surfaces shall receive a petrolatum wax tape coating in accordance with AWWA Standard C217. Suppliers include, but are not limited to, Tapecoat® Envirotape® and Denso Densyl Tape. Surface preparation and tape installation shall be in accordance with ASTM C217 and the manufacturer's recommendations. Subject to approval by the ENGINEER, an alternative corrosion protection for exposed buried metal is an aerosol applied rubberized coating. The material shall be rapid dry and specifically designed for corrosion protection. 3M Rubberized Underseal Undercoating 08883 or any equivalent rubberized-bitumen based spray-on undercoating may be used. Follow manufacturer's recommendations for storage and application.

END OF SECTION

SECTION 15131

PIPING SPECIALTIES
(Contractor Furnished)

PART 1: GENERAL

1.01 SCOPE

This Specification Section covers the furnishing and installation of miscellaneous piping specialties as shown on the Drawings or as required to fulfill the intent of the project.

PART 2: PRODUCTS

2.01 POLYETHYLENE ENCASEMENT

A. Polyethylene encasement shall conform to AWWA Standard C105. The polyethylene film supplied shall be clear in color (V-Bio Enhanced Polyethylene encasement shall be white in color and V-Bio is Optional as directed by the Engineer) and distinctly marked (at minimum 2 foot intervals) with the following information:
   1. manufacturer's name (or trademark),
   2. year manufactured,
   3. minimum film thickness and material type (LLDPE or HDCLPE),
   4. range of nominal pipe diameter size
   5. ANSI/AWWA C105/A21.5 (compliance)
   6. A warning "WARNING–CORROSION PROTECTION-REPAIR ANY DAMAGE
   7. labeled "WATER" (Not on V-Bio)

B. Tape shall be polyethylene compatible adhesive and a minimum of 1.5" wide. Shall be Scotchwrap #50 or Sigma #355.

C. Store all polyethylene encasement out of the sunlight. Exposure of wrapped pipe should be kept to a minimum.

D. Polywrap shall be clear in color and be 12 mils thick. (V-bio shall be white in color and 8 mils thick).

E. Approved Manufacturers

AA Thread Seal Tape, Inc.
1275 Kyle Court
Wauconda, IL 60084

SIGMA Corporation
700 Goldman Drive
Cream Ridge, NJ 08514

Peistrup Paper Products
1185 Research Blvd
St. Louis, MO 63132

V-Bio

Balcan Plastic LTD –First Film Extruding
9340 meaux Street
Saint Leonard, QC HIR 3H2

Crayex Corporation
1747 Commerce Drive
Piqua, OH 45356

455 Highway 155 South
McDonough, GA 30253

2.02 VALVE BOXES

A. All valves shall be provided with valve boxes of a design approved by the Engineer. Valve boxes shall be of the standard, adjustable, cast iron extension type, multiple piece, 5-1/4-inch shaft, screw type, and of such length as necessary to extend from the valve to finished grade. The valve box shall be hot coated inside and out with asphaltic compound.

B. Valve boxes shall be manufactured by one of the following "approved manufacturers: Bingham & Taylor, Mueller, Handley Industries, A.Y. McDonald, Quality Water Products, or Clay and Bailey.

C. Valve box bases shall conform to the following:

Valve Size	Base
4" and smaller	round, 8" in height, 10-7/8" diameter at bottom
6" and 8"	round, 11" in height, 14-3/8" diameter at bottom
10" and larger	oval, 11" in height, 15" x 11-1/8" diameter at bottom

2.03 RODS, BOLTS, LUGS AND BRACKETS

A. All steel bolts including the nuts, washers, lugs, clamps, and brackets used for bolt accessories shall conform to AWWA C111 standards and shall be factory coated with an approved PTFE Fluoropolymer coating. Threaded rod including the nuts and standard washers used for threaded rod accessories shall meet ASTM F1554 Grade 55 or Grade 105 with Heavy Hex DH nuts and shall be coated with PTFE Fluorpolymer coating. Threaded rod shall meet the quantity and diameter requirements for Trumbull Part numbers 364-4104 thru 364-4114 flange lugs. Approved PTFE Fluoropolymer coating products include Fluorokote #1 ™, or Xylan™ Series 1420, 1421, 1424, or approved equal. PTFE Fluoropolymer coatings shall be baked on or thermally set by the coating manufacture. The PTFE coating requirement is available yet it is new to some

manufactures and the CONTRACTOR shall adjust scheduling to accommodate any extra time needed to special order these products.

B. Duc Lugs, Flange Lugs, and Socket Clamps shall be manufactured by one of the following approved manufactures;

Trumbull Industries, Inc.
1040 N. Meridian Rd.
PO Box 1556 Youngstown, Ohio 44501 (for use with Ductile Iron Pipe only).

Star Pipe Products, Inc.
4018 Westhollow Parkway
Houston, TX 77082 (Duc Lugs for use with Ductile Iron Pipe only).

C. After field installation, all steel surfaces shall receive a petrolatum wax tape coating in accordance with AWWA Standard C217. Approved wax tape products are Tapecoat®, Envirotape®, Denso Densyl Tape, or approved equal. Surface preparation and tape installation shall be in accordance with ASTM C217 and the manufacturer's recommendations. Subject to approval by the ENGINEER, an alternative corrosion protection for exposed buried metal is an aerosol applied rubberized coating. The material shall be rapid dry and specifically designed for corrosion protection. 3M Rubberized Underseal Undercoating 08883 or any equivalent rubberized-bitumen based spray-on undercoating may be used. Follow manufacturer's recommendations for storage and application.

2.04 RESTRAINT PRODUCTS

A. Specialty Retaining Glands

i. All retaining glands shall be ductile iron with ductile iron set screws or ductile iron gripping wedges and conform to AWWA C111 standards and ASTM F1674 for use on AWWA C900 PVC pipe. Pressure ratings shall meet the pressure rating of the pipe in accordance to AWWA C111 joint accessories. Retainer Glands shall be coated with an electrostaticaly applied baked on polyurethane coating or approved equal. Locking wedges, bolts, and set screws shall be PTFE Fluoropolymer coated with Xylan™ Series 1420, 1421, 1424, or Fluorokote #1™ or approved equal.

ii. Retaining glands shall be installed in accordance to manufacture recommendations and shall be manufactured by one of the following approved manufacturers:

EBBA Iron, Inc.
PO Box 857
Eastland Texas 76448.
For use with Ductile Iron pipe and AWWA C900 PVC pipe

Star Pipe Products, Inc.
4018 Westhollow Parkway
Houston, TX 77082 (Stargrip 3000 only).
(for use with Ductile Iron pipe only).

ROMAC Industries, Inc.
21919 20th Ave SE Suite 100
Bothell, WA 98021 (**ROMAC GRIPRING** only).
For use with Ductile Iron pipe and AWWA C900 PVC pipe

B. Specialty Restraint Couplings

i. Restraint couplings are for use in the transition of two different pipe materials and shall meet the pressure rating of the pipe material with the lower pressure rating. Protective coatings and accessories shall meet Section 15131.204.A.i or approved equal.

ii. Restraint couplings shall be installed in accordance to manufacture recommendations and shall be manufactured by one of the following approved manufacturers:

ROMAC Industries, Inc.
21919 20th Ave SE Suite 100
Bothell, WA 98021 (ROMAC **Alpha** Restrained Joint couplings for use with all ductile and plastic pipe, including HDPE).

Krausz Industries Krausz USA
331 SW 57th Ave
Ocala, FL 34474 (HYMAX GRIP 250 psi working pressure fittings only. The standard pressure fitting is not permitted. For use on all metal and plastic pipe).

Infact Corporation
1283 Gateway Drive
Gallatin, TN 37066 (**Foster Adaptor** and **FLEX ADAPTOR** only). All bolts and hardware shall be factory coated with PTFE or Fluorokote #1 coatings.
For use with Ductile Iron pipe only.

2.05 TEST /TRACER BOXES

A. All test/tracer boxes shall be 18" plastic box flared and squared at base and have a 4" I.D. with a 1 ½" cast iron flange. Lid shall be a one piece locking lid with "Test Station" marked on lid and shall contain 5 screw-type brass terminals on a non conductive terminal board.

B. Test/tracer boxes shall be manufactured by one of the following "approved manufacturers":

Handley Industries, Inc.
2101 Brooklyn Rd.
Jackson, MI 49203
Model T-45

2.06 MARKING POSTS

A. All marking posts shall be Rhino FiberCurve™ with PolyTechCoating or equivalent fiber-composite marking posts. The color shall be standard blue for water and the length shall be a minimum 66-inches. The decals be UV stable all weather type with a no dig symbol and white and contrasting white and blue vertical lettering: Butterfly and Gate Valves decals (Rhino GD-5226C) Blow-Offs decals (Rhino GD-5411C) Pipeline decals (Rhino GD-1333C).

B. Marking Posts shall be manufactured by one of the following "approved manufacturers":

Rhino
280 University Drive Southwest
Waseca, MN 56093
1-800-522-4343

Carsonite International
605 Bob Gifford Boulevard
Early Branch, SC 29916
1-800-648-7916

PART 3: EXECUTION

3.01 INSTALLATION

Install "piping specialties" in accordance with the general provisions provided in Specification Section 15000 and the following:

A. Clear Polyethylene Encasement

1. Encase piping in polyethylene to prevent contact with surrounding backfill and bedding material in all areas shown on the plans or designated by the Engineer. Polyethylene shall be 12 mils.

2. Install the polyethylene material in accordance with the DIPRA Field Polyethylene Installation Guide and AWWA Standard C105. Polyethylene shall fit snugly and not tightly stretched. All holes or tears shall be repaired with tape. Large holes or tears shall be repaired by taping another piece of polyethylene over the hole. Tape or plastic tie straps at joint overlaps and at every 3 foot interval.

3. Dig bell holes and slide polywrap over the adjacent pipe and provide a minimum of 1 foot of overlap. Tightly secure bottom of polywrap using two to three passes of polyethylene tape on the pipe to polywrap connection and the overlap polywrap to polywrap connection.

4. Where polyethylene wrapped pipe being installed connects to a pipe that is not wrapped (including existing pipe), extend the wrap a minimum of 3 feet onto the previously uncovered pipe. This includes service lines which may be wrapped in polyethylene or dielectric tape.

5. Exposure of wrapped pipe to sunlight should be kept to a minimum. Pipe can be stored with the polywrap on for a maximum of 14 days.

6. At no time shall the polywrapped pipe be subjected to a point load during handling, temporary storage, or installation. The polywrap must be moved away from the timbers or hoisting device while on the pipe to prevent point loads and resulting pin holes.

7. Direct service taps for polyethylene encased pipe shall follow the procedure described in AWWA Standard C600. Access to the main for tapping through polyethylene is accomplished by making two to three passes of polyethylene tape around the pipe and over the polywrap. The tap is to be made directly through the tape and polywrap.

8. Tape shall be polyethylene compatible adhesive and a minimum of 1.5" wide. Shall be Scotchwrap #50, Fulton #355, or Polyken #900.

V-Bio Enhanced Polyethylene Encasement

9. When using V-Bio Enhanced Polyethylene Encasement installation shall meet the installation recommendations of AWWA C105 and also meet the DIPRA Modified Method A V-Bio Enhanced Polyethylene Encasement Installation Video.

   https://www.dipra.org/ductile-iron-pipe-resources/videos-webinars/v-bio-enhanced-polyethylene-encasement-installation-video

B. Valve Boxes

Valve boxes shall be supported so that no load can be transmitted from the valve box to the valve. See Detail Drawing 0201-0601-SD59. Make sure that the bottom of the box is centered over the operating nut and runs perpendicular to the horizontal.

C. Air Release Valve Assembles

See Detail Drawings for a typical air release valve assembly.

D. Air Blow-off

See Detail Drawings for air blow-off details.

E. Corporations and Curb Stops

Service line piping shall be compatible with corporation and curbs stops provided with appropriate protection between dissimilar materials and a minimum of interconnecting fittings

F. Test/Tracer Wire Boxes

Boxes shall placed at areas designated in the plans and shall be flush with existing grade unless otherwise noted.

G. Marker Posts

Install Marker Posts using equipment designed for its installation per manufacturer guidelines and place at locations noted in the drawings or as approved by Engineer.

END OF SECTION

SECTION 15150

GATE VALVES
(Owner furnished)

PART 1: GENERAL

1.01 SCOPE

Furnish all labor, material, tools, and equipment required to install gate valves at the location shown on the plans, or where designated by the Engineer.

1.02 SUBMITTALS

A. Section not used.

1.03 RELATED WORK

Specification Section 15000 - Piping - General Provisions.

PART 2: PRODUCTS

Gate valves including large gate valves shall be furnished by the Owner for installation by the Contractor.

2.01 MATERIAL

A. This section not used. .

PART 3: EXECUTION

3.01 INSTALLATION

Install the valves in strict accordance with the requirements contained in Specification Section 15000 and detail drawings.

3.02 PROTECTION

After field installation of the valve all external bolts except the operating nut shall receive a layer of tape coating or approved rubberized-bitumen based spray-on undercoating applied before backfill. If polyethylene is applied to the pipe, the entire valve shall be encased in polyethylene encasement prior to backfill. The polyethylene encasement shall be installed up to the operating nut leaving the operating nut exposed and free to be operated.

END OF SECTION

SECTION 15151
GATE VALVES
(Contractor furnished)

PART 1: GENERAL

1.01 SCOPE

Furnish and install all gate valves shown on the Drawings and as described in Section 01000 Summary of Work and Section 01011 Specifications Special Conditions.

1.02 SUBMITTALS

Submit shop drawings and manufacturer's literature to the Engineer for approval in accordance with Specification Section 1300.

1.03 RELATED WORK

Specification Section 15000 - Piping - General Provisions.

PART 2: PRODUCTS

2.01 SMALL GATE VALVES

A. All gate valves, 2 inches through 12 inches NPS, shall be iron body, resilient-sealed, nut-operated, non-rising stem gate valves suitable for buried service. The valve interior and exterior shall be epoxy coated at the factory by the valve manufacturer in accordance with AWWA Standard C550 (6-8 mil average, 4 mil minimum). The valves shall be designed for a minimum differential pressure of 250 psi and a minimum internal test pressure of 500 psi unless otherwise noted on the plans. Valves shall be designed to operate in the vertical position.

B. Valves shall comply fully with AWWA Standard C509 or C515. Valve stems shall be made of a low zinc alloy in accordance with AWWA C509 or C515. Gate valves submittals shall include the ASTM designation for the low zinc stem material standard. Stem seals shall be double O-ring stem seals. Square operating nuts conforming to AWWA Standard C509 or C515 shall be used. All valve materials shall meet the requirements of NSF 61.

C. All valves shall open left except valves that are specified open right in the Contract Drawings or as required by the Owner in Section 01011 Specifications Special Conditions.

D. Test valves (Operation Test and Hydrostatic Tests) at the manufacturer’s plant in accordance with AWWA Standard C509 or C515. Provide the Engineer with certified copies of all tests prior to shipment. The Engineer reserves the right to observe all tests.

E. Acceptable manufacturers: Mueller Company, Decatur Illinois; Clow Canada, Hamilton, Ontario; M&H Valve, Anniston Alabama; United State Pipe and Foundry Burlington, New Jersey; American Flow Control, Birmingham, Alabama.

2.02 LARGE GATE VALVES

A. Gate valves larger than 12-inches NPS shall be iron body, double disc (metal to metal seat), parallel seats, bronze mounted, rubber O-ring packing seals, epoxy coated interior and exterior meeting the requirements of AWWA Standard C550, and conforming to AWWA Standard C500. Stems shall be made of a low zinc alloy in accordance with AWWA C500 4.2.2.4.3. Gate valves submittals shall include the ASTM designation for the low zinc stem material standard. All valves shall have openings through the body of the same circular area as that of the pipe to which they are attached. All valve materials shall meet the requirements of NSF 61.

B. All valves shall open left except valves that are specified open right in the Contract Drawings or as required by the Owner in Section 01011 Specifications Special Conditions.

C. Test valves (Operation Test and Hydrostatic Tests) at the manufacturer's plant in accordance with AWWA Standard C515. Provide the Engineer with certified copies of all tests prior to shipment. The Engineer reserves the right to observe all tests.

D. Valves shall have mechanical joint ends unless otherwise designated on the plans or approved by the Engineer. All gate valves larger than 12-inch shall be restrained.

E. The valves shall be designed for a minimum differential pressure of 150 psi and a minimum internal test pressure of 300 psi, unless otherwise noted on the plans. Make all valves tight under their working pressures after they have been placed and before the main is placed in operation. Any defective parts shall be replaced at the Contractor's expense.

F. Acceptable manufacturers: Mueller Company, ACIPCO (American Flow Control division, Waterous only), McWane, Inc. (Clow and M&H Divisions only), U.S. Pipe, and Crane Co. (Stockham Division only).

PART 3: EXECUTION

3.01 INSTALLATION

Install the valves in strict accordance with the requirements contained in Specification Section 15000 and detail drawings.

3.02 PROTECTION

After field installation of the valve all external bolts except the operating nut shall receive a layer of tape coating or approved rubberized-bitumen based spray-on undercoating applied before backfill. If polyethylene is applied to the pipe, the entire valve shall be encased in polyethylene encasement prior to backfill. The polyethylene encasement shall be installed up to the operating nut leaving the operating nut exposed and free to be operated.

END OF SECTION

SECTION 15154

BUTTERFLY VALVES
(Owner Furnished)

PART 1: GENERAL

1.01 SCOPE

Furnish all labor, material, tools, and equipment required to install butterfly valves at the location shown on the plans, or where designated by the Engineer.

1.02 RELATED WORK

Specification Section 15000 - Piping - General Provisions.

1.03 SUBMITTALS

A. Section not used.

PART 2: PRODUCTS

Butterfly valves shall be furnished by the Owner for installation by the Contractor.

2.01 MATERIAL

A. This section not used. .

PART 3: EXECUTION

3.01 SETTING VALVES

Install the valves in strict accordance with the requirements of Specification Section 15000.

3.02 PROTECTION

After field installation of the valve all external bolts except the operating nut shall receive a layer of tape coating or approved rubberized-bitumen based spray-on undercoating applied before backfill. If polyethylene is applied to the pipe, the entire valve shall be encased in polyethylene encasement prior to backfill. The polyethylene encasement shall be installed up to the operating nut leaving the operating nut exposed and free to be operated.

END OF SECTION

SECTION 15155

BUTTERFLY VALVES
(Contractor Furnished)

PART 1: GENERAL

1.01 SCOPE

Furnish and install all butterfly valves shown on the Drawings and as described in Section 01000 Summary of Work and Section 01011 Specifications Special Conditions.

1.02 RELATED WORK

Specification Section 15000 - Piping - General Provisions.

1.03 SUBMITTALS

Submit shop drawings and manufacturer's literature to the Engineer for approval in accordance with Specification Section 1300.

PART 2: PRODUCTS

2.01 VALVES

A. Furnish and install rubber-seated butterfly valves as shown on the Contract Drawings. Butterfly valves shall conform to Class 150B of the AWWA Standard C504 and this specification unless working pressure is greater than 150 psi in which case, the butterfly valve shall conform to Class 250B of the AWWA Standard C504.

B. All valves shall open left except valves that are specified open right in the Contract Drawings or as required by the Owner in Section 01011 Specifications Special Conditions.

C. Valve bodies shall be ductile iron with mechanical joint ends. Mechanical joint ends shall conform to AWWA Standard C111. All valve materials shall meet the requirements of NSF 61.

D. Valve shafts shall consist of one-piece units extending through the discs of 18-8 stainless steel Type 303 or 304. Shaft diameter shall be in accordance with Table 3 of AWWA Standard C504.

1. Valve discs shall be Ni-Resist, Type 1, or cast iron with stainless steel edges.

2. Valve seats shall be hycar or natural rubber mounted in the valve body.

3. Valve bearings shall be nylon or Teflon.

E. The valve interior and exterior shall be epoxy coated at the factory by the valve manufacturer in accordance with AWWA Standard C550 (6-8 mil average, 4 mil minimum).

F. All elastomers used in the butterfly valves must be suitable for service in the following water conditions:

1. Chlorine concentration up to 12 mg/L
2. Chloramine concentrations up to 6 mg/L
3. Ozone concentrations up to 2.0 mg/L (AWWA Standard says 0.5 ppm)
    1. pH range of 4-11

G. Manual buried operators, if provided, shall be either worm gear or traveling nut type and shall be furnished with 2-inch AWWA nuts and extension shafts. Input required at nuts to produce specified output torque shall be less than 150 ft.-lbs. Operators shall be designed to withstand an input at the nut of 300 ft.-lb. without damage to any operator components.

H. Acceptable manufacturers: Mueller Company (Henry Pratt Company Division only) and DeZurik Water Controls.

PART 3: EXECUTION

3.01 SETTING VALVES

Install the valves in strict accordance with the requirements of Specification Section 15000.

3.02 PROTECTION

After field installation of the valve all external bolts except the operating nut shall receive a layer of tape coating or approved rubberized-bitumen based spray-on undercoating applied before backfill. If polyethylene is applied to the pipe, the entire valve shall be encased in polyethylene encasement prior to backfill. The polyethylene encasement shall be installed up to the operating nut leaving the operating nut exposed and free to be operated.

END OF SECTION

SECTION 15170
TAPPING SLEEVES, SADDLES AND VALVES
(Owner Furnished)

PART 1: GENERAL

1.01 SCOPE

Furnish all labor, material, tools, and equipment required to install tapping sleeves, saddles and valves at the location shown on the plans, or where designated by the Engineer. This section does not apply to service line installations smaller than 2" diameter.

PART 2: PRODUCTS

Tapping sleeves, saddles and valves shall be furnished by the Owner for installation by the Contractor.

2.01 MATERIAL

A. This section not used. .

PART 3: EXECUTION

3.01 INSTALLATION

Install the tapping sleeves, saddles, and valves in strict accordance with the requirements of Specification Section 15000. Install the tapping sleeves, tapping saddles, and tapping valves in accordance with the manufacturer's instructions. The tapping procedure is to be in accordance with the tapping machine manufacturer's instructions.

3.02 PROTECTION

After field installation of the valve all external bolts except the operating nut shall receive a layer of tape coating or approved rubberized-bitumen based spray-on undercoating applied before backfill. If polyethylene is applied to the pipe, the entire sleeve and valve assembly shall be encased in polyethylene encasement prior to backfill. The polyethylene encasement shall be installed up to the operating nut leaving the operating nut of the tapping valve exposed and free to be operated

3.03 PRELIMINARY TESTING

Perform a hydrostatic test of the tapping sleeve or saddle and valve assembly in accordance with Specification Section 15030 after installation of the tapping sleeve or saddle and valve, but prior to making the tap. The test shall be made with the valve open using a tapped mechanical joint cap. No leakage is acceptable. The test pressure shall be maintained for a minimum of 15 minutes.

END OF SECTION

SECTION 15171
TAPPING SLEEVES, SADDLES AND VALVES
(Contractor Furnished)

PART 1: GENERAL

1.01 SCOPE

Furnish and install and test all tapping sleeves, tapping valves, and tapping saddles shown on the Drawings and as described in Section 01000 Summary of Work and Section 01011 Specifications Special Conditions.

1.02 RELATED WORK

Specification Section 15000 - Piping - General Provisions

1.03 SUBMITTALS

Submit shop drawings and manufacturer's literature to the Engineer for approval in accordance with Specification Section 1300.

1.04 REFERENCES

Refer to current ANSI/AWWA Standards:

ANSI/AWWA C105 - American National Standard for Polyethylene Encasement for Ductile-Iron Pipe Systems

ANSI/AWWA C110 - American National Standard for Ductile-Iron and Gray-Iron Fittings, 3-inch through 48-inch, for Water and Other Liquids

ANSI/AWWA C111 - American National Standard for Rubber-Gasket Joints for Ductile-Iron Pressure Pipe and Fittings

ANSI/AWWA C115 - American National Standard for Flanged Ductile-Iron Pipe with Ductile-Iron or Gray-Iron Threaded Flanges

ANSI/AWWA C116 - American National Standard for Protective Fusion-Bonded Epoxy Coatings for the Interior and Exterior Surfaces of Ductile-Iron and Gray-Iron Fittings for Water Supply Service

ANSI/AWWA C150 - American National Standard for the Thickness Design of Ductile-Iron Pipe

ANSI/AWWA C153 - American National Standard for Ductile-Iron Compact Fittings, 3-inch through 24-inch and 54-inch through 64-inch, for Water Service

ANSI/AWWA C200 -- AWWA Standard for Steel Water Pipe 6” and Larger

ANSI/AWWA C207 -- AWWA Standard for Steel Pipe Flanges for Waterworks Service-Sizes 4” Through 144”

ANSI/AWWA C208 -- AWWA Standard for Dimensions for Fabricated Steel Water Pipe Fittings

ANSI/AWWA C210 -- AWWA Standard for Liquid-Epoxy Coating Systems for Interior and Exterior of Steel Water Pipelines

ANSI/AWWA C213 -- AWWA Standard for Fusion-Bonded Epoxy Coating for the Interior and Exterior of Steel Water Pipelines

ANSI/AWWA C220 -- AWWA Standard for Stainless-Steel Pipe, ½" and Larger

ANSI/AWWA C223 -- AWWA Standard for Fabricated Steel and Stainless-Steel Tapping Sleeves

ANSI/AWWA C228 -- AWWA Standard for Stainless-Steel Pipe Flanges for Water Service – Sizes 2" Through 72"

ANSI/AWWA Standard C509.

ANSI/AWWA C600 -- AWWA Standard for Installation of Ductile-Iron Water Mains and Their Appurtenances

PART 2: PRODUCTS

2.01 GENERAL

All tapping sleeves, saddles and valves shall be designed for a normal working pressure of at least 250 psi for 12-inch and smaller. The valves shall be designed for a minimum differential pressure of 250 psi and a minimum internal test pressure of 500 psi unless otherwise noted on the plans. Tapping sleeves and tapping saddles and all supplied appurtenances of the tapping sleeves and tapping saddles shall be designed for an internal test pressure of 300psi.

2.02 DUCTILE IRON TAPPING SLEEVES

Verify the type of existing pipe and the outside diameter of the parent pipe on which the tapping sleeve is to be installed.

Tapping sleeves shall be ductile iron dual compression type unless otherwise specified on the Drawings. Tapping sleeves shall meet the requirements of ANSI/AWWA C110. Tapping sleeves shall be made in two halves which can be assembled and bolted around the parent pipe. Tapping sleeves, gaskets, seals, and outlets shall meet the requirements of NSF 61. Flange outlets shall conform to the requirements of ANSI/AWWA C110 and ANSI/AWWA C111 with flange gaskets that meet the requirements of ANSI/AWWA C207 Class E Mechanical Joint outlets and gaskets shall conform to the requirements of ANSI/AWWA C110 and ANSI/AWWA C111.

Acceptable manufacturers: McWane (Clow and M&H), U.S. Pipe (Mueller), and AFC (Waterous).

2.03 TAPPING VALVES

See Specification 15151 2.01 Small Gate Valves

2.04 FABRICATED STAINLESS STEEL TAPPING SLEEVES

Fabricated stainless steel tapping sleeves, outlets, seals, and gaskets shall meet the requirements of ANSI/AWWA C223 and be NSF 61 approved. Flange outlets and flange gaskets shall meet the requirements of ANSI/AWWA C207 Class E. Flanged outlets shall be recessed for tapping valve meeting the requirements of MSS-SP60. Mechanical Joint outlets shall meet the requirements of ANSI/AWWA C207 with mechanical joint dimensions and gaskets meeting the requirements of ANSI/AWWA C111 and be suitable for use with standard mechanical joint by mechanical joint resilient wedge gate valves per ANSI/AWWA C509.

Acceptable manufacturers: JCM and ROMAC

2.05 FABRICATED STEEL TAPPING SLEEVES

Fabricated steel tapping sleeves, outlets, seals, and gaskets shall meet the requirements of ANSI/AWWA C223 and be NSF 61 approved. Flange outlets and flange gaskets shall meet the requirements of ANSI/AWWA C207 Class E. Flanged outlets shall be recessed for tapping valve meeting the requirements of MSS-SP60. Mechanical Joint outlets shall meet the requirements of ANSI/AWWA C207 with mechanical joint dimensions and gaskets meeting the requirements of ANSI/AWWA C111 and be suitable for use with standard mechanical joint by mechanical joint resilient wedge gate valves per ANSI/AWWA C509. Fabricated steel tapping sleeves and outlets interior and exterior shall be epoxy coated meeting or exceeding the requirements of ANSI/AWWA C210 or ANSI/AWWA C213.

Acceptable manufacturers: JCM and ROMAC

2.06 TAPPING SADDLES

Verify the type of existing pipe and the outside diameter of the parent pipe on which the tapping saddle is to be installed.

Tapping saddles shall consist of ductile iron outlet castings meeting the requirements of ANSI/AWWA C110 furnished by the casting manufacture with straps, gaskets, and bolts to provide a complete installation. The outlet castings shall be fabricated with alloy steel

straps that attach the ductile iron outlet to the parent pipe capable to support the weight of the tapping valve during installation. Gaskets, seals, and outlets shall be NSF 61approved. Castings shall be designed to meet or exceed a normal operating pressure of 250 psi. Castings shall be designed with an O-ring gasket that seals to the parent pipe meeting or exceeding 250psi normal operating pressure and meets the material requirements for sleeve gaskets of ANSI/AWWA C223. Flange gaskets shall meet the requirements of ANSI/AWWA C207 Class E gaskets. Flange outlets shall conform to the requirements of ANSI/AWWA C110 and ANSI/AWWA C111 with flanged outlets recessed for use with tapping valves and tapping equipment meeting MSS-SP60. Mechanical Joint outlets and gaskets shall conform to the Mechanical Joint requirements of ANSI/AWWA C110 and ANSI/AWWA C111 and be suitable for use with standard mechanical joint by mechanical joint resilient wedge gate valves per ANSI/AWWA C509.

Acceptable manufacturers: ACIPCO

2.07 BOLTS

Bolts, nuts and washers shall meet or exceed the bolt requirements of ANSI/AWWA C223.

Fabricated stainless steel tapping sleeves shall be furnished with stainless steel bolts, nuts, and washers that meet or exceed the stainless steel bolt requirements of ANSI/AWWA C223.

Ductile iron tapping sleeves and ductile iron tapping saddles along with fabricated steel tapping sleeves shall each be furnished with bolts, nuts and washers that meet or exceed the steel bolt requirements of ANSI/AWWA C223. The steel bolts, nuts, and washers shall be furnished by the manufacture with epoxy coatings that meet Section 15131.2.02.A PTFE coatings Xylan or FluoroKote #1 or approved equal.

PART 3: EXECUTION

3.01 INSTALLATION

Install the tapping sleeves, saddles, and valves in strict accordance with the requirements of Specification Section 15000. Install the tapping sleeves, tapping saddles, and tapping valves in accordance with the manufacturer’s instructions. The tapping procedure is to be in accordance with the tapping machine manufacturer's instructions.

3.02 PROTECTION

After field installation of the valve all external bolts except the operating nut shall receive a layer of tape coating or approved rubberized-bitumen based spray-on undercoating applied before backfill. If polyethylene is applied to the pipe, the entire sleeve and valve assembly shall be encased in polyethylene encasement prior to backfill. The

polyethylene encasement shall be installed up to the operating nut leaving the operating nut of the tapping valve exposed and free to be operated

3.03 PRELIMINARY TESTING

Perform a hydrostatic test of the tapping sleeve or saddle and valve assembly in accordance with Specification Section 15030 after installation of the tapping sleeve or saddle and valve, but prior to making the tap. The test shall be made with the valve open using a tapped mechanical joint cap. No leakage is acceptable. The test pressure shall be maintained for a minimum of 15 minutes.

END OF SECTION

SECTION 15180

FIRE HYDRANTS
(Owner Furnished)

PART 1: GENERAL

1.01 SCOPE

Furnish all labor, material, tools, and equipment required to install fire hydrants at the location shown on the plans, or where designated by the Engineer.

PART 2: PRODUCTS

Fire hydrants material shall be furnished by the Owner for installation by the Contractor.

2.01 MATERIAL

A. This section not used. .

PART 3: EXECUTION

3.01 INSPECTION PRIOR TO INSTALLATION

Contractor shall inspect all fire hydrants upon receipt. Cycle each hydrant to full open and full closed positions to ensure that no internal damage or breakage has occurred during shipment and handling. Check all external bolts for proper tightness.

After inspection, close the hydrant valves and replace the outlet nozzle caps to prevent the entry of foreign matter. Protect stored hydrants from the weather/elements with the inlets facing downward.

3.02 INSTALLATION

Locate hydrants on the plans or as directed by the Engineer and in compliance with local regulations. The location shall provide complete accessibility and minimize the possibility of damage from vehicles or injury to pedestrians. When placed behind the curb, the hydrant barrel shall be set so that no portion of the pumper or hose nozzle cap will be less than twenty-four (24”) to thirty-six (36”) inches, depending on local requirements, from the gutter face of the curb. All hydrants shall stand plumb with the pumper nozzle facing the curb. Set hydrants with nozzles at least eighteen inches above the finished grade as shown on the plans. Set the break flange at least two but no more than six inches above finished grade, or as directed by the Engineer. Connect each hydrant to the main with a six inch branch connection controlled by an independent six inch gate valve, unless otherwise shown on the plans. All hydrants assemblies must be restrained from the hydrant back to the main. Install hydrants on the end of dead end 8” or larger mains installations as shown on the plans or as directed by the Engineer.

The Engineer may authorize hydrant protection using steel pipe bollards when hydrant installations have a greater than normal exposure to vehicular damage (e.g. parking lot installations,

unusual driving situation, etc.). Install all such protection designated by the Engineer per detail drawing 0201-0601-SD34. Locate bollards as necessary adjacent to the hydrant and in such a manner as to not interfere with the ability to connect hoses or operate the hydrant as per detail drawing. Additionally, locate the bottom of the bollard and encasement above the hydrant supply piping and valve to prevent the possibility of damage to the piping should the bollard be displaced when hit.

Unless otherwise directed by the Engineer, excavate a drainage pit two feet in diameter and two feet deep below but not beyond each hydrant. Fill the pit with compacted ¾ inch clean granular under and around the base of the hydrant to a level 12 inches above the hydrant drain opening. No hydrant drainage pit shall be connected to a sewer.

Cover the drainage area with geotextile fabric. The fabric shall completely isolate the gravel or stone so that no fill material or adjacent earth comes in contact with pit material.

Notify the Engineer of situations where the ground water table is above the drain opening of the hydrant barrel. If directed by Engineer, plug the drain opening using a method acceptable to the hydrant manufacturer. No drainage pit is required when the hydrant drain is plugged. Mark the hydrant, in a manner acceptable to the Owner, to indicate that the drain opening has been plugged. Operation of a hydrant with plugged drain leaves the hydrant barrel full of water. Pump the hydrant barrel dry after each use.

Provide reaction or thrust blocking at the base of each hydrant that does not obstruct the drainage outlet of the hydrant per detail drawing 0201-0601-SD35. The size and shape of concrete thrust backing and the number and size of tie rods, when required, shall be approved by the Engineer. Use the thrust blocking material specified in Specification Section 3300. See Specification Section 15000 for tie rod requirements.

3.03 TESTING

After installation and before backfilling (and after pressure testing the water main) test the hydrant as follows:

A. Pressure Test

1. Open the hydrant fully and fill with water; close all outlets.
2. To prevent caps from being blow off dry-barrel hydrants and to prevent other possible damage, vent air from the hydrant by leaving one of the caps slightly loose as the hydrant is being filled. After all air has escaped, tighten the cap before proceeding.
3. Apply line pressure.
4. Check for leakage at flanges, nozzles and operating stem.
5. If leakage is noted, repair or replace components or complete hydrant until no leaks are evident.

B. Drainage Test for Dry-Barrel Hydrants

1. Following the pressure test, close hydrant.
2. Remove one nozzle cap and place pylon or hand over nozzle opening.
3. Drainage rate should be sufficiently rapid to create a noticeable suction.

4. After backfilling, operate the hydrant to flush out any foreign material.
5. Tighten nozzle caps, them back them off slightly so that they will not be excessively tight; leave tight enough to prevent removal by hand.

3.04 PAINT

After installation and backfilling paint the hydrant as follows:

A. Paint all of the hydrant that is above the bury line in accordance with the local operations standards. Touch up paint (as specified by the OWNER) shall be applied upon completion of installation as needed. Take extreme care to ensure that paint is not applied on the “O” ring under the top operating nut and not on the threads of the hydrant nozzles and caps. If paint comes in contact with the threads and/or O Ring the Contractor shall remove all paint from the threads of the hydrant nozzles and caps, and replace the “O” ring at the Contractor’s expense.

END OF SECTION

SECTION 15181

FIRE HYDRANTS
(Contractor Furnished)

PART 1: GENERAL

1.01 SCOPE

Furnish all labor, material, tools, and equipment required to install fire hydrants at the location shown on the Drawings and as described in Section 01000 Summary of Work and Section 01011 Specifications Special Conditions, or as designated by the Engineer.

PART 2: PRODUCTS

2.01 MATERIAL

A. All fire hydrants shall be ductile iron and conform to the requirements of AWWA C502, traffic-model break-away type fire hydrants.

B. All fire hydrants shall open left except hydrants that are specified open right in the Contract Drawings or as required in Section 01011 Specifications Special Conditions and be clearly marked on the top of the hydrant. The operating top nut shall be a 1-1/2" pentagon and the stem shall have a minimum of two O- ring stem seals. The hydrant shall be break-away traffic flange, 5-1/4" valve opening, 6" mechanical joint pipe connection. The hydrant interior and exterior shall be epoxy coated at the factory by the hydrant manufacturer in accordance with AWWA Standard C550 (6-8 mil average, 4 mil minimum).The CONTRACTOR shall contact the local water district and obtain written fire hydrant mechanical details from the water district prior to ordering any fire hydrants in accordance with the drawings.

C. The number and sizes of hose nozzle outlets is dependent on the local regulation or as required by the Owner in Section 01011 Specifications Special Conditions. (Most typical is two (2) bronze male threaded 2-1/2" hose outlet nozzles and one (1) bronze male threaded 4-1/2" pumper outlet nozzle with American National Fire Hose Connection Screw Threads (NH).

D. All hydrant materials shall meet the requirements of NSF 61.

E. Acceptable manufacturers and models, subject to the specifications set forth, include:

- American Darling B-84-B, 5-1/4" valve opening (by the American Flow Control Division of ACIPCO)
- Kennedy Guardian, 5-1/4" valve opening (by Kennedy Valve Company Division of McWane, Inc.)
- Mueller Super Centurion 250, Model A-423, 5-1/4" valve opening

PART 3: EXECUTION

3.01 INSPECTION PRIOR TO INSTALLATION

Contractor shall inspect all fire hydrants upon receipt. Cycle each hydrant to full open and full closed positions to ensure that no internal damage or breakage has occurred during shipment and handling. Check all external bolts for proper tightness.

After inspection, close the hydrant valves and replace the outlet nozzle caps to prevent the entry of foreign matter. Protect stored hydrants from the weather/elements with the inlets facing downward.

3.02 INSTALLATION

Locate hydrants on the plans or as directed by the Engineer and in compliance with local regulations. The location shall provide complete accessibility and minimize the possibility of damage from vehicles or injury to pedestrians. When placed behind the curb, the hydrant barrel shall be set so that no portion of the pumper or hose nozzle cap will be less than twenty- four (24") to thirty-six inches (36"), depending on local requirements, from the gutter face of the curb. All hydrants shall stand plumb with the pumper nozzle facing the curb. Set hydrants with nozzles at least eighteen inches above the finished grade as shown on the plans. Set the break flange at least two but no more than six inches above finished grade, or as directed by the Engineer. Connect each hydrant to the main with a six inch branch connection controlled by an independent six inch gate valve, unless otherwise shown on the plans. All hydrants assemblies must be restrained from the hydrant back to the main. Install hydrants on the end of dead end 8" or larger mains installations as shown on the plans or as directed by the Engineer.

The Engineer may authorize hydrant protection using steel pipe bollards when hydrant installations have a greater than normal exposure to vehicular damage (e.g. parking lot installations, unusual driving situation, etc.). Install all such protection designated by the Engineer per detail drawing 0201-0601-SD34. Locate bollards as necessary adjacent to the hydrant and in such a manner as to not interfere with the ability to connect hoses or operate the hydrant as per detail drawing. Additionally, locate the bottom of the bollard and encasement above the hydrant supply piping and valve to prevent the possibility of damage to the piping should the bollard be displaced when hit.

Unless otherwise directed by the Engineer, excavate a drainage pit two feet in diameter and two feet deep below but not beyond each hydrant. Fill the pit with compacted ¾ inch clean granular under and around the base of the hydrant to a level 12 inches above the hydrant drain opening. No hydrant drainage pit shall be connected to a sewer.

Cover the drainage area with geotextile fabric. The fabric shall completely isolate the gravel or stone so that no fill material or adjacent earth comes in contact with pit material.

Notify the Engineer of situations where the ground water table is above the drain opening of the hydrant barrel. If directed by Engineer, plug the drain opening using a method acceptable to the hydrant manufacturer. No drainage pit is required when the hydrant drain is plugged. Mark the hydrant, in a manner acceptable to the Owner, to indicate that the drain opening has been plugged. Operation of a hydrant with plugged drain leaves the hydrant barrel full of water. Pump the hydrant barrel dry after each use.

Provide reaction or thrust blocking at the base of each hydrant that does not obstruct the drainage outlet of the hydrant per detail drawing 0201-0601-SD35. The size and shape of concrete thrust backing and the number and size of tie rods, when required, shall be approved by the

Engineer. Use the thrust blocking material specified in Specification Section 3300. See Specification Section 15000 for tie rod requirements.

3.03 TESTING

After installation and before backfilling (and after pressure testing the water main) test the hydrant as follows:

A. Pressure Test

1. Open the hydrant fully and fill with water; close all outlets.
2. To prevent caps from being blow off dry-barrel hydrants and to prevent other possible damage, vent air from the hydrant by leaving one of the caps slightly loose as the hydrant is being filled. After all air has escaped, tighten the cap before proceeding.
3. Apply line pressure.
4. Check for leakage at flanges, nozzles and operating stem.
5. If leakage is noted, repair or replace components or complete hydrant until no leaks are evident.

B. Drainage Test for Dry-Barrel Hydrants

1. Following the pressure test, close hydrant.
2. Remove one nozzle cap and place pylon or hand over nozzle opening.
3. Drainage rate should be sufficiently rapid to create a noticeable suction.
4. After backfilling, operate the hydrant to flush out any foreign material.
5. Tighten nozzle caps, then back them off slightly so that they will not be excessively tight; leave tight enough to prevent removal by hand

3.04 PAINT

After installation and backfilling paint the hydrant as follows:

A. Paint all of the hydrant that is above the bury line in accordance with the local operations standards. Touch up paint (as specified by the OWNER) shall be applied upon completion of installation as needed. Take extreme care to ensure that paint is not applied on the “O” ring under the top operating nut and not on the threads of the hydrant nozzles and caps. If paint comes in contact with the threads and/or O Ring the Contractor shall remove all paint from the threads of the hydrant nozzles and caps, and replace the “O” ring at the Contractor’s expense.

END OF SECTION

SECTION 15185

ABANDONMENT OF MAINS AND HYDRANTS

PART 1: GENERAL

1.01 GENERAL

A. Upon completion, testing and satisfactory operation of the new mains and connections transfer all services from main to be abandoned to the new main, make designated connections to existing water lines, and install new hydrants. Then cut the existing pipeline to provide a break between the portion of the system remaining in use and the portion to be abandoned, remove all hydrants designated to be abandoned and cap all remaining live ends of the existing mains including hydrant laterals. Completely cover new hydrants with polywrap until the designated hydrants are to be abandoned to prohibit use of the new hydrants until the existing hydrants are removed. Remove and deliver hydrants to the OWNER or disposed of as directed by the ENGINEER. Remove valve boxes of abandoned valves as directed by the Engineer.

B. Cutting and Plugging (Capping)

Cut the existing pipe at the point shown on the plans or designated by the ENGINEER. The method of cutting shall be approved by the ENGINEER. The plugs and/or caps used in connection with the work under this item shall be either mechanical joint or slip joint as compatible with the pipe being capped and shall be manufactured in accordance with AWWA Specification C-110. After the plug or cap is installed, provide the required blocking to adequately brace the plug or cap. Blocking may be used temporarily against the abandoned pipe. However, the permanent blocking shall be installed such that future disturbances of the abandoned pipe shall not affect the permanent blocking. After the water line has been plugged or capped and the permanent blocking has been installed, backfill the excavation as specified under Section 02210.

1.02 REFERENCES

AWWA M16 Manual, Work practices for Asbestos Cement Pipe

PART 2: PRODUCTS

Not Used

PART 3: EXECUTION

Where AC pipe removal is required, pipe cutting and removal shall only be handled by a company specialized in handling AC pipe that will strictly adhere to the AWWA M16 Manual, Work practices for Asbestos Cement Pipe.

END OF SECTION

SECTION 15191

AIR RELEASE, BLOW-OFF OUTLETS AND RELATED COMPONENTS
(Contractor Furnished)

PART 1: GENERAL

1.01 SCOPE

Furnish and install air release and blow-off outlets at the locations shown on the Drawings or as directed by the Engineer.

1.02 SUBMITTALS

Submit shop drawings and manufacturer's literature for equipment to be supplied to the Engineer for approval in accordance with Specification Section 1300. All Products shall meet the requirements of NSF 61.

1.03 REFERENCES

Refer to current AWWA Standards:
AWWA Standard for Air-Release, Air/Vacuum, and Combination Air Valves for waterworks Service C512

PART 2: PRODUCTS

2.01 COMBINATION AIR/VACUUM RELEASE VALVES

Provide 1" APCO Model No. 143C as manufactured by Valve and Primer Corporation (Schaumburg, IL) or 1" Valvematic (Elmhurst, IL) Model 201C.2 for mains 12" and smaller unless noted otherwise on the plans. Provide 2" APCO Model No. 145C as manufactured by Valve and Primer Corporation or Valvematic Model 202C.2 for mains 16" and larger unless noted otherwise on the plans. Combination valves shall be double acting to prevent accumulation of air in the pressurized main and to permit air to enter the pipe when pressure seriously drops. Bodies shall be cast iron with stainless steel floats.

2.02 BLOW OFF FLUSHING HYDRANT ASSEMBLY

Blow off assembly for underground applications shall be designed to fit within a standard valve box. In areas prone to cold weather they shall be self draining and non-freezing. All working parts shall be serviceable from above with no digging required. They shall be operated such that the device goes from full open to full close in a ¼ turn clockwise turn. Approved types of flushing hydrants are Tru-Flo Model TF 500 by the Kupferle Foundry or equal. Blow off Flushing Hydrant Assembly shall be installed on 6" and smaller dead end main installations as shown on the plans or as directed by the Engineer.

2.03 COPPER PIPE

Copper pipe shall be Type L or Type K, as specified in plans, meeting the requirements of ASTM Standard B88.

2.04 CORPORATION STOPS

Corporation stops shall be of the brass ball valve type manufactured in accordance with AWWA Standard C800. The inlet connection shall have standard AWWA tapered threads unless otherwise required by the Engineer. The outlet connection shall be a compressed fitting end. The size shall be 2" and shall match the size of specified copper pipe material.

Acceptable manufacturers and model numbers are:

- Ford Meter Box Company - FB400 thru FB1600
- Mueller – B-25000
- A.Y. McDonald – 4701B Series

2.05 CURB STOPS

Curb stops shall be bronze body construction, ball valves, with Double O-ring stem seals. Curb stops shall conform to AWWA Standard C800. End connections shall be suitable for flared copper connection. If required by the Engineer, valves shall be furnished with square gate valve operating nuts. The size shall be 2" and shall match the size of specified copper pipe material.

Acceptable manufacturers and model numbers:

- Ford Meter Box Company – B22 Series
- Mueller - B-25204
- A.Y. McDonald - 6100 Series

2.06 CURB BOXES

Curb boxes shall be standard cast iron, sliding or screw type, 2-1/2" as required, complete with lid and head bolt. Boxes shall be adjustable from 18-inches to 66-inches. The box size will be determined by the Engineer.

Acceptable manufacturers:

- Bingham & Taylor
- Mueller
- Handley Industries
- Clay & Bailey
- A.Y. McDonald
- Quality Water Products

2.07 MISCELLANEOUS LINE FITTINGS

Miscellaneous line fittings such as couplings, adaptors, saddles, bends, plugs, water service electrical insulators, etc. shall conform to AWWA Standard C800.

Acceptable manufacturers:

- Ford Meter Box
- Mueller
- A.Y. McDonald

PART 3: EXECUTION

3.01 INSTALLATION

See Specification Section 15000 for pipe installation. See detail drawings showing installation details for air/vacuum release valve assemblies and air blow-off assemblies. See section 15200 for information about selected components (copper pipe, corporation stops, curb stops, curb boxes) common to service lines.

3.02 INSTALLATION OF CORPORATION STOPS

Use experienced craftsmen familiar with installation of water lines when tapping water mains. Make all taps with a suitable tapping machine (Mueller, Ford, Hays or Dresser type) using the proper combined drill and tap.

Inspect corporation stops for cleanliness, damaged threads, and proper operation of the ball valve prior to installation. Do not install corporation stops that fail this inspection.

The main may be vertically tapped at the twelve o'clock position on the horizontal centerline on the top of the pipe as shown on Detail Drawings. Install all corporation stops utilizing an approved tapping saddle as listed in Section 15200.2.06. No directing tapping of the main is allowed.

Use the procedure outlined in AWWA Standard C600 for installing taps on grey iron or ductile iron mains encased in polyethylene.

Excavate, backfill, and restore the surface in accordance with Division 2 of these Specifications.

Install copper pipe between the corporation stop and the curb stop or air release valve location making only gradual changes in grade or alignment, as required. Do not make bends greater than 15 degrees in any direction.

Open the corporation stop slowly to fill the line. Perform a visual leak inspection of all piping, fittings, and taps after all air is removed and prior to backfilling. Zero leakage is allowed in 10 minutes.

Provide polyethylene encasement, or other protective wrap approved by the Engineer, on all lines (pipe, valves, stops, etc.). Polyethylene encasement shall extend along the entire length of the line that is buried.

Install the curb box centered over the nut. Install and adjust the curb boxes to be flush with finished grade. (As applicable)

END OF SECTION

SECTION 15200

SERVICE LINES
(Contractor Furnished)

PART 1: GENERAL

1.01 SCOPE

Furnish and install service lines originating at the water main and terminating at a curb stop connection in accordance with the Drawings and Section 01000 Summary of Work and Section 01011 Specifications Special Conditions. This Specification Section does not include service lines or meter installations beyond the curb stop. Refer to Standard Detail 0201-0601-SD47 for a typical service line installation.

1.02 RELATED WORK

Specification Section 15000 - Piping - General Provisions.

1.03 REFERENCES

Refer to current AWWA Standards:
AWWA Standard for Underground service Valves and Fittings C800

PART 2: PRODUCTS

All products described below shall meet the requirements of NSF 61.The materials for potable water facilities including solder joints, copper, brass and all other types of material shall meet current Federal, State, and Municipal regulations.

Research has documented that certain pipe materials (such as polyethylene) and certain elastomers (such as those used in gasket material and packing glands) may be subject to permeation by lower-molecular weight organic solvents or petroleum products. Products supplied under this Specification Section assume that petroleum products or organic solvents will not be encountered. If during the course of pipeline installation the Contractor identifies, or suspects the presence of petroleum products or any unknown chemical substance, notify the Engineer immediately. Stop installing piping in the area of suspected contamination until direction is provided by the Enginee

2.01 COPPER SERVICE LINE MATERIAL

Copper pipe shall be Type L or Type K, as specified, meeting the requirements of ASTM Standard B88. The pipe size (3/4", 1", 1-1/2", or 2") and type are to be determined by the Engineer. Type K is normally required in corrosive environments where polyethylene is not allowed.

2.02 POLYETHYLENE SERVICE LINE MATERIAL

Polyethylene service line material shall be Class 200 (minimum), ultra high molecular weight, conforming to AWWA Standard C901. Pipe sizes (3/4", 1", 1-1/2" and 2", copper tube size (CTS) or iron pipe size (IPS)) to be determined by the Engineer.

Acceptable manufacturers:

- Endot Industries (EndoPure PE-3408 only)
- J-M Manufacturing
- KWH Pipe
- Uponor Aquapex

2.03 CORPORATION STOPS

Corporation stops shall be of the brass, ball valve type manufactured in accordance with AWWA Standard C800 or as specified in Section 01011 Specifications Special Conditions. The inlet connection shall have standard AWWA tapered threads unless otherwise required by the Engineer. The outlet connection shall be copper or brass compression connection end or pack joint for polyethylene pipe, as required. Dielectric unions are required when metallic service lines are connected to metallic water mains. Dielectric unions are not required for non-metallic service lines. The sizes shall range from 1/2" to 2" and shall match the size of specified service line material.

Acceptable manufacturers and model numbers are:

- Ford Meter Box Company - FB400 thru FB1600
- Mueller - B-25000
- A.Y. McDonald – 4701B Series

2.04 CURB STOPS

Curb stops shall be bronze body construction, ball valves, with Double O-ring stem seals. Curb stops shall conform to AWWA Standard C800. End connections shall be suitable for copper or brass compression connection or pack joint for polyethylene pipe, as required. Sizes shall be from 3/4" to 2" and shall match the service line size.

Acceptable manufacturers and model numbers:

- Ford Meter Box Company – B22 Series
- Mueller - B-25204
- A.Y. McDonald - 6100 Series

2.05 CURB BOXES

Curb boxes shall be standard cast iron or A.B.S. Plastic, sliding or screw type, 2-1/2" as required, complete with " Water" imprint lid and head bolt. Boxes shall be adjustable from 32-inches to 48-inches. The box size will be determined by the Engineer.

Acceptable manufacturers:

- Bingham & Taylor
- Mueller
- Handley Industries
- Clay & Bailey
- A.Y. McDonald Quality Water Products

2.06 MISCELLANEOUS SERVICE LINE FITTINGS

Miscellaneous service line fittings such as couplings, adapters, saddles, bends, plugs, service line electrical insulators, etc. shall conform to AWWA Standard C800 or as specified in Section 01011 Specifications Special Conditions.

Acceptable manufacturers:

- Ford Meter Box
- Mueller-Service Saddles ¾"-2" model BR2W- For use on DI and C-900 PVC
- A.Y. McDonald- Service Saddles ¾"-2"-model 3845J- For use on DI and C-900 PVC

*See Section 01011 Specifications Special Conditions for additional approved material to be used per district requirements.

PART 3: EXECUTION

3.01 INSTALLATION OF CORPORATION STOPS

Use experienced craftsmen familiar with installation of water service lines when tapping water mains. Make all taps with a suitable tapping machine (Mueller, Ford, Hays or Dresser type) using the proper combined drill and tap. Hand held drilling equipment is not acceptable.

Before making the tap, inspect corporation stops for cleanliness, damaged threads, and proper operation of the ball valve prior to installation. Do not install corporation stops that fail this inspection.

The main may be tapped along the top half of the pipe as directed by the Engineer or as shown on Standard Detail 0201-0601-SD47. Use a tapping saddle when the water main wall thickness or material (plastic, concrete or A-C pipeline material) make it unsuitable for direct tapping. All taps shall utilize a tapping saddle unless otherwise approved by the engineer. Verify saddle use with Engineer.

In the case of multiple services of small diameter (less than 2" diameter), corporation stops shall be at least 12 inches apart and at least 22-1/2 degrees above or below the location of any adjacent tap(s) and curb stops and boxes shall be at least one foot apart. In the case of large diameter multiple services, tap at least 24 inches apart and at least 22-1/2 degrees above or below the location of any adjacent tap(s).

Install all corporation stops so that between 2 and 3 threads extend beyond the inside wall of the main. If necessary, make a test tap with the boring bar marked to the proper depth. The corporation stop, when properly installed, will not be shouldered with the main. Do not use lubricants of any type when installing the corporation stop.

Use the procedures outlined in AWWA Standard C600-5 Section 4.8 for installing taps on grey iron or ductile iron mains encased in polyethylene.

3.02 INSTALLATION OF SERVICE LINE AND FITTINGS

Excavate the service line trench in accordance with Division 2 of these Specifications. Where augering or moling is permitted follow guidelines provided by the equipment manufacturer including making a proper size hole to launch and receive the unit. If moling or augering is employed, take appropriate precautions to avoid damaging other utilities and disturbing the unexcavated surface.

Install service line between the tap connection and the curb stop (if applicable) location making only gradual changes in grade or alignment as required. Sharp bends (greater than 15 degrees) in any direction are not allowed unless approved by the Engineer. 1-1/2" and 2" service lines may be installed using three (3) 1-inch corporation stops and a 3-branch connection, only with approval of the engineer. This is in lieu of installing a 1-1/2" or 2" corporation stop and saddle. Installation shall be in accordance with Specification Section 15000 and Standard Details and in accordance with current Federal, State, and Municipal regulations.

Install all services straight and at right angles to the main. If this cannot be accomplished, provide the Owner with accurate as-built dimensions to the tee or corporation stop. The Contractor may be required to install tracer wire in accordance with Section 02558 from the water main to the curb box/meter box.

All Polyethylene service line connections shall use insert stiffeners of the appropriate length and size. All Polyethylene service lines shall be buried with tracer wire in accordance with Section 02558.

3.03 INSTALLATION OF CURB STOPS

Install curb stops with the operating nut in the vertical position and the curb box centered over the nut. Install curb boxes plum and adjusted to be flush with finished grade. Install and lock curb boxes immediately after installation.

After completion of service line installation, but prior to backfilling, open the corporation stop slowly to fill the line. When the line is full and all air has been removed, completely open the corporation and close the curb stop. Visually inspect that all piping, fittings, and taps for leaks. Backfill and restore the surface the service line trench in accordance with Division 2 of these Specifications.

3.04 POLYETHYLENE ENCASEMENT

Provide polyethylene encasement, or other protective wrap approved by the Engineer, on all new metallic service lines and fittings (pile, valves, stops, etc.) when a

metallic service line is connected to a metallic water main. Polyethylene encasement shall extend for a minimum clear distance of three (3) feet away from the water main and join the polyethylene encasement that is installed on the water main as shown in the DIPRA Polyethylene Encasement Installation Guide. Encasement material and installation shall be per Specification Section 15131 and AWWA Standard C105.

END OF SECTION

SECTION 15205

SERVICE LINES
(Owner Furnished)

PART 1: GENERAL

1.01 SCOPE

Install Owner supplied service lines originating at the water main and terminating at a curb stop connection in accordance with the Drawings and Section 01011 Specifications Special Conditions. This Specification Section does not include service lines or meter installations beyond the curb stop. Refer to Standard Detail 0201-0601-SD47.

1.02 RELATED WORK

Specification Section 15000 - Piping - General Provisions.

PART 2: PRODUCTS

Service line material shall be furnished by the Owner for installation by the Contractor. Refer to Specification Section SSC-1000.1.03 for material to be furnished by the Owner. All products described below shall meet the requirements of NSF 61.The materials for potable water facilities including solder joints, copper, brass and all other types of material shall meet current Federal, State, and Municipal regulations.

PART 3: EXECUTION

3.01 INSTALLATION OF CORPORATION STOPS

Use experienced craftsmen familiar with installation of water service lines when tapping water mains. Make all taps with a suitable tapping machine (Mueller, Ford, Hays or Dresser type) using the proper combined drill and tap. Hand held drilling equipment is not acceptable.

Before making the tap, inspect corporation stops for cleanliness, damaged threads, and proper operation of the ball valve prior to installation. Do not install corporation stops that fail this inspection.

The main may be tapped along the top half of the pipe as directed by the Engineer or as shown on Standard Detail 0201-0601-SD47. Use a tapping saddle when the water main wall thickness or material (plastic, concrete or A-C pipeline material) make it unsuitable for direct tapping. All taps shall utilize a tapping saddle unless otherwise approved by the engineer. Verify saddle use with Engineer.

In the case of multiple services of small diameter (less than 2” diameter), corporation stops shall be at least 12 inches apart and at least 22-1/2 degrees above or below the location of any adjacent tap(s) and curb stops and boxes shall be at least one foot apart. In the case of large diameter multiple services, tap at least 24 inches apart and at least 22-1/2 degrees above or below the location of any adjacent tap(s).

Install all corporation stops so that between 2 and 3 threads extend beyond the inside wall of the main. Use the procedures outlined in AWWA Standard C600 for installing taps on grey iron or ductile iron mains encased in polyethylene. If necessary, make a test tap with the boring bar marked to the proper depth. The corporation stop, when properly installed, will not be shouldered with the main. Do not use lubricants of any type when installing the corporation stop. Dielectric unions shall be installed to prevent transfer of any electrical stray currents to metallic water main.

Use the procedures outlined in AWWA Standard C600 for installing taps on grey iron or ductile iron mains encased in polyethylene.

3.02 INSTALLATION OF SERVICE LINE AND FITTINGS

Excavate the service line trench in accordance with Division 2 of these Specifications. Where auguring or moling is permitted follow guidelines provided by the equipment manufacturer including making a proper size hole to launch and receive the unit. If moling or auguring, take appropriate precautions to avoid damaging other utilities and disturbing the unexcavated surface.

Install service line between the tap connection and the curb stop (if applicable) location making only gradual changes in grade or alignment as required. Sharp bends (greater than 15 degrees) in any direction are not allowed unless approved by the Engineer. 1-1/2" and 2" service lines may be installed using three (3) 1-inch corporation stops and a 3-branch connection. This is in lieu of installing a 1-1/2" or 2" corporation stop. Installation shall be in accordance with Specification Section 15000 and Standard Detail 0201-0601-SD47 and in accordance with current Federal, State, and Municipal regulations.

Install all services straight and at right angles to the main. If this cannot be accomplished, provide the Owner with accurate as-built dimensions to the tee or corporation stop. The Contractor may be required to install tracer wire in accordance with Section 02558 from the water main to the curb box/meter box.

All Polyethylene service line connections shall use insert stiffeners of the appropriate length and size. All Polyethylene service lines shall be buried with tracer wire in accordance with Section 02558.

3.03 INSTALLATION OF CURB STOPS

Install curb stops with the operating nut in the vertical position and the curb box centered over the nut. Install curb boxes plum and adjusted to be flush with finished grade. Install and lock curb boxes immediately after installation.

After completion of service line installation, but prior to backfilling, open the corporation stop slowly to fill the line. When the line is full and all air has been removed, completely open the corporation and close the curb stop. Visually inspect that all piping, fittings, and taps for leaks. Backfill and restore the surface the service line trench in accordance with Division 2 of these Specifications.

3.04 POLYETHYLENE ENCASEMENT

Install polyethylene encasement, or other protective wrap approved by the Engineer, on all metal service lines and fittings (pile, valves, stops, etc.) when they are made of different materials than the water main. When the polyethylene is applied on the main, it shall extend for a minimum clear distance of three (3) feet away from the main when services are not being renewed or extend from the main connection to and including the curb stop or curb meter setter for all new copper service lines. Encasement material and installation shall be per Specification Section 15131 and AWWA Standard C105.

END OF SECTION

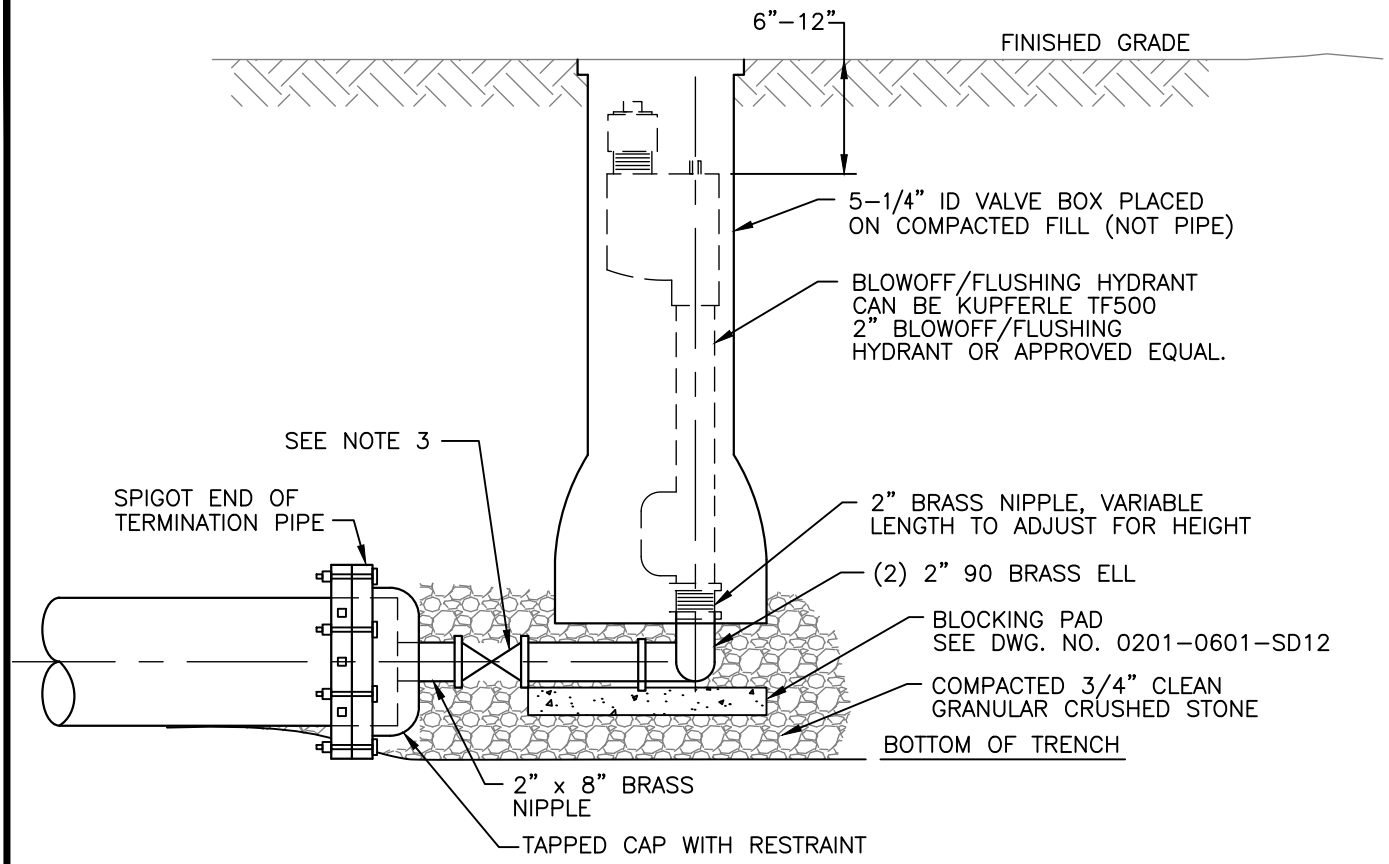

ELEVATION A–A

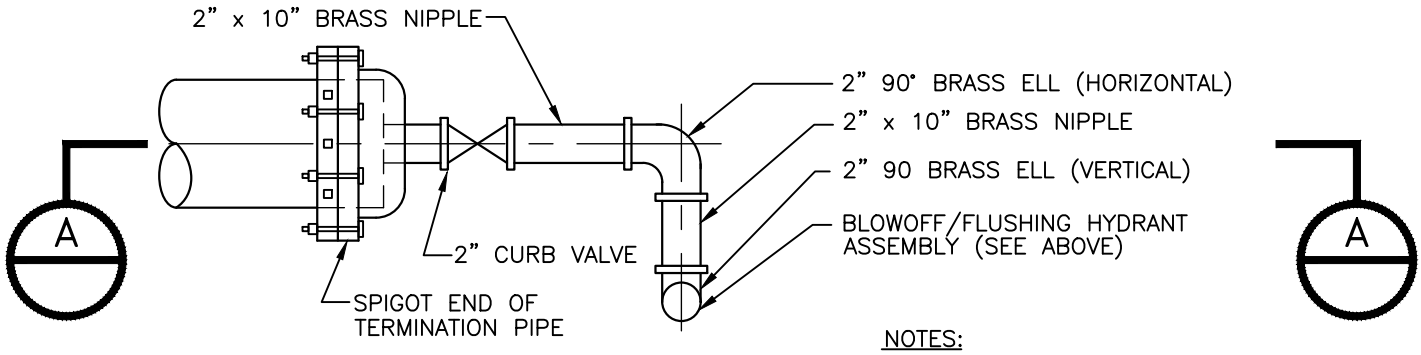

PLAN VIEW

NOTES:

1. POLYETHYLENE ENCASEMENT ON ALL DI AND BRASS PIPE.
2. SEE DWG. NO. 0201–0601–SD08 FOR RESTRAINT OF CAP.
3. CURB BOX FOR VALVE NOT SHOWN.
4. TO BE USED ON 6" AND SMALLER DEAD END MAINS AS SHOWN ON THE PLANS OR AS APPROVED BY THE ENGINEER.

REVISIONS

MISSOURI AMERICAN WATER STANDARD CIVIL
BLOWOFF / FLUSHING HYDRANT ASSEMBLY DETAIL

MISSOURI AMERICAN WATER
ST. LOUIS, MO. 63141

MISSOURI AMERICAN WATER ENGINEERING
727 CRAIG ROAD
ST. LOUIS, MO. 63141

AMERICAN WATER

DRAWN BY MEG
PROJECT ENG'R
APPROVED
DATE 11–30–18
PROJECT IP
USE DIMENSIONS ONLY
SCALE N.T.S.

USE APPROVED DRAWINGS ONLY FOR CONSTRUCTION PURPOSES

0201–0601–SD01

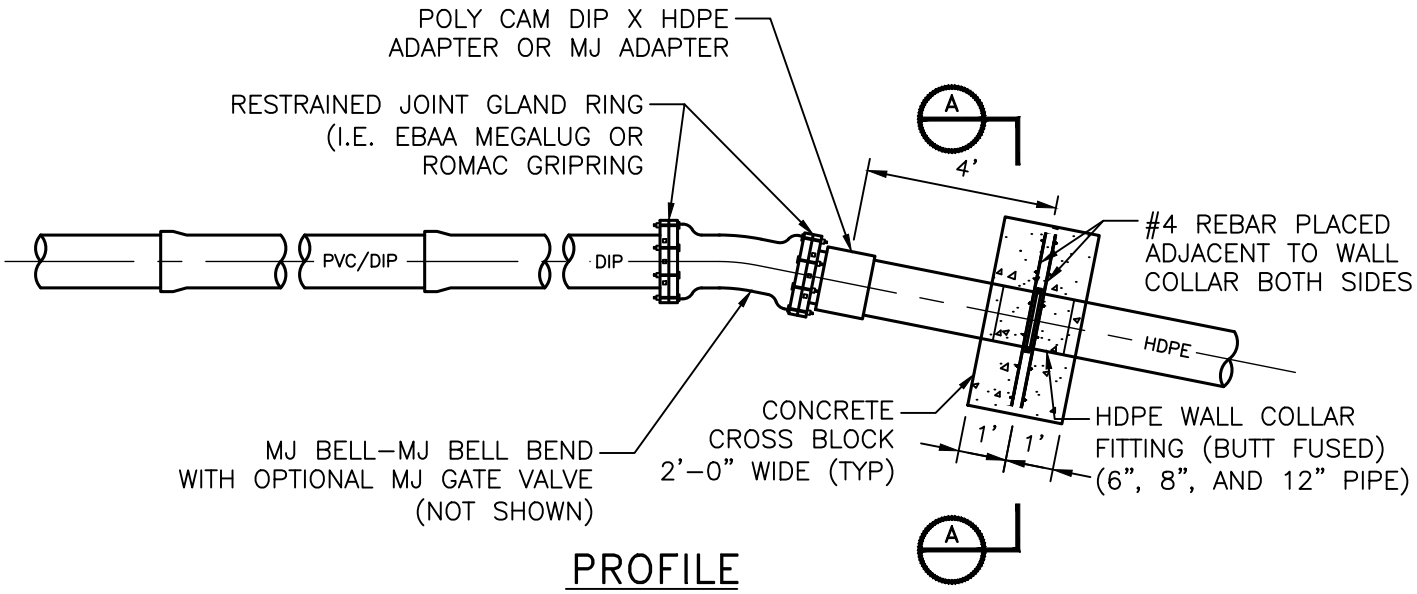

PROFILE

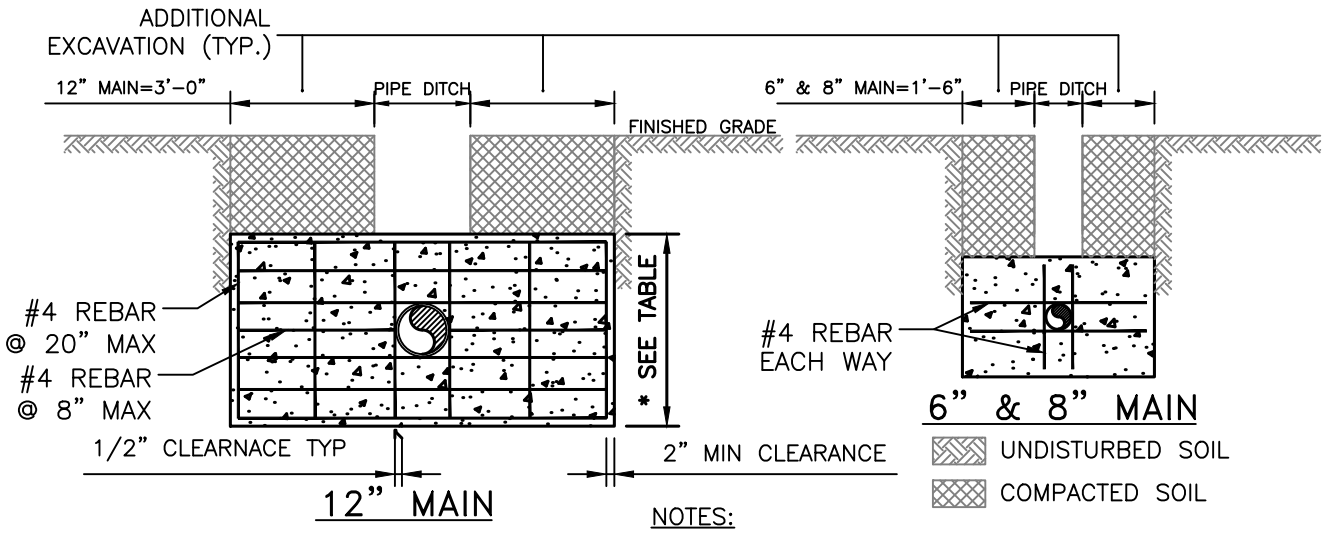

BLOCK DIMENSIONS		
PIPE DIA	WIDTH	HEIGHT
6"	4'-6" MIN	2'-6"
8"	4'-8" MIN	3'-6"
12"	7'-6" MIN	4'-0"
>12"	ASK DESIGN ENGINEER	ASK DESIGN ENGINEER

NOTES:

1. CENTER BLOCK ON PIPE.
2. SEE DWG. NO. 0201-0601-SD04 FOR STANDARD TRANSITION OPTION.
3. BOLTS USED TO RESTRAIN ALL MJ FITTINGS SHALL BE PTFE POLYMER COATED (EX. XYLAN, FLUOROKOTE #1).

BLOCK SECTION A-A

REVISIONS

MISSOURI AMERICAN WATER STANDARD
CIVIL
HDPE TRANSITION
OPTION

MISSOURI AMERICAN WATER
ST. LOUIS, MO. 63141

MISSOURI AMERICAN WATER ENGINEERING
727 CRAIG ROAD
ST. LOUIS, MO. 63141

AMERICAN WATER

DRAWN BY MEG
PROJECT ENG'R
APPROVED

DATE 11-30-18
PROJECT IP

USE DIMENSIONS ONLY
SCALE N.T.S.

USE APPROVED DRAWINGS ONLY
FOR CONSTRUCTION PURPOSES

0201-0601-SD02

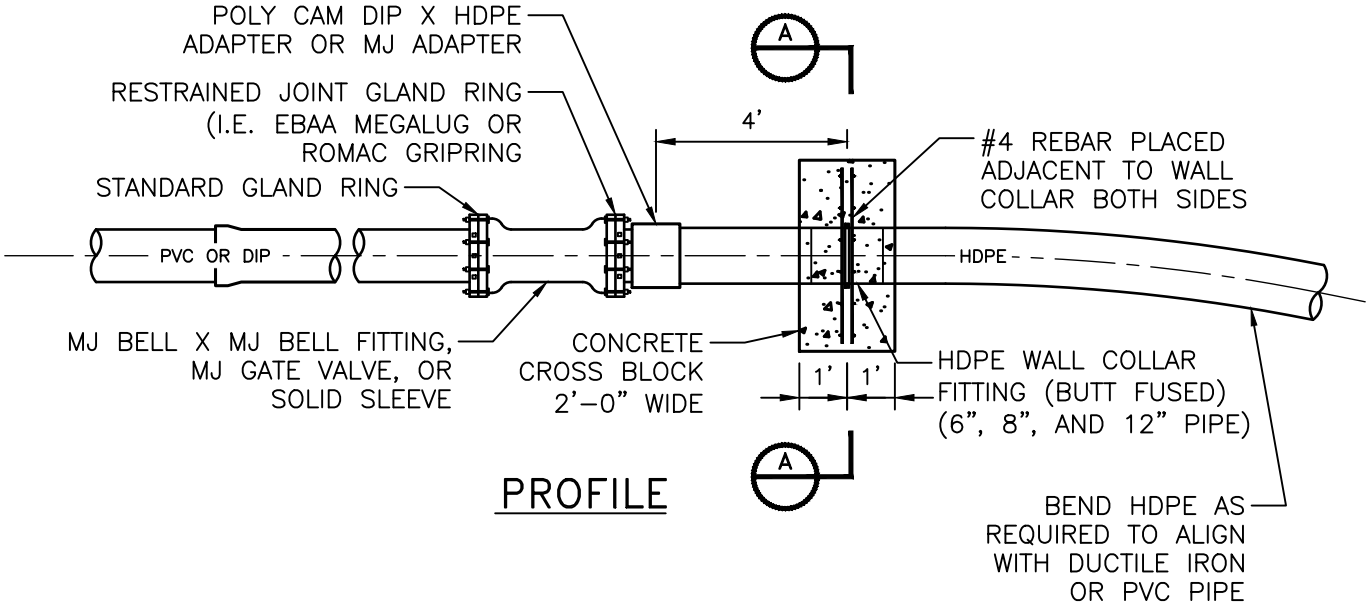

PROFILE

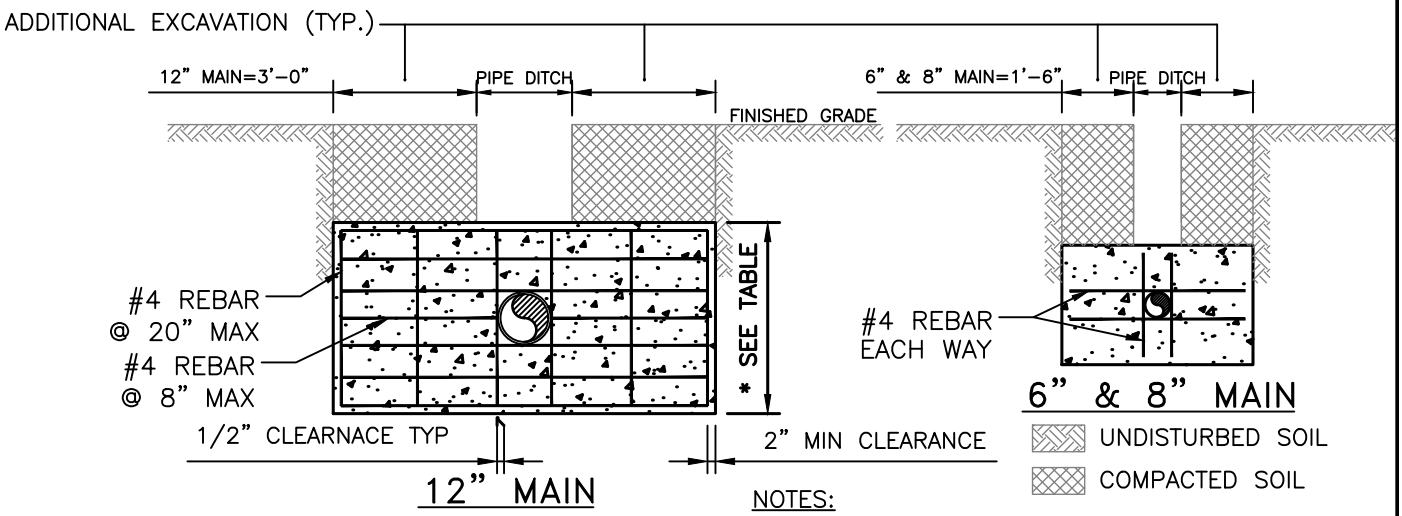

BLOCK DIMENSIONS		
PIPE DIA	WIDTH	HEIGHT
6"	4'-6" MIN	2'-6"
8"	4'-8" MIN	3'-6"
12"	7'-6" MIN	4'-0"
>12"	ASK DESIGN ENGINEER	ASK DESIGN ENGINEER

NOTES:

1. CENTER BLOCK ON PIPE.
2. SEE DWG. NO. 0201-0601-SD02 FOR OTHER TRANSITION OPTIONS.
3. BOLTS USED TO RESTRAIN ALL MJ FITTINGS SHALL BE PTFE POLYMER COATED (EX. XYLAN, FLUOROKOTE #1).

BLOCK SECTION A-A

REVISIONS

MISSOURI AMERICAN WATER STANDARD
CIVIL
HDPE TRANSITION
(THRUST RESTRAINT)

MISSOURI AMERICAN WATER
ST. LOUIS, MO. 63141

MISSOURI AMERICAN WATER ENGINEERING
727 CRAIG ROAD
ST. LOUIS, MO. 63141

AMERICAN WATER

DRAWN BY MEG
PROJECT ENG'R
APPROVED

DATE 02-14-19
PROJECT IP

USE DIMENSIONS ONLY
SCALE N.T.S.

USE APPROVED DRAWINGS ONLY FOR CONSTRUCTION PURPOSES

0201-0601-SD04

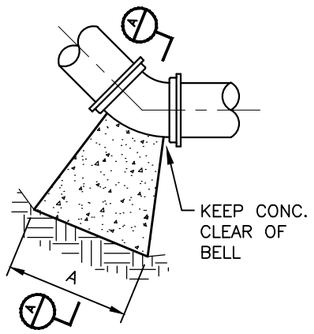

BENDS

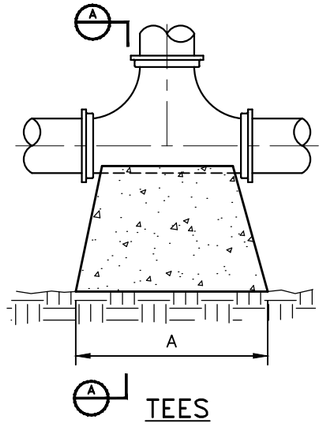

TEES

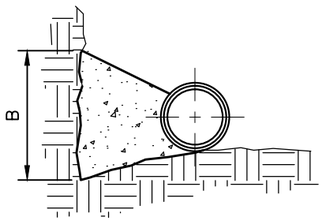

SECTION A
BENDS AND
TEES

NOTES:

1. COVER OVER TOP OF PIPE SHALL BE 42". IF GRADING PLANS RECEIVED BY THE ENGINEER/OWNER WITH THE REQUEST FOR WATER MAIN LAYOUT, INDICATE ADJUSTMENTS TO EXISTING GRADE, THEN PIPE SHALL BE INSTALLED TO MEET MINIMUM AND MAXIMUM COVER FROM PROPOSED GRADES SHOWN ON SAID PLANS. TOP OF FINISH CONCRETE TO BE A MINIMUM OF 26" FROM FINISH GRADE.
2. THRUST BLOCKS SHALL BE BUILT AGAINST UNDISTURBED SOIL TO PREVENT MOVEMENT OF FITTING.
3. NO THRUST BLOCKS TO BE PLACED IN SEWER LATERAL DITCHES,.
4. THRUST BLOCKING MUST FIT IN EASEMENT, IN SOME CASES ADDITIONAL RESTRAINT MAY BE REQUIRED.
5. POLYETHYLENE ENCASEMENT ON ALL D.I. PIPE AND FITTINGS.
6. PIPE JOINTS AND BOLTS MUST BE ACCESSIBLE.
7. ALLOW SUFFICIENT CLEARANCE BETWEEN CONCRETE AND BOLTS FOR FUTURE MAINTENANCE.
8. ALL BOLTS SHALL BE PTFE POLYMER COATED BOLTS (EX. XYLAN, FLUOROKOTE #1), MINIMUM 1/2" DIAMETER. COAT EXPOSED ROD WITH APPROVED COATING AFTER CONCRETE HAS SET.
9. THRUST BLOCKING DETAILS ARE SHOWN HERE FOR TYPICAL INSTALLATIONS. IN SOME CASES, ADDITIONAL RESTRAINT MAY BE REQUIRED.
10. PORTLAND CEMENT CONCRETE USED FOR THRUST BLOCKS SHALL BE MIN 3000 PSI CONCRETE.
11. FOR UNSTABLE SOIL CONDITIONS, CHECK WITH ENGINEER FOR THRUST BLOCK DIMENSIONS.
12. FOR MAIN SIZES GREATER THAN 12", SEE ENGINEER FOR THRUST BLOCK DIMENSIONS.

REQUIRED MINIMUM BEARING AREA ON UNDISTURBED SOIL

PIPE SIZE	90 DEGREE BENDS AREA (SQ. FT.)	45 DEGREE BENDS AREA (SQ. FT.)	22.5 DEGREE BENDS AREA (SQ. FT.)	11.25 DEGREE BENDS AREA (SQ. FT.)	TEES/PLUGS AREA (SQ. FT.)
6	8.0	4.5	2.0	1.0	6.0
8	14.0	7.5	4.0	2.0	10.0
10	20.5	11.0	6.0	3.0	14.5
12	29.0	16.0	8.0	4.0	20.5

NOTES:

1. BEARING TABLE AREA IS BASED ON 200 PSI MAXIMUM WITH SOIL BEARING CAPACITY OF 2000 LBS/SQUARE FOOT WITH A 1.5 SAFETY FACTOR.
2. FOR HIGHER WATER PRESSURES OR LOWER SOIL PRESSURES, CONSULT ENGINEER FOR ADJUSTMENTS.
3. A SAFETY FACTOR AND ADDITIONAL BEARING AREA MAY BE REQUIRED AS DIRECTED BY THE ENGINEER.
4. FOR DEVELOPER LAY PROJECTS, THE DEVELOPER SHALL VERIFY SOIL BEARING CAPACITIES.
5. SEE DWG. NO. 0201–0601–SD19 AND DWG. NO. 0201–0601–SD20 FOR ADDITIONAL BLOCKING INFORMATION.

REVISIONS

MISSOURI AMERICAN WATER STANDARD
CIVIL
THRUST BLOCK
DETAILS

MISSOURI AMERICAN WATER
ST. LOUIS, MO. 63141

MISSOURI AMERICAN WATER ENGINEERING
727 CRAIG ROAD
ST. LOUIS, MO. 63141

AMERICAN WATER

DRAWN BY KKM
PROJECT ENG'R
APPROVED
DATE 09-16-11
PROJECT IP
USE DIMENSIONS ONLY
SCALE N.T.S.

USE APPROVED DRAWINGS ONLY FOR CONSTRUCTION PURPOSES

0201–0601–SD6

0201–0601–SD6

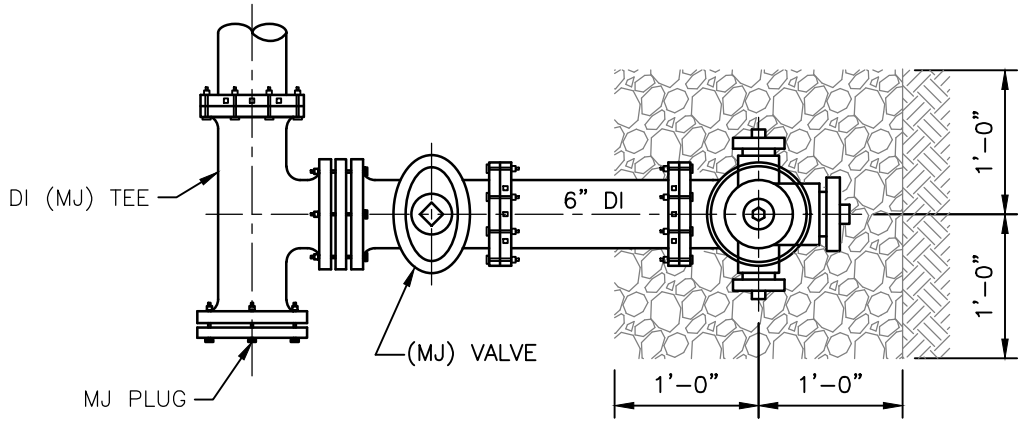

PLAN (FOR 8" – 12" DEAD END MAINS)(SEE NOTE 4)

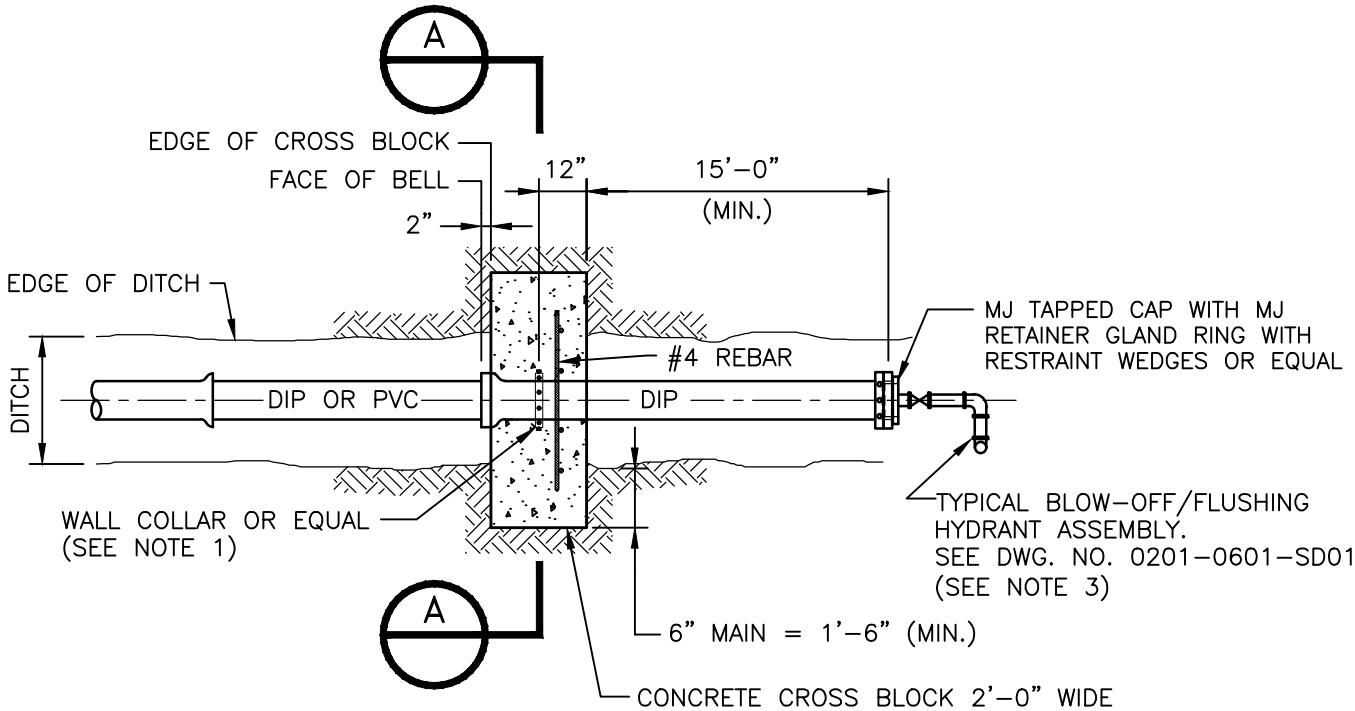

PLAN (FOR 6" DEAD END MAINS)

NOTES:

1. SEE DWG. NO. 0201-0601-SD14 FOR ADDITIONAL BLOCKING DETAILS.
2. FOR WATER MAINS 16" AND LARGER CONSULT ENGINEER FOR BLOCKING DETAIL.
3. TO BE USED ON 6" AND SMALLER DEAD END MAINS AS SHOWN ON THE PLANS OR AS APPROVED BY THE ENGINEER.
4. SEE DWG. NO. 0201-0601-SD08 FOR ADDITIONAL HYDRANT DETAILS. TO BE USED ON 8" – 12" DEAD END MAINS AS SHOWN ON THE PLANS OR AS APPROVED BY THE ENGINEER.

REVISIONS

MISSOURI AMERICAN WATER STANDARD
CIVIL
DEAD-END PVC OR DIP BLOCKING METHOD DETAIL

MISSOURI AMERICAN WATER
ST. LOUIS, MO. 63141

MISSOURI AMERICAN WATER ENGINEERING
727 CRAIG ROAD
ST. LOUIS, MO. 63141

AMERICAN WATER

DRAWN BY MEG
PROJECT ENG'R
APPROVED
DATE 11-30-18
PROJECT IP
USE DIMENSIONS ONLY
SCALE N.T.S.

USE APPROVED DRAWINGS ONLY FOR CONSTRUCTION PURPOSES

0201-0601-SD08

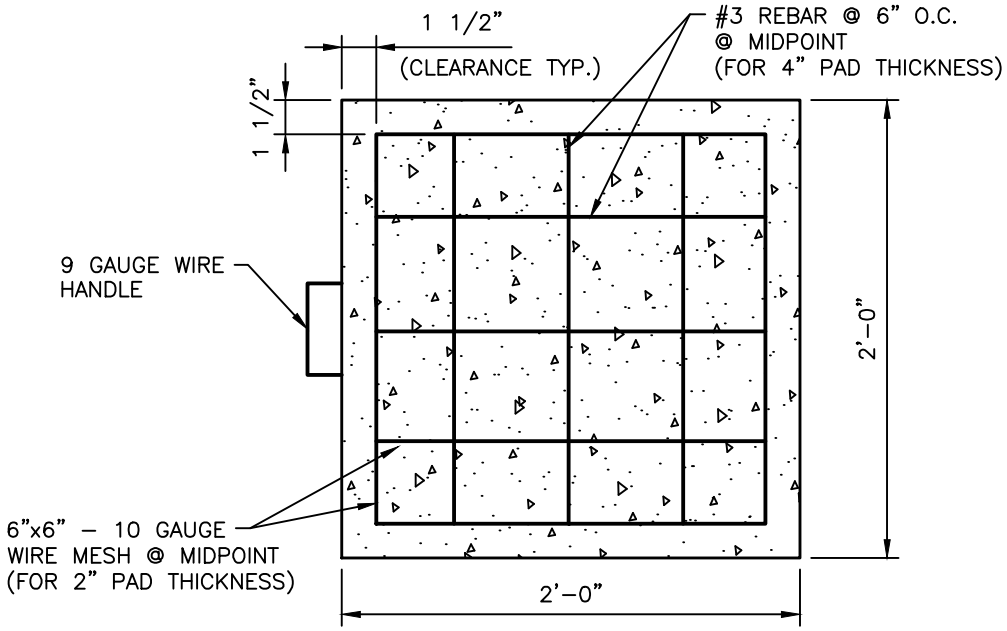

NOTES:

1. PAD THICKNESS = 2" OR 4"
2. PROVIDE CERTIFICATION FOR REINFORCING WIRE AS REQUIRED.

REVISIONS	MISSOURI AMERICAN WATER STANDARD CIVIL PRE-FABRICATED STEEL REINFORCED CONCRETE BLOCKING PAD DETAIL
	MISSOURI AMERICAN WATER ST. LOUIS, MO. 63141
	MISSOURI AMERICAN WATER ENGINEERING 727 CRAIG ROAD ST. LOUIS, MO. 63141
	DRAWN BY KKM PROJECT ENG'R APPROVED DATE 11-13-08 PROJECT IP USE DIMENSIONS ONLY SCALE N.T.S.
	USE APPROVED DRAWINGS ONLY FOR CONSTRUCTION PURPOSES 0201-0601-SD12

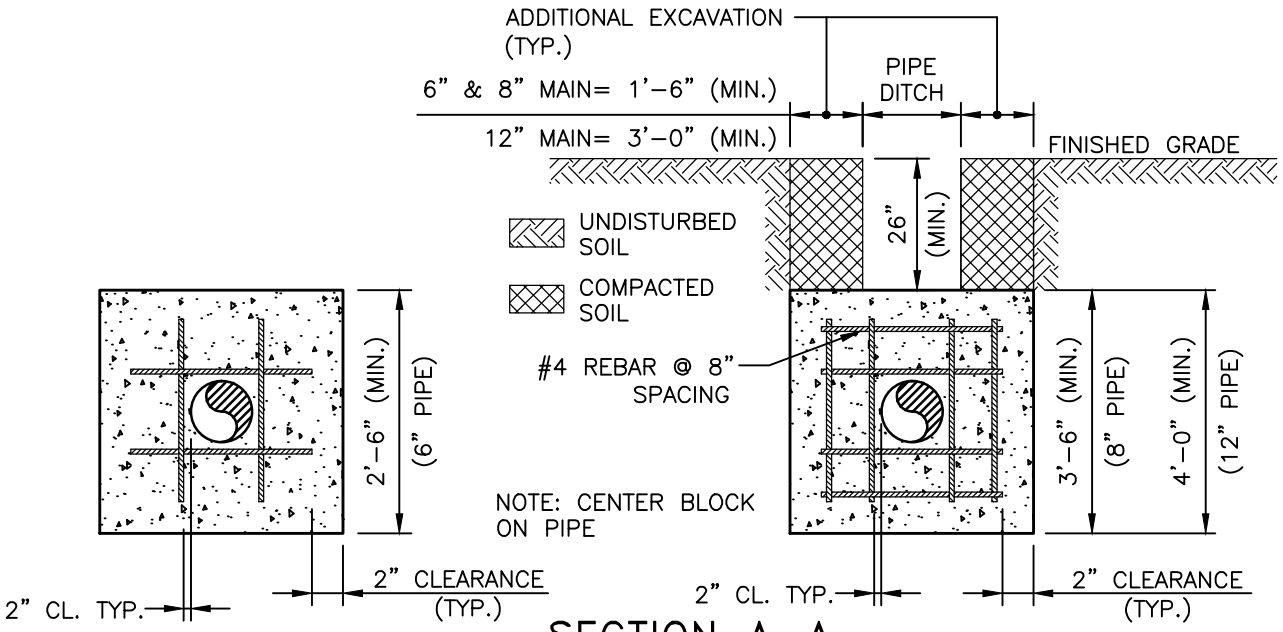

SECTION A-A

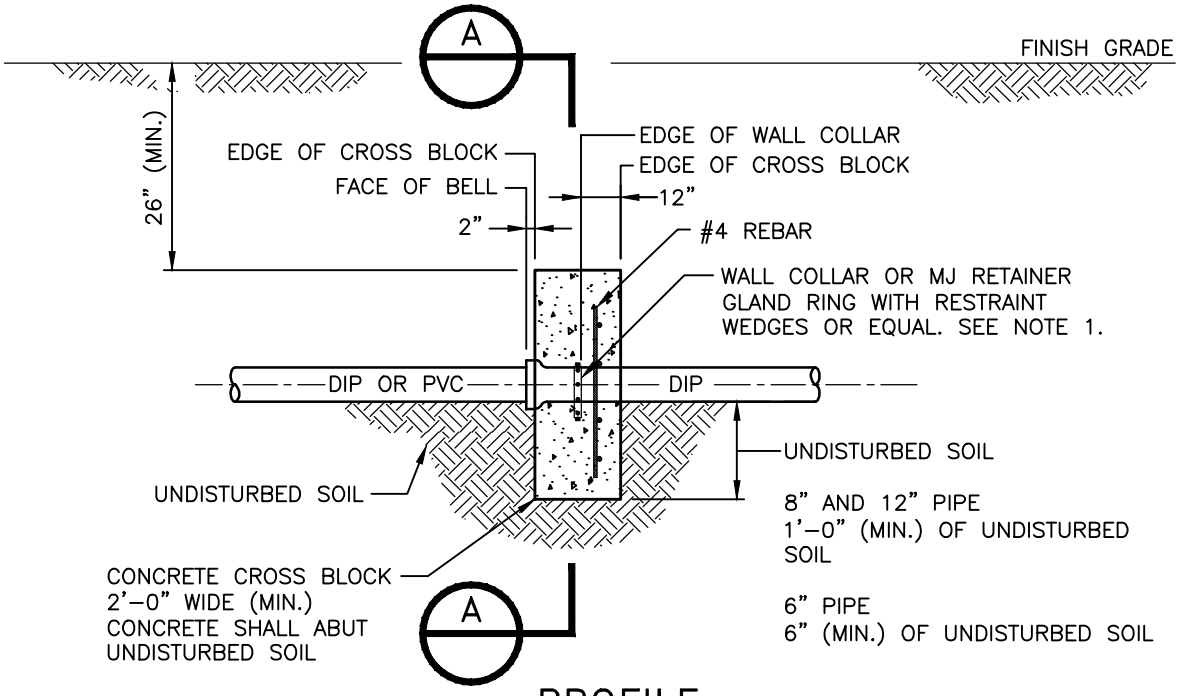

PROFILE

NOTES:

1. SEE DWG. NO. 0201-0601-SD8 FOR ADDITIONAL BLOCKING DETAILS.
2. FOR WATERMAINS 16" AND LARGER CONSULT ENGINEER FOR BLOCKING DETAIL.

REVISIONS

MISSOURI AMERICAN WATER STANDARD CIVIL CROSS BLOCK SIDE VIEW DETAIL

MISSOURI AMERICAN WATER
ST. LOUIS, MO. 63141

MISSOURI AMERICAN WATER ENGINEERING
727 CRAIG ROAD
ST. LOUIS, MO. 63141

AMERICAN WATER

DRAWN BY KKM
PROJECT ENG'R
APPROVED
DATE 01-13-12
PROJECT IP
USE DIMENSIONS ONLY
SCALE N.T.S.

USE APPROVED DRAWINGS ONLY FOR CONSTRUCTION PURPOSES

0201-0601-SD14

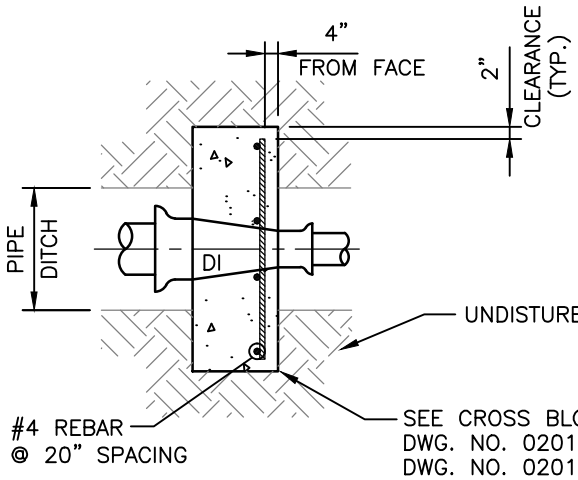

PLAN

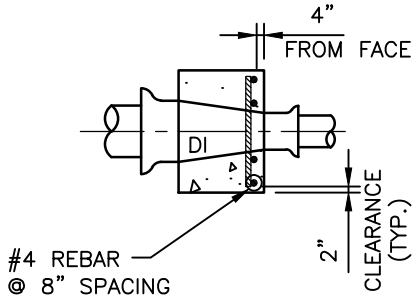

ELEVATION

NOTE:

ONLY BELL TO BELL REDUCERS ARE ACCEPTABLE.

REVISIONS	MISSOURI AMERICAN WATER STANDARD CIVIL REDUCER THRUST BLOCK DETAIL
	MISSOURI AMERICAN WATER ST. LOUIS, MO. 63141
	MISSOURI AMERICAN WATER ENGINEERING 727 CRAIG ROAD ST. LOUIS, MO. 63141
	DRAWN BY KKM PROJECT ENG'R APPROVED DATE 11-13-08 PROJECT IP USE DIMENSIONS ONLY SCALE N.T.S.
	USE APPROVED DRAWINGS ONLY FOR CONSTRUCTION PURPOSES 0201-0601-SD15

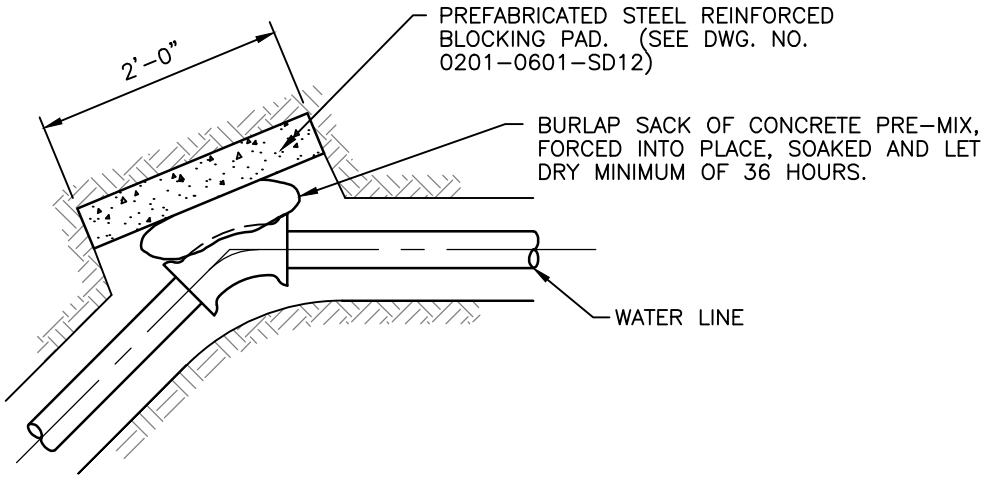

PLAN

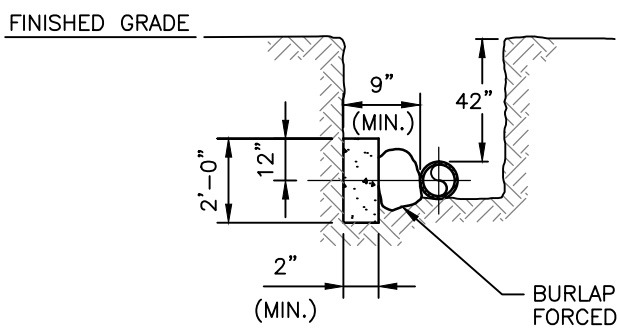

PIPE SIZE

2" – USE 1 SACK (MIN.)
4" – USE 2 SACKS (MIN.)
6" – USE 2 SACKS AND BLOCKING PAD (MIN.)

BURLAP SACK OF CONCRETE PRE-MIX, 90 POUNDS, FORCED INTO PLACE, SOAKED AND LET DRY MINIMUM OF 36 HOURS.

ELEVATION

(FOR 2", 4", AND 6" DIA. PIPE ONLY)

NOTE:

FOR BLOCKING OF PIPE SIZES 8" AND LARGER, SEE DWG. NO. 0201-0601-SD6

REVISIONS	MISSOURI AMERICAN WATER STANDARD CIVIL THRUST BLOCK AT HORIZONTAL BENDS 6" OR LESS DETAIL
	MISSOURI AMERICAN WATER ST. LOUIS, MO. 63141
	MISSOURI AMERICAN WATER ENGINEERING 727 CRAIG ROAD ST. LOUIS, MO. 63141 AMERICAN WATER DRAWN BY KKM PROJECT ENG'R APPROVED DATE 11-13-08 PROJECT IP USE DIMENSIONS ONLY SCALE N.T.S.
	USE APPROVED DRAWINGS ONLY FOR CONSTRUCTION PURPOSES 0201-0601-SD17

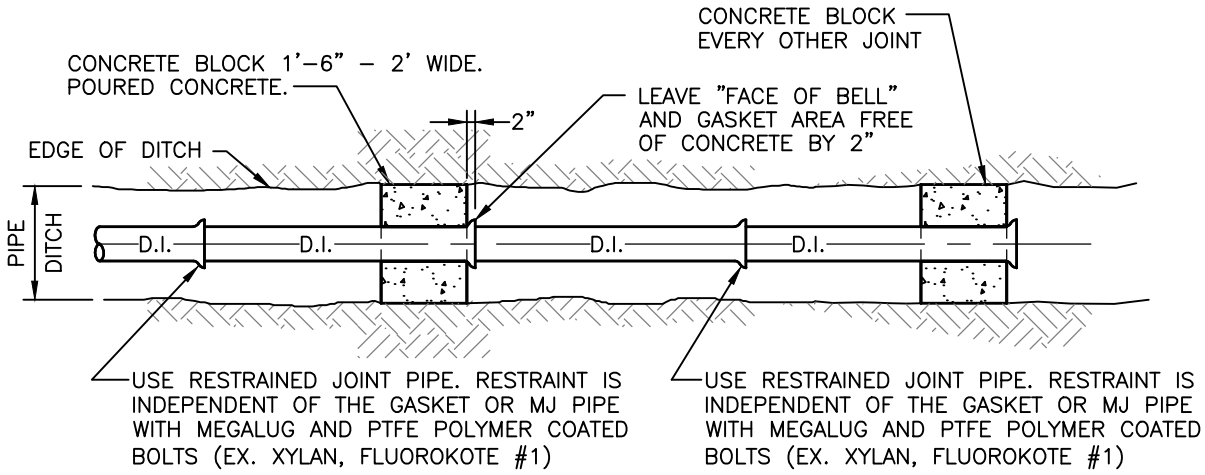

DITCH CHECK FOR SLOPES GREATER THAN 3.5:1 AND LESS THAN 1:1

PLAN

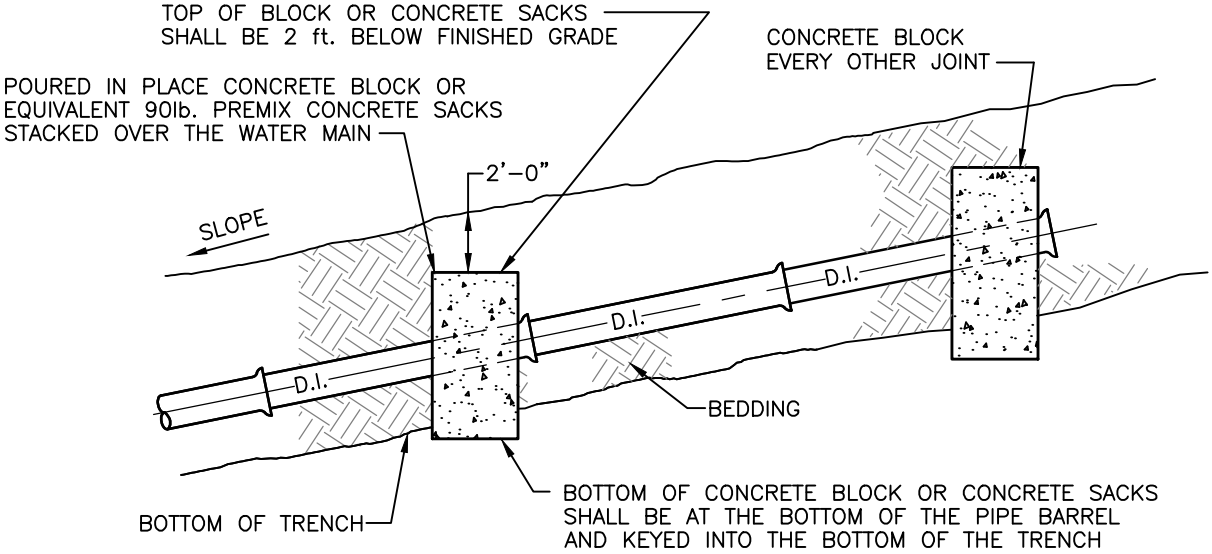

ELEVATION

NOTE:

USE RESTRAINED JOINT PIPE FROM TOE OF SLOPE TO TOP OF SLOPE AND RESTRAINED FITTINGS AT TOP AND BOTTOM.

REVISIONS	MISSOURI AMERICAN WATER STANDARD CIVIL DITCH CHECK FOR SLOPES GREATER THAN 3.5:1 DETAIL
	MISSOURI AMERICAN WATER ST. LOUIS, MO. 63141
	MISSOURI AMERICAN WATER ENGINEERING 727 CRAIG ROAD ST. LOUIS, MO. 63141
	DRAWN BY KKM PROJECT ENG'R APPROVED DATE 09-16-11 PROJECT IP USE DIMENSIONS ONLY SCALE N.T.S.
	USE APPROVED DRAWINGS ONLY FOR CONSTRUCTION PURPOSES 0201-0601-SD18

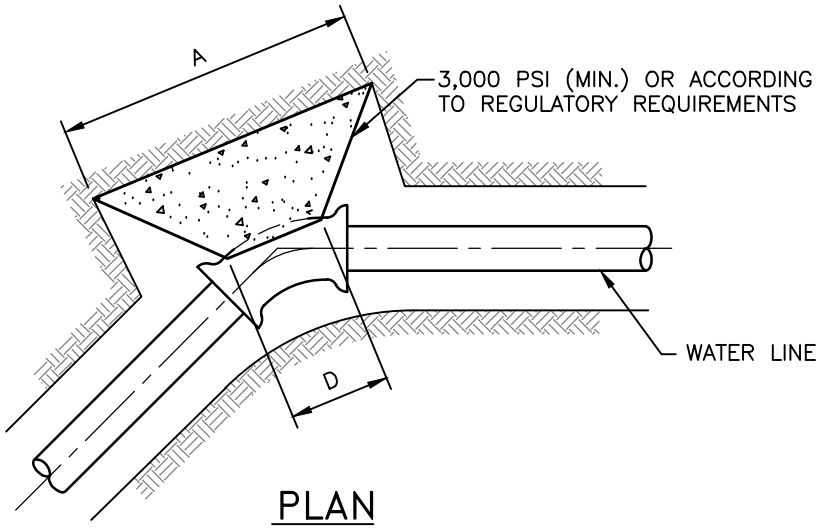

PLAN

SEE DWG. NO. 0201–0601–SD20

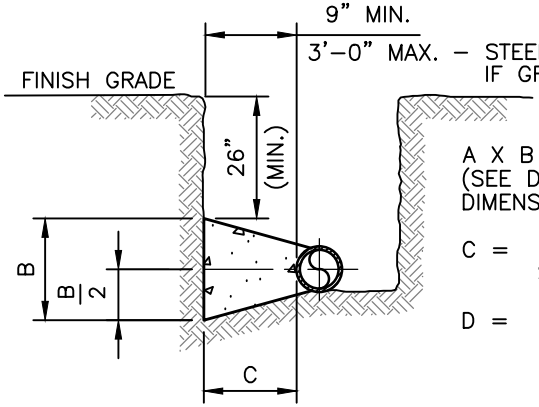

A X B = MINIMUM BEARING AREA. (SEE DWG. NO. 0201–0601–SD6 FOR DIMENSIONS)

C = FROM EDGE OF PIPE TO SOIL BEARING WALL

D = DIAMETER OF PIPE (MIN.)

ELEVATION

* BEARING AREAS ARE BASED ON SOIL HAVING AN ALLOWABLE SAFE LATERAL BEARING OF 2000 POUNDS PER SQUARE FOOT AND 200 PSI TEST PRESSURE AND A 1.5 FACTOR OF SAFETY. AREA MUST BE REVISED FOR SOILS WITH A LOWER BEARING CAPACITY OR HIGHER TEST PRESSURE.

GENERAL NOTES:

1. COVER OVER TOP OF PIPE SHALL BE A MINIMUM OF 42". IF GRADING PLANS RECEIVED BY THE ENGINEER/OWNER WITH THE REQUEST FOR WATER MAIN LAYOUT, INDICATE ADJUSTMENTS TO EXISTING GRADE, THEN PIPE SHALL BE INSTALLED TO MEET MINIMUM AND MAXIMUM COVER FROM PROPOSED GRADES SHOWN ON SAID PLANS.
2. THRUST BLOCKS SHALL BE BUILT AGAINST UNDISTURBED SOIL WITH ADEQUATE BACKING TO PREVENT MOVEMENT OF FITTING.
3. NO THRUST BLOCKS TO BE PLACED IN SEWER LATERAL DITCHES OR OTHER UTILITY TRENCHES.
4. THRUST BLOCKING MUST FIT IN EASEMENT, IN SOME CASES ADDITIONAL RESTRAINT MAY BE REQUIRED.
5. POLYETHYLENE ENCASEMENT ON ALL D.I. PIPE AND FITTINGS.
6. PIPE JOINTS AND BOLTS MUST BE ACCESSIBLE.
7. ALL BOLTS SHALL BE PTFE POLYMER COATED BOLTS (EX. XYLAN, FLUOROKOTE #1), MINIMUM 1/2" DIAMETER. COAT EXPOSED ROD WITH APPROVED MATERIAL AFTER CONCRETE HAS SET.
8. ALLOW SUFFICIENT CLEARANCE BETWEEN CONCRETE AND BOLTS FOR FUTURE MAINTENANCE.
9. THRUST BLOCKING DETAILS ARE SHOWN HERE FOR TYPICAL INSTALLATIONS. IN SOME CASES, ADDITIONAL RESTRAINT MAY BE REQUIRED.
10. PORTLAND CEMENT CONCRETE USED FOR THRUST BLOCKS SHALL BE 3000 PSI CONCRETE (MIN.).

REVISIONS

MISSOURI AMERICAN WATER STANDARD
CIVIL
THRUST BLOCK AT HORIZONTAL BENDS (LESS THAN 3 FEET IN THICKNESS)–DETAIL

MISSOURI AMERICAN WATER
ST. LOUIS, MO. 63141

MISSOURI AMERICAN WATER ENGINEERING
727 CRAIG ROAD
ST. LOUIS, MO. 63141

AMERICAN WATER

DRAWN BY KKM
PROJECT ENG'R
APPROVED
DATE 09–16–11
PROJECT IP
USE DIMENSIONS ONLY
SCALE N.T.S.

USE APPROVED DRAWINGS ONLY FOR CONSTRUCTION PURPOSES

0201–0601–SD19

0201–0601–SD19

0201–0601–SD19

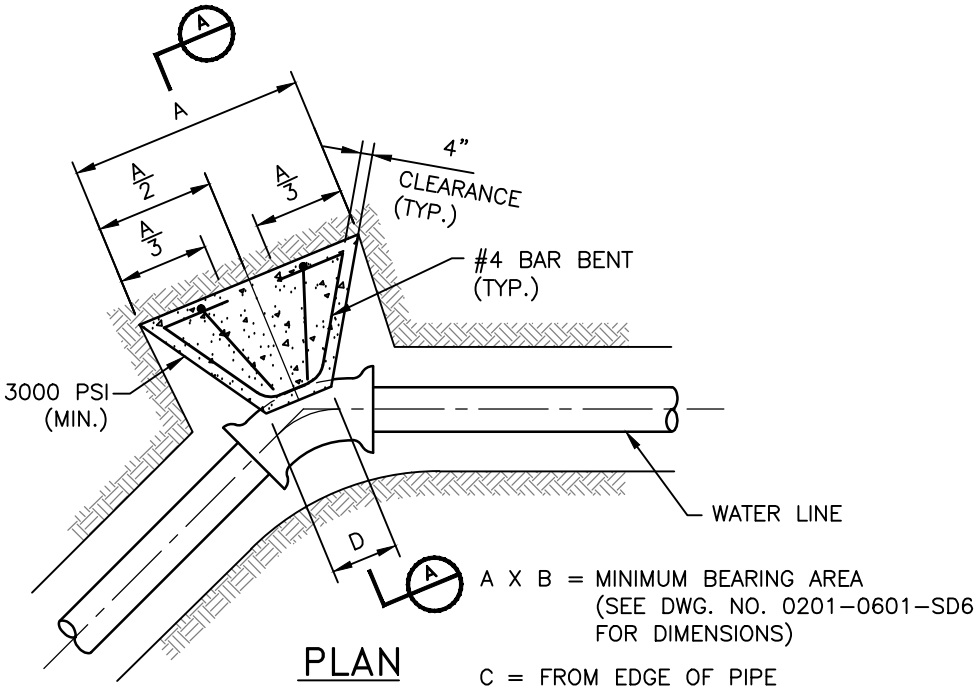

PLAN

A X B = MINIMUM BEARING AREA
(SEE DWG. NO. 0201–0601–SD6
FOR DIMENSIONS)

C = FROM EDGE OF PIPE
TO SOIL BEARING WALL

D = DIAMETER OF PIPE

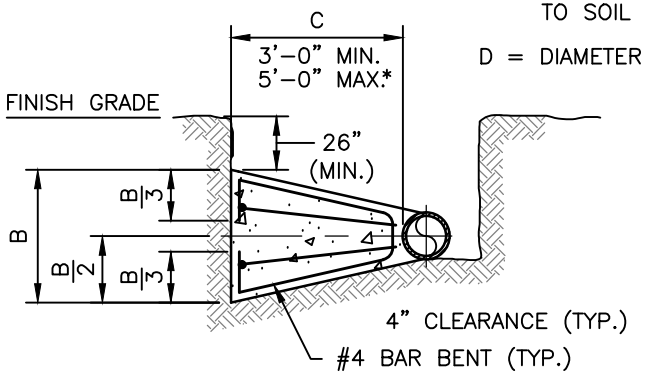

* SPECIAL DESIGN REQUIRED IF GREATER THAN 5'–0"

SECTION A–A

* BEARING AREAS ARE BASED ON SOIL HAVING AN ALLOWABLE SAFE LATERAL BEARING OF 2000 POUNDS PER SQUARE FOOT AND 200 PSI TEST PRESSURE AND A 1.5 FACTOR OF SAFETY. AREA MUST BE REVISED FOR SOILS WITH A LOWER BEARING CAPACITY OR HIGHER TEST PRESSURE.

GENERAL NOTES:

1. COVER OVER TOP OF PIPE SHALL BE 42" MINIMUM. IF GRADING PLANS RECEIVED BY THE ENGINEER/OWNER WITH THE REQUEST FOR WATER MAIN LAYOUT, INDICATE ADJUSTMENTS TO EXISTING GRADE, THEN PIPE SHALL BE INSTALLED TO MEET MINIMUM AND MAXIMUM COVER FROM PROPOSED GRADES SHOWN ON SAID PLANS.
2. THRUST BLOCKS SHALL BE BUILT AGAINST UNDISTURBED SOIL WITH ADEQUATE BACKING TO PREVENT MOVEMENT OF FITTING.
3. NO THRUST BLOCKS TO BE PLACED IN SEWER LATERAL DITCHES OR OTHER UTILITY TRENCHES.
4. THRUST BLOCKING MUST FIT IN EASEMENT, IN SOME CASES ADDITIONAL RESTRAINT MAY BE REQUIRED.
5. POLYETHYLENE ENCASEMENT ON ALL D.I. PIPE AND FITTINGS.
6. PIPE JOINTS AND BOLTS MUST BE ACCESSIBLE.
7. ALL BOLTS SHALL BE PTFE POLYMER COATED BOLTS (EX. XYLAN, FLUOROKOTE #1), MINIMUM 1/2" DIAMETER. COAT EXPOSED ROD WITH APPROVED MATERIAL AFTER CONCRETE HAS SET.
8. ALLOW SUFFICIENT CLEARANCE BETWEEN CONCRETE AND BOLTS FOR FUTURE MAINTENANCE.
9. THRUST BLOCKING DETAILS ARE SHOWN HERE FOR TYPICAL INSTALLATIONS. IN SOME CASES, ADDITIONAL RESTRAINT MAY BE REQUIRED.
10. PORTLAND CEMENT CONCRETE USED FOR THRUST BLOCKS SHALL BE 3000 PSI CONCRETE MINIMUM.

REVISIONS

MISSOURI AMERICAN WATER STANDARD
CIVIL
THRUST BLOCK AT HORIZONTAL BENDS
(EXCEEDING 3 FT. IN THICKNESS) – DETAIL

MISSOURI AMERICAN WATER
ST. LOUIS, MO. 63141

MISSOURI AMERICAN WATER ENGINEERING
727 CRAIG ROAD
ST. LOUIS, MO. 63141

AMERICAN WATER

DRAWN BY KKM
PROJECT ENG'R
APPROVED
DATE 09–16–11
PROJECT IP
USE DIMENSIONS ONLY
SCALE N.T.S.

USE APPROVED DRAWINGS ONLY
FOR CONSTRUCTION PURPOSES

0201–0601–SD20

0201–0601–SD20

0201–0601–SD20

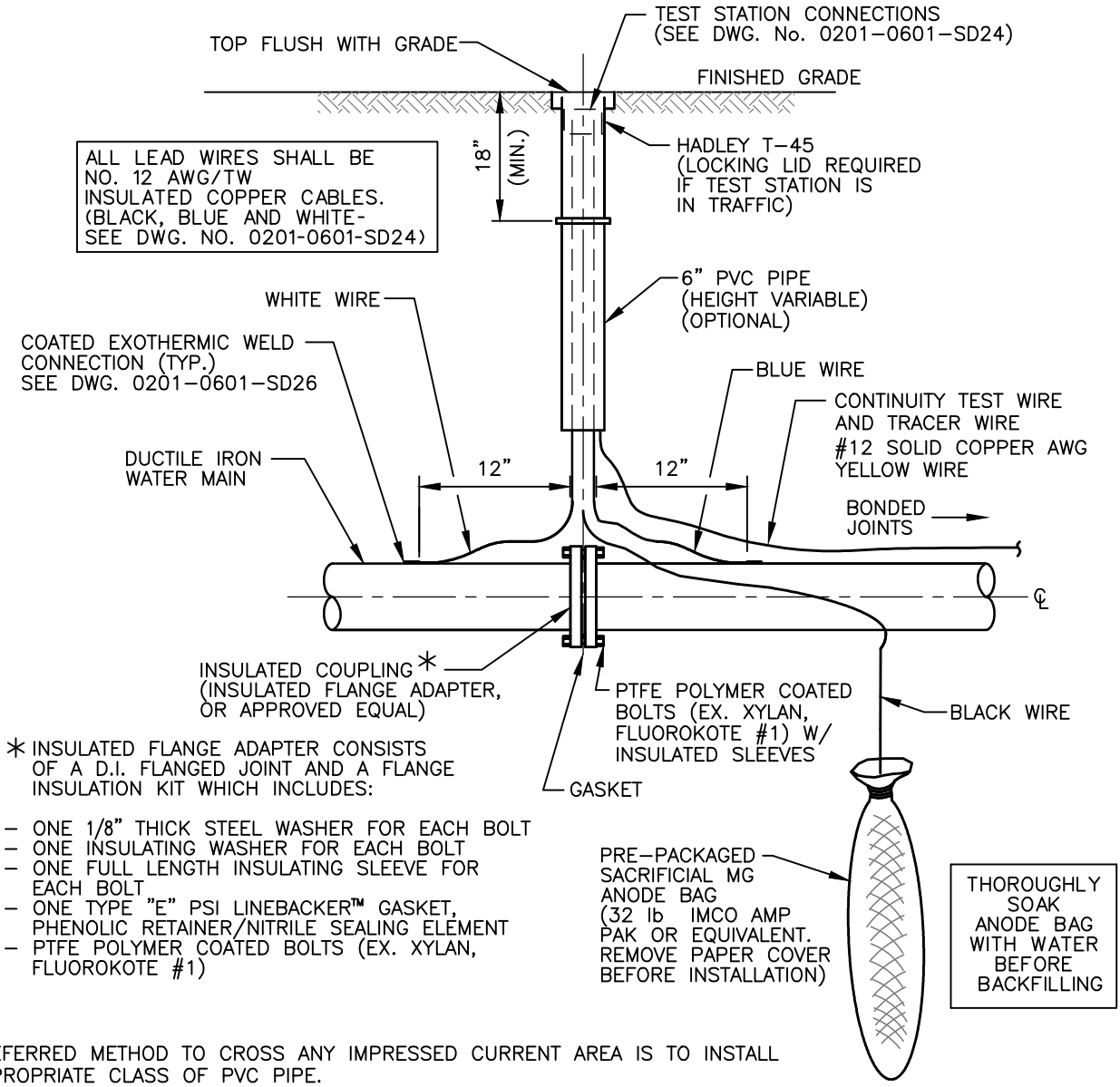

* INSULATED FLANGE ADAPTER CONSISTS OF A D.I. FLANGED JOINT AND A FLANGE INSULATION KIT WHICH INCLUDES:

- ONE 1/8" THICK STEEL WASHER FOR EACH BOLT
- ONE INSULATING WASHER FOR EACH BOLT
- ONE FULL LENGTH INSULATING SLEEVE FOR EACH BOLT
- ONE TYPE "E" PSI LINEBACKER™ GASKET, PHENOLIC RETAINER/NITRILE SEALING ELEMENT
- PTFE POLYMER COATED BOLTS (EX. XYLAN, FLUOROKOTE #1)

NOTES:

1. PREFERRED METHOD TO CROSS ANY IMPRESSED CURRENT AREA IS TO INSTALL APPROPRIATE CLASS OF PVC PIPE.
2. INSTALLATION OF CATHODIC PROTECTION SYSTEM SHALL BE DONE IN CONSULTATION WITH AGENCY OPERATING IMPRESSED CURRENT AREA.
3. DOUBLE POLYWRAP PIPE WITH BONDED JOINTS PLUS ONE PIPE LENGTH ON UNBONDED SIDE.
4. CONTRACTOR SHALL CONDUCT TESTS OF SOIL RESISTIVITY AND RESISTANCE BETWEEN WIRES WITH COMPLETION OF WIRING NOTING DATE AND TIME OF TEST, REPORTING ALL RESULTS TO ENGINEER.
5. BACKFILL ALL BONDED MAINS AND ONE FULL LENGTH OF PIPE ON UNBONDED SIDES WITH 3/4" MINUS GRAVEL FROM 6" BELOW BOTTOM OF PIPE TO 12" ABOVE TOP OF PIPE.

REVISIONS

MISSOURI AMERICAN WATER STANDARD
CIVIL
PLACEMENT OF ANODE BAG TEST STATION
AND LEAD WIRES DETAIL

MISSOURI AMERICAN WATER
ST. LOUIS, MO. 63141

MISSOURI AMERICAN WATER ENGINEERING
727 CRAIG ROAD
ST. LOUIS, MO. 63141

AMERICAN WATER

DRAWN BY KKM
PROJECT ENG'R
APPROVED
DATE 01-13-22
PROJECT
USE DIMENSIONS ONLY
SCALE N.T.S.

USE APPROVED DRAWINGS ONLY
FOR CONSTRUCTION PURPOSES

0201-0601-SD22

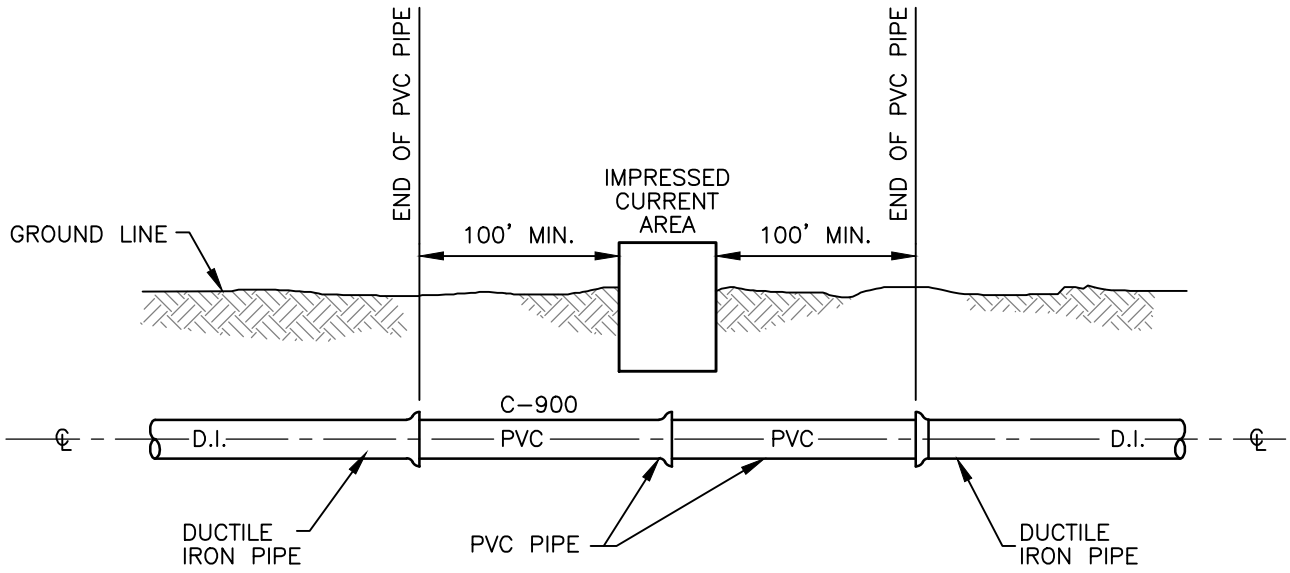

PLAN

N.T.S.

NOTES:

1. IF PIPE IS BEING CONNECTED TO (OR IS PART OF) A SYSTEM WITH FERROUS PIPE, PVC SHALL BE C-900 SDR14.
2. SEE DWG. No. 0201-0601-SD22 FOR ALL PIPE 16" AND LARGER.
3. ENGINEER MUST APPROVE ALL CATHODIC PROTECTION SYSTEMS USED.
4. FIRST CATHODIC PROTECTION CHOICE IS TO SWITCH TO C-900 SDR14 PRESSURE CLASS 200 FOR PIPE SIZES OF 12" AND SMALLER AND WORKING PRESSURE BELOW 125 PSI.
5. IMPRESSED CURRENT AREA MAY INCLUDE ELECTRIC RAIL, OR RECTIFIER FIELD INCLUDING ANODE BEDS, OR CATHODIC PROTECTION SYSTEMS.

REVISIONS	MISSOURI AMERICAN WATER STANDARD CIVIL CATHODIC PROTECTION UTILIZING PVC PIPE 12" AND SMALLER DETAIL
	MISSOURI AMERICAN WATER ST. LOUIS, MO. 63141
	MISSOURI AMERICAN WATER ENGINEERING 727 CRAIG ROAD ST. LOUIS, MO. 63141 AMERICAN WATER
	DRAWN BY KKM PROJECT ENG'R APPROVED DATE 01-31-18 PROJECT IP USE DIMENSIONS ONLY SCALE N.T.S.
	USE APPROVED DRAWINGS ONLY FOR CONSTRUCTION PURPOSES 0201-0601-SD23

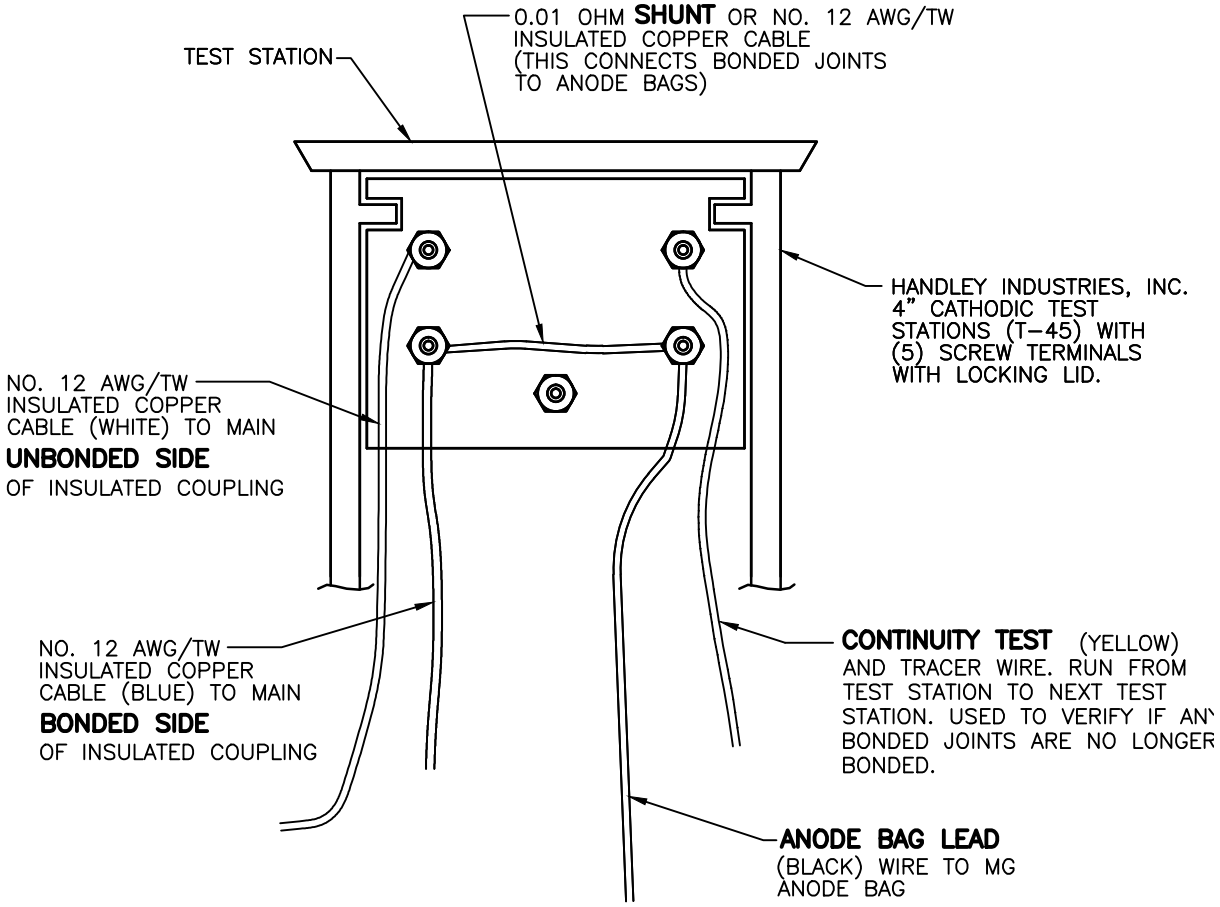

MEASURE OHM RESISTANCE AND RECORD BELOW
SUBMIT WITH AS-BUILT DRAWINGS

NOTE: THE "SHUNT" WIRE WILL NEED TO BE TEMPORARILY RELOCATED IN ONE OR BOTH TEST STATIONS TO OBTAIN SOME OF THE READINGS.

DATE: XX-XX-XX	(OHMS) RESISTANCE	(AMPS) CURRENT	(VOLTS) VOLTAGE
WHITE TO BLUE			
BLUE TO BLACK			
YELLOW TO BLUE			

REVISIONS

MISSOURI AMERICAN WATER STANDARD
CIVIL
TEST STATION CONNECTIONS
DETAIL

MISSOURI AMERICAN WATER
ST. LOUIS, MO. 63141

MISSOURI AMERICAN WATER ENGINEERING
727 CRAIG ROAD
ST. LOUIS, MO. 63141

AMERICAN WATER

DRAWN BY KKM
PROJECT ENG'R
APPROVED
DATE 02-27-09
PROJECT IP
USE DIMENSIONS ONLY
SCALE N.T.S.

USE APPROVED DRAWINGS ONLY FOR CONSTRUCTION PURPOSES

0201-0601-SD24

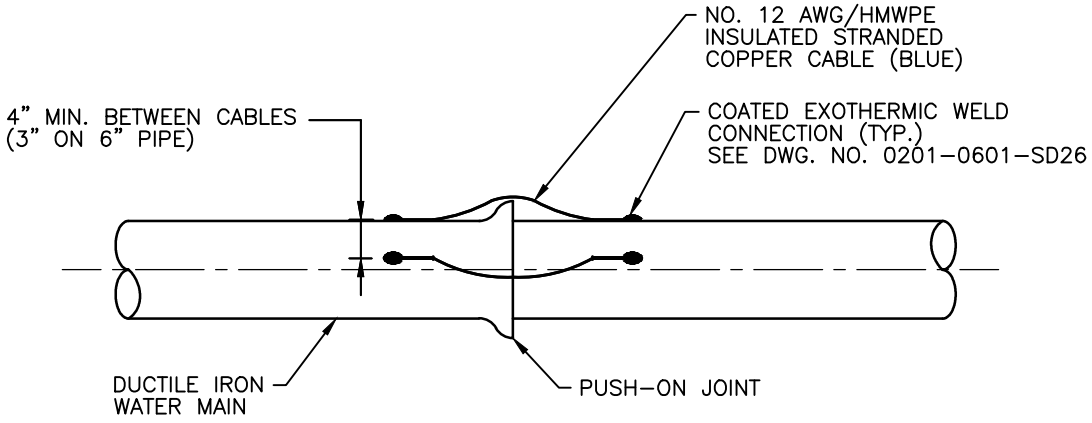

NOTES:

1. MINIMUM 2 CONNECTIONS BETWEEN PIPES AS SHOWN.
2. COAT ALL EXOTHERMIC WELDS WITH THE SAME APPROVED COATING MATERIAL AS FOR BOLTS. SEE DWG. No. 0201-0601-SD26, PROCEDURE 5.

REVISIONS	MISSOURI AMERICAN WATER STANDARD CIVIL CONTINUITY BONDS FOR PUSH-ON DUCTILE IRON PIPE DETAIL
	MISSOURI AMERICAN WATER ST. LOUIS, MO. 63141
	MISSOURI AMERICAN WATER ENGINEERING 727 CRAIG ROAD ST. LOUIS, MO. 63141 AMERICAN WATER DRAWN BY KKM PROJECT ENG'R APPROVED DATE 11-13-08 PROJECT IP USE DIMENSIONS ONLY SCALE N.T.S.
	USE APPROVED DRAWINGS ONLY FOR CONSTRUCTION PURPOSES 0201-0601-SD25

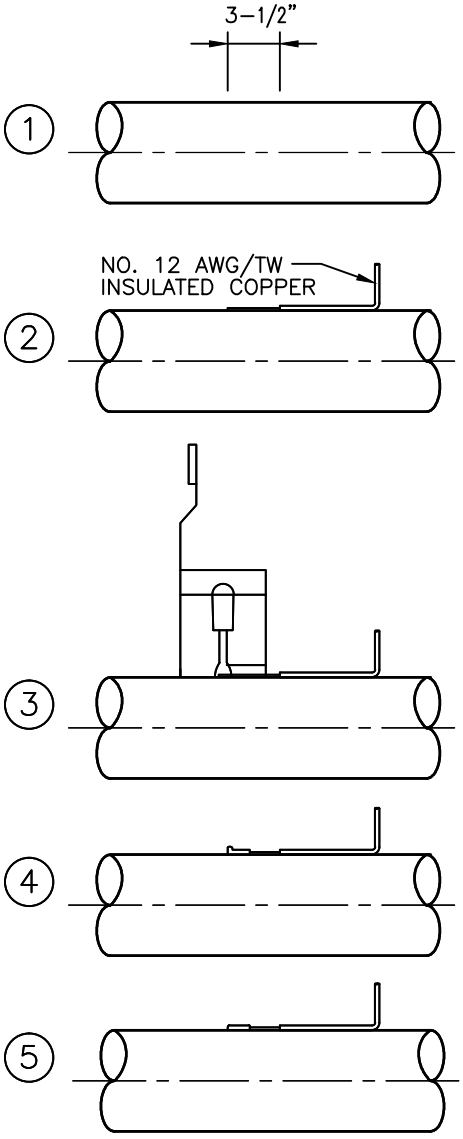

1. REMOVE COATING, FILE SURFACE TO BRIGHT METAL AND DRY.

2. STRIP INSULATION FROM WIRE, CRIMP ON COPPER SLEEVE (AS REQ'D.), PLACE WIRE AGAINST METAL SURFACE.

3. PLACE PREPARED WELDER OVER WIRE AND HOLD FIRM WHILE MAKING CONNECTION. APPLY SPARK TO SIDE OF WELDER.

4. AFTER WELD COOLS REMOVE SLAG WITH HAMMER.

5. COAT CONNECTION WITH 3M RUBBERIZED AEROSOL UNDERCOATIING PART# 051135/08883 OR EQUIVALENT.

REVISIONS

MISSOURI AMERICAN WATER STANDARD CIVIL EXOTHERMIC WELD CONNECTION DETAIL

MISSOURI AMERICAN WATER
ST. LOUIS, MO. 63141

MISSOURI AMERICAN WATER ENGINEERING
727 CRAIG ROAD
ST. LOUIS, MO. 63141

AMERICAN WATER

DRAWN BY KKM
PROJECT ENG'R
APPROVED
DATE 11-13-08
PROJECT IP
USE DIMENSIONS ONLY
SCALE N.T.S.

USE APPROVED DRAWINGS ONLY FOR CONSTRUCTION PURPOSES

0201-0601-SD26

0201-0601-SD26

MAXIMUM JOINT DEFLECTION
FULL–LENGTH PIPE–PUSH–ON TYPE JOINT PIPE

MAXIMUM JOINT DEFLECTION DUCTILE IRON PUSH ON PIPE						
NOMINAL PIPE SIZE	DEFLECTION ANGLE	MAX OFFSET -S		APPROX RADIUS OF CURVE - R PRODUCED BY SUCCESSION OF		CURRENT AW DEFLECTION ANGLE
INCHES	DEGREES	INCHES		INCHES		DEGREES
		L=18 FT	L=20 FT	L=18 FT	L=20 FT	
3	4	15	17	256	285	
4	4	15	17	256	285	
6	4	15	17	256	285	4
8	4	15	17	256	285	4
10	4	15	17	256	285	
12	4	15	17	256	285	4
14	4	9	10	256	285	
16	2.5	9	10	429	476	2.5
18	2.5	9	10	429	476	
20	2.5	9	10	429	476	2
24	2.5	9	10	429	476	1.5

MAXIMUM JOINT DEFLECTION DUCTILE IRON MJ PIPE						
NOMINAL PIPE SIZE	DEFLECTION ANGLE	MAX OFFSET -S		APPROX RADIUS OF CURVE - R PRODUCED BY SUCCESSION OF		CURRENT AW DEFLECTION ANGLE
INCHES	DEGREES	INCHES		INCHES		DEGREES
		L=18 FT	L=20 FT	L=18 FT	L=20 FT	table deleted
3	6.5	25	28	158	176	
4	6.5	25	28	158	176	
6	5.5	22	24	182	202	
8	4	16	18	256	285	
10	4	16	18	256	285	
12	4	16	18	256	285	
14	3	11	12	367	408	
16	3	11	12	367	408	
18	2.5	11	10	429	476	
20	2.5	9	10	429	476	
24	1.5	9	8	644	715	

NOTES:

1. PIPE JOINT DEFLECTION ALLOWED ON DUCTILE IRON PIPE ONLY. PIPE JOINT DEFLECTION AND BENDING NOT ALLOWED ON PVC PIPE.
2. FOR OTHER PIPE TYPES SUBMIT MANUFACTURER'S TABLE.

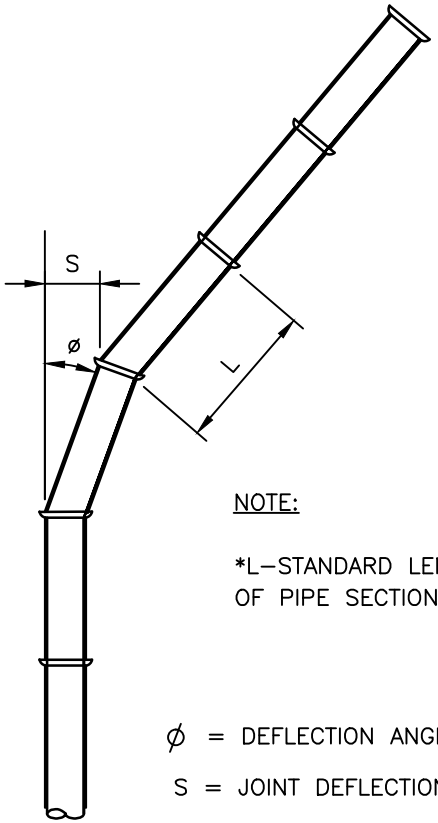

NOTE:

*L–STANDARD LENGTH OF PIPE SECTION.

ϕ = DEFLECTION ANGLE

S = JOINT DEFLECTION OFFSET

L = LAYING LENGTH

R = RADIUS OF CURVE

$$R = \frac{L}{2 \tan \frac{\phi}{2}}$$

0201–0601–SD32

REVISIONS

MISSOURI AMERICAN WATER STANDARD
CIVIL
PIPE CURVE GEOMETRY
DETAIL

MISSOURI AMERICAN WATER
ST. LOUIS, MO. 63141

MISSOURI AMERICAN WATER ENGINEERING
727 CRAIG ROAD
ST. LOUIS, MO. 63141

AMERICAN WATER

DRAWN BY KKM
PROJECT ENG'R
APPROVED
DATE 11–13–08
PROJECT IP
USE DIMENSIONS ONLY
SCALE N.T.S.

USE APPROVED DRAWINGS ONLY FOR CONSTRUCTION PURPOSES

0201–0601–SD32

0201–0601–SD32

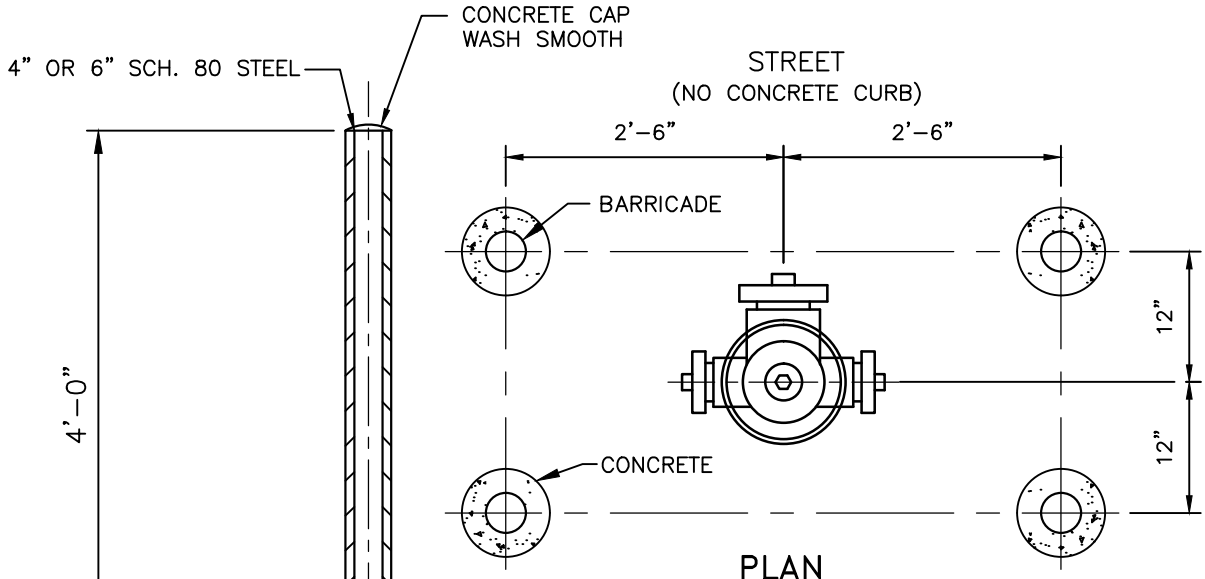

PLAN

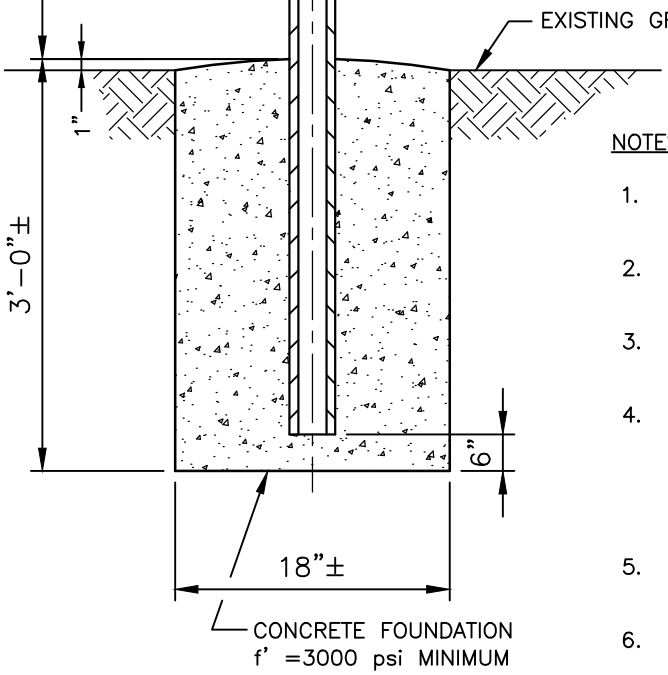

SECTION

NOTES:

1. SEE PLANS FOR NUMBER OF BARRICADES TO BE USED.
2. THE EXACT LOCATION OF BARRICADES MAY BE CHANGED BY THE ENGINEER.
3. THE STEEL PIPE ABOVE GROUND SHALL BE PAINTED WITH PRIMER COAT.
4. PAINT TWO FINISH COATS OF TNEMEC SERIES 1 SHALL BE USED ON PIPE BOLLARDS. FIRST COAT TNEMEC SERIES 1, SECOND COAT TNEMEC URETHANE 1074U COLOR "SCHOOL BUS YELLOW", TOTAL PAINT DFT TO BE 10 MIL.
5. DO NOT LOCATE BOLLARD DIRECTLY ABOVE MAIN OR HYDRANT LATERAL.
6. BOLLARDS SHALL BE ORIENTED SO AS TO AVOID DISRUPTING HYDRANT OPERATION.
7. ASPHALTIC COATED DIP SHALL NOT BE USED AS AN ALTERNATIVE MATERIAL.

REVISIONS

MISSOURI AMERICAN WATER STANDARD
CIVIL
FIRE HYDRANT PROTECTION
PIPE BOLLARD DETAIL

MISSOURI AMERICAN WATER
ST. LOUIS, MO. 63141

MISSOURI AMERICAN WATER ENGINEERING
727 CRAIG ROAD
ST. LOUIS, MO. 63141

AMERICAN WATER

DRAWN BY KKM
PROJECT ENG'R
APPROVED
DATE 11-13-08
PROJECT IP
USE DIMENSIONS ONLY
SCALE N.T.S.

USE APPROVED DRAWINGS ONLY FOR CONSTRUCTION PURPOSES

0201-0601-SD34

0201-0601-SD34

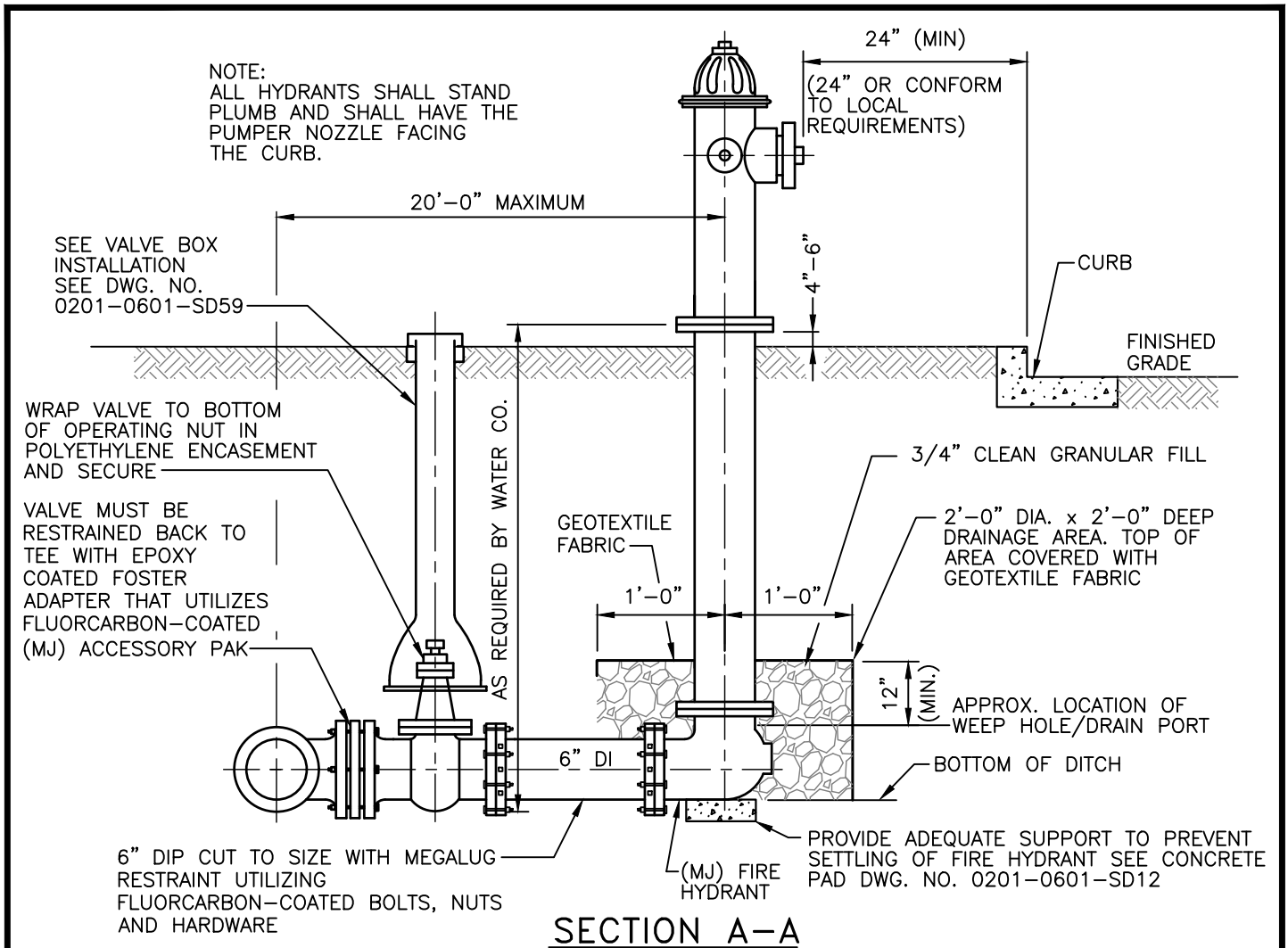

SECTION A-A

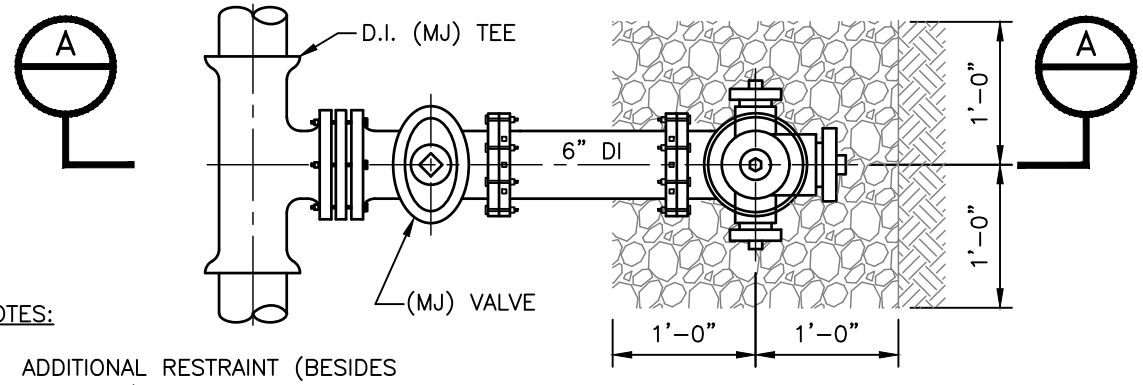

PLAN

NOTES:

1. ADDITIONAL RESTRAINT (BESIDES BLOCKING) ONLY AS REQUIRED BY ENGINEER.
2. PAINT HYDRANT TO MATCH COLOR OF LOCAL REQUIREMENTS USING PAINT COMPATIBLE WITH MANUFACTURER'S CATALOG TO BURY LINE (AND CAN BE DONE PRIOR TO INSTALLATION).
3. APPLY TOUCH UP PAINT AS REQUIRED AFTER INSTALLATION.

REVISIONS

24"(MIN) from curb 03-07-17 KMS

Title "Optional" removed 11-07-17 KMS

MISSOURI AMERICAN WATER STANDARD CIVIL FIRE HYDRANT DETAIL

MISSOURI AMERICAN WATER
ST. LOUIS, MO. 63141

MISSOURI AMERICAN WATER ENGINEERING
727 CRAIG ROAD
ST. LOUIS, MO. 63141

AMERICAN WATER

DRAWN BY KKM
PROJECT ENG'R
APPROVED
DATE 02-27-09
PROJECT IP
USE DIMENSIONS ONLY
SCALE N.T.S.

USE APPROVED DRAWINGS ONLY FOR CONSTRUCTION PURPOSES

0201-0601-SD35

0201-0601-SD35

Y:\Departmental Folders\Engineering\Engineering Standards\Technical Standards\OLD Pipeline Specifications\2009 MAWC Pipeline Specifications & Drawings\Additional 2009 Specs\2009 Pipeline Drawings

NOTES:

1. THIS STANDARD APPLICABLE FOR 4" DIA. AND LARGER PIPE.
2. SEE SPECIFICATION SECTION 2220 FOR ADDITIONAL INFORMATION.

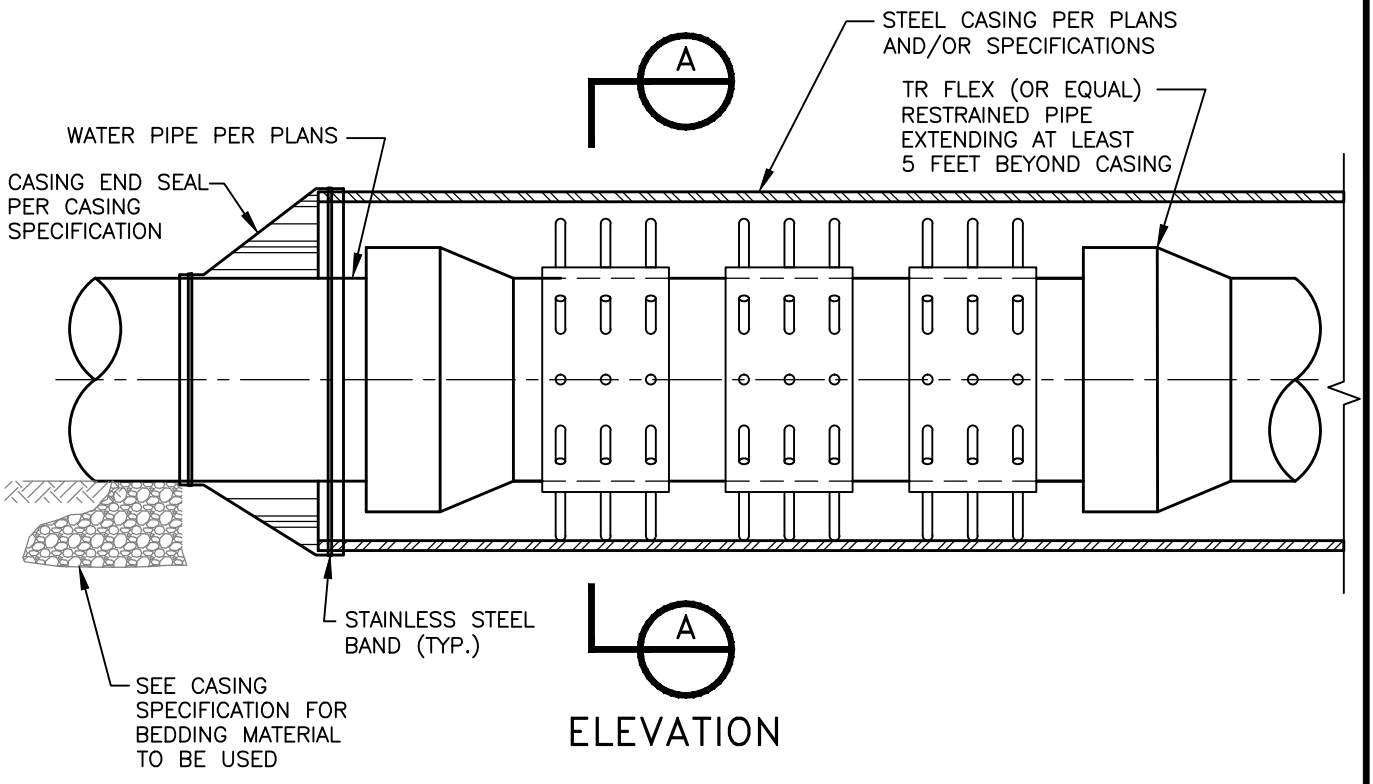

ELEVATION

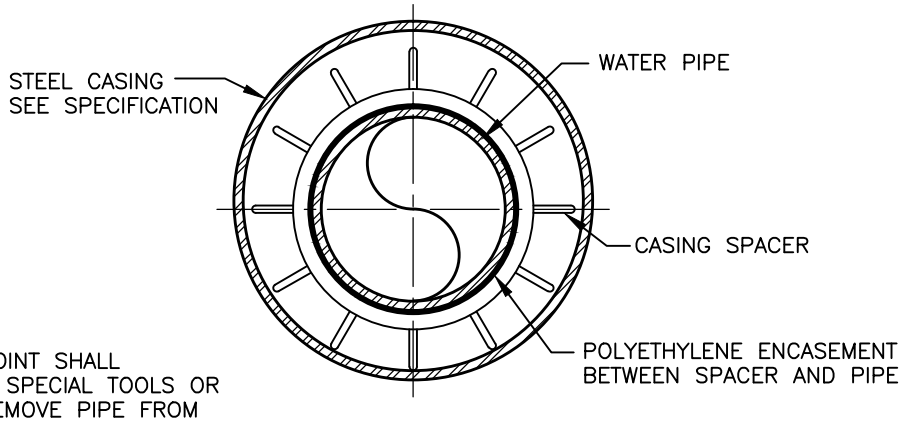

SECTION A–A

NOTES:

1. RESTRAINT JOINT SHALL REQUIRE NO SPECIAL TOOLS OR SHIMS TO REMOVE PIPE FROM CASING IN THE FUTURE (NO FIELD LOK GASKETS ALLOWED).
2. STEEL CASING SHALL BE 6" LARGER THAN PIPE BELL O.D.

REVISIONS	MISSOURI AMERICAN WATER STANDARD CIVIL CASING INSTALLATION DETAIL
	MISSOURI AMERICAN WATER ST. LOUIS, MO. 63141
	MISSOURI AMERICAN WATER ENGINEERING 727 CRAIG ROAD ST. LOUIS, MO. 63141
	DRAWN BY KKM PROJECT ENG'R APPROVED DATE 11-13-08 PROJECT IP USE DIMENSIONS ONLY SCALE N.T.S.
	USE APPROVED DRAWINGS ONLY FOR CONSTRUCTION PURPOSES 0201-0601-SD45

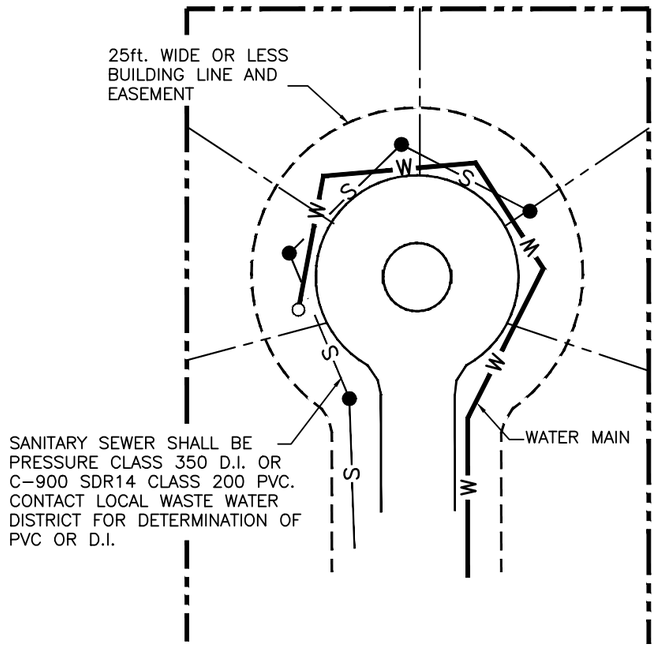

LAYOUT "A" BUILDING SETBACK 25ft. OR LESS
CSR 20-8 (SPECIAL CONDITIONS)

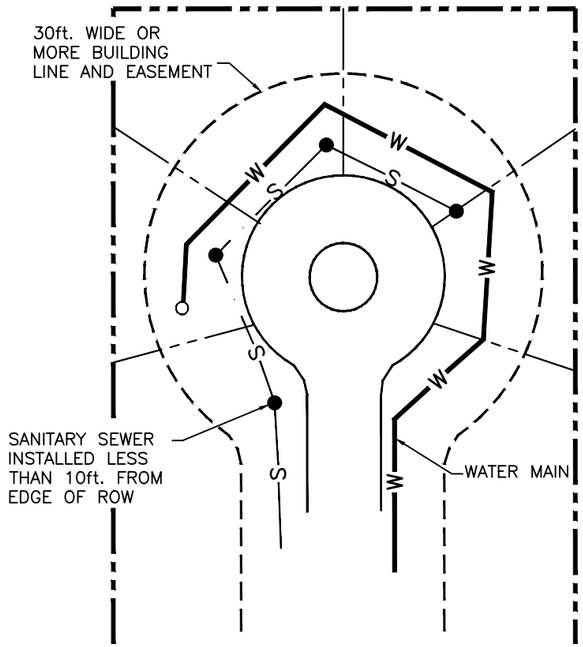

LAYOUT "B" BUILDING SETBACK 30ft. OR MORE
CSR 20-8 (TEN FOOT SEPARATION)

NOTES:

CUL-DE-SACS THAT ARE DESIGNED WITH THE SANITARY SEWER INSTALLED OR PROPOSED AROUND THE PERIMETER OF A CUL-DE-SAC IN AN EASEMENT MUST MEET THE DNR CODE OF STATE REGULATIONS (CSR) AS OUTLINED BELOW. DUE TO THE WIDTH OF SEWER TRENCHES AND THE RESULTING DISTURBED SOIL OCCUPYING THE ENTIRE EASEMENT.

REGULATIONS NORMALLY REQUIRES 10 FEET SEPARATION BETWEEN THE WATER MAIN AND THE BUILDING LINE WHERE A WATER MAIN IS INSTALLED OR PROPOSED AROUND THE PERIMETER OF A CUL-DE-SAC.

CUL-DE-SACS WITH 30 FOOT WIDE EASEMENT AND BUILDING LINE SHOULD NOT BE AN ISSUE AS LONG AS THE SEWER IS INSTALLED LESS THAN 10 FEET FROM THE EDGE OF RIGHT OF WAY.

HORIZONTAL SEPARATION – SEWER MAINS SHALL BE AT LEAST 10 FEET HORIZONTALLY FROM ANY EXISTING OR PROPOSED WATER MAIN. THE DISTANCES SHALL BE MEASURED EDGE-TO-EDGE. IN CASES WHERE IT IS NOT PRACTICAL TO MAINTAIN TEN FOOT (10') – SEPARATION. DEVIATION ON A CASE BY CASE BASIS, IF SUPPORTED BY DATA FROM THE DESIGN ENGINEER. THIS DEVIATION MAY ALLOW INSTALLATION OF THE SEWER CLOSER TO THE WATER MAIN, PROVIDED THAT THE WATER MAIN IS IN A SEPARATE TRENCH OR AN UNDISTURBED EARTH SHELF LOCATED ON ONE (1) SIDE OF THE SEWER AT AN ELEVATION THAT THE BOTTOM OF THE WATER MAIN IS AT LEAST EIGHTEEN INCHES (18") ABOVE THE TOP OF THE SEWER. CONSTRUCTOR SHALL NOT PROCEED WITH DEVIATION WITHOUT AW APPROVAL.

CROSSING – SEWERS CROSSING WATER MAINS SHALL BE LAID TO PROVIDE A MINIMUM VERTICAL DISTANCE OF EIGHTEEN INCHES (18") BETWEEN THE OUTSIDE OF THE WATER MAIN AND THE OUTSIDE OF THE SEWER. THIS SHALL BE THE CASE WHERE THE WATER MAIN IS EITHER ABOVE OR BELOW THE SEWER. THE CROSSING SHALL BE ARRANGED SO THE SEWER JOINT WILL BE EQUIVALENT AND AS FAR AS POSSIBLE FROM THE WATER MAIN JOINTS. WHEN A WATER MAIN CROSSES UNDER A SEWER, ADEQUATE STRUCTURAL SUPPORT SHALL BE PROVIDED FOR THE SEWER TO PREVENT DAMAGE TO THE WATER MAIN.

SPECIAL CONDITIONS. WHEN IT IS IMPOSSIBLE TO OBTAIN PROPER HORIZONTAL AND VERTICAL SEPARATION AS STIPULATED PREVIOUSLY. THE SEWER SHALL BE DESIGNED AND CONSTRUCTED EQUAL TO THE WATER PIPE AND SHALL BE PRESSURE TESTED TO ASSURE WATER-TIGHTNESS PRIOR TO BACKFILLING.

AN AWC DESIGNATED INSPECTOR SHALL VERIFY AND DOCUMENT THE TYPE AND PRESSURE OF SEWER MATERIAL INSTALLED, SHALL VERIFY PRESSURE TESTING FOR WATER-TIGHTNESS, AND SHALL PROVIDE AS-BUILT DRAWINGS OF THE SEWER MAIN SHOWING THE LOCATION OF THE SEWER JOINTS AND MANHOLES. SEWER DOCUMENTATION AND AS-BUILT DRAWINGS FOR LAYOUT "A" SHALL BE SENT TO AWC NEW BUSINESS DEPARTMENT PRIOR TO WATER MAIN CONSTRUCTION.

RESTRAINED JOINT DUCTILE IRON PIPE MAY BE REQUIRED ON MAIN INSTALLATIONS AROUND CUL-DE-SAC OR EYEBROW AREAS AS REQUIRED BY ENGINEER.

REVISIONS

MISSOURI AMERICAN WATER STANDARD
CIVIL
PROTECTION OF WATER SUPPLIES
IN CUL-DE-SACS DETAILS

MISSOURI AMERICAN WATER
ST. LOUIS, MO. 63141

MISSOURI AMERICAN WATER ENGINEERING
727 CRAIG ROAD
ST. LOUIS, MO. 63141

AMERICAN WATER

DRAWN BY KKM
PROJECT ENG'R
APPROVED

DATE 09-16-11
PROJECT IP

USE DIMENSIONS ONLY
SCALE N.T.S.

USE APPROVED DRAWINGS ONLY
FOR CONSTRUCTION PURPOSES

0201-0601-SD46

0201-0601-SD46

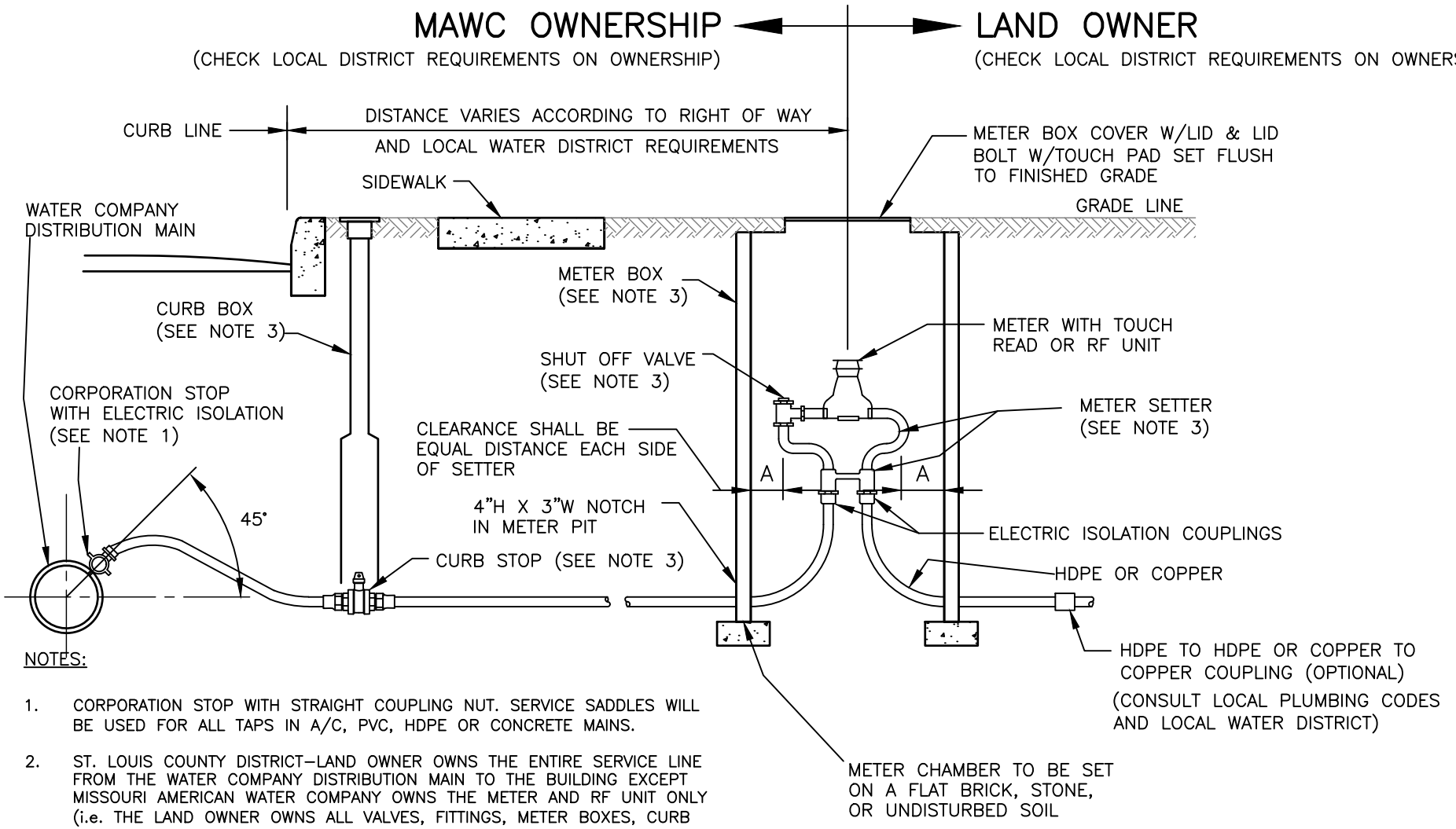

NOTES:

1. CORPORATION STOP WITH STRAIGHT COUPLING NUT. SERVICE SADDLES WILL BE USED FOR ALL TAPS IN A/C, PVC, HDPE OR CONCRETE MAINS.
2. ST. LOUIS COUNTY DISTRICT–LAND OWNER OWNS THE ENTIRE SERVICE LINE FROM THE WATER COMPANY DISTRIBUTION MAIN TO THE BUILDING EXCEPT MISSOURI AMERICAN WATER COMPANY OWNS THE METER AND RF UNIT ONLY (i.e. THE LAND OWNER OWNS ALL VALVES, FITTINGS, METER BOXES, CURB BOXES, VAULTS, SERVICE LINE, ETC.).
3. THE TYPE, SIZE, AND MANUFACTURE OF METER BOX, CURB BOX, VALVES, CURB STOP, METER SETTER AND FITTINGS SHALL MEET LOCAL WATER DISTRICT REQUIREMENTS. THE LOCATION TO BE DETERMINED BY LOCAL AUTHORITY AND/OR THE LOCAL WATER DISTRICT.
4. SERVICE LINE AND METER BOX OWNERSHIP VARIES BY LOCAL TARIFF.
5. POLYWRAP SERVICE FROM MAIN TO 3 FEET AWAY FROM MAIN.
6. CONNECTIONS BETWEEN PIPE LENGTHS SHALL BE COMPRESSION OR FLARE AND MAY DEPEND ON LOCAL PLUMBING REQUIREMENT.

REVISIONS

MISSOURI AMERICAN WATER STANDARD
CIVIL
3/4" – 1" WATER SERVICE LINE
INSTALLATION – LAYOUT

MISSOURI AMERICAN WATER
ST. LOUIS, MO. 63141

MISSOURI AMERICAN WATER ENGINEERING
727 CRAIG ROAD
ST. LOUIS, MO. 63141

AMERICAN WATER

DRAWN BY KMS
PROJECT ENG'R
APPROVED
DATE 3-12-2018
PROJECT n/a
USE DIMENSIONS ONLY
SCALE N.T.S.

USE APPROVED DRAWINGS ONLY
FOR CONSTRUCTION PURPOSES

0201-0601-SD47

0201-0601-SD47

0201-0601-SD47

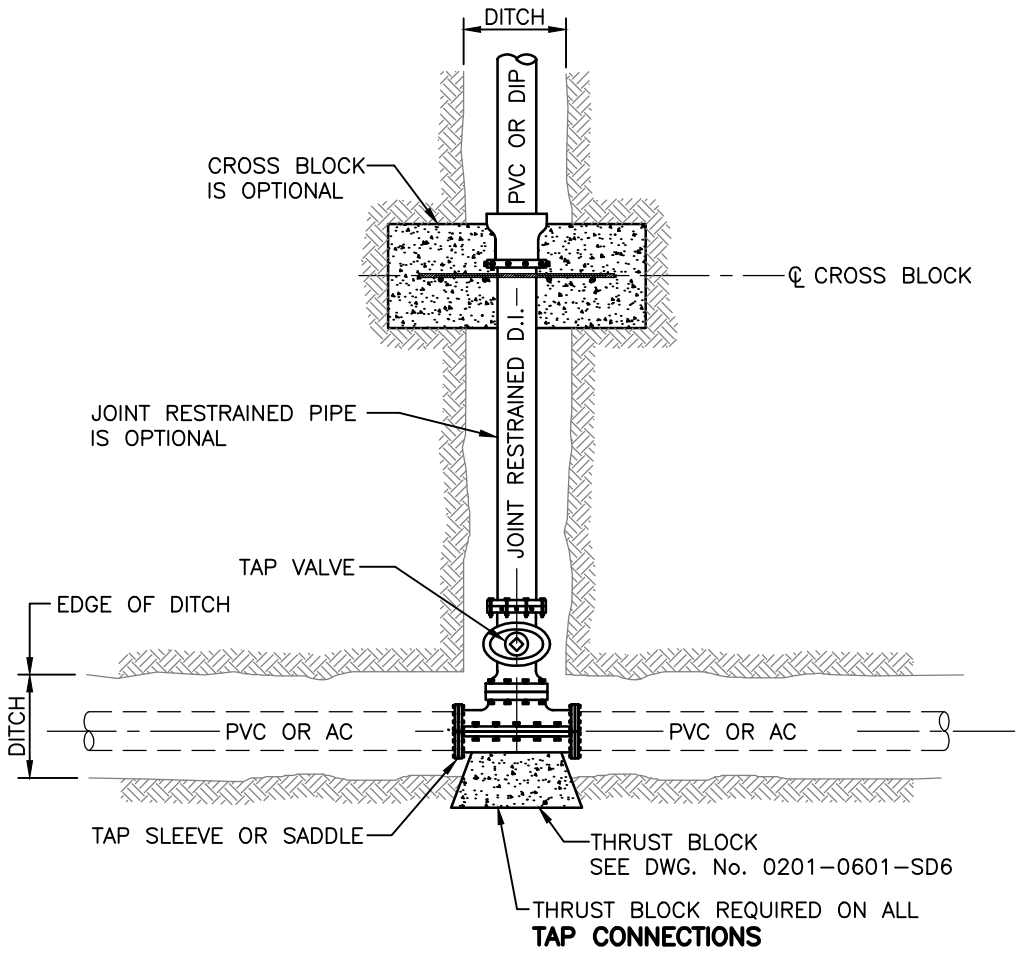

NOTES:

1. ALL TAP CONNECTIONS MADE ON PVC OR AC PIPE REQUIRE THRUST BLOCKING ON THE TAP SLEEVE/SADDLE PRIOR TO INSTALLING PIPE OUT OF THE TAP VALVE EVEN IF JOINT RESTRAINED PIPE AND/OR CROSS BLOCK IS INSTALLED.

2. SEE DWG. NO. 0201-0601-SD52 FOR PATENT TAP CONNECTION DETAILS.

REVISIONS	MISSOURI AMERICAN WATER STANDARD CIVIL PVC/AC TAP CONNECTION DETAIL
	MISSOURI AMERICAN WATER ST. LOUIS, MO. 63141
	MISSOURI AMERICAN WATER ENGINEERING 727 CRAIG ROAD ST. LOUIS, MO. 63141
	DRAWN BY KKM PROJECT ENG'R APPROVED DATE 01-13-12 PROJECT IP USE DIMENSIONS ONLY SCALE N.T.S.
	USE APPROVED DRAWINGS ONLY FOR CONSTRUCTION PURPOSES 0201-0601-SD49

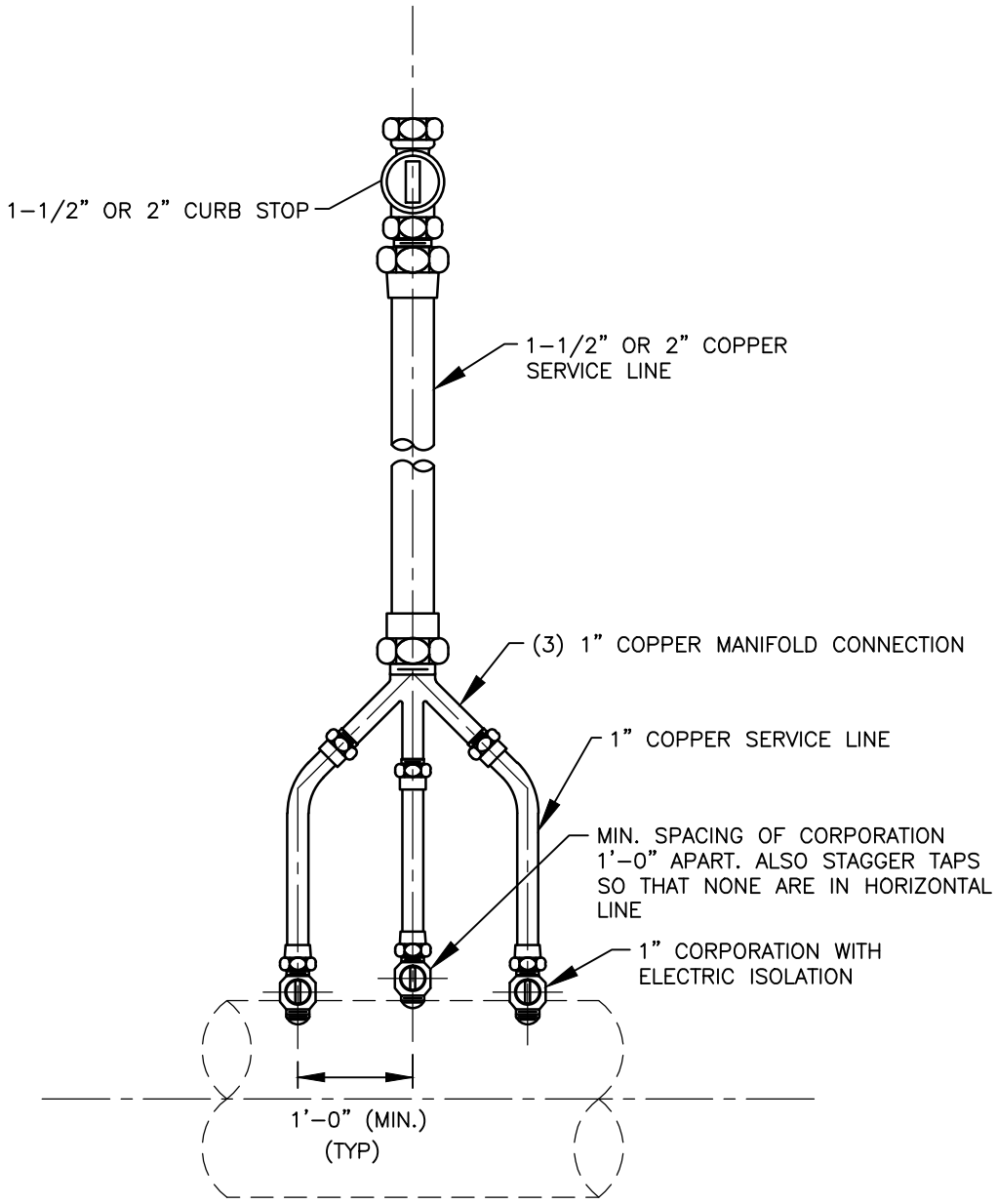

NOTES:

1. 2" SADDLE MAY BE USED WHEN APPROVED BY THE ENGINEER.
2. ALL COPPER SERVICE LINES TO BE POLYETHYLENE ENCASED FROM THE MAIN TO 3 FEET AWAY FROM THE MAIN.

REVISIONS	MISSOURI AMERICAN WATER STANDARD CIVIL 1–1/2" AND 2" SERVICE LINES DETAIL
	MISSOURI AMERICAN WATER ST. LOUIS, MO. 63141
	MISSOURI AMERICAN WATER ENGINEERING 727 CRAIG ROAD ST. LOUIS, MO. 63141 AMERICAN WATER DRAWN BY KKM PROJECT ENG'R APPROVED DATE 11–13–08 PROJECT IP USE DIMENSIONS ONLY SCALE N.T.S.
	USE APPROVED DRAWINGS ONLY FOR CONSTRUCTION PURPOSES 0201–0601–SD50

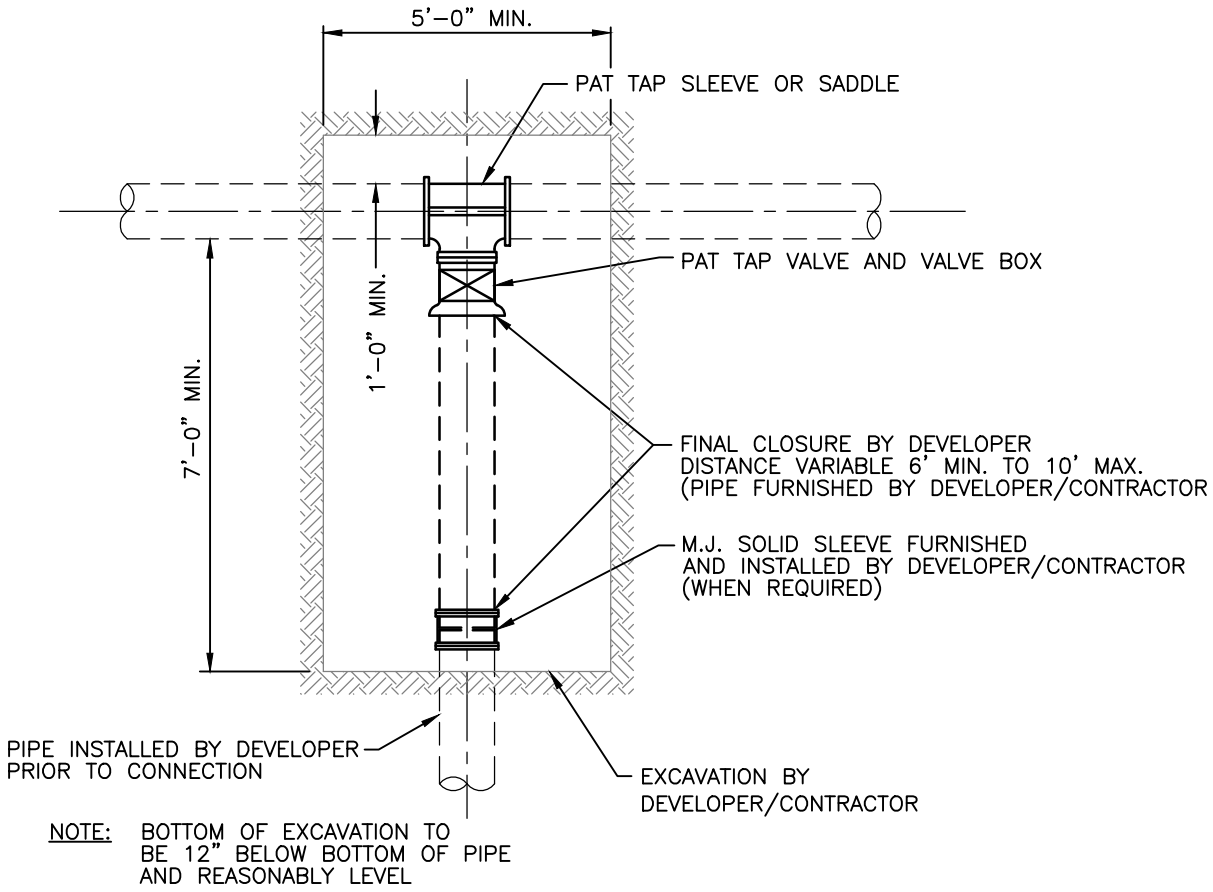

NOTE: BOTTOM OF EXCAVATION TO BE 12" BELOW BOTTOM OF PIPE AND REASONABLY LEVEL

NOTES:

1. TAP CONNECTIONS TO AC (TRANSITE PIPE) 4" AND LARGER REQUIRE AN EXCAVATION 5 FT. IN WIDTH. (MAIN SIZE IS VARIABLE).
2. ALL EXCAVATIONS SHALL COMPLY WITH ALL FEDERAL, STATE, AND LOCAL REGULATIONS FOR PROTECTION OF WORKERS.
3. IF PIPE BELL IS EXPOSED IN TAP HOLE OR OTHER OBSTACLES ENCOUNTERED, CONTACT LOCAL WATER COMPANY DISTRICT PERSONNEL FOR FIELD REVIEW BEFORE COMPLETING EXCAVATION.
4. TAP HOLE SHOULD BE FREE OF WATER AND MUD TO ALLOW SAFE HANDLING OF HEAVY SLEEVES AND TAPPING MACHINE.
5. BLOCKING BEHIND TAP TO BE PER REQUIREMENTS ON DWG. NO. 0201–0601–SD6.

REVISIONS	MISSOURI AMERICAN WATER STANDARD CIVIL PATENT TAP EXCAVATION REQUIREMENTS DETAIL
	MISSOURI AMERICAN WATER ST. LOUIS, MO. 63141
	MISSOURI AMERICAN WATER ENGINEERING 727 CRAIG ROAD ST. LOUIS, MO. 63141
	DRAWN BY KKM PROJECT ENG'R APPROVED DATE 11–13–08 PROJECT IP USE DIMENSIONS ONLY SCALE N.T.S.
	USE APPROVED DRAWINGS ONLY FOR CONSTRUCTION PURPOSES 0201–0601–SD52

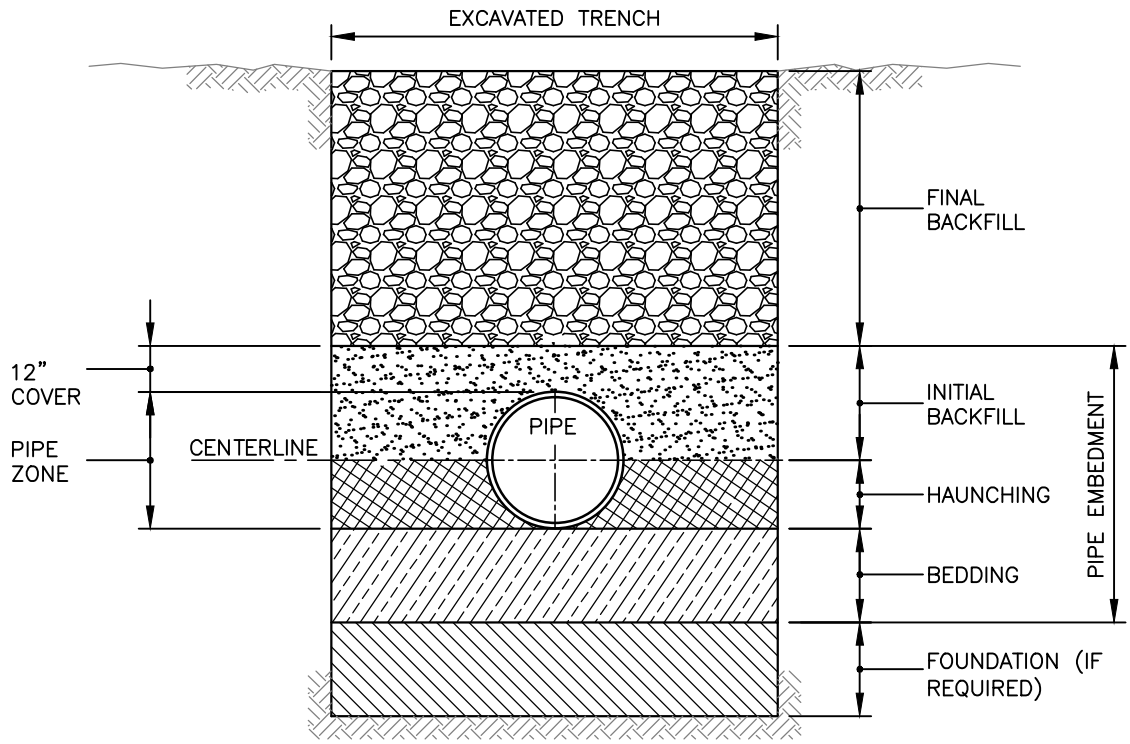

TRENCH TERMINOLOGY

FOUNDATION: A FOUNDATION IS NECESSARY ONLY WHEN NATIVE SOILS ARE UNSTABLE. FOR SUCH CONDITIONS, THE TRENCH IS OVER–EXCAVATED AND A LAYER OF SUPPORTIVE MATERIAL IS PLACED AND COMPACTED TO PROVIDE A FIRM FOUNDATION FOR THE SUBSEQUENT PIPE EMBEDMENT MATERIALS. MUST BE APPROVED BY THE ENGINEER PRIOR TO OVER–DIG.

EMBEDMENT: THIS ZONE IS THE MOST IMPORTANT IN TERMS OF PIPE PERFORMANCE. IT IS DIVIDED INTO THE FOLLOWING SUB ZONES:

- BEDDING: TYPICALLY SIX INCHES OF SUPPORTIVE, COMPACTED MATERIAL. THIS ZONE PROVIDES EVEN SUPPORT FOR THE PIPE AND BRINGS IT TO GRADE.
- HAUNCHING: EXTENDS FROM THE BOTTOM OF THE PIPE TO THE CENTERLINE OF THE PIPE. IT PROVIDES THE MOST RESISTANCE TO PIPE DEFLECTION. SPECIFYING PROPER MATERIALS AND COMPACTION ARE MOST IMPORTANT FOR THIS ZONE.
- INITIAL BACKFILL: EXTENDS FROM THE SPRINGLINE TO A POINT ABOVE THE TOP OF THE PIPE. THIS ZONE PROVIDES SOME PIPE SUPPORT AND HELPS TO PREVENT DAMAGE TO THE PIPE DURING PLACEMENT OF THE FINAL BACKFILL. THE COVER EXTENDS FROM THE TOP OF THE PIPE TO THE TOP OF THE INITIAL BACKFILL. THE DEPTH OF COVER SHOULD BE AS MUCH AS NECESSARY TO PROTECT THE PIPE DURING PLACEMENT OF THE FINAL BACKFILL. TWELVE INCHES IS A COMMON DEPTH OF COVER.

FINAL BACKFILL: THIS ZONE EXTENDS FROM THE TOP OF THE INITIAL BACKFILL TO THE TOP OF THE TRENCH. THIS ZONE HAS LITTLE INFLUENCE ON PIPE PERFORMANCE, BUT CAN BE IMPORTANT TO THE INTEGRITY OF ROADS AND STRUCTURES.
SEE SPECIFICATION SECTION 2210 FOR DESCRIPTION OF BACKFILL AND BEDDING MATERIAL.

REVISIONS

MISSOURI AMERICAN WATER STANDARD
CIVIL
PIPE TRENCH TERMINOLOGY
DETAIL

MISSOURI AMERICAN WATER
ST. LOUIS, MO. 63141

MISSOURI AMERICAN WATER ENGINEERING
727 CRAIG ROAD
ST. LOUIS, MO. 63141

AMERICAN WATER

DRAWN BY KKM
PROJECT ENG'R
APPROVED
DATE 11-13-08
PROJECT IP
USE DIMENSIONS ONLY
SCALE N.T.S.

USE APPROVED DRAWINGS ONLY FOR CONSTRUCTION PURPOSES

0201-0601-SD53

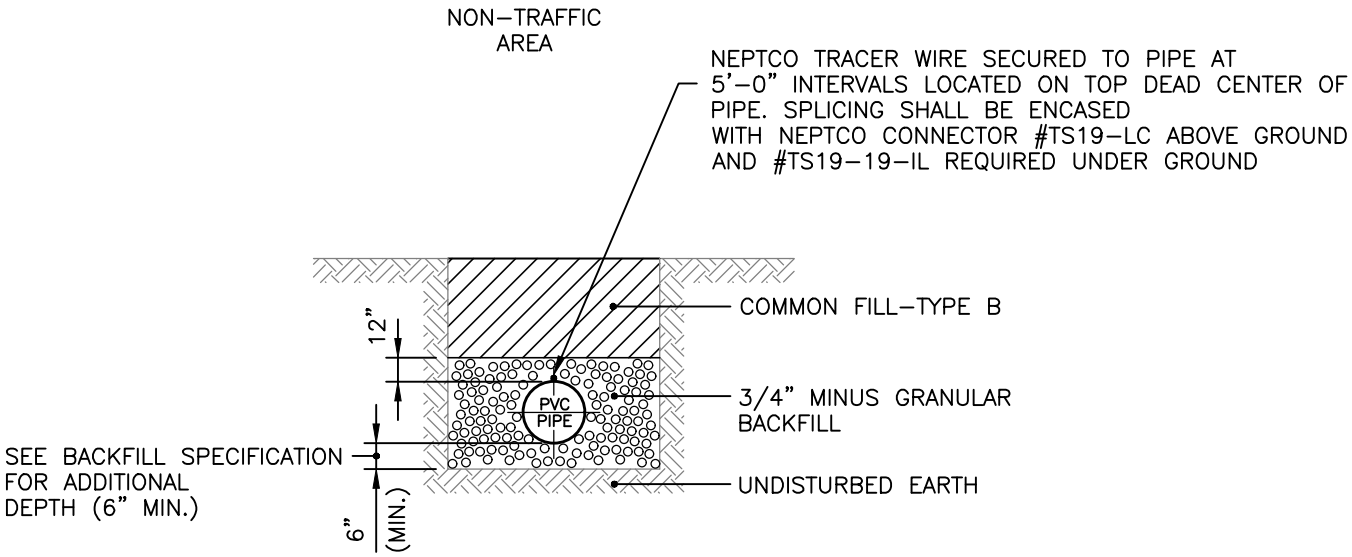

DETAIL "A"

PVC – ROCK/SOIL
(FOR AREAS NOT TO BE PAVED)

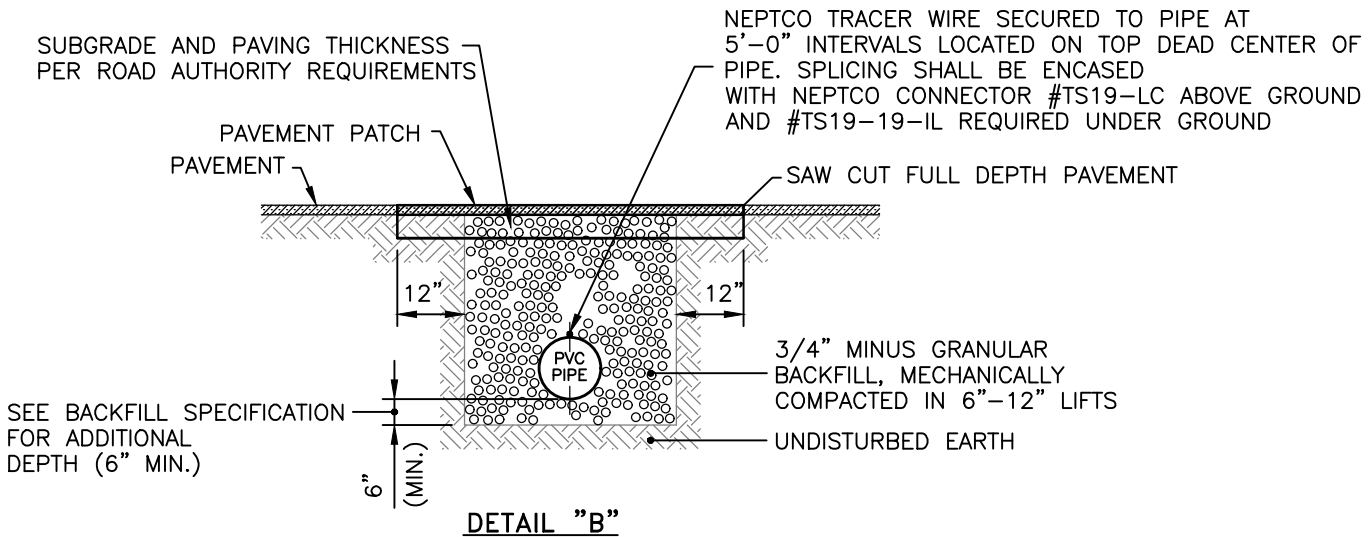

DETAIL "B"

FOR TRAFFIC AREAS AND
WITHIN 36" OF TRAFFIC AREAS.

NOTE:
SEE SPECIFICATION SECTION 02210
FOR DESCRIPTION OF BACKFILL AND BEDDING MATERIAL.

NOTE:

1. CAUTION MUST BE EXERCISED TO ENSURE PROPER PLACEMENT OF EMBEDMENT MATERIAL UNDER THE HAUNCHES OF THE PIPE.

REVISIONS	MISSOURI AMERICAN WATER STANDARD CIVIL TYPICAL INSTALLATION – PVC PIPE IN ROCK/SOIL DETAIL
	MISSOURI AMERICAN WATER ST. LOUIS, MO. 63141
	MISSOURI AMERICAN WATER ENGINEERING 727 CRAIG ROAD ST. LOUIS, MO. 63141
	DRAWN BY MEG · PROJECT ENG'R · APPROVED · DATE 11–30–18 · PROJECT IP · USE DIMENSIONS ONLY · SCALE N.T.S.
	USE APPROVED DRAWINGS ONLY FOR CONSTRUCTION PURPOSES
	0201–0601–SD54

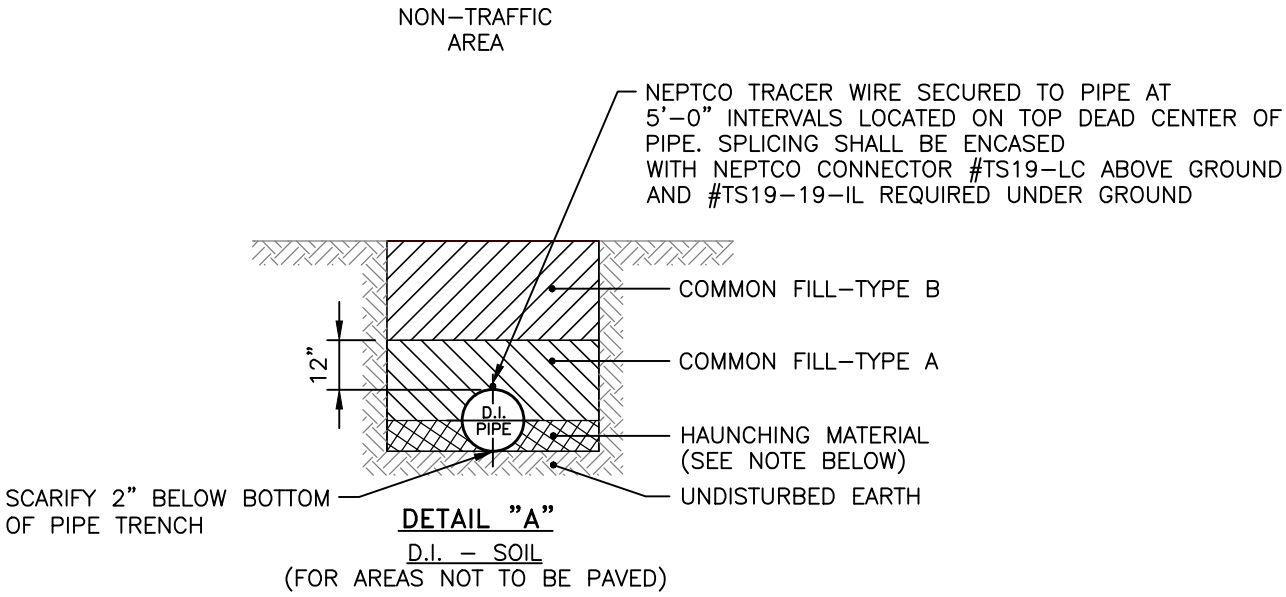

DETAIL "A"

D.I. – SOIL

(FOR AREAS NOT TO BE PAVED)

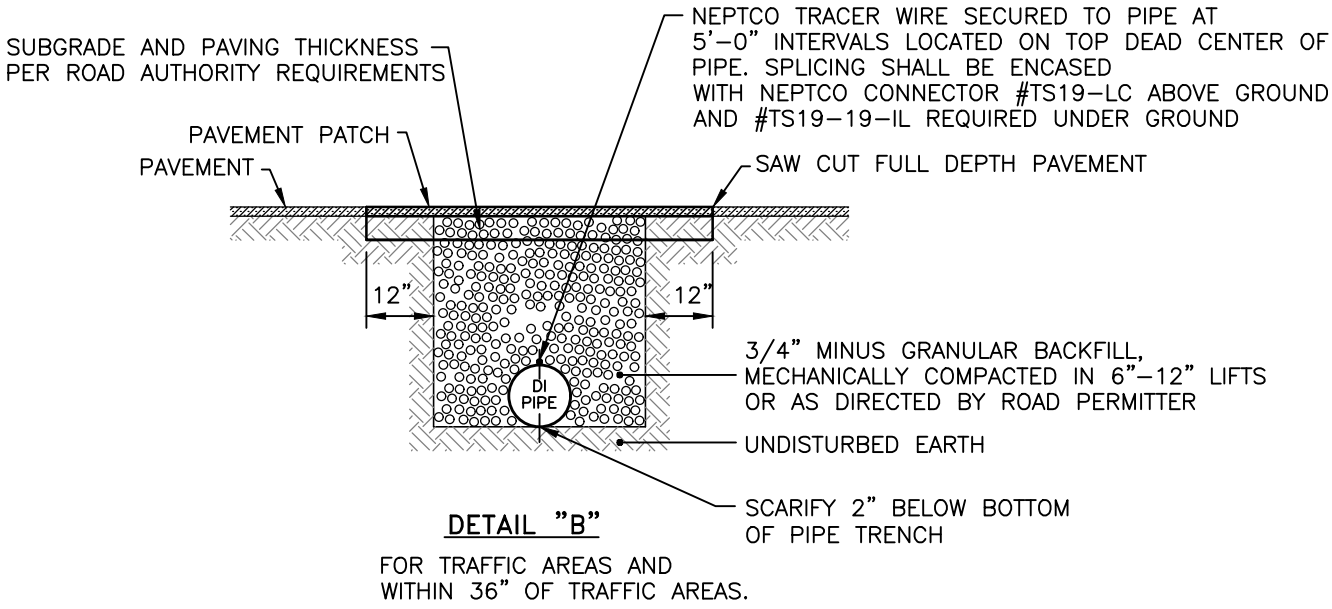

DETAIL "B"

FOR TRAFFIC AREAS AND WITHIN 36" OF TRAFFIC AREAS.

NOTE: SEE SPECIFICATION SECTION 02210 FOR DESCRIPTION OF BACKFILL AND BEDDING MATERIAL.

NOTES:

1. CAUTION MUST BE EXERCISED TO ENSURE PROPER PLACEMENT OF EMBEDMENT MATERIAL UNDER THE HAUNCHES OF THE PIPE.
2. POLYETHYLENE ENCASING ON ALL D.I. PIPE, FITTINGS, VALVES & APPURTENANCES.

REVISIONS

MISSOURI AMERICAN WATER STANDARD CIVIL
TYPICAL INSTALLATION – D.I. PIPE IN SOIL DETAIL

MISSOURI AMERICAN WATER
ST. LOUIS, MO. 63141

MISSOURI AMERICAN WATER ENGINEERING
727 CRAIG ROAD
ST. LOUIS, MO. 63141

AMERICAN WATER

DRAWN BY MEG
PROJECT ENG'R
APPROVED
DATE 11–30–18
PROJECT IP
USE DIMENSIONS ONLY
SCALE N.T.S.

USE APPROVED DRAWINGS ONLY FOR CONSTRUCTION PURPOSES

0201–0601–SD55

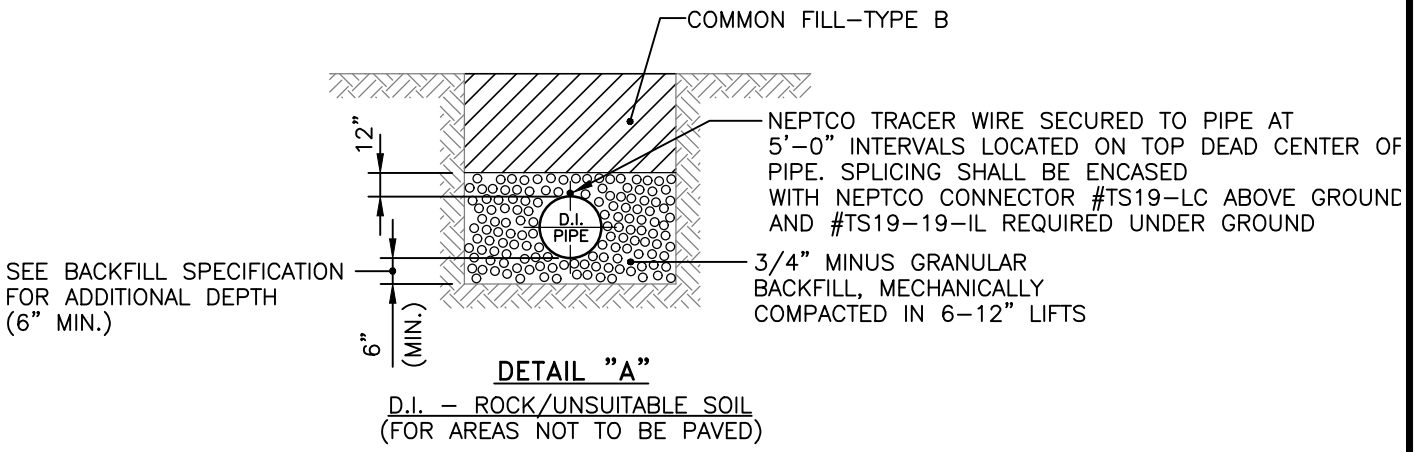

DETAIL "A"

D.I. – ROCK/UNSUITABLE SOIL
(FOR AREAS NOT TO BE PAVED)

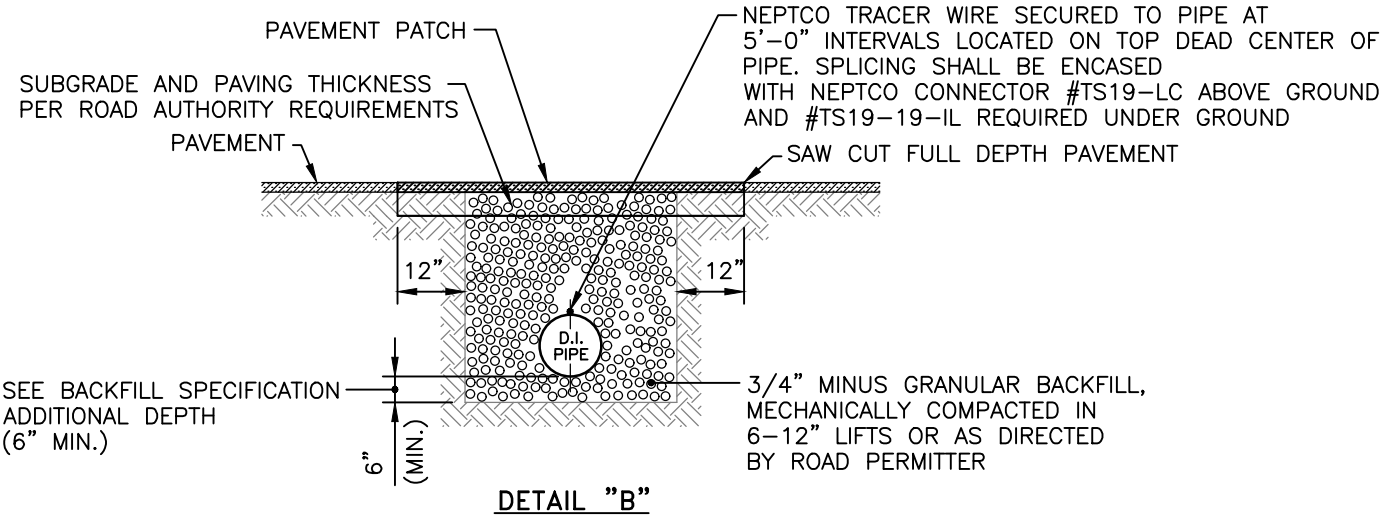

DETAIL "B"

FOR TRAFFIC AREAS AND
WITHIN 36" OF TRAFFIC AREAS.

NOTE: SEE SPECIFICATION SECTIONS FOR DESCRIPTION OF BACKFILL AND BEDDING MATERIAL.

NOTES:

1. CAUTION MUST BE EXERCISED TO ENSURE PROPER PLACEMENT OF EMBEDMENT MATERIAL UNDER THE HAUNCHES OF THE PIPE.
2. POLYETHYLENE ENCASING ON ALL D.I. PIPE, FITTINGS, VALVES & APPURTENANCES

REVISIONS

MISSOURI AMERICAN WATER STANDARD
CIVIL
TYPICAL INSTALLATION – D.I. PIPE IN ROCK DETAIL

MISSOURI AMERICAN WATER
ST. LOUIS, MO. 63141

MISSOURI AMERICAN WATER ENGINEERING
727 CRAIG ROAD
ST. LOUIS, MO. 63141

AMERICAN WATER

DRAWN BY MEG
PROJECT ENG'R
APPROVED
DATE 11–30–18
PROJECT IP
USE DIMENSIONS ONLY
SCALE N.T.S.

USE APPROVED DRAWINGS ONLY FOR CONSTRUCTION PURPOSES

0201–0601–SD56

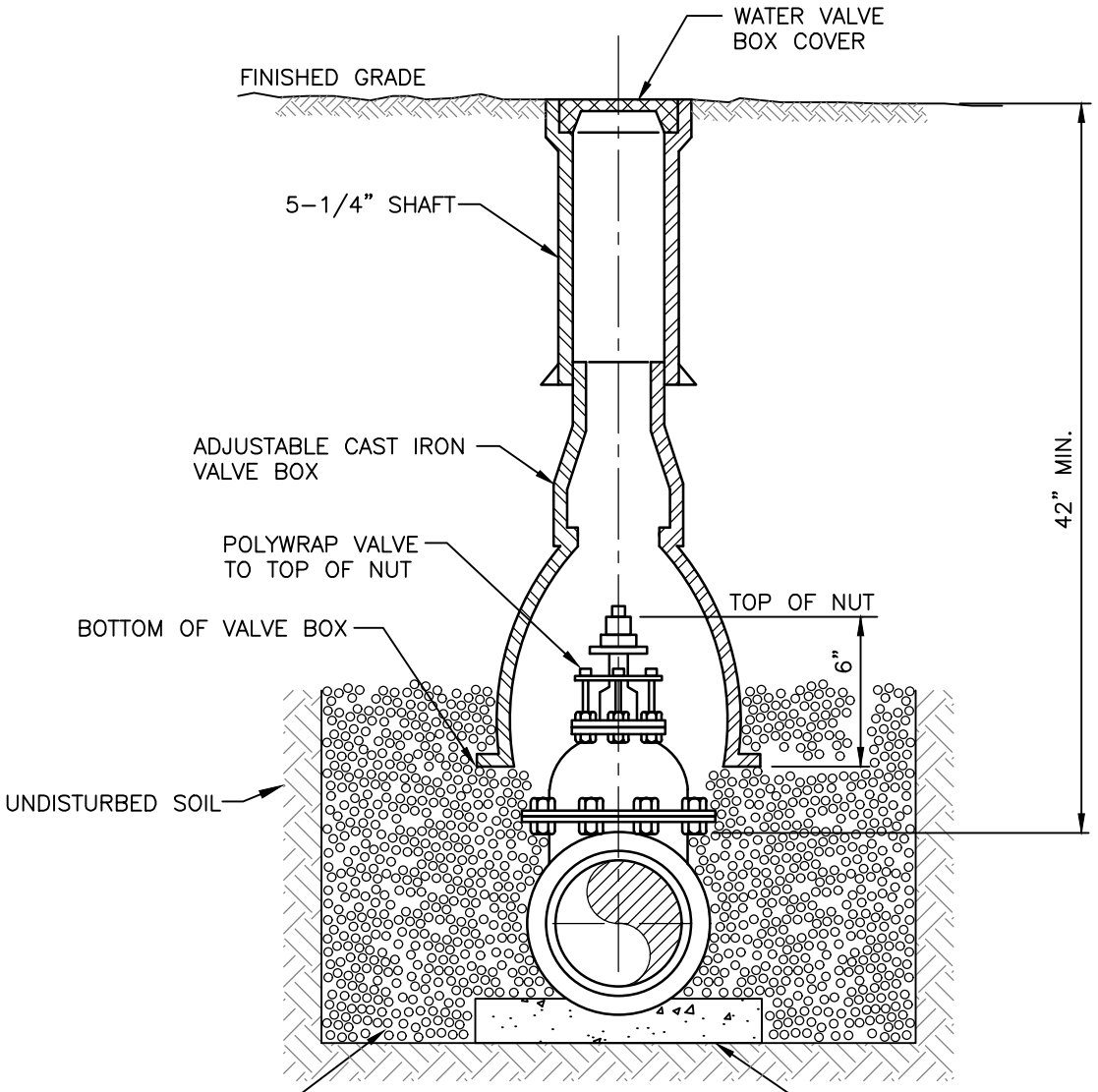

REVISIONS

MISSOURI AMERICAN WATER STANDARD CIVIL VALVE BOX INSTALLATION DETAIL

MISSOURI AMERICAN WATER
ST. LOUIS, MO. 63141

MISSOURI AMERICAN WATER ENGINEERING
727 CRAIG ROAD
ST. LOUIS, MO. 63141

AMERICAN WATER

DRAWN BY KKM
PROJECT ENG'R
APPROVED

DATE 11–13–08
PROJECT IP

USE DIMENSIONS ONLY
SCALE N.T.S.

USE APPROVED DRAWINGS ONLY
FOR CONSTRUCTION PURPOSES

0201–0601–SD59

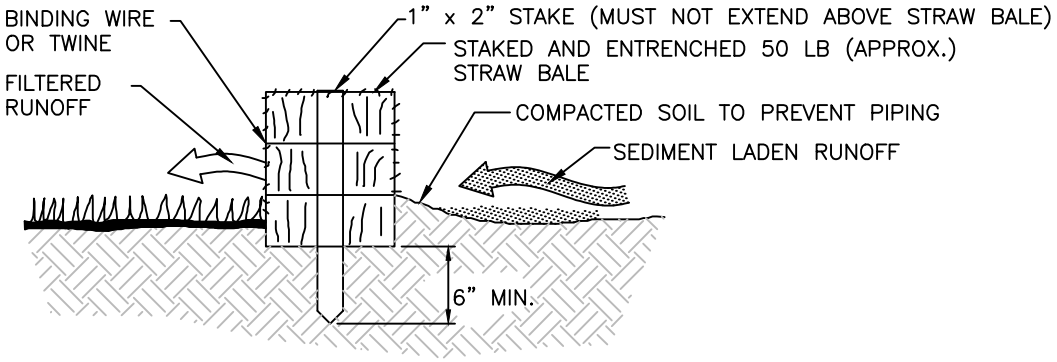

PROPERLY INSTALLED STRAW BALE (CROSS–SECTION)

1. EXCAVATE THE TRENCH MIN. 4" DEEP.

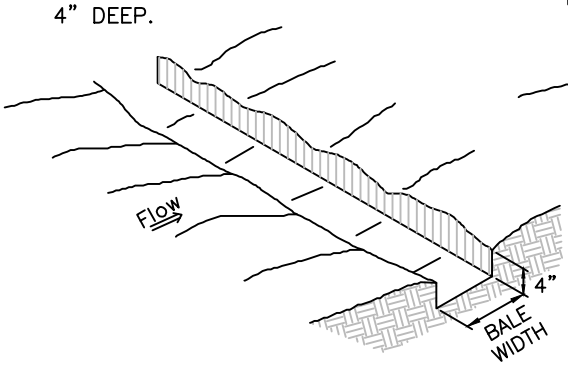

2. PLACE AND STAKE STRAW BALES.

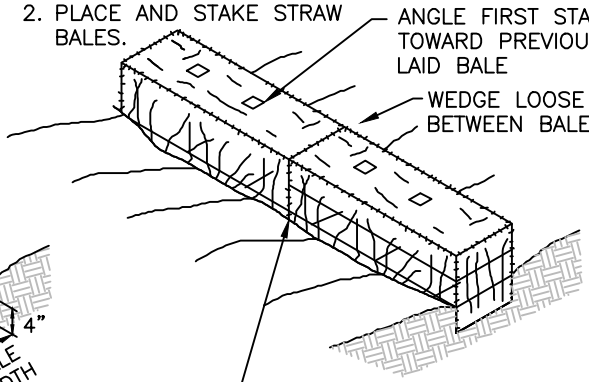

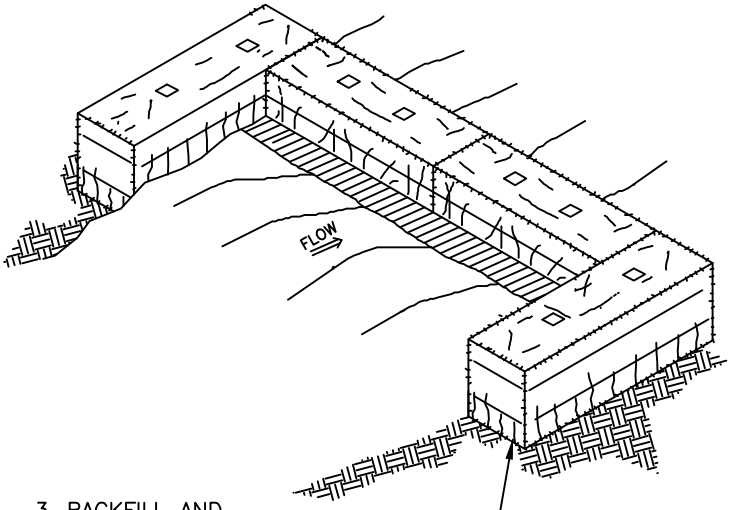

3. BACKFILL AND COMPACT THE EXCAVATED SOIL.

END BALES WHEN NECESSARY TO PREVENT FLOW AROUND ENDS

NOTES:

1. SEDIMENT MUST BE REMOVED DAILY.
2. ANY SECTION, WHICH HAS BEEN UNDERMINED OR TOPPED, MUST BE IMMEDIATELY REPLACED.
3. ENDS OF STRAW BALES MUST BE INSTALLED TO PROHIBIT RUNOFF FROM BEING ALLOWED TO FLOW AROUND ENDS.

REVISIONS

MISSOURI AMERICAN WATER STANDARD
CIVIL
TEMPORARY STRAW BALE SEDIMENT BARRIER DETAILS

MISSOURI AMERICAN WATER
ST. LOUIS, MO. 63141

MISSOURI AMERICAN WATER ENGINEERING
727 CRAIG ROAD
ST. LOUIS, MO. 63141

AMERICAN WATER

DRAWN BY KKM
PROJECT ENG'R
APPROVED
DATE 11-13-08
PROJECT IP
USE DIMENSIONS ONLY
SCALE N.T.S.

USE APPROVED DRAWINGS ONLY FOR CONSTRUCTION PURPOSES

0201-0601-SD67

0201-0601-SD67

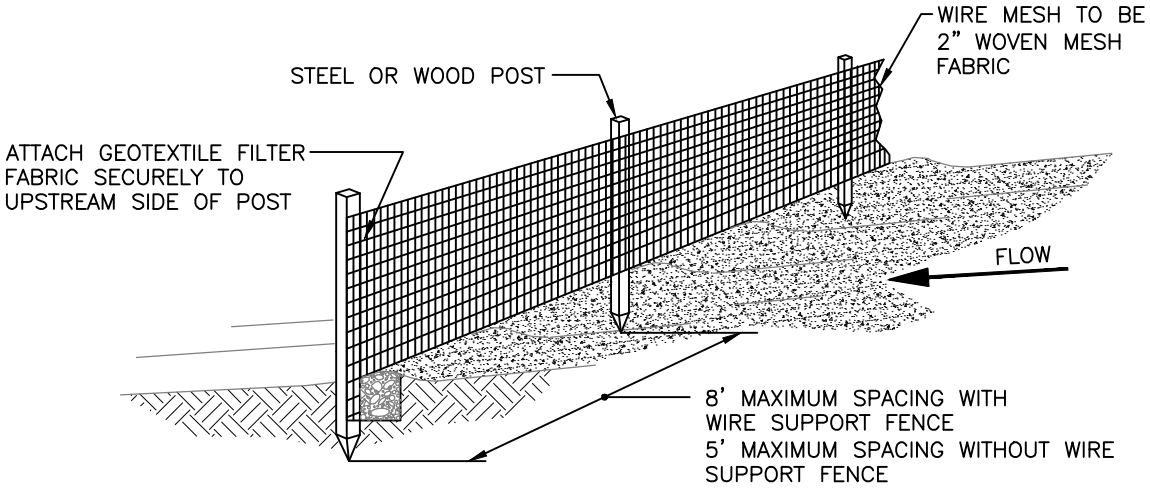

SILT FENCE MUST BE INSPECTED AND MAINTAINED DAILY

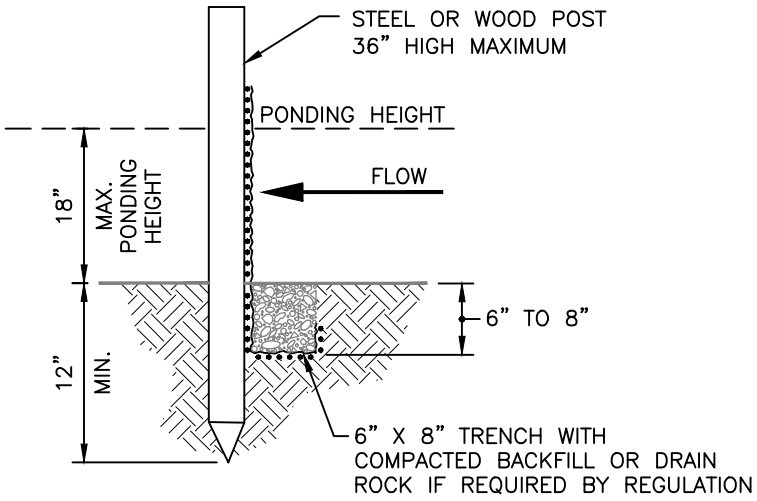

TRENCH DETAIL

NOTES:

1. BOTTOM OF FILTER FABRIC FENCE MUST BE INSTALLED A MINIMUM OF 6" BELOW GRADE. BOTH ENDS OF EACH FENCE SECTION MUST EXTEND AT LEAST 8 FEET UPSLOPE AT 45 DEGREES TO THE MAIN FENCE ALIGNMENT.
2. ACCUMULATED SEDIMENT MUST BE INSPECTED AND REMOVED DAILY.
3. ANY FENCE SECTION, WHICH HAS BEEN UNDERMINED OR TOPPED, MUST BE IMMEDIATELY REPLACED.
4. WHERE ENDS OF FILTER FABRIC COME TOGETHER, THEY MUST BE OVERLAPPED, FOLDED AND STAPLED TO PREVENT SEDIMENT BYPASS. THE TOE ANCHOR MUST BE BACKFILLED AND COMPACTED TO A DENSITY EQUAL TO THE SURROUNDING SOILS.

REVISIONS	MISSOURI AMERICAN WATER STANDARD CIVIL SILT FENCE DETAIL
	MISSOURI AMERICAN WATER ST. LOUIS, MO. 63141
	MISSOURI AMERICAN WATER ENGINEERING 727 CRAIG ROAD ST. LOUIS, MO. 63141 AMERICAN WATER
	DRAWN BY KKM PROJECT ENG'R APPROVED DATE 02-27-09 PROJECT IP USE DIMENSIONS ONLY SCALE N.T.S.
	USE APPROVED DRAWINGS ONLY FOR CONSTRUCTION PURPOSES 0201-0601-SD68

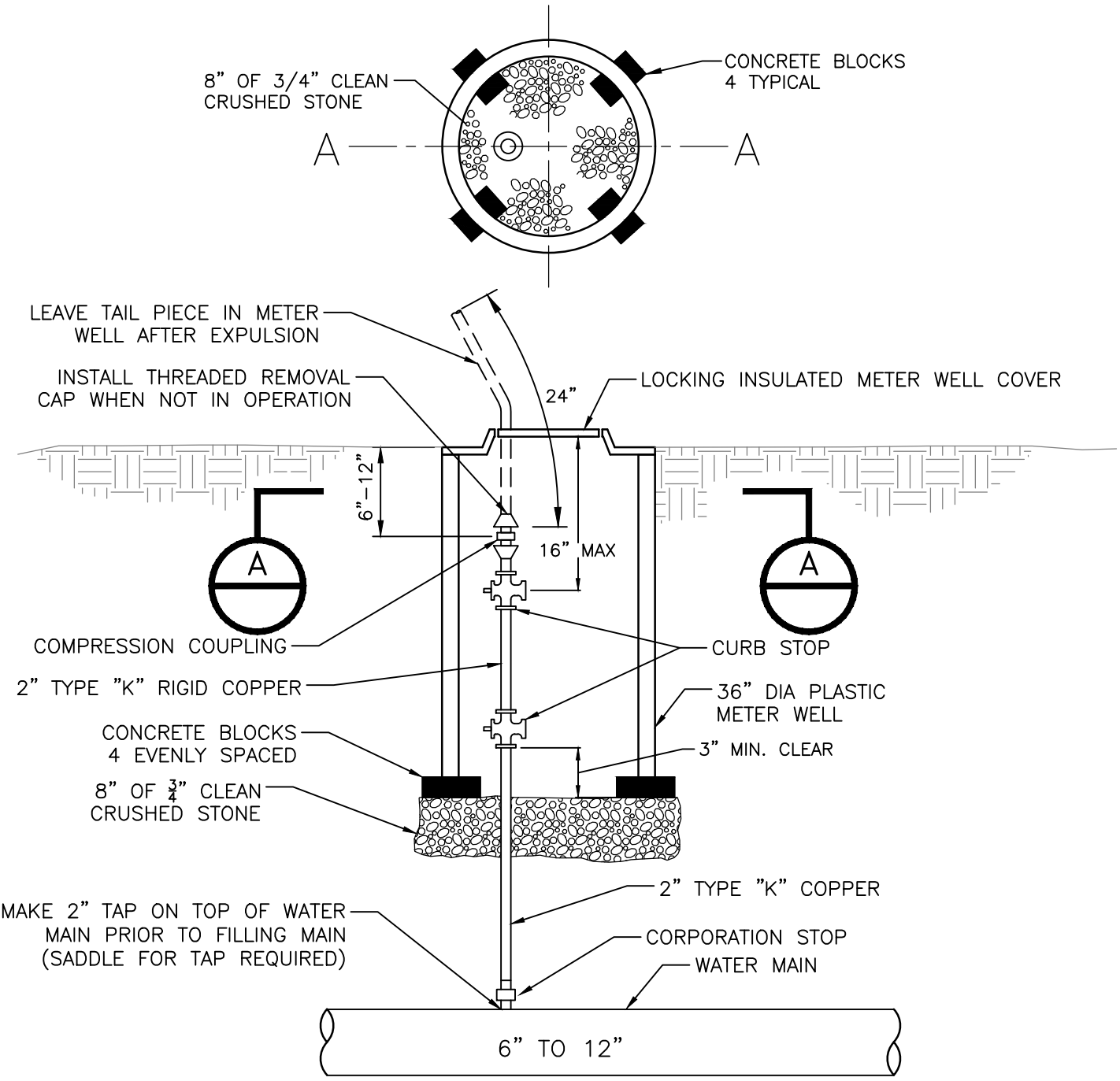

REVISIONS	MISSOURI AMERICAN WATER STANDARD CIVIL MANUAL AIR RELEASE VALVE DETAIL
	MISSOURI AMERICAN WATER ST. LOUIS, MO. 63141
	MISSOURI AMERICAN WATER ENGINEERING 727 CRAIG ROAD ST. LOUIS, MO. 63141
	DRAWN BY MEG PROJECT ENG'R APPROVED DATE 11-30-19 PROJECT IP USE DIMENSIONS ONLY SCALE N.T.S.
	USE APPROVED DRAWINGS ONLY FOR CONSTRUCTION PURPOSES 0201-0601-SD69

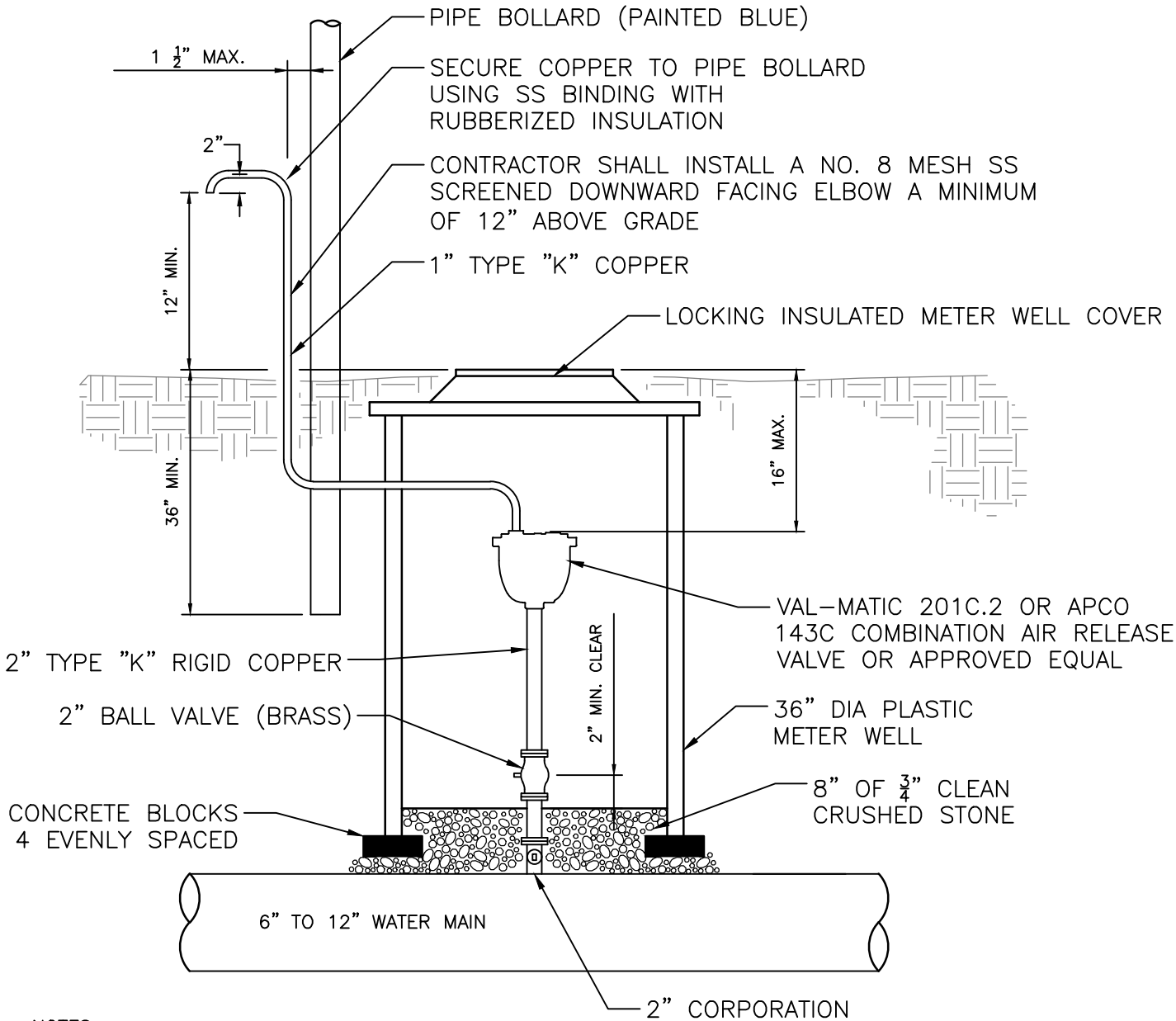

NOTES:

1. THE APPLICATION AND LOCATION MUST BE APPROVED PRIOR TO INSTALLATION. IT IS DESIGNED FOR AREAS WHERE THE RISK OF FILLING THE METER WELL WITH DISCHARGE WATER EXISTS.
2. THE COMBINATION AIR VACUUM OPTION MUST BE APPROVED BY AN AMERICAN WATER REPRESENTATIVE PRIOR TO INSTALLATION.

REVISIONS

MISSOURI AMERICAN WATER STANDARD
CIVIL
AUTOMATIC COMBINATION AIR RELEASE/VACUUM VALVE DETAIL

MISSOURI AMERICAN WATER
ST. LOUIS, MO. 63141

MISSOURI AMERICAN WATER ENGINEERING
727 CRAIG ROAD
ST. LOUIS, MO. 63141

AMERICAN WATER

DRAWN BY MEG
PROJECT ENG'R
APPROVED
DATE 11-30-18
PROJECT IP
USE DIMENSIONS ONLY
SCALE N.T.S.

USE APPROVED DRAWINGS ONLY FOR CONSTRUCTION PURPOSES

0201-0601-SD71

0201-0601-SD71

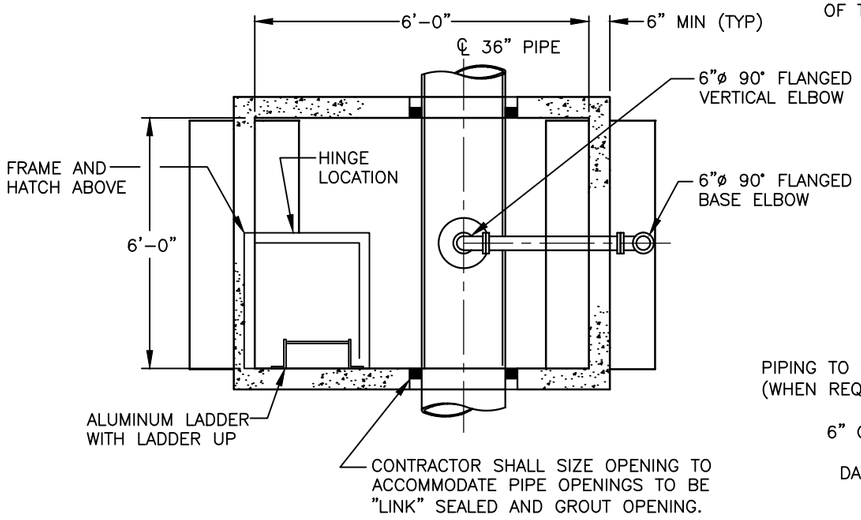

PLAN A-A

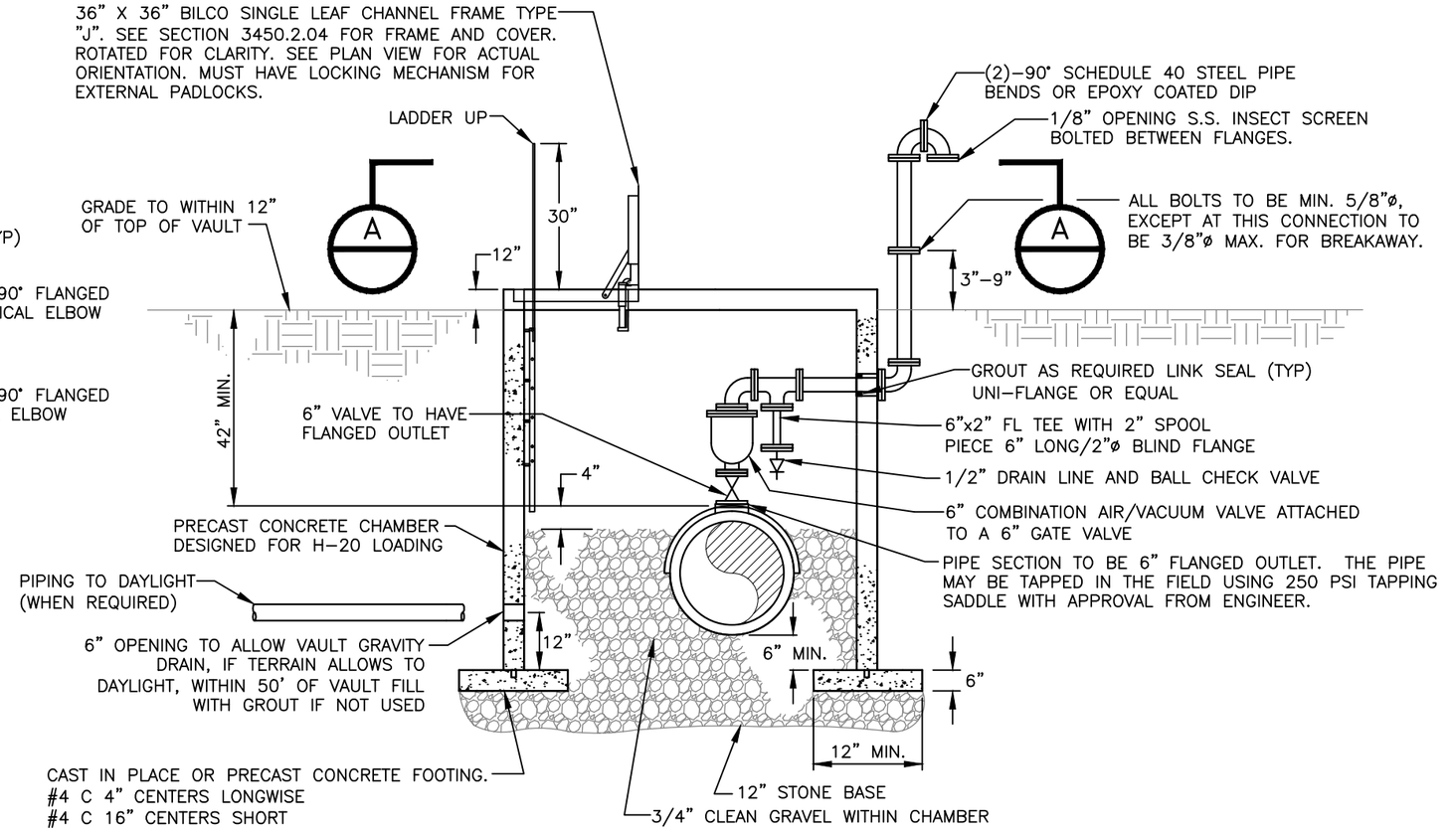

PROFILE VIEW

NOTES:

1. THIS DESIGN IS PROVIDED FOR LOCATIONS WHERE THERE IS A RISK OF THE MANHOLE FILLING WITH DISCHARGE WATER.
2. 6"ø SCH. 40 STEEL FLANGED PIPING. USE TNEMEC SERIES 1 PRIME COAT AND SERIES 1074U "BLUE" COLOR. (10 MIL. DFT) TOTAL THICKNESS FOR ALL STEEL PIPING.
3. VAULT TO BE DESIGNED AND MANUFACTURED FOR INTERMITTENT LOAD BEARING. PREFABRICATED VAULT MUST HAVE SUBMITTAL INDICATING SUCH. CAST IN PLACE VAULTS MUST HAVE PROFESSIONAL ENGINEER SEAL ON CONCRETE, STEEL, AND VAULT DESIGN SUBMITTAL. (DESIGN SHOWN IS NOT FOR TRAFFIC AREAS)
4. PIPE FITTING AND AIR RELEASE SIZES CAN BE CHANGED 4" THRU 6" TO ACCOMMODATE PIPE SIZES 16" AND LARGER WITH APPROVAL FROM THE ENGINEER.
5. DESIGN IS FOR NON-LOAD BEARING STRUCTURE.

REVISIONS

MISSOURI AMERICAN WATER STANDARD
CIVIL
COMBINATION AIR RELEASE VACUUM
16" AND LARGER DETAIL

MISSOURI AMERICAN WATER
ST. LOUIS, MO. 63141

MISSOURI AMERICAN WATER ENGINEERING
727 CRAIG ROAD
ST. LOUIS, MO. 63141

DRAWN BY KKM
PROJECT ENG'R
APPROVED
DATE 11-13-08
PROJECT IP
USE DIMENSIONS ONLY
SCALE N.T.S.

AMERICAN WATER

USE APPROVED DRAWINGS ONLY FOR CONSTRUCTION PURPOSES

0201-0601-SD72

0201-0601-SD72