Z&P Meeting: March 12, 2018
City Council Meeting: April 2, 2018

STAFF PLANNING REPORT
Site Plan

CASE 009-18 Site Plan Review

NAME OF SITE PLAN Countryside Mini-Storage

LOCATION: 1813 W. 20th St.

APPLICANT: Countryside Self Storage

PRESENT ZONING: C3-PD, Commercial Overlay District

PRESENT LAND USE: Undeveloped

SITE CONTEXT:

	North	East	South	West
Existing Zoning	C3-PD	C3-PD	N.A.	C3-PD
Land Use	Mini-storage	Mini-storage	20th St.	Youth Facility

SUBDIVISION/TRACT:

Number of lots
1

TRANSPORTATION:

Streets with access	Classification	Right-of-way width
20th St.	Collector	60’

WILL TURNING MOVEMENTS OF THE PROPOSED USE CREATE AN UNDUE TRAFFIC HAZARD?

No, ingress/egress will occur through the adjacent and existing mini-storage site. There will be not additional driveways installed that would create a potential traffic hazard.

UTILITIES

Utilities are located on site and have sufficient capacities to serve this proposed development.

FLOOD PLAIN

N.A.

DISCUSSION

The planned (PD) overly district requires the review and approval of the site plan prior to the issuance of a building permit. The site plan submitted for review shows the construction of mini-storage units adjacent to the existing Countryside self-storage facility. The proposed project includes a 11,400 sq. ft. building that includes both climate and non-climate controlled storage units. Ingress/egress will come from the existing Countryside self-storage site. No additional driveways will be located on 20th St. which helps minimize traffic conflicts.

Staff has reviewed the site plan and has determine that it meets the requirements of our zoning code, including, materials used on the front (south) side building eleavation.

Staff recommends approval of Case 009-18.

ENCLOSURES:

Site Plan

CITY OF JOPLIN, MISSOURI

SITE PLAN REVIEW CHECKLIST

Return Form to:
Planning/Community Development Specialist
Joplin City Hall
602 South Main Street
Joplin, Missouri 64801
417-624-0820 Ext. 511
FAX 417-625-4738

For Office Use Only
Case No: 009-18
Filing: ~~$450.00~~ 500.00
Date Advertised: _____
Date Notices Sent: _____
Public Hearing Date: _____

I. **Name of Project:** Countryside Self-Storage Expansion

II. **Location of Project:** 1813 W. 20th Street

III. **Name of Owner:** Maiden Lane Storage, LLC

IV. **Name of Person who Prepared the Site Plan:** Professional Engineering Consultants

V. **Instructions:**

The following checklist is to be completed by the applicant/developer and shall accompany the Site Plan when it is submitted to the Planning and Zoning Commission. The Site Plan shall include the following data, details and supporting information which are found to be relevant to the proposal. All site plans shall be prepared by an architect or landscape architect registered in the State of Missouri, or by a professional engineer licensed in the State of Missouri. The number of pages submitted will depend on the proposal's size and complexity.

Does the Site Plan comply with or show the following?	Yes	No
A. Name of the project, address, boundaries, date, north arrow and scale of the plan.	X	
B. Name and address of the owner of record, developer, and seal of the engineer, architect or landscape architect.	X	
C. Name and address of all owners of record of abutting parcels.	X	
D. All existing lot lines, easements, and rights-of-way. Include area in acres or square feet, abutting land uses and structures. 0.8 acres	x	
E. The location and use of all existing and proposed buildings and structures within the development. Include all dimensions of height and floor area, show all exterior entrances and all anticipated future additions and alterations. For developments		

	in the "C-2" Central Business District (CBD), indicate design details to make new construction compatible with existing structures.	x	
F.	The location of all present and proposed public and private ways, parking areas, driveways, sidewalks, ramps, curbs and fences. Location type and screening details for all waste disposal containers shall also be shown.	X	
G.	The Municipal Planner may require location, height, intensity, and bulb type (e.g., fluorescent, sodium incandescent) of all external lighting fixtures. The direction of illumination and methods to eliminate glare onto adjoining properties.	X	
H.	The location, height, size, materials, and design of all proposed signage.	NA	
I.	A landscape plan showing all existing open space, trees forest cover and water sources, and all proposed changes to these features including the size and type of plant material. Water sources will include ponds, lakes, brooks, streams, wetlands, flood plains, and drainage retention areas.	X	
J.	The location of all existing and proposed utility systems including:		
	1. sewer lines and manholes;	X	
	2. water lines and fire hydrants;	x	
	3. telephone, cable and electrical systems; and	x	
	4. storm drainage system including existing and proposed drain lines, culverts, catch basins, headwalls, endwalls, hydrants, manholes, and drainage swales.	X	
K.	Plans to prevent the pollution of surface or groundwater, the erosion of soil both during and after construction, excessive run-off, excessive raising or lowering of the water table, and flooding of other properties, as applicable.	X	
L.	Existing and proposed topography shown at not more than two-foot contour intervals. All elevation shall refer to United States Geodetic Survey (U.S.G.S.) datum. If any portion of the parcel is within the 100-year flood plain, the area shall be shown, with base flood elevations; and the developer shall present plans for meeting Federal Emergency Management Agency (F.E.M.A.)		

	requirements.	X	
M.	Zoning district boundaries adjacent to the sites perimeter shall be drawn and identified on the plan.	X	
N.	Traffic flow patterns within the site, entrances and exits, loading and unloading areas, curb cuts on the site and within 100 feet of the site. The City Engineer may require a detailed traffic study for mixed use and multi-tenant developments, or for developments in heavy traffic areas to include:		
	1. The projected number of motor vehicle trips to enter or leave the site, estimated for daily and peak hour traffic levels.	NA	
	2. The projected traffic flow pattern including vehicular movements at all major intersections likely to be affected by the proposed use of the site; and	X	
	3. The impact of this traffic upon existing abutting public and private ways in relation to existing road capacities. Existing and proposed daily and peak hour traffic levels, as well as road capacity levels, shall also be given.	NA	
O.	For new construction or alterations to any existing structure, a table containing the following information must be included:		
	1. Area of structure to be used for a particular use, such as retail operation, office, storage, etc.;	X	
	2. Maximum number of employees;	NA - 0	

3.	Maximum seating capacity, where applicable;	NA	
4.	Number of parking spaces existing and required for the intended use; and	X	
5.	A landscape plan for improving large areas of paved parking with appropriate landscaping may be required.	X	

SIGNATURE: Curtis L. Frazier

Digitally signed by Curtis L. Frazier
DN: cn=Curtis L. Frazier, o=Mainland Valuation Services, ou=MVS, email=curt@mainlandvaluation.com, c=US

DATE: 2/1/2008

BY: TITLE: Owner / Managing member

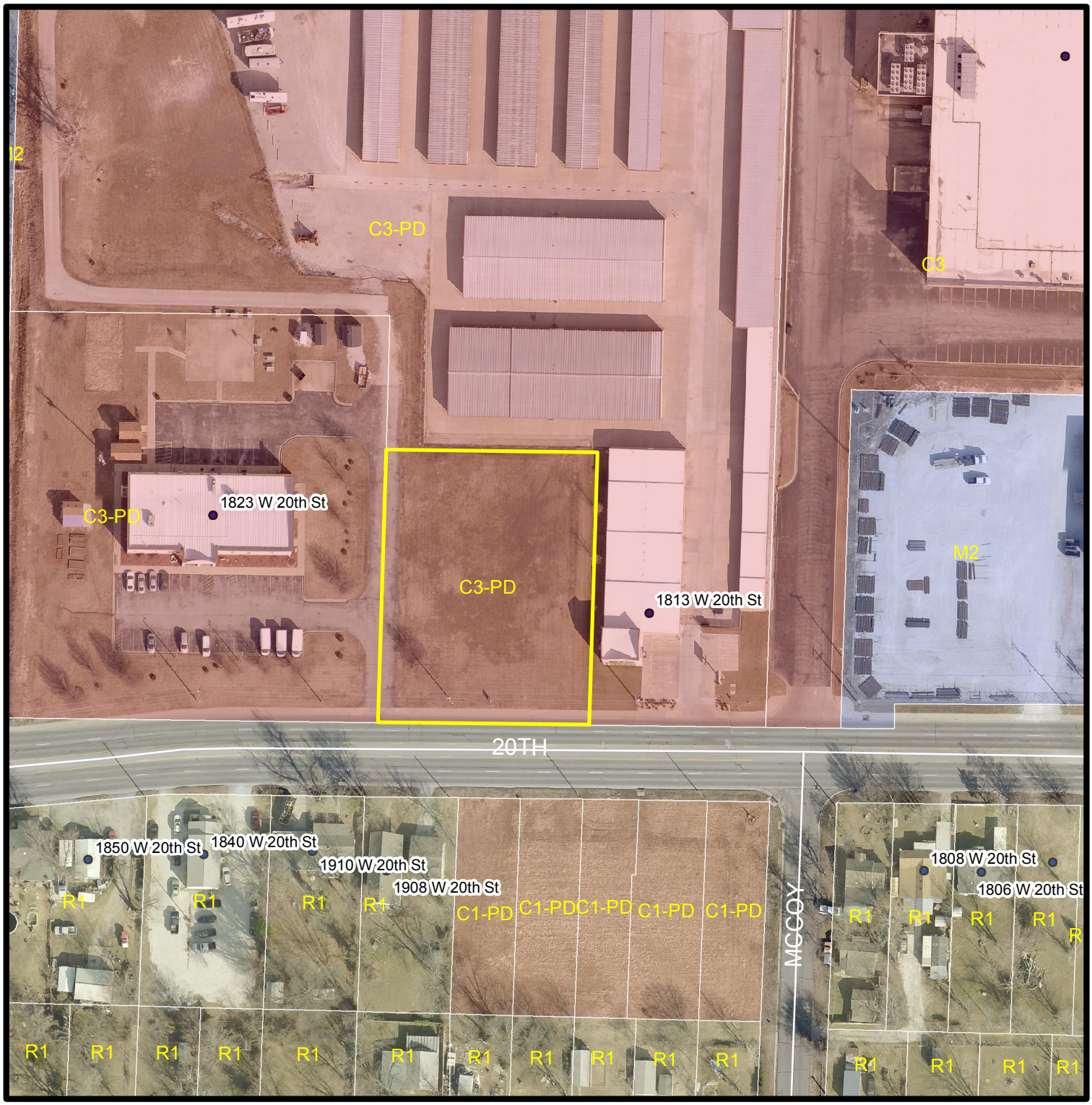

Case 009-18: A request to review the site plan for proposed mini-storage units located at 1813 W. 20th St. - Countryside Self-Storage.

COUNTRYSIDE SELF STORAGE

CONSTRUCTION PLANS

FOR

PHASE V 2018 BUILDING IMPROVEMENTS

JOPLIN, MISSOURI
1813 W. 20TH STREET
PEC PROJ. NO. 335-14E79-5956

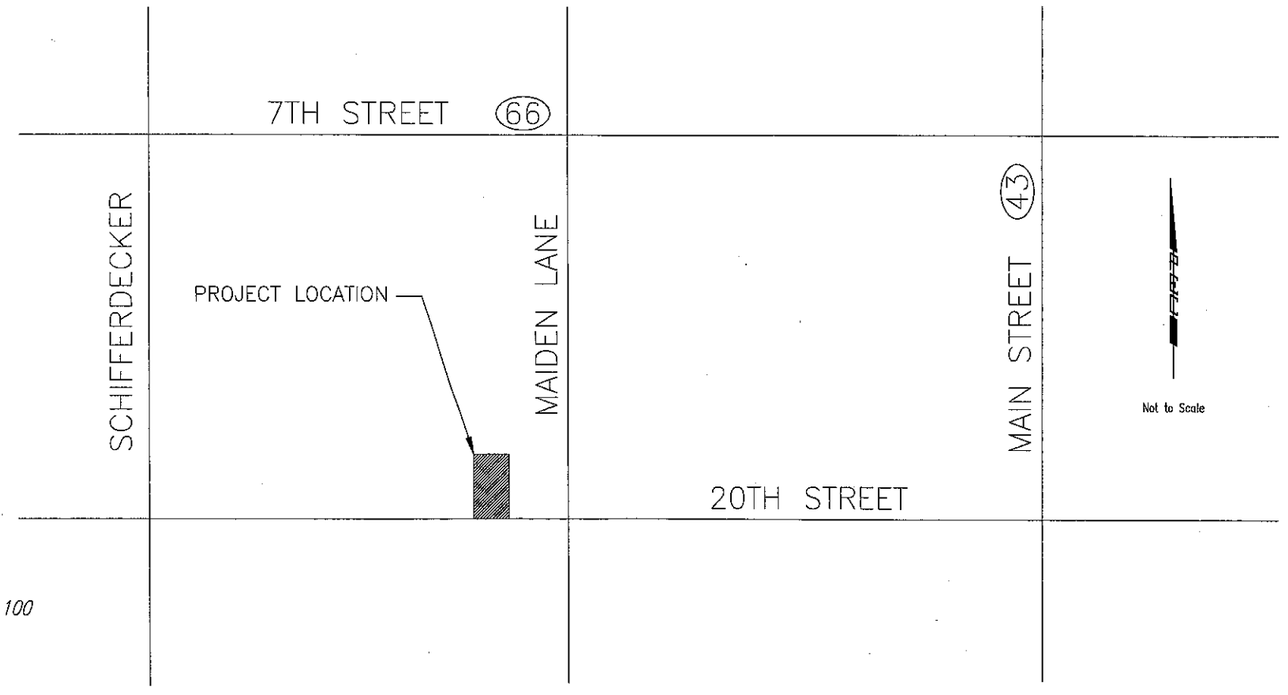

Not to Scale

INDEX OF SHEETS

1. TITLE SHEET
2. GENERAL NOTES/SURVEY CONTROL/KEY MAP
3. SITE PLAN
4. GRADING PLAN
5. CONCRETE PAVEMENT JOINT LAYOUT PLAN
6. MISCELLANEOUS DETAILS
7. EROSION CONTROL PLAN
8.–9. EROSION CONTROL AND SEDIMENT BARRIER DETAILS
10. LANDSCAPE PLAN

OWNER

MAIDEN LANE STORAGE
12760 W. 8TH STREET PARKWAY, SUITE 100
LENEXA, KS 66215
(913) 449-0851
c/o CURT FRAZIER

JANUARY 2018

PLANS PREPARED BY

PROFESSIONAL ENGINEERING CONSULTANTS, P.A.

ENGINEERS
PITTSBURG, KANSAS

STATE OF MISSOURI
MATTHEW BILLINGSLEA
NUMBER PE-2007005009
01/31/2018
PROFESSIONAL ENGINEER

PEC PROFESSIONAL ENGINEERING CONSULTANTS, P.A.
104 SOUTH PINE PITTSBURG, KS 66762
620-235-0195 www.pec1.com

Saved 01-31-2018 10:56:31 AM by BRS
Plot Scale 1:1 01-31-2018 10:59:12 AM by BRANDON SEWERT
U:\Pittsburg\2014\14E79\000\Work\Drawings\Plan Set\14E79-000_C001-Title Sheet

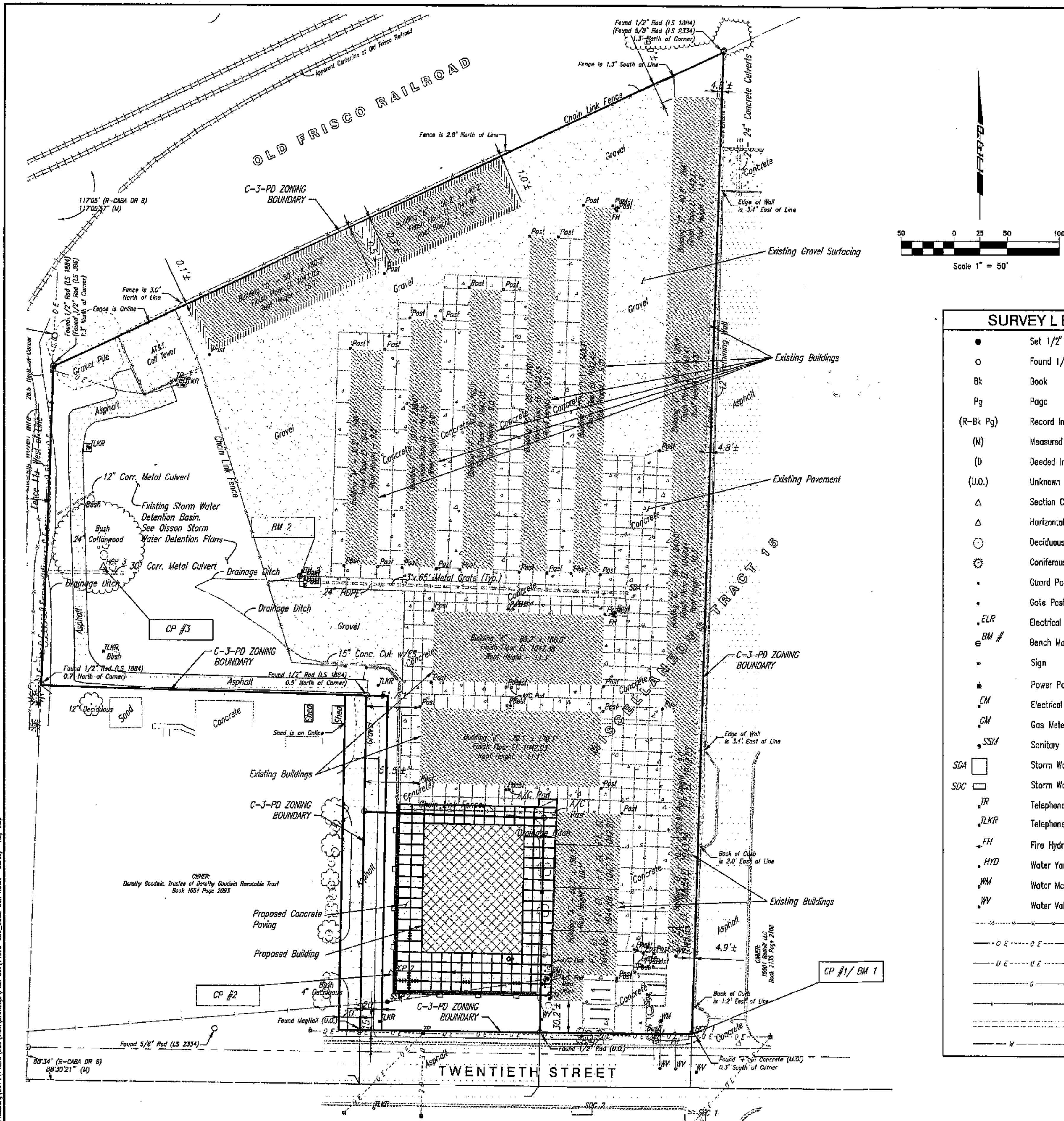

Scale 1" = 50'

PAVING LEGEND

	= PROP. CONCRETE PAVEMENT
	= EX. CONCRETE PAVEMENT
	= PROP. BUILDING ADDITION
	= PROP. CURB AND GUTTER
	= EX. BUILDING
	= EX. GRAVEL SURFACING
	= EX. PAVEMENT JOINT

SURVEY LEGEND

●	Set 1/2" x 24" Rebar
○	Found 1/2" Rebar
Bk	Book
Pg	Page
(R-Bk Pg)	Record Information
(M)	Measured Information
(D	Deeded Information
(U.O.)	Unknown Origin
△	Section Corner
△	Horizontal Control Point
	Deciduous Tree
	Coniferous Tree
•	Guard Post
•	Gate Post
ELR	Electrical Riser
BM #	Bench Mark/Vertical Control Point
	Sign
	Power Pole
EM	Electrical Meter
GM	Gas Meter
SSM	Sanitary Sewer Manhole
SDA	Storm Water Drain Area Inlet
SDC	Storm Water Drain Curb Inlet
TR	Telephone Riser
TLKR	Telephone Marker
FH	Fire Hydrant
HYD	Water Yard Hydrant
WM	Water Meter
WV	Water Valve
—x—x—	Fence Types
— OE — OE —	Overhead Electric Line
— UE — UE —	Buried Electric Line
— G —	Gas Line
	Sanitary Sewer Line
	Culvert
— W —	Waterline

GENERAL NOTES:

1. SURVEY STAKES AND BENCH MARKS DESTROYED BY THE CONTRACTOR WILL BE REPLACED AT THE CONTRACTOR'S EXPENSE.
2. ALL ADJACENT BUILDINGS, STRUCTURES, PARKING LOTS, DRIVES, STREET PAVEMENTS, UTILITY LINES, UTILITY STRUCTURES AND APPURTENANCES OTHER THAN SHOWN FOR REPLACEMENT SHALL BE PROTECTED FROM DAMAGE DURING CONSTRUCTION OF THE PROJECT. ITEMS DAMAGED BEYOND THE LIMITS SHOWN ON THE DRAWINGS SHALL BE REMOVED AND REPLACED BY THE CONTRACTOR AT NO ADDITIONAL COST TO THE OWNER.
3. THE CONTRACTOR SHALL PROMPTLY, AND BEFORE SUCH CONDITIONS ARE DISTURBED, NOTIFY THE ENGINEER IF CONDITIONS ON THE SITE DIFFER FROM THOSE SHOWN ON THE PLANS.
4. THE CONTRACTOR WILL BE REQUIRED TO PROVIDE A MINIMUM OF SEVENTY-TWO (72) HOURS ADVANCED NOTICE TO ALL UTILITY OWNERS THROUGH MISSOURI ONE-CALL AT 1-800-344-7483 PRIOR TO THE BEGINNING OF CONSTRUCTION AND REQUEST THAT ANY EXISTING LINES BE FLAGGED. ANY UTILITY CARELESSLY DAMAGED BY HIS CONSTRUCTION OPERATIONS SHALL BE REPAIRED OR REPLACED AT NO EXTRA COST TO THE OWNER. THE CONTRACTOR SHALL COORDINATE WORK WITH CONTRACTORS FOR UTILITY COMPANIES AND OTHER AGENCIES FOR MINIMUM INCONVENIENCE TO THE GENERAL PUBLIC.
5. THE CONTRACTOR SHALL COMPLY WITH ALL APPLICABLE SAFETY REGULATIONS. INSURING THE SAFETY OF PERSONNEL DIRECTLY INVOLVED WITH THE PROJECT AND INSURING THE SAFETY OF THE PUBLIC SHALL BE THE CONTRACTOR'S RESPONSIBILITY.
6. CONTRACTOR SHALL OBTAIN ALL NECESSARY LOCAL AND STATE PERMITS.
7. TRAFFIC CONTROL ON PUBLIC STREETS SHALL BE PER M.U.T.C.D. REQUIREMENTS.
8. CONTRACTOR SHALL BE RESPONSIBLE FOR OBTAINING ANY REQUIRED MISSOURI STATE OPERATING PERMIT FROM THE MISSOURI DEPARTMENT OF NATURAL RESOURCES.
9. THE CONTRACTOR SHALL VERIFY LOCATIONS OF ALL UTILITY SERVICE LINES WITH THE OWNER.

SURVEY NOTES:

SURVEY IS BASED ON MISSOURI STATE PLANE COORDINATE SYSTEM, NAD 83, MISSOURI WEST ZONE PER NGS MONUMENTS JS 009 (PID HE1217) AND LINDER (HE1055).

VERTICAL INFORMATION IS NAVD 88 FROM PEC PROJECT NO. 08E34 VERIFIED BY NGS MONUMENT W 47 (PID HE0274).

COMBINED SCALE FACTOR OF .999895872 WAS USED TO CREATE "GROUND COORDINATES" FOR THIS PROJECT.

BEARINGS BASED ON THE MO COORDINATE SYSTEM 1983 WEST ZONE WITH THE SOUTH LINE OF THE SE 1/4 OF SEC 9-T27N-R33W BEING NORTH 89 DEGREES 26 MINUTES 18 SECONDS WEST (THE DEEDED BEARING OF NORTH 88 DEGREES 14 MINUTES 12 SECONDS WEST WAS NOT HELD FOR THIS SURVEY - STATE PLANE BEARINGS WERE HELD, RESULTING IN A MEASURED VS. DEEDED ROTATION DIFFERENCE OF 01 DEGREE 12 MINUTES 06 SECONDS).

ALL DISTANCES ARE PLATTED AND MEASURED, UNLESS NOTED OTHERWISE.

SITE IS ZONED C-3-PD - COMMERCIAL WITH PLANNED DEVELOPMENT DISTRICT

SITE CONTROL:

HORIZONTAL CONTROL POINT NO. 1 - N: 328,923.8441, E: 2,779,062.3702

CHISELED "+" IN SIDEWALK ON THE WEST SIDE OF THE EAST ENTRANCE ON THE NORTH SIDE OF 20TH STREET.
15.73' WEST TO TOP NUT OF FIRE HYDRANT.
74.74' EAST TO RAILROAD SPIKE IN ELECTRICAL POWER POLE.
42.23' NORTHWEST TO EAST FACE OF SELF-STORAGE SIGN.

HORIZONTAL CONTROL POINT NO. 2 - N: 328,979.7333, E: 2,778,779.2250

1/2" REBAR WITH "PEC CP" CAP ON EAST SIDE OF WEST DRIVE APPROXIMATELY 75'± NORTH OF NORTH SIDE OF 20TH STREET.
62.45' SOUTH SOUTHEAST TO NORTH FACE OF ELECTRICAL POWER POLE.
92.6' SOUTHWEST TO NORTH FACE OF ELECTRICAL POWER POLE.
28.4' WEST TO CENTERLINE ASPHALT DRIVE.

HORIZONTAL CONTROL POINT NO. 3 - N: 329,357.8643, E: 2,778,507.7641

1/2" REBAR WITH "PEC CP" CAP IN WEST SIDE OF DETENTION POND BANK APPROXIMATELY 200'± WEST OF NORTH/SOUTH FLOW LINE OF CURB.
20.5' EAST SOUTHEAST TO TOP OF 28" CMP.
78.45' SOUTH TO TELEPHONE MARKER.
21.90' WEST TO CENTERLINE OF ASPHALT ACCESS DRIVE.

BENCHMARK NO. 1 - N: 328,924, E: 2,779,062, EL: 1045.790

CHISELED "+" IN SIDEWALK ON THE WEST SIDE OF THE EAST ENTRANCE ON THE NORTH SIDE OF 20TH STREET.

BENCHMARK NO. 2 - N: 329,350, E: 2,778,694, EL: 1040.625

CHISELED SQUARE IN THE NORTHWEST CORNER OF NORTH WINGWALL OF CONCRETE BOX CULVERT THAT FLOWS WEST TO DETENTION POND.

STATE OF MISSOURI
MATTHEW BILLINGSLEA
NUMBER PE-2007006009
01/31/2018
PROFESSIONAL ENGINEER

COUNTRYSIDE SELF STORAGE

GENERAL NOTES/SURVEY CONTROL/ KEY MAP

PHASE V 2018 BUILDING IMPROVEMENTS - MAIDEN LANE STORAGE

PEC
PROFESSIONAL ENGINEERING CONSULTANTS, P.A.
104 SOUTH PINE PITTSBURG, KS 66762
620-235-0195 www.pec1.com

Designed by	JPD	Date	1-31-2018	Sht 2 of 10
Drawn by	DRB/BFS	Job No.	335-14E79-5956	

Saved 01-31-2018 9:26:57 AM by BFS
Plot Scale 1:1 01-31-2018 10:59:54 AM by BRANDON SEIWERT
U:\Pittsburg\2014\14E79\000\Muni\Drawings\Plan Set\14E79-000_C002 Gen Notes- Survey- Key Map

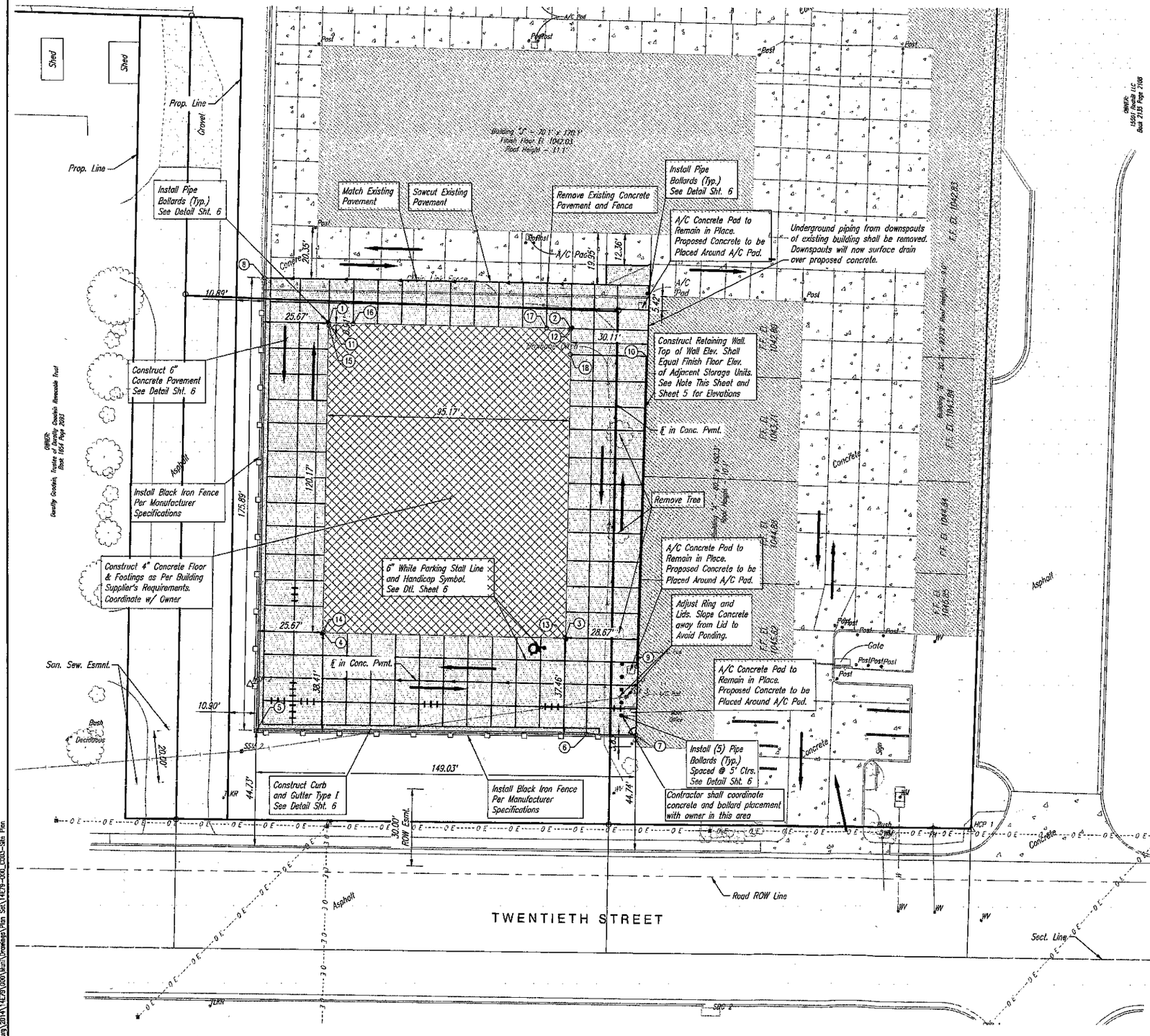

SEE GRADING PLAN SHT. 4

SEE CONCRETE PAVEMENT JOINT LAYOUT PLAN SHT. 5

Retaining Wall shall be designed only after field investigation of existing building footing depth and condition. This may require thickened pavement along the west face of the proposed retaining wall. Contact Engineer with field discovery information.

0 20 40
SCALE: 1" = 20'

PAVING LEGEND

- = PROP. CONCRETE PAVEMENT
- = EX. CONCRETE PAVEMENT
- = PROP. BUILDING ADDITION
- = PROP. CURB AND GUTTER
- = EX. BUILDING
- = EX. GRAVEL SURFACING
- E.J. = EXPANSION JOINT
- L.J. = LONGITUDINAL CONSTRUCTION JOINT
- C.J. = TRANSVERSE CONTRACTION JOINT
- = EX. PAVEMENT JOINT
- TRAFFIC FLOW DIRECTION

Coordinate List

Pt. #	Northing	Easting	Elev.	Desc.
1	329,120.09	2,778,810.40	1042.53	TOP OF PAVEMENT AT BUILDING CORNER
2	329,116.19	2,778,905.55	1042.85	TOP OF PAVEMENT AT BUILDING CORNER
3	328,998.05	2,778,903.15	1044.17	TOP OF PAVEMENT AT BUILDING CORNER
4	328,999.94	2,778,808.01	1044.17	TOP OF PAVEMENT AT BUILDING CORNER
5	328,961.79	2,778,781.58	1043.84	TOP OF CURB
6	328,960.50	2,778,911.36	1045.82	TOP OF CURB
7	328,960.31	2,778,930.59	1045.66	PAVEMENT CORNER
8	329,137.65	2,778,785.08	1041.48	TOP OF CURB
9	328,957.05	2,778,930.96	1045.62	Top of Wall
10	329,107.52	2,778,934.84	1042.80	Top of Wall
11	329,119.99	2,778,810.49	1043.09	Top of Bldg. Slab
12	329,118.10	2,778,905.45	1043.09	Top of Bldg. Slab
13	328,998.14	2,778,903.06	1044.29	Top of Bldg. Slab
14	329,000.03	2,778,808.10	1044.29	Top of Bldg. Slab
15	329,119.18	2,778,810.38	1042.97	Top of Pavement
16	329,119.89	2,778,819.98	1042.97	Top of Pavement
17	329,118.38	2,778,835.97	1042.97	Top of Pavement
18	329,108.11	2,778,905.35	1043.06	Top of Pavement

QUANTITIES

6" Concrete Pavement = 1,575.6 S.Y.
6" Concrete Retaining Wall = 120.5 L.F.
Curb and Gutter = 309.1 L.F.
Black Iron Fence = 320.9 L.F.

BUILDING USE	
DESCRIPTION OF USE	PERCENTAGE OF USE
STORAGE	*100%*

MATTHEW BILLINGSLEA NUMBER PE-2007006509 01/31/2018 PROFESSIONAL ENGINEER

COUNTRYSIDE SELF STORAGE

SITE PLAN

PHASE V 2018 BUILDING IMPROVEMENTS – MAIDEN LANE STORAGE

PEC PROFESSIONAL ENGINEERING CONSULTANTS, P.A.
104 SOUTH PINE PITTSBURG, KS 66762
620-235-0195 www.pec1.com

Designed by	JPD	Date	1-31-2018	Sht 3 of 10
Drawn by	ORB/BFS	Job No.	335-14E79-5956	

Saved 01-31-2018 9:35:58 AM by BFS
Plot Scale 1:1 01-31-2018 11:05:12 AM by BRANDON SEIBERT
O:\Pittsburg\2018\14E29\000\Main\Drawings\Plan Set\14E79-000_C003-Site Plan

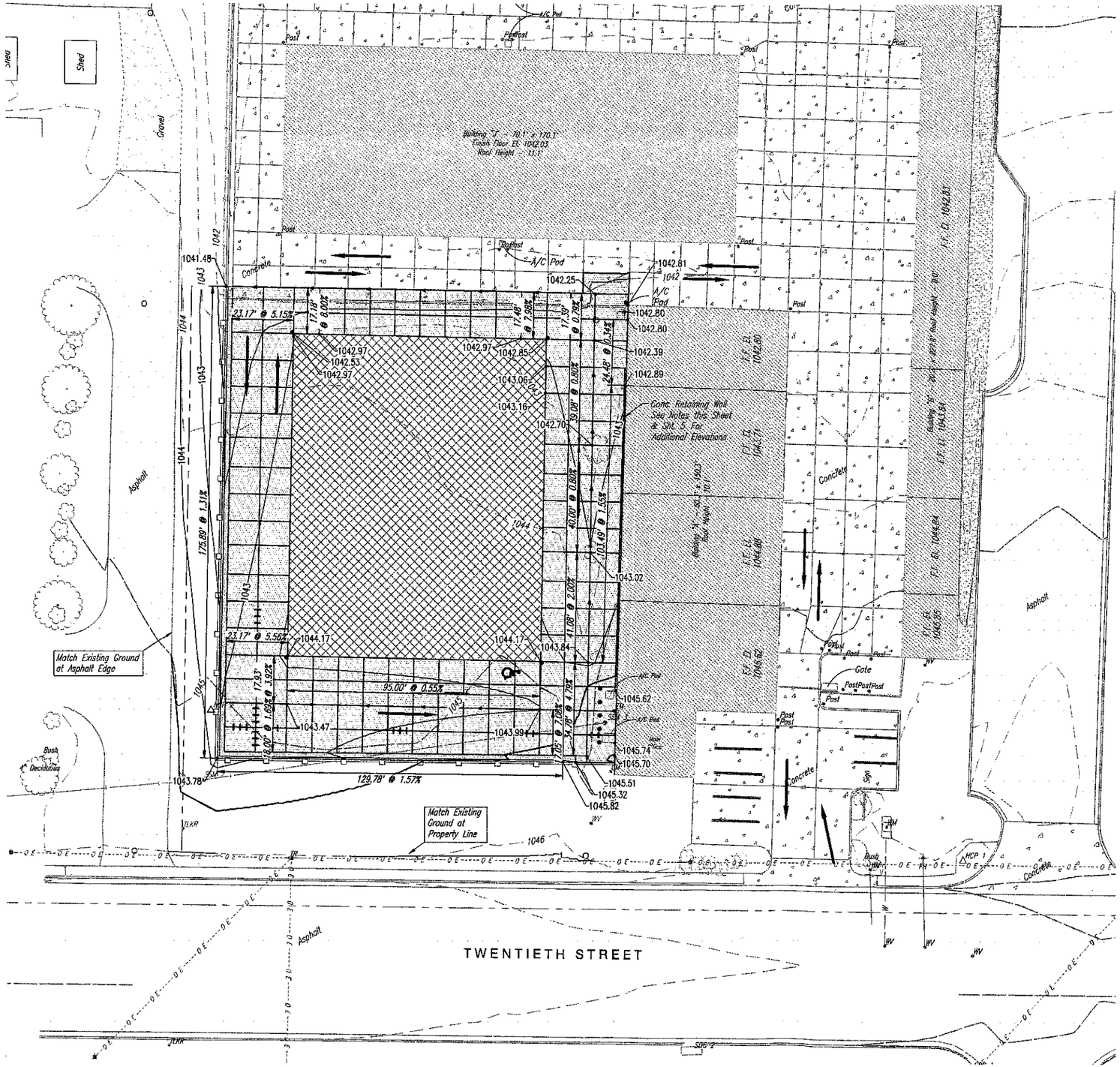

SEE CONCRETE PAVEMENT JOINT LAYOUT PLAN FOR DETAIL ELEVATIONS AND JOINT DIMENSIONS SHT. 5

MATCH TOP OF CONCRETE ELEVATION AT ALL CONCRETE A/C PADS

TOP OF CONC. RETAINING WALL ELEVATION SHALL MATCH FIN. FLOOR ELEVATIONS OF ADJACENT BUILDING "A"

Retaining Wall shall be designed only after field investigation of existing building footing depth and condition. This may require thickened pavement along the west face of the proposed retaining wall. Contact Engineer with field discovery information.

0 20 40
SCALE: 1" = 20'

PAVING LEGEND

- = PROP. CONCRETE PAVEMENT
- = EX. CONCRETE PAVEMENT
- = PROP. BUILDING ADDITION
- = PROP. CURB AND GUTTER
- = EX. BUILDING
- = EX. GRAVEL SURFACING
- E.J. = EXPANSION JOINT
- L.J. = LONGITUDINAL CONSTRUCTION JOINT
- C.J. = TRANSVERSE CONTRACTION JOINT
- = EX. PAVEMENT JOINT
- TRAFFIC FLOW DIRECTION

STATE OF MISSOURI
MATTHEW BILLINGSLEA
NUMBER PE-2007006009
01/31/2018
PROFESSIONAL ENGINEER

COUNTRYSIDE SELF STORAGE

GRADING PLAN

PHASE V 2018 BUILDING IMPROVEMENTS - MAIDEN LANE STORAGE

PEC
PROFESSIONAL ENGINEERING CONSULTANTS, P.A.
104 SOUTH PINE PITTSBURG, KS 66762
620-235-0195 www.pec1.com

Designed by	JPD	Date 1-31-2018	Sht 4 of 10
Drawn by	DRB/BFS	Job No. 335-14E79-5956	

Saved 01-31-2018 10:59:15 AM by BFS
Plot Scale 1:1 01-31-2018 11:00:29 AM by BRANDON SEWERT
U:\Pittsburg\2014\14E79\000\Muni\Drawings\Plan Set\14E79-000_C004-Grading Plan

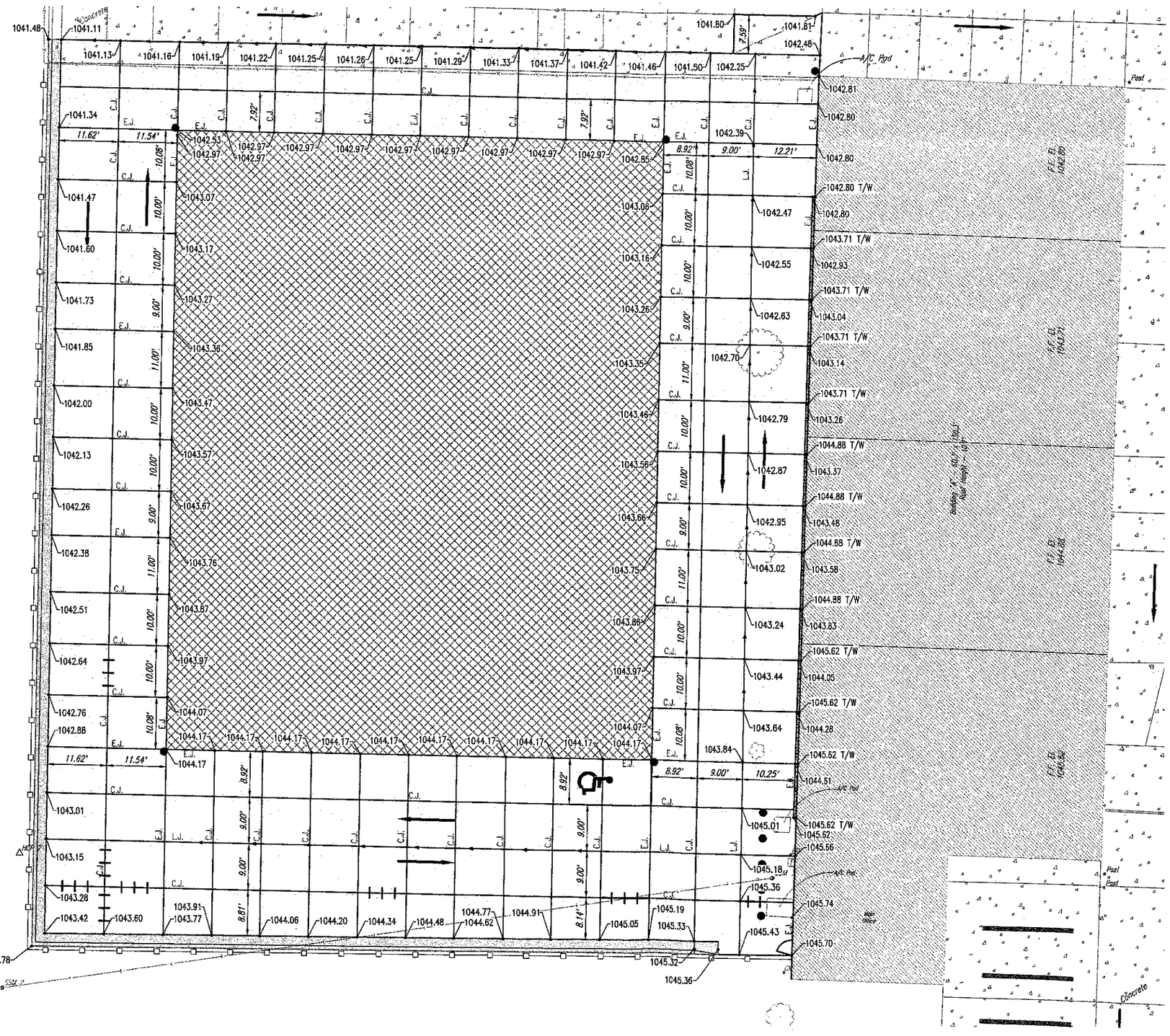

PAVING LEGEND

- = PROP. CONCRETE PAVEMENT
- = EX. CONCRETE PAVEMENT
- = PROP. BUILDING ADDITION
- = PROP. CURB AND GUTTER
- = EX. BUILDING
- = EX. GRAVEL SURFACING
- E.J. = EXPANSION JOINT
- L.J. = LONGITUDINAL CONSTRUCTION JOINT
- C.J. = TRANSVERSE CONTRACTION JOINT
- = EX. PAVEMENT JOINT
- TRAFFIC FLOW DIRECTION

STATE OF KANSAS
MATTHEW BILLINGSLEA
NUMBER
PE-2007005009
01/31/2018
PROFESSIONAL ENGINEER

COUNTRYSIDE SELF STORAGE

CONCRETE PAVEMENT JOINT LAYOUT PLAN

PHASE V 2018 BUILDING IMPROVEMENTS – MAIDEN LANE STORAGE

PEC
PROFESSIONAL ENGINEERING CONSULTANTS, P.A.
104 SOUTH PINE PITTSBURG, KS 66762
620-235-0195 www.pec1.com

Designed by	JPD	Date 1-31-2018	Sht 5 of 10
Drawn by	DRB/BFS	Job No. 335-14E79-5956	

Saved 01-31-2018, 10:28:08 AM by RPS
Plot Scale 1:1 01-31-2018 11:00:45 AM by BRANDON SCHMIDT
J:\Pittsburg\2014\14E79 (JDP)\Main Drawings\Plan Set\14E79-000_C005-Joint Layout Plan

Note:
Concrete For Pavement Shall Contain GRT Polymesh™ or Approved Equal At a Rate Of 1.5 Pounds Per Cubic Yard. Concrete Shall Attain A Minimum Strength Of 4,000 psi At 28 Days.

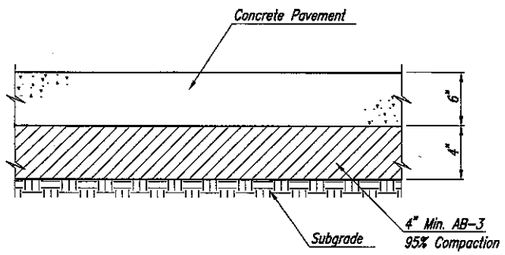

6" CONCRETE PAVEMENT SECTION

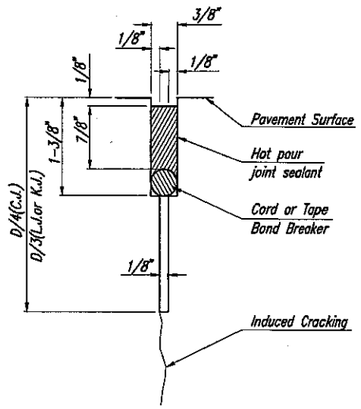

DETAIL A

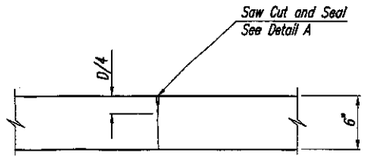

TRANSVERSE CONTRACTION JOINT DETAIL
UNREINFORCED PAVEMENT
(C.J.)

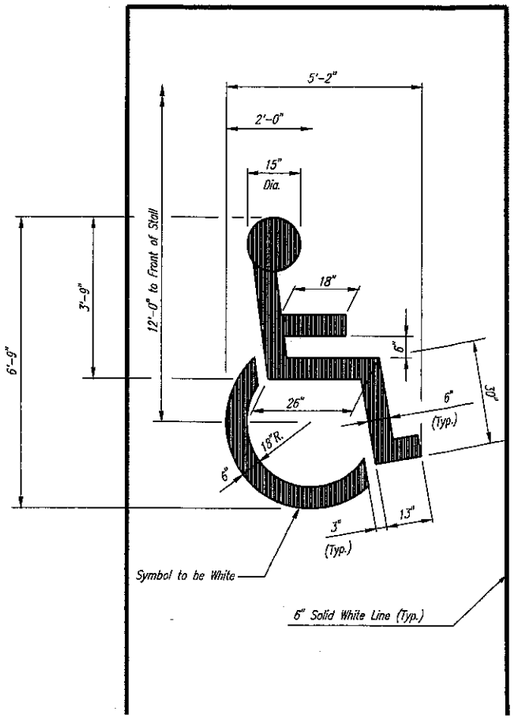

HANDICAP MARKING DETAILS

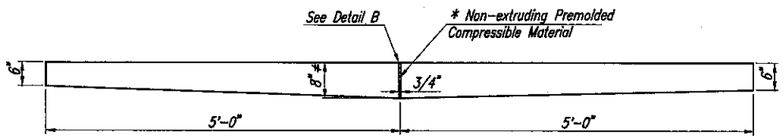

* Additional thickness shall be subsidiary. Expansion joint material shall extend through combined curb and gutter sections.

EXPANSION JOINT DETAIL
UNREINFORCED PAVEMENT
(E.J.)

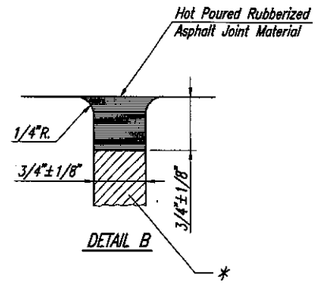

DETAIL B

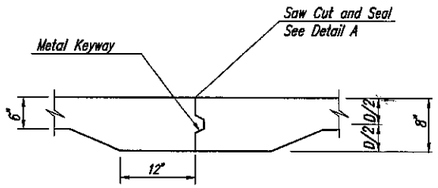

LONGITUDINAL CONSTRUCTION JOINT DETAIL
UNREINFORCED PAVEMENT
(TRANSVERSE SECTION)
(L.J.)

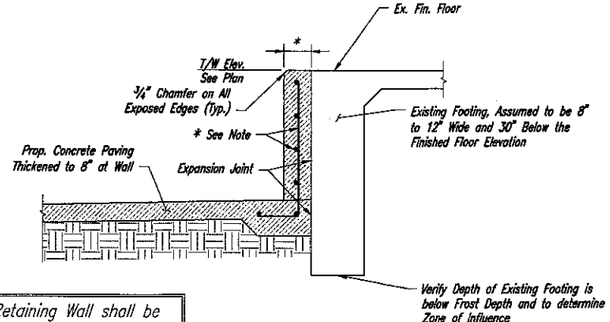

* Retaining Wall shall be designed only after field investigation of existing building footing depth and condition. This may require thickened pavement along the west face of the proposed retaining wall. Contact Engineer with field discovery information.

SECTION - RETAINING WALL
SCALE: 3/4" = 1'-0"



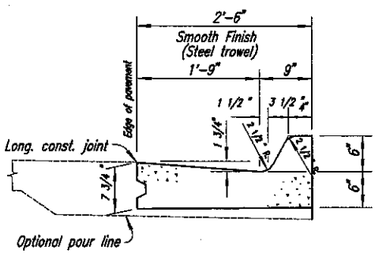

TYPICAL SECTION
COMBINED CURB & GUTTER - TYPE I (2'-6" WIDTH)

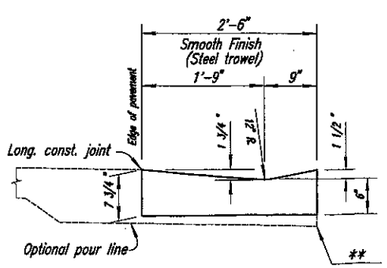

TYPICAL SECTION
COMBINED CURB & GUTTER - TYPE II (2'-6" WIDTH)

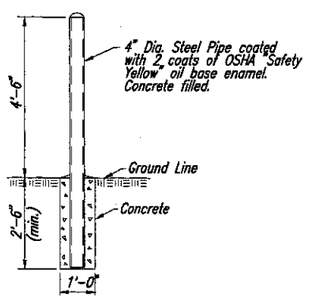

PIPE BOLLARD DETAIL

COUNTRYSIDE SELF STORAGE

MISCELLANEOUS DETAILS

PHASE V 2018 BUILDING IMPROVEMENTS - MAIDEN LANE STORAGE

PEC
PROFESSIONAL ENGINEERING CONSULTANTS, P.A.
104 SOUTH PINE PITTSBURG, KS 66762
620-235-0195 www.pec1.com

Designed by	JPD	Date	1-31-2018	Sht 6 of 10
Drawn by	DRB/BFS	Job No.	335-14E79-5956	

Saved 01-30-2018 8:52:00 PM by JASON.DICKMAN
Plot Scale 1:1 01-31-2018 11:10:53 AM by JASON.DICKMAN
I:\Projects\2014\14-079\335-14E79-005_CC06 Misc Dtls\Drawings\Sht Sets\14E79-005_CC06 Misc Dtls.dwg

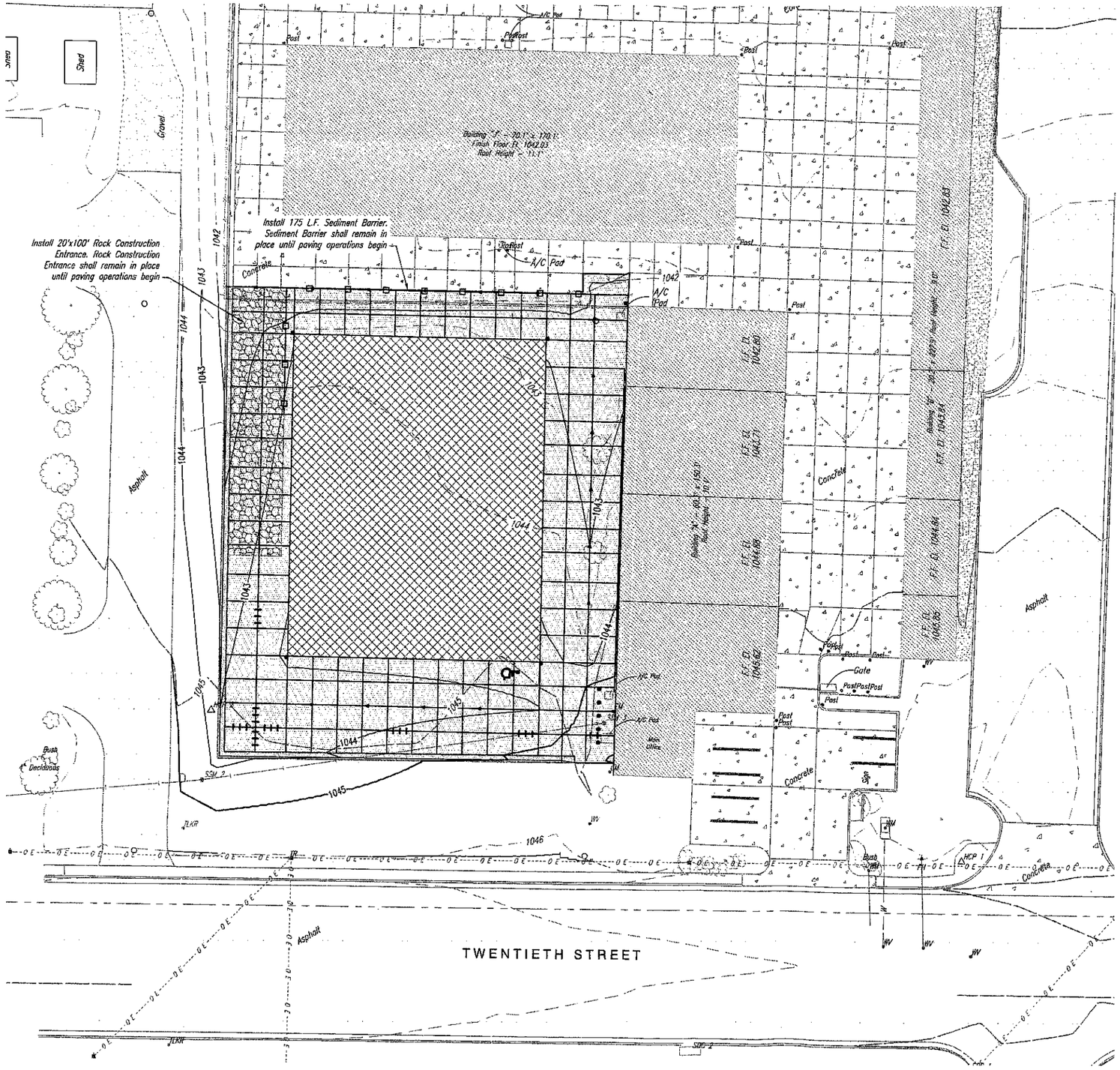

0 20 40

SCALE: 1" = 20'

LEGEND

- Proposed Sediment Barrier
- 1045 Proposed Major Contour
- 1044 Proposed Minor Contour
- ELEV Existing Contour

GENERAL NOTES:

1. THE EROSION CONTROL DEVICES SHOWN ON THIS SITE ARE CONSIDERED MINIMUM STANDARDS. WHENEVER SEDIMENT ENTERS THE STREETS, STORM SEWERS, DITCHES, OR PONDS, CONTRACTOR WILL INSTALL ADDITIONAL DEVICES, AS NEEDED, TO CORRECT THE PROBLEM.
2. THE EROSION CONTROL DEVICES SHOWN HEREON MUST BE IN PLACE AT ALL TIMES DURING CONSTRUCTION UNTIL SUCH TIME AS THE SITE IS REESTABLISHED WITH PAVING OR GRASS. TEMPORARY OR PERMANENT SEED AND MULCH WILL BE INSTALLED IMMEDIATELY WHEN EARTHWORK ACTIVITIES CEASE IN AN AREA FOR 14 DAYS OR MORE.
3. ANY MUD INADVERTENTLY TRACKED ONTO ANY STREET WILL BE CLEANED UP BY THE CONTRACTOR AT THE END OF EACH DAY'S WORK.
4. EROSION CONTROL BLANKETS SHALL BE INSTALLED ON ALL DITCH SLOPES THAT GET DISTURBED. USE CLASS 1 ON SLOPES THAT ARE <=3:1. USE CLASS 2 ON ALL SLOPES THAT ARE >3:1

MATTHEW BILLINGSLEA NUMBER PE-2007000609 01/31/2018 PROFESSIONAL ENGINEER

COUNTRYSIDE SELF STORAGE

EROSION CONTROL PLAN

PHASE V 2018 BUILDING IMPROVEMENTS – MAIDEN LANE STORAGE

PEC
PROFESSIONAL ENGINEERING CONSULTANTS, P.A.
104 SOUTH PINE PITTSBURG, KS 66762
620-235-0195 www.pec1.com

Designed by	JPD	Date	1-31-2018
Drawn by	DRB/BFS	Job No.	335-14E79-5956

Sht 7 of 10

Saved 01-31-2018 9:58:09 AM by BFS
Plot Scale 1:1 01-31-2018 11:01:01 AM by BRANDON_SEWELL
U:\Pittsburg\2014\14E79\000\Main\Drawings\Plan Sets\14E79-000_C007_Erosion Control Plan

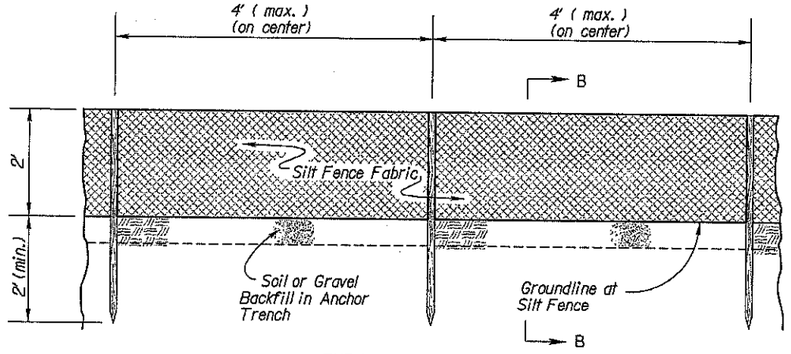

TYPICAL ELEVATION

SILT FENCE SLOPE BARRIER

NO SCALE

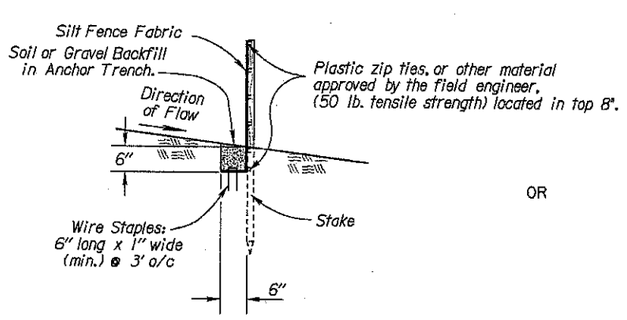

SECTION B-B

OR

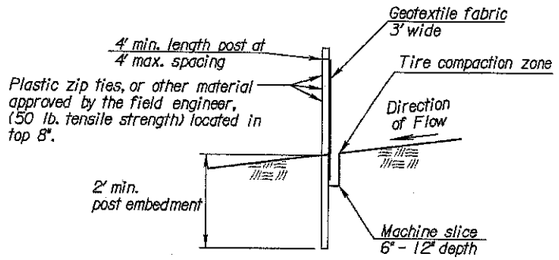

SECTION B-B

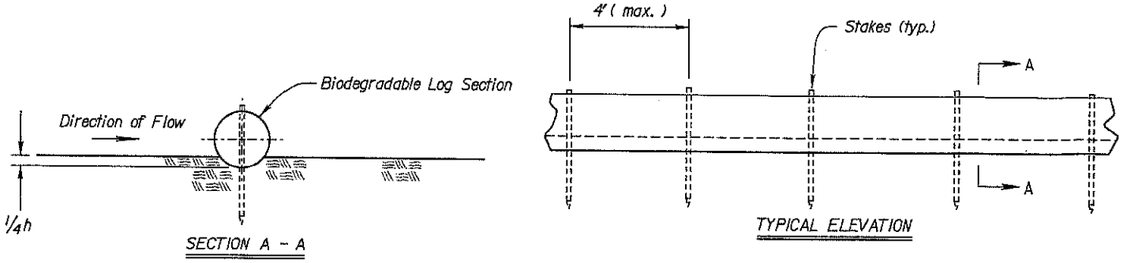

SECTION A - A

TYPICAL ELEVATION

BIODEGRADABLE LOG SLOPE BARRIER

NO SCALE

INSTALLATION NOTES

SILT FENCE:

1. Stakes shall be 4' (min.) long and of one of the following materials:
   a. Hardwood - 1 3/16" x 1 3/16";
   b. Southern Pine (No. 2) - 2 5/8" x 2 5/8";
   c. Steel U, T, L, or C Section - .95 lbs. per 1'-0"; or
   d. Synthetic - same strength as wood stakes.
2. Cross pieces shall be of same material as stakes.
3. Attach fence fabric securely on 6" centers (max.).
4. Use of high flow material is acceptable.
5. Refer to plan sheets to estimate the length of silt fence required.

BIODEGRADABLE LOG BARRIERS

1. Place biodegradable logs tightly together.
2. Wood stakes shall be 2" x 2" (nom.).
3. Wire staples shall be 6" long x 1" wide (min.) and placed on 4' (max.) centers.
4. Refer to plan sheets to estimate length of biodegradable log barriers required.
5. Logs should be keyed into the ground at a minimum of 25% of its height.
6. Length of stakes should be 2 times the height of the log at a minimum.

Biodegradable Logs, Straw Wattles & Sediment Logs

		PRODUCT		
		9" Sediment Log & 9" Straw Wattle (ft)	12" Sediment Log & 12" Straw Wattle (ft)	20" Sediment Log & 20" Straw Wattle (ft)
Slope Gradient	≤4H:1V	40	60	80
	3H:1V	30	45	60
	2H:1V	20	30	40
	1H:1V	10	15	20

9" and 12" material should only be used in areas which have been seeded and mulched. 20" material should be used in all other areas. Deviations should be approved by the Field Engineer.

BIODEGRADABLE LOG MATERIAL		
	LOW FLOW	HIGH FLOW
9"	Straw/Compost	Excelsior / Wood Chips / Coconut Fiber
12"	Straw/Compost	Excelsior / Wood Chips / Coconut Fiber
18"-20"	Straw/Compost	Excelsior / Wood Chips / Coconut Fiber

GENERAL NOTES

1) The slope barriers shall be placed along contour lines, with a short section turned upgrade at each end of the barrier. The maximum length of the slope barrier shall not exceed 250 feet, and the barrier ends need to be staggered.
2) At culverts, the Silt Fence shall be placed over the culvert, not through the streambed flowline.
3) Barriers damaged by Contractor's negligence, including improper maintenance or lack of maintenance, shall be repaired immediately by Contractor at no additional cost to KDOT.
4) Agricultural products, such as native prairie hay, used for mulching and erosion control practices, excluding wood based mulch, shall meet the North American Weed Free Forage Standards.

STATE OF KANSAS
MATTHEW BILLINGSLEA
NUMBER PE-2007006009
01/31/2018
PROFESSIONAL ENGINEER

COUNTRYSIDE SELF STORAGE

SEDIMENT BARRIER DETAILS

PHASE V 2018 BUILDING IMPROVEMENTS - MAIDEN LANE STORAGE

PEC
PROFESSIONAL ENGINEERING CONSULTANTS, P.A.
104 SOUTH PINE PITTSBURG, KS 66762
620-235-0195 www.pec1.com

Designed by	JPD	Date	1-31-2018
Drawn by	DRB/BFS	Job No.	335-14E79-5956

Sht 8 of 10

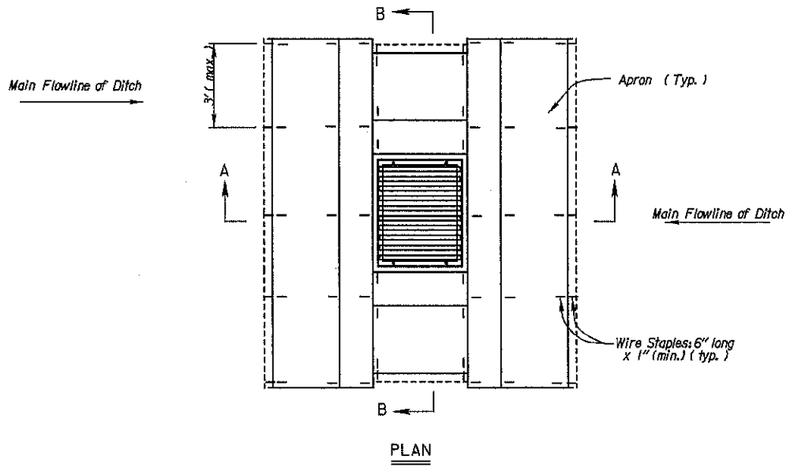

PLAN

TEMPORARY INLET SEDIMENT BARRIER
(TRIANGULAR SILT DIKE METHOD)

NO SCALE

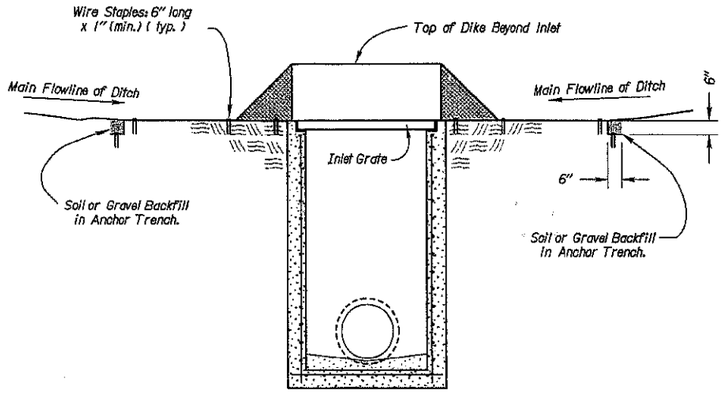

SECTION A - A

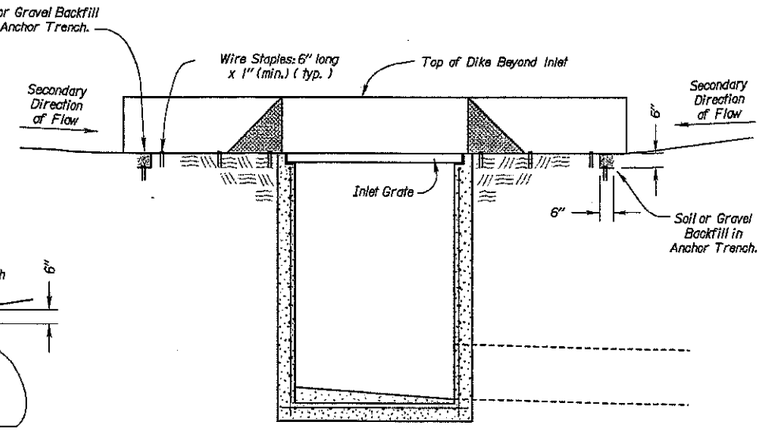

SECTION B - B

PLAN

SECTION C - C

TEMPORARY INLET SEDIMENT BARRIER
(SILT FENCE METHOD)

NO SCALE

SILT FENCE:

1. Stakes shall be 4' (min.) long and of one of the following materials:
   a. Hardwood - 1 3/16" x 1 3/16";
   b. Southern Pine (No. 2) - 2 5/8" x 2 5/8";
   c. Steel U, T, L, or C Section - .95 lbs. per 1'-0"; or
   d. Synthetic - same strength as wood stakes.
2. Cross pieces shall be of same material as stakes.
3. Attach fence fabric securely on 6" centers (max).
4. Use of high flow material is acceptable.
5. Refer to plan sheets to estimate the length of silt fence required.

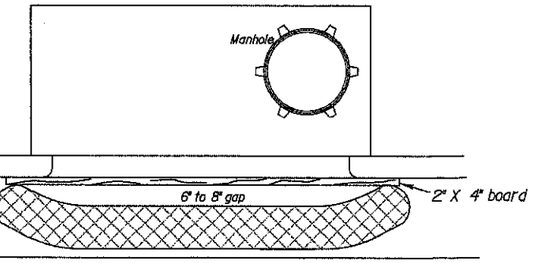

CURB INLET PROTECTION

1. If multiple gravel bags are required, place them in such a way that no gaps are evident.
2. Height of bags (8" minimum diameter) must not be above top of curb.
3. Alternative products may be used other than gravel bags such as the "Gutter Buddy". Products must be approved by the Engineer.
4. Curb inlet protection will be measured and paid for as Filter Sock.

Bags = synthetic net (3mm mesh) or burlap bags

Rock = approximately 1" to 2" diameter

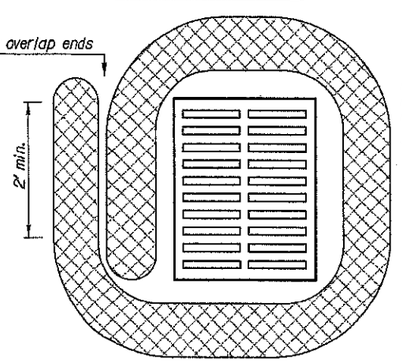

Drop inlet use
1'-6" TO 1'-8" diameter log

Note: 25% of log shall be keyed into ground during installation.

Stake every 4'

BIODEGRADABLE LOG/FILTER SOCK
DROP INLET PROTECTION

Material Requirements
Use 100% shredded mulch or other non-compost biodegradable material as fill for logs.
No compost or fines.
No hay or straw.
Do not use material which prohibits water infiltration.
Log Mesh: Use mesh with 1/4" openings or larger. Mesh must allow water infiltration but also hold fill material in place.

STATE OF KANSAS
MATTHEW BILLINGSLEA
NUMBER PE-2007006009
01/31/2018
PROFESSIONAL ENGINEER

COUNTRYSIDE SELF STORAGE

INLET PROTECTION DETAILS

PHASE V 2018 BUILDING IMPROVEMENTS - MAIDEN LANE STORAGE

PEC
PROFESSIONAL ENGINEERING CONSULTANTS, P.A.
104 SOUTH PINE PITTSBURG, KS 66762
620-235-0195 www.pec1.com

Designed by	JPD	Date	1-31-2018	Sht 9 of 10
Drawn by	DRB/BFS	Job No.	335-14E79-5856	

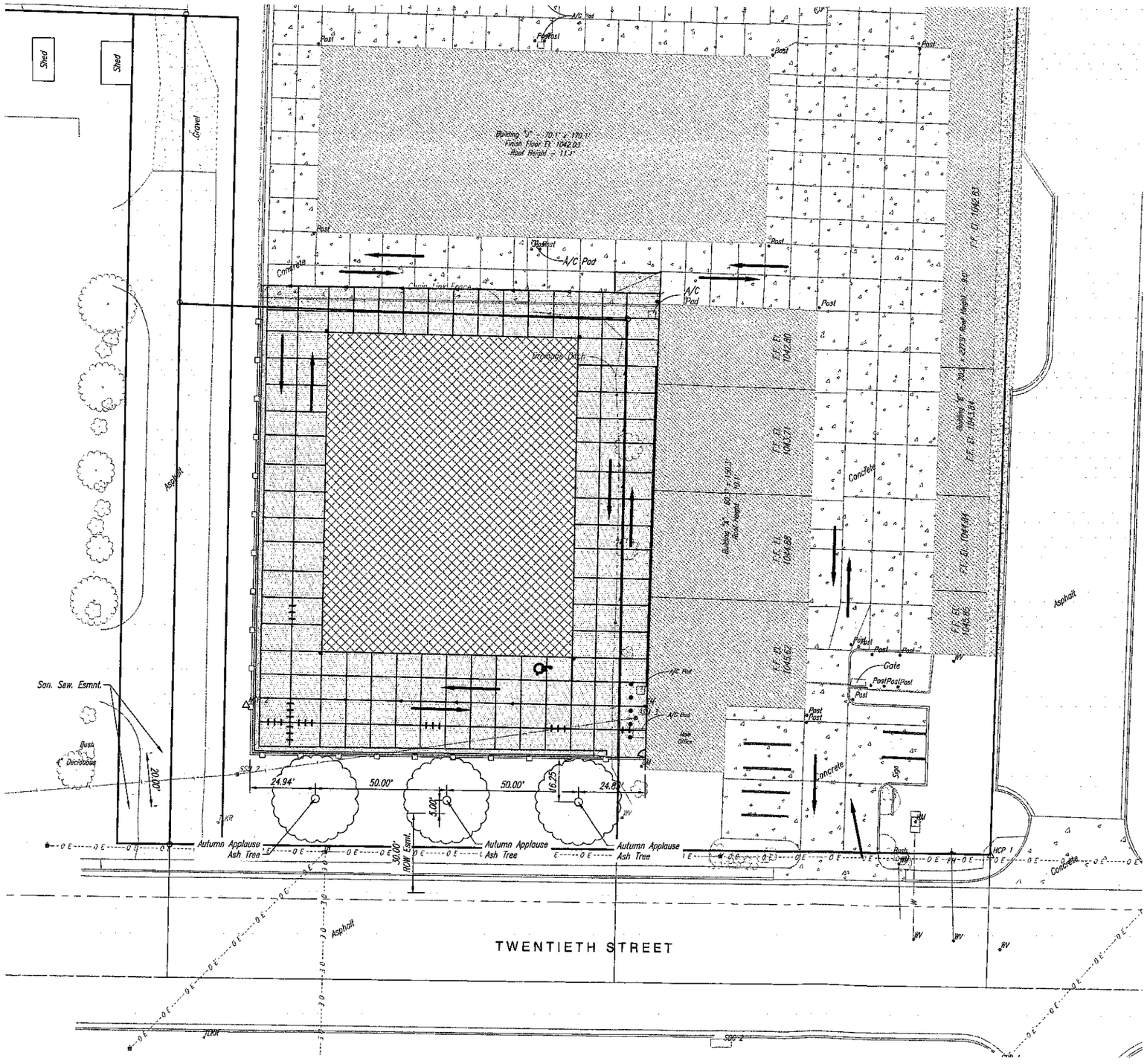

0 20 40

SCALE: 1" = 20'

PAVING LEGEND

- = PROP. CONCRETE PAVEMENT
- = EX. CONCRETE PAVEMENT
- = PROP. BUILDING ADDITION
- = PROP. CURB AND GUTTER
- = EX. BUILDING
- = EX. GRAVEL SURFACING
- E.J. = EXPANSION JOINT
- L.J. = LONGITUDINAL CONSTRUCTION JOINT
- C.J. = TRANSVERSE CONTRACTION JOINT
- = EX. PAVEMENT JOINT
- TRAFFIC FLOW DIRECTION

COUNTRYSIDE SELF STORAGE

LANDSCAPE PLAN

PHASE V 2018 BUILDING IMPROVEMENTS – MAIDEN LANE STORAGE

PEC
PROFESSIONAL ENGINEERING CONSULTANTS, P.A.
104 SOUTH PINE PITTSBURG, KS 66762
620-235-0195 www.pec1.com

Designed by	JPD	Date	1-31-2018
Drawn by	DRB/BFS	Job No.	335-14E78-5955

Sht 10 of 10

Saved 01-25-2018 10:23:18 AM by BFS
Plot Scale 1:1 01-31-2018 11:01:29 AM by BRANDON_SEWERT
U:\Pittsburg\2014\14E78-0000\Main\Drawings\Plan Set\14E78-000-0022-Landscape Plan

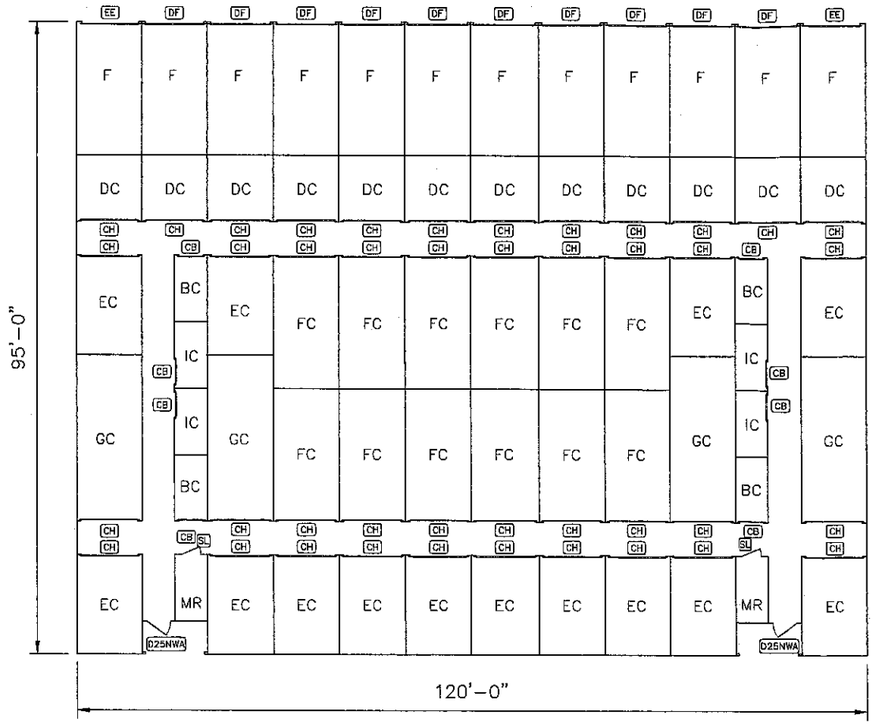

A – 95' x 120' x 9'–4" 1/2:12 PITCH GABLE BUILDING SYSTEM w/CENTER RIDGE CAP.

North

UNIT MIX

LABEL	UNIT SIZE	# UNITS	%	SQ. FEET	INSULATED
BC	5 x 10	4	6.3	200	Y
MEC	5 x 10M	2	3.1	100	N
IC	10 x 5	4	6.3	200	Y
DC	10 x 10	12	18.8	1200	Y
EC	10 x 15	14	21.9	2100	Y
F	10 x 20	12	18.8	2400	N
FC	10 x 20	12	18.8	2400	Y
GC	10 x 25	4	6.3	1000	Y
	SQ.FT. NON–INSULATED			2500	
	SQ.FT. INSULATED			7100	
	TOTAL	64	100	9600	

DOOR SCHEDULE

QTY	CODE	TYPE	SIZE	ROUGH OPENING (REF.)	MANUF.	DESCRIPTION	COLOR
8	CB	ROLL–UP	3'–8" x 7'–0"	3'–8" x 7'–0"	TRAC–RITE/eq.	CORRIDOR ROLL–UP DOOR	COLORED
42	CH	ROLL–UP	8'–8" x 7'–0"	8'–8" x 7'–0"	TRAC–RITE/eq.	CORRIDOR ROLL–UP DOOR	COLORED
2	D25NWA	SWING A	3'–8" x 6'–8"	4'–0" x 7'–0"	PDL/equiv	DOOR,LEVER/PANIC,30x30 LITE,CLOSER,ADA–Compliant	White
10	DF	ROLL–UP	9'–0" x 7'–0"	9'–0" x 7'–0"	TRAC–RITE/eq.	ROLL–UP DOOR	COLORED
2	EE	ROLL–UP	8'–8" x 8'–0"	8'–8" x 8'–0"	TRAC–RITE/eq.	ROLL–UP DOOR	COLORED
2	SL	SWING	3'–0" x 7'–0"	3'–0" x 7'–0"	TRACHTE	FLUSH PANEL LOUVERED SWING DOOR	COLORED

ROLL–UP DOORS MEET ASTM E330

PDL DOORS – PRIMER COAT ONLY

** THE ABOVE PLAN MAY NOT REFLECT THE IMPLICATIONS OF SECTION 903.2.9 OF THE 2012 OR 2015 IBC CODE WHICH MAY REQUIRE 3 HOUR FIREWALLS EVERY 2,500 SQFT OR MAY REQUIRE YOU TO SPRINKLE THE BUILDING.

*** TRACHTE RECOMMENDS (IN USA ONLY) THAT ALL PROJECTS REQUIRE A NUMBER OF UNITS BE ADA ACCESSIBLE, IF A CUSTOMER CHOOSES TO NOT CONFORM TRACHTE WILL NOT BE HELD ACCOUNTABLE.

"NOTICE"

NO FABRICATION CAN BE SCHEDULED OR BEGUN UNTIL "APPROVED" OR "APPROVED AS NOTED" DOCUMENTS ARE RECEIVED BY TRACHTE BUILDING SYSTEMS.

COMPLETE THE FOLLOWING:

____ APPROVED – RELEASE FOR FABRICATION

____ APPROVED AS NOTED – RELEASE FOR FABRICATION

____ NOT APPROVED – REVISE AND RESUBMIT

SIGNATURE _____

COMPANY _____

DATE ____/____/____

TRACHTE BUILDING SYSTEMS, Inc.

This drawing and all parts thereof is the exclusive property of Trachte Building Systems, Inc. 314 Wilburn Road, Sun Prairie, Wisconsin (800/356–5824) (Local 608/837–7899) and may not be reproduced in whole or part without written permission.

Revisions:	By:
11/27/17–UNIT MIX PER CUST. REQUEST.	J.B.
1/16/18–UNIT MIX REVISION PER CUST. REQUEST.	J.B.

Name: Jeff | Scale: 1 = 30' | Date: 11/13/17

Job Description: 1

PROPOSED STORAGE SYSTEM FOR: CURTIS FRAZIER

JOPLIN, MO

Sheet Title: FLOOR PLAN

Plan #: 41975–F

SALES ONLY