Section 1 - Project Information

Project:

Joplin Public Library
Furniture Bid Package
1901 E. 20th Street
Joplin, Missouri 64801

Designer/Specifier:

OPN Architects, Inc.
Contact: Mindy Sorg
200 Fifth Avenue SE, Suite 201
Cedar Rapids, Iowa 52401
Phone: 319.363.6018
Email: msorg@opnarchitects.com

User:

Joplin Public Library
Contact: Jacque Gage
Phone: 417-623-7953
Email: jgage@joplinpubliclibrary.org

Owners Representative:

CBC Real Estate Group, LLC
Contact: Michelle Kaiser
Address: 4706 Broadway, Suite 240 | Kansas City, Missouri 64112
Phone: 816-285-9558 | 913-233-6611
Email: mkaiser@cbcrealestategroup.com

Owner:

The City of Joplin
Attention: Tony W. Robyn
602 S Main St,
4th Floor Planning
Joplin, Missouri 64801
Phone: 417-624-0820 x541

End of Project Information Section

Section 2 – Instructions to Bidders

A. Three (3) copies of the Bids shall be provided on the form(s) attached, shall be signed by the principal of vendor, and shall be sealed in an envelope and marked:

EDA #: 05-79-05345
Joplin Public Library
Furniture Bid Package

Three (3) copies of the Bid must be submitted with EDA# identified on outside of envelope by 11 am on March 8, 2017.

(2) Bids are to be received by:
City of Joplin
Attention: Tony W. Robyn
1901 E. 20th Street
4th Floor Planning
Joplin, Missouri 64801

(1) Bid to be received by:
OPN Architects
Mindy Sorg
200 5th Avenue SE Suite 201
Cedar Rapids, Iowa 52401

B. Bidders shall carefully read the General Conditions and Supplemental Conditions. In submitting bids, bidders agree to the General Conditions and Supplemental Conditions without exception, and agree that these Conditions form a part thereof.

C. The City of Joplin will make awards on the basis of low and/or qualified bid for each section, but this does not exclude several sections being awarded to one bidder. Bidders should complete the section on which they are bidding in its entirety, including total price, freight, delivery and installation. The City of Joplin will make the award deemed to be in its best interest. All items, within vendor package, must be bid in order for the bid to be considered.

D. Bidders shall submit bids on items exactly as specified. Whenever a material, article, or piece of equipment is identified in the Specification Documents by reference to manufacturers' or vendors' names, trade names, catalogue numbers, etc., it is intended merely to establish a standard. Any material, article, or equipment of other manufacturers and vendors that will perform adequately the duties imposed by the design intent will be considered equally acceptable provided the material, article, or equipment so proposed is, in the opinion of the Designer/Specifier, of equal substance and function. Bidders shall submit a completed Alternate Form will each Alternate to be considered. However, such substitution material, article, or equipment shall not be purchased or installed by the Vendor without the Designer/Owners Representative written approval through completion of the Product Evaluation Criteria Form.

E. Bidders shall NOT contact the City of Joplin or Joplin Public Library. All questions to be submitted via email to OPN Architects, Mindy Sorg msorg@opnarchitects.com. All questions submitted will be answered via Addendum.

F. Final Bids shall be reviewed by the City and OPN Architects at a public bid opening on 11 am on March 8, 2017. Final Bids and Vendor selections will be posted at a later date on the Joplin city website.

G. Lump sum totals for each section of the Bid shall be indicated in accordance with the Proposal for Furniture letter format included in Section 5. Bidders must also include an itemized price list showing each product with unit prices, discounts, and extensions as indicated on the Furniture Bid Form.

H. All prices must be Freight on Board (F.O.B.) to the identified job delivery site.

I. In the event of delay of delivery of furniture, and if storage is required, the Owner will pay 50% of invoice value of furniture, not including installation costs, when proof of arrival, Vendor's inspection, storage and certificates of storage have been delivered to Owner.

J. The Owner reserves the right to accept or reject any or all quotes, to waive irregularities or technicalities in any quote, and to accept any quote which the Owner deems to be in its best interest.

K. The Owner will make awards on the basis of low and qualified bid. The City of Joplin will make the award deemed in its best interest. All items to be included in the proposal must be included for the bid to be considered.

L. Upon award of the contract, the selected Vendor shall provide insurance certificate to the Owner of complete and current liability insurance to cover all materials and equipment, Vendor's employees while on the job site, and damages to Owner's properties during delivery, installation and clean-up. The Insurance coverage shall be subject to approval of the Owner, as to adequacy of protection. In the event that the owner requires additional coverage, the Vendor shall be reimbursed, by owner, for the cost of additional coverage required for this package.

M. The Owner reserves the right to order additional specified items for this project at the originally quoted prices for a period of (120) days after the final furniture installation date.

End of Instructions to Bidders Section

Joplin Public Library

FURNITURE SPECIFICATIONS

Joplin Public Library

OPN PROJECT NO: 14289000
EDA PROJECT NO: 05-79-05345
JOPLIN, MISSOURI
ISSUE DATE: 01/27/17 - SECTIONS TO REBID



OPN ARCHITECTS

SDA ARCHITECTS

Joplin Public Library

End Panels + Canopy Tops

OPN ARCHITECTS

Joplin Public Library

CT
ITEM CODE

Joplin Public Library

PROJECT NO: 14289000
JOPLIN, MISSOURI
ISSUE DATE: 02/15/2017

Canopy Tops

ITEM INFORMATION:

Type Mark	Count	Length	Width	Location
CT-1	8	108"	22.5"	Lobby Shelving
CT-2	2	Custom Curve	Custom Curve	Children's Collection - Family Place
CT-3	3	Custom Curve	Custom Curve	Children's Collection - Juvenile

General Notes:

1. Canopy top lengths and widths are general. Coordinate "fit" of canopy tops with selected shelving manufacturer.

2. All canopy tops shall be laminate, Nevamar Chalk White or Equal, with a PVC edge banding.

OPN ARCHITECTS

Joplin Public Library

EP
ITEM CODE

Joplin Public Library

PROJECT NO: 14289000
JOPLIN, MISSOURI
ISSUE DATE: 02/15/2017

End Panels

ITEM INFORMATION:

Type Mark	Count	Height	Width	Location
EP-1	8	50"	34"	Children's Early Learners
EP-2	38	50"	22.5"	Children's Audio/DVD, Children's Easy Readers, Children's Curved Shelving, Lobby Mobile Shelving, Print Reference
EP-3	30	62"	22.5"	Children's Juvenile
EP-4	3	50"	26.5"	Children's Curved Shelving
EP-5	114	68"	22.5"	Local History, Adult Large Print, Adult Fiction, Post, Adult Audio, Teen, Adult DVD
EP-6	40	68"	26.5"	Periodical Shelving, Adult Non-Fiction
EP-7	6	68"	12.5"	SF Newspaper Display, SF Adult Fiction
EP-8	4	68"	14.5"	SF Adult Non-Fiction

General Notes:

1. End panel heights and widths are general. Coordinate "fit" of end panels with selected shelving manufacturer for specific measurements on end panels.

2. Contractor shall submit a full scale mockup of an end panel for designer approval. Contractor shall coordinate with the shelving manufacturer to get associated shelving end channel pieces in order to show accurate installation.

OPN ARCHITECTS

Joplin Public Library

End Panels 1 Elevations

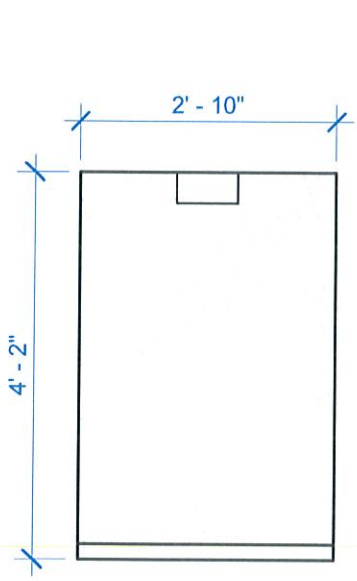

EP-1

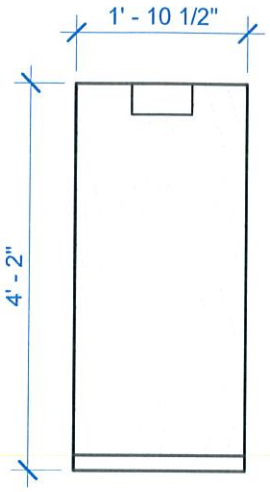

EP-2

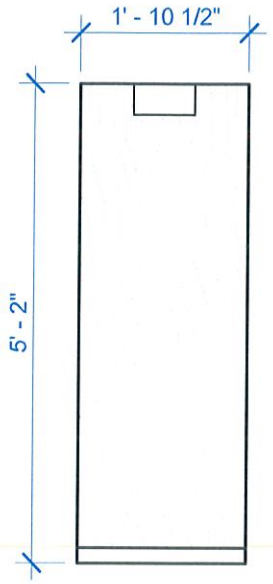

EP-3

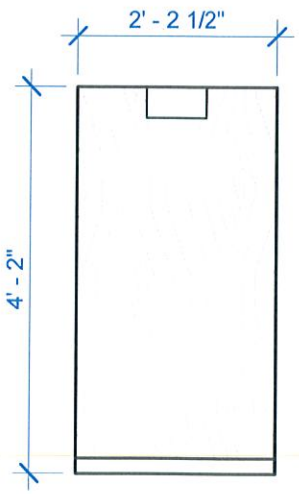

EP-4

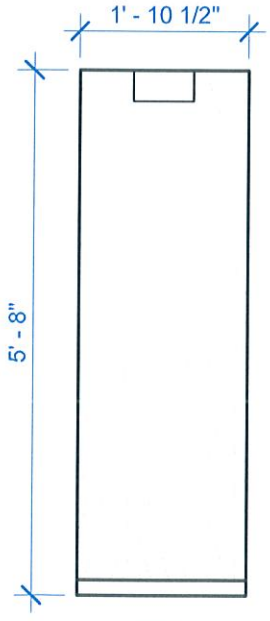

EP-5

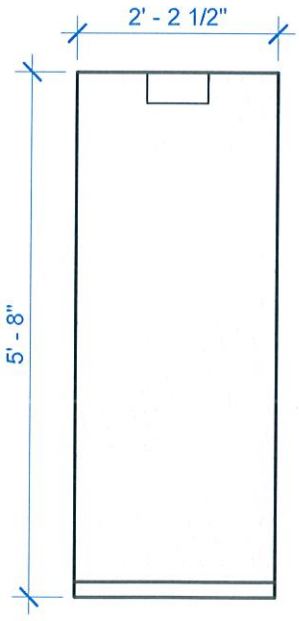

EP-6

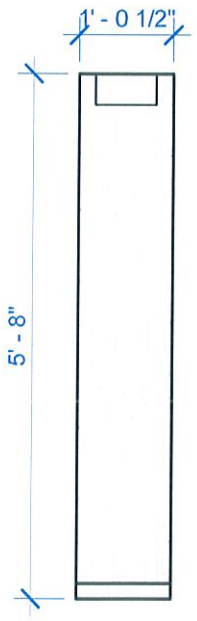

EP-7

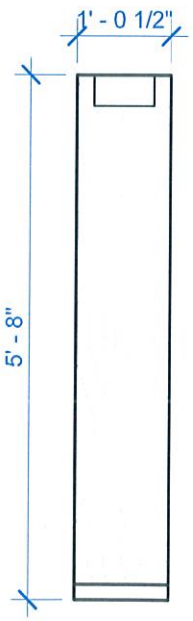

EP-8

1 END PANEL ELEVATIONS

1/2" = 1'-0"

OPN ARCHITECTS

Joplin Public Library

End Panels 2
Details

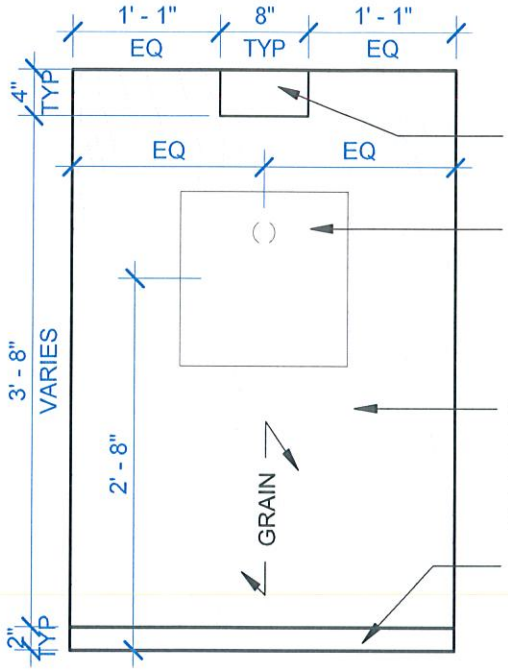

4"X8" ACRYLIC SIGNAGE - SEE DETAILS

OWNER PROVIDED SURFACE MOUNTED TECHNOLOGY PANEL/ATTACHMENT BRACKET. 2" HOLE SHALL BE DRILLED FOR WIRE MANAGEMENT AT 36" HIGH ON CENTER - SEE PLANS FOR ASSOCIATED TECHNOLOGY LOCATIONS.

WALNUT RIFT CUT VENEER. BOTH FACES SHALL BE CAPPED WITH 1/4"X1/4" HARDWOOD AT EXPOSED EDGES. STAIN TO MATCH DESIGNERS CONTROL SAMPLE.

2" HIGH RECESSED ALUMINUM BASE

1 TYPICAL TECHNOLOGY END PANEL ELEVATION
3/4" = 1'-0"

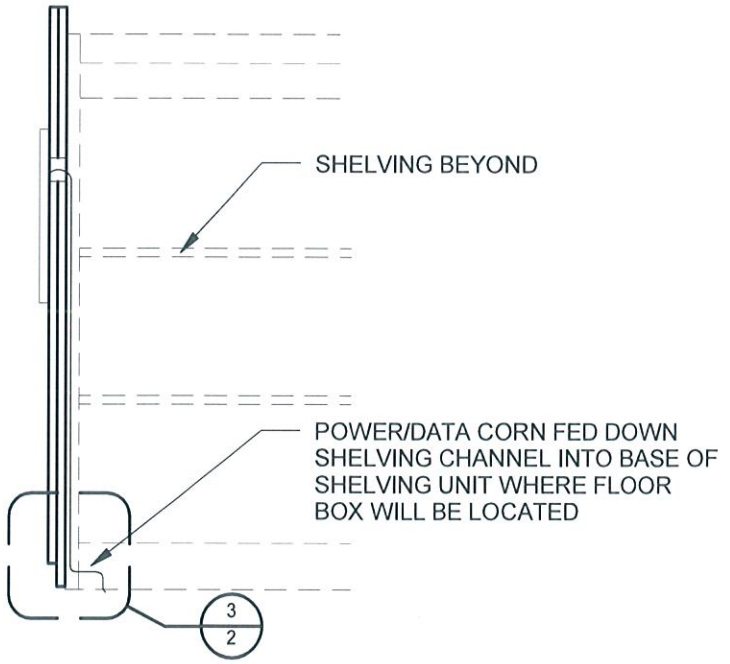

2 SIDE ELEVATION AND TYPICAL BASE DETAIL
3/4" = 1'-0"

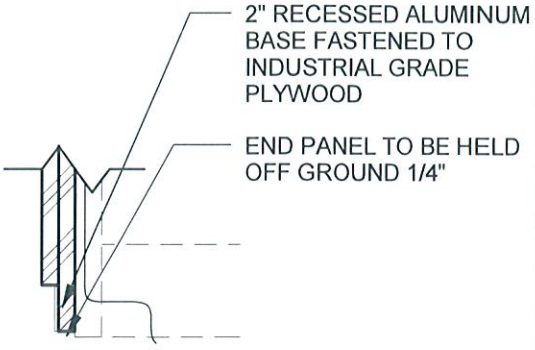

3 TYPICAL BASE DETAIL
1 1/2" = 1'-0"

OPN ARCHITECTS

Joplin Public Library

End Panels 3
Details

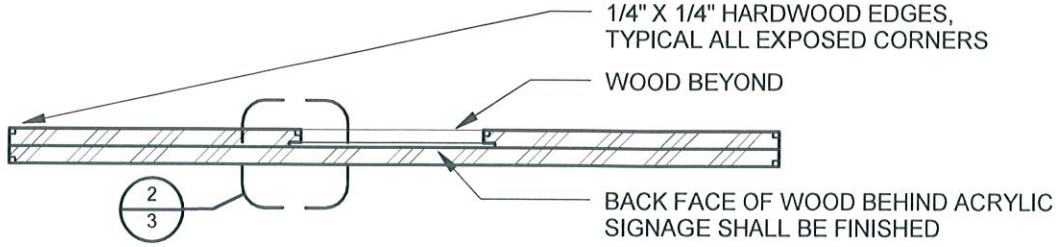

1 END PANEL SECTION
1 1/2" = 1'-0"

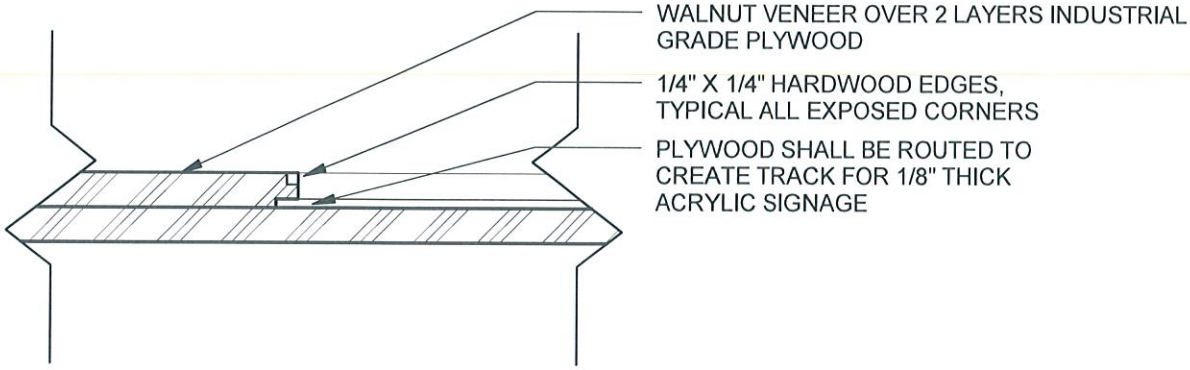

2 END PANEL SECTION DETAIL
3" = 1'-0"

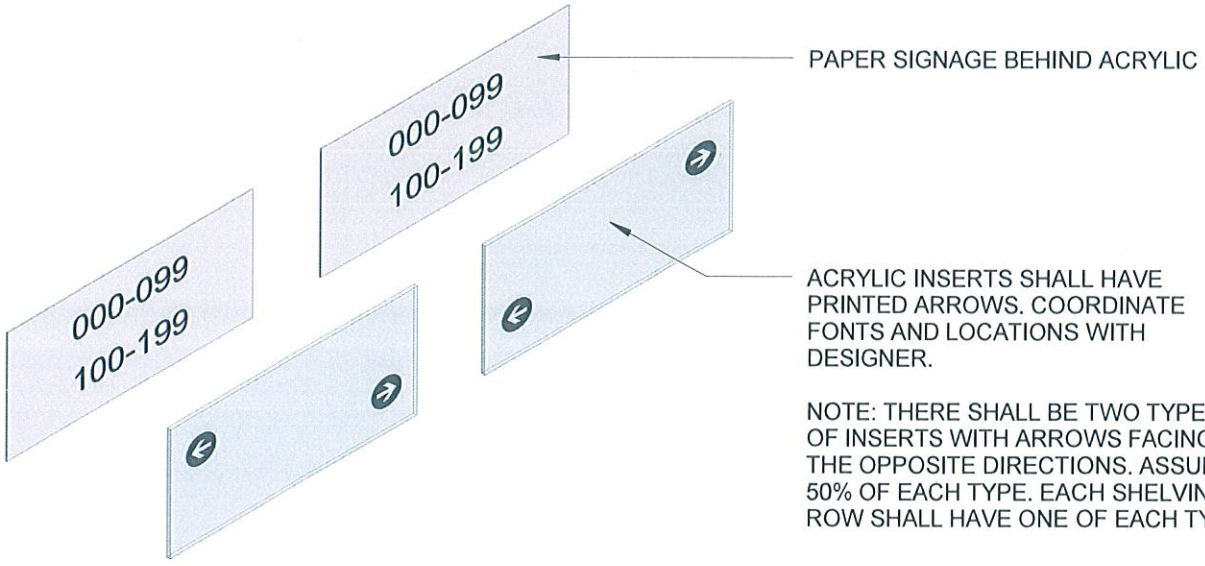

3 SIGNAGE DETAILS

OPN ARCHITECTS

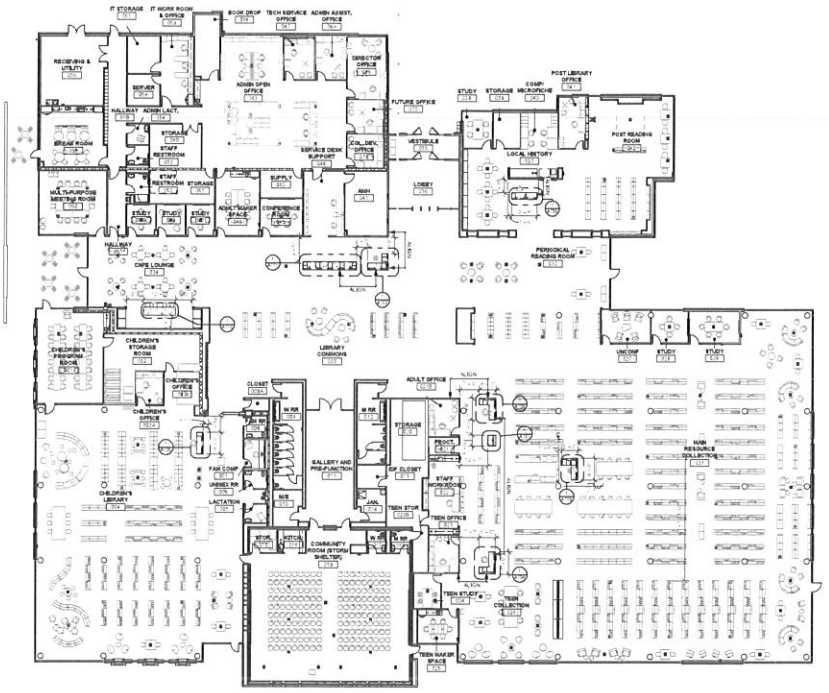

1 CASEWORK KEY PLAN
1/16" = 1'-0"

NOTE: MATERIALS LISTED ARE SPECIFIED AS A BASIS OF DESIGN ONLY. EQUALS MAY BE SUBMITTED AND REVIEWED BY OPN FOR APPROVAL.

MATERIALS LIST

ALUMINUM BASE

AB-1 MANUFACTURER: FRY REGLET
STYLE: REVEAL BASE DRAINAGE
SEE THE DEPTH & HEIGHT

AB-2 MANUFACTURER: FRY REGLET
STYLE: STRAIGHT BASE TO MATCH AB-1
SEE 4" HEIGHT

PLASTIC LAMINATE

PL-01 MANUFACTURER: NEVAMAR
COLOR: CHALK WHITE
FINISH: MATTE
APPLICATION: CASEWORK VERTICAL

PL-02 MANUFACTURER: NEVAMAR
COLOR: VALENCIA TEAK
FINISH: MATTE
APPLICATION: CASEWORK VERTICAL

METAL

MM-TYPE POWDER COATED STEEL
COLOR: RAL 3020 PURE RED
FINISH: GLOSS
GAUGE: 12 GAUGE

MM-TYPE HOT ROLLED STEEL, CLEAR COAT
FINISH: CLEAR SEALANT
GAUGE: 12 GAUGE

MM-TYPE: FRY REGLET
FINISH: CLEAR ANODIZED ALUMINUM

MM-TYPE: ALLEN BLOOM SR8 TEE OR SIMILAR
FINISH: CLEAR ANODIZED ALUMINUM, EASED EDGES

POLYMER RESIN

PR-2 MANUFACTURER: 3FORM
STYLE: VARIA ECORESIN
COLOR: POWDER
FINISH: VELUM - ALL EDGES SANDED
GAUGE: 1"
APPLICATION: BELA/HECH CASEWORK
RFQ 79853 REV 270167

PR-3 MANUFACTURER: 3FORM
STYLE: VARIA ECORESIN
COLOR: VARIA CONCORD + POMEGRANATE
FINISH: VELUM - ALL EDGES SANDED
GAUGE: 1"
MOUNTING HARDWARE: HIDDEN POINT ADAPTER PER 3FORM
MANUFACTURER SPECIFICATIONS
APPLICATION: DESK PRIVACY PANEL
CONTACT: JONATHAN REID
RFQ 79853 REV 270167

PR-4 MANUFACTURER: 3FORM
STYLE: VARIA ECORESIN
COLOR: TO MATCH PR-4 ON PROJECT
FINISH: VELUM - ALL EDGES SANDED
GAUGE: 1"
MOUNTING HARDWARE: HIDDEN POINT ADAPTER PER 3FORM
MANUFACTURER SPECIFICATIONS
APPLICATION: DESK PRIVACY PANEL

QUARTZ

QZ-1 MANUFACTURER: ZODIAQ
COLOR: CLOUD WHITE
THICKNESS: VARIES, SEE DETAILS
APPLICATION: COUNTERTOPS

WALL BASE

WB-1 MANUFACTURER: JOHNSONITE
STYLE: 4" STRAIGHT
COLOR: 2 PVC-WEB
APPLICATION: MAIN WALL BASE @ LIFT AND BY

WOOD VENEER PANELING

WVP-1 SPECIES: WALNUT
CUT: RIFT
STAIN: TO MATCH WVP-1 ON PROJECT

GENERAL NOTES

1. ALL DOOR HINGES TO BE OF THE CONCEALED TYPE UNLESS NOTED OTHERWISE.
2. PROVIDE NECESSARY BLOCKING IN ALL WALLS TO RECEIVE CASEWORK & TRIMWORK.
3. ALL FINISHED DIMENSIONS TO BE FIELD VERIFIED PRIOR TO FABRICATION OF CASEWORK.
4. CABINET ELEVATIONS & SECTIONS SHOW DESIGN INTENT OF ARCHITECT. CASEWORK CONTRACTOR IS RESPONSIBLE FOR TYPICAL CABINET BRACING EVEN IF NOT SPECIFICALLY SHOWN OR NOTED ON THE DRAWINGS.
5. FINISH ALL EXPOSED END PANELS OF CASEWORK TO MATCH ADJACENT CASEWORK UNLESS NOTED OTHERWISE.
6. ALL DIMENSIONS & CASEWORK ARE TO FACE OF FINISHED SURFACE UNLESS NOTED OTHERWISE.
7. ALL PIPES OF PLUMBING LOCATIONS AND EQUIPMENT OPENINGS SHALL BE LOCATED AND CUT ON SITE WITH EQUIPMENT CONSULTANT AND OWNER VERIFY LOCATIONS WITH DESIGNER PRIOR TO INSTALLATION.
8. BUILDING ELECTRICAL FEEDS TO BE COORDINATED WITH ELECTRICAL MILLWORK DRAWINGS AS NOTED ON PLANS. MORE POWER AS NECESSARY IN AREAS WITH RAISED ACCESS FLOORING.
9. ALL CABINETRY SHALL BE LOCKABLE. PROVIDE ONE MASTER LOCK PER PLAN. COORDINATE WITH OWNER.
10. MOUNTING OF ALL AUDIO VISUAL ITEMS SHALL BE COORDINATED WITH EQUIPMENT CONSULTANT, OWNER, AND DESIGNER. ALL OTHER ELECTRICAL DEVICES TO BE SIMILAR TO 2" SQUARE MOCKETT MAGNA-MI. VERIFY LOCATIONS WITH DESIGNER PRIOR TO INSTALLATION. EQUIPMENT MOUNTING DETAILS TO BE COORDINATED WITH EQUIPMENT CONSULTANT AND OWNER.
11. CONTRACTOR TO VERIFY ELECTRICAL FEED LOCATIONS AND COORDINATE WITH MILLWORK. NOTIFY DESIGNER IF DISCREPENCIES OCCUR.
12. CASEWORK PULLS SHALL BE STANDARD. ARCH PULLS CONTRACTOR TO SUBMIT CUTSHEET DURING SHOP DRAWINGS.
13. ALL BASE CABINETS SHALL BE COUNTERBALANCED. TYPICAL.

SPECIAL NOTICES

All the work the Joint Contractor Effort performed in connection with the plans, specifications or other construction documents prepared by the Architect and his consultants is the property of the Architect and shall not be used on any other work except by agreement with the Architect. This prohibition also applies to such documents after the termination of the project. Submission or distribution of such documents to meet official regulatory requirements or for similar purposes in connection with the project is not to be construed as publication in derogation of the Architect's common law copyright or other reserved rights.

The architect and all of the engineers working on a project shall be the legal owners of all the statutory employee & author of work, and the name of the lead author(s) as the owner and the Seal affixed thereto shall be prominently displayed on the face of all drawings. In the event of any dispute, claim, action, arbitration, suit or other proceeding, a work product, agency, or a contractor to use in the part or parts of the architectural work.

NEW BUILDING
Joplin Public Library
1901 E. 20th Street
JOPLIN, MISSOURI 64801
JASPER COUNTY
EDA PROJECT NO. 05-79-05345

Revision No.	Description	Date

Associate Architect: Interior Design

Brad A. Brown, Architect MO 7808.42

STATE OF MISSOURI
REGISTERED ARCHITECT
MICHAEL JAMES SAPP
NUMBER A-6051

Michael James Sapp, Architect MO A-6051

OPN ARCHITECTS

OPN Architects - Missouri State Certificate of Authority #2007000521

SDA ARCHITECTS
SAPP DESIGN ASSOCIATES ARCHITECTS
3750 S. Fremont, Springfield, MO 65804
Phone 417-887-8080
Fax 417-887-8090

Sapp Design Associates Architects, P.C.
Missouri State Certificate of Authority #2006021

Project No.	Date	Drawn
1428000	03-15-17	Author

Drawing No.
A702
CASEWORK DETAIL FLOOR PLAN

©Copyright 2016, Sapp Design Associates, Architects, P.C.