TEREX®

OPTIMA TC SERIES

Hi-Ranger Non-Overcenter Material Handling Aerial Device

AERIAL DEVICE

Terex® Hi-Ranger Aerial Devices are known throughout the industry. They come with a long history featuring quality and innovative design.

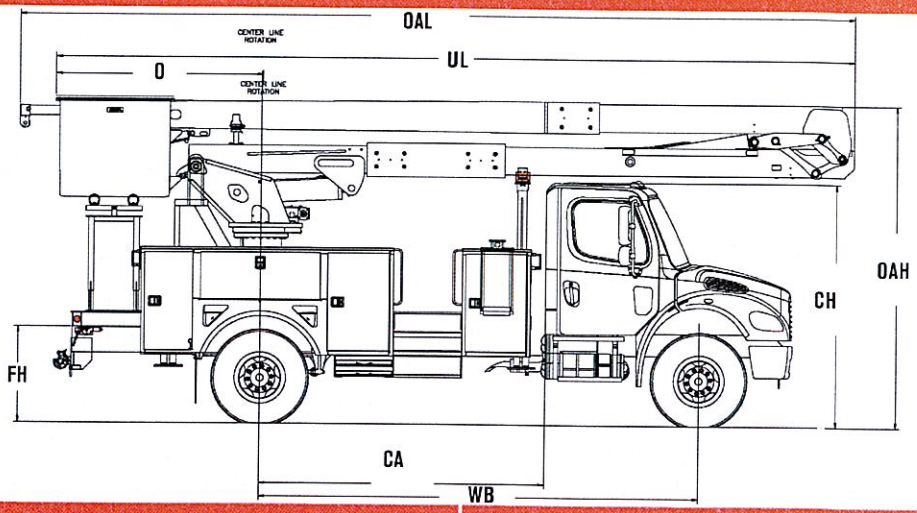

Measurements	Optima TC50	Optima TC55
Typical Frame Height (FH)	40 in. *(101.6 cm)*	40 in. *(101.6 cm)*
Typical Cab Height (CH)	107 in. *(272 cm)*	107 in. *(272 cm)*
Offset (O)	88 in. *(223.5 cm)*	88 in. *(223.5 cm)*
Overall Height (OAH)	11' 11" *(3.6 m)*	11' 11" *(3.6 m)*
Overal Length (OAL)	26' 8" *(8.1 m)*	29' 2" *(8.9 m)*
Unit Length (UL)	25' 5" *(7.75 m)*	27' 11" *(8.6 m)*
Center of Rotation (H)	-	-
Cab to Axle (CA)	102 in. *(259 cm)*	120 in. *(304.8 cm)*
Wheel Base (WB	169 in. *(429 cm)*	187 in. *(475 cm)*
Front Axle (FA)	10,500 lb. *(4,763 kg)*	12,000 lb. *(5,443 kg)*
Rear Axle (RA)	19,000 lb. *(8,618 kg)*	21,000 lb. *(9,525 kg)*
Gross Vehicle Weight Rating (GVWR)	29,500 lb. *(13,381 kg)*	31,000 lb. *(14.061 kg)*
Recommended Weight for Stability	16,000 lb. *(7,256 kg)*	20,000 lb. *(9,525 kg)*
Frame Section Modulus	*18.0 in^3*	*18.0 in^3*
Frame Yield Strength	*50,000 psi*	*50,000 psi*
Frame RBM	*900,000 in-lbs*	*900,000 in-lbs*

TEREX®

3140 15th Avenue SE
PO BOX 1150
Watertown, SD 57201
USA

Phone: (605) 882.4000
Facsimile: (605) 882-1842
www.terex.com/utilities
Email: utilities.info@terex.com

Distributed By:

OPTIMA TC SERIES

Hi-Ranger Non-Overcenter Material Handling Aerial Device

STANDARD EQUIPMENT

- Side-Mount 24" x 48" x 42" Two-Person Platform
- Platform Capacity up to 700 lb *(318 kg)*
- Control-Plus "3-D" Single Stick Control At Platform
- Hydraulic Platform Rotators (105° Side Mt)
- Simplified Compact, Hydraulic Extending Jib
- Safety Harness with Attached Lanyard
- Continuous Unrestricted Worm Gear Rotation
- Category "C" Rating Per ANSI A92.2
- Rectangular, Bi-Axial Epoxy Resin, Filament Wound Fiberglass Booms
- Individual Lever Lower Controls
- Non-Compensated, Full Pressure Open-Centered Hydraulic System
- Automatic Throttle
- Hydraulic Platform Tilt At Upper and Lower controls
- Hydraulic Lower, Mechanical Upper Platform Leveling System
- 70° of Elevation Above Horizontal
- +70° to -90° of Upper Boom Articulation
- 116° of Lower Boom Articulation
- Hydraulic Dual Tools with Flow Control
- Engine Stop /Start
- 30 Gallon Bed Mount Hydraulic Oil Reservoir
- Padded Boom Rest with Upper Boom Tie Downs
- Outrigger Interlock
- Moving Outrigger Alarm
- Truck Level Indicator

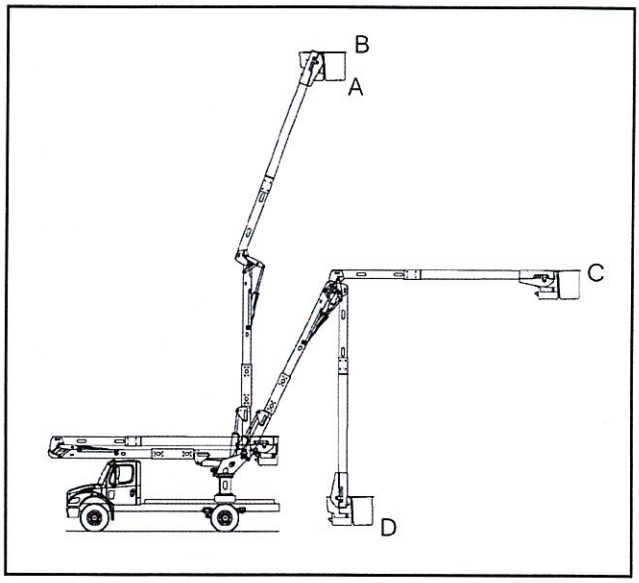

CAPACITIES & DIMENSIONAL DATA (Based on a 40 inch Frame Height)

OPTIMA Model	A	B	C	D
	Bottom of Platform	Working Height	Side Reach	Bottom Platform to Ground
TC50	50.0 ft *(15.2 m)*	55.0 ft *(16.8 m)*	39.3 ft *(12.0 m)*	1.6 ft *(0.5 m)*
TC55	55.0 ft *(16.8 m)*	60.0 ft *(18.3 m)*	42.8 ft *(13.0 m)*	1.3 ft *(0.4 m)*

OPTIONAL EQUIPMENT

- 24" x 30" x 42" One-Person Side Platform
- Various Platform Covers
- Liners with or Without Steps
- 24" Platform Lifter (90° Side Mt)
- Jib Options (*Side Mount Only)*
  - Hydraulic Articulating Jib/Winch, Extend Underload Side Mount 2000 lbs.(907 kg) winch
  - Single Wire / 46 Kv Insulated
  - Single Wire / 15 Kv Insulated
- Single Line Lifter / Multi-Phase Attachments
- Manual Two-Speed Throttle
- Category "B" Rating up to 138 KV Per ANSI A92.2
- Lower Boom Lifting Eye
- Automatic Upper Boom Latch
- Hydraulic Oil Cooler
- Auxiliary Power
- Auxiliary Let Down System
- Boom Overstow Protection
- Boom Stow Interlock
- Boom Storage Warning Light
- Outrigger Sag Light
- Various Types of Outriggers
- Truck Grounding Cable & Clamp
- Terex HyPower SmartPTO Hybrid System

Effective Date: April 2023.. Product specifications and prices are subject to change without notice or obligation. The photographs and/or drawings in this document are for illustrative purposed only. Refer to the appropriate Operator's Manual for instructions on the proper use of this equipment. Failure to follow the appropriate Operator's manual when using our equipment or to otherwise act irresponsibly may result in serious injury or death. The only warranty applicable to our equipment is the standard written warranty applicable to the particular product and sale and Terex makes no other warranty, express or implied. Products and services listed may be trademarks, service marks or trade-names of Terex Corporation and/or its subsidiaries in the USA and other countries. All rights are reserved. Terex® is a registered trademark of Terex Corporation in the USA and many other countries. Copyright 2023 Terex Corporation.