FERRARA

REV GROUP

Ferrara Commercial Medium Rescue

06-06-2019

Joplin Fire Department

Joplin, Missouri

Fire Master Chris Thompson

FERRARA
REV GROUP

Shop Order

Joplin Fire Department
303 East 3rd Street
Joplin, MO 64801

RSM: Jim Stover
Inside Rep: John "Stevie Stiles

Exp. Date: 05/22/2019
Quote No: 11088-0002

RESCUE:	FMR-40-200	Rescue - Medium Duty
LEGALS:	FFA-00-500	Legals - Rescues
CHASS-COMM:	FCC-40-200	CHASSIS - Commercial Rescue MD
CHASS-MODS:	FCM-40-200	Chassis Mods - Commercial 2-Door MD Rescue
BODY:	FBR-41-400	Bodies - Rescue Walk Around, Medium Duty
BODY-CMNT:	FBC-40-200	Body Components - Rescue Med/Heavy
ELE-CMPNT:	FEC-40-200	Elec. Components - Rescue Medium-Duty
PAINT:	FPC-10-700	Paint - Rescue
WRNTY-MNLS:	FWM-60-200	Warranty / Manuals - Rescue Commercial
EQUIPMENT:	FEP-40-200	Loose Equipment Pkg. - Rescue Med/Heavy
ADMN-PROMO:	FPA-10-000	Adminstration

05/01/2019

PART NO	S		DESCRIPTION	QTY
			== Legals - Rescues - 419.001 04/03/19 ==	***1***
00-04-0620			***Apparatus Purchase - HGAC Contract***	***1***
00-12-0420			Manufacturer - Virtual	1
00-12-0620	***S***	***<***	***Principal Dimensions***	***1***
			Overall Length: ~29' 4-1/2"	
			Overall Height: ~9' 7"	
			Wheelbase: ~198"	
			Cab to Axle: ~130"	
00-12-0820			Certified Welders	1
00-12-1020			Body Weight	1
00-14-0220		***>***	***Drawings - Proposal***	***1***
00-14-0620			Drawings - Approval	1
00-16-0220			***Pre-Construction Conference - Factory, (Airfare/Lodging/Meals) Per Person***	***3***
00-16-6220			***Final Inspection - Factory (Airfare/Lodging/Meals) Per Person***	***4***
00-18-0620			***Vehicle Transportation - Over the Road (Per Mile) - FFA ONLY !!!!!***	***646***
00-18-1820	***S***		***Delivery Time: Calendar Days***	***210***
00-18-2020			Vehicle Familiarization & Demonstration	1
00-22-0220			Service Contacts	1
00-22-0620			Company Service Vehicles	1
00-22-0820			Replacement Parts	1
			== CHASSIS - Commercial Rescue MD - 419.001 04/03/19 ==	***1***
			COMMERCIAL CHASSIS - 2 DOOR, RESCUE	**1**
00-G8-0220	***S***	***>***	***CHASSIS - Kenworth T370 (35K GVW/2-Door/380 Engine)***	***1***
			== Chassis Mods - Commercial 2-Door MD Rescue - 419.001 04/03/19 ==	***1***
02-A8-2420			***Relocate Tow Hooks - Commercial Chassis***	***1***
			FRONT BUMPERS / COMPONENTS / ACCESSORIES	**1**
02-C4-2820	***S***		***Front Bumper Extension - 26"***	***1***
02-D2-0220			***Gravelshield - Front Bumper Extension***	***1***
02-K2-1020			***Receiver Hitch - Below Front Bumper, Class 4***	***1***
02-K2-1420	***X***		***Receiver Hitch - Left/Right Body Wheel Well***	***2***
02-K2-1620			***Receiver Hitch - Below Rear Bumper, Class 4***	***1***
02-K6-0620			***Additional 12V Power Connectors (3) - Portable Winch***	***1***

PART NO	S	DESCRIPTION	QTY
02-M6-4020		***Mechanical Siren - DS Pedestal Mount (P7), Federal Q2B***	***1***
02-M8-0220		***Siren Wiring - Active in Response Mode Only***	***1***
02-M8-1020		***Switches - Siren (2), Driver/Officer Side Floor***	***1***
02-P4-1020		***Air Horns (2) - Fender Mounted Driver/Passenger's Side***	***1***
02-P6-0620		***Switch - Air Horn, (2) Driver/Officer Side Floor***	***1***
02-P8-0420		Air Horn Wiring - Active All Modes	1
02-R6-0820	***S***	***Siren Speakers (2) - Driver Side, Whelen SA315P***	***1***
04-E4-2020		Mud Flaps - Front	1
		SINGLE AXLE / TIRES / WHEELS / COMMERCIAL	**1**
04-S6-1220		Tire Pressure Monitor (Single Rear Axles) - LED Alert	1
04-T4-2220		***Wheel Trim - Baby Moons/Lincoln Hats***	***1***
04-T8-0220		***> Automatic Tire Chains - On Spot***	***1***
		AIR BRAKE SYSTEM / COMPONENTS	**1**
06-B4-8020		***Air Auto Eject - Kussmaul 091-28***	***1***
06-B8-0420		***Cover - Air Auto Eject Red, Kussmaul 091-55RD***	***1***
06-B8-4000	***X***	***25' Air Hose w/ Air Chuck***	***1***
		ENGINE / COMPONENTS / CHARGING SYSTEMS	**1**
08-E8-4420		***< > Battery / Air Charger - Pump Plus 1200, Kussmaul 52-21-1100***	***1***
		The battery charging system shall be located within the cab behind the driver's seat.	
08-G4-2020		***> Receptacle - Kussmaul 20 AMP Super Auto-Eject 091-55-20-120***	***1***
08-G4-4220	***S***	***Receptacle Location - Driver's Side Front Body Corner***	***1***
08-G6-0220		***Cover - Super Auto Eject Yellow, Kussmaul 091-55YW***	***1***
08-G8-2020		***Bar Graph Display - Remote, Kussmaul 091-199-01***	***1***
08-G8-4020		***Bar Graph Location - Driver's Seat Riser***	***1***
08-G8-8220		***Plate - Shore Power Inlet***	***1***
		EXHAUST SYSTEM / COMPONENTS	**1**
10-M2-0620		Exhaust System - Run to Front of Right Rear Wheels	1
		COMMERCIAL CAB - EXTERIOR TRIM COMPONENTS	**1**
14-E4-0620		***Exterior Trim - Deluxe Chassis Trim (2 Door Cab)***	***1***
		COMMERCIAL CAB - INTERIOR TRIM COMPONENTS	**1**
14-J2-0420		***> Console - Cab Center (Custom)***	***1***
14-J4-0220		Interior Trim - Lower Door Panels Reflective Material (2 Door Cab)	1
		COMMERCIAL CAB - INSTRUMENTS AND CONTROLS	**1**
14-K4-1020		Vehicle Data Recorder (VDR)	1
14-K6-1020		Light - Battery On Indicator	1
14-K6-1220		Light - Ignition On Indicator	1
14-K6-2220		Switch - Master Load Disconnect	1
14-K6-4420		> Load Manager /with High Idle	1
14-K6-4620		Switch Panel - 6 Position	1
16-M2-2920		***Radio Antenna Mount - MNO***	***2***
16-M2-6220		***> 12-Volt Power and Ground Studs (3)***	***1***
16-M4-2620		***Electronic Siren - Whelen 295HFS2***	***1***
16-M4-8020		***Switch - Horn Ring Siren, Electric Siren***	***1***
		COMMERCIAL CAB - INTERIOR LIGHTING	**1**
16-P2-6220		Light - Open Door, LED	1
16-R4-0820		***Lights (2) - Engine Maintenance, LED***	***1***
		COMMERCIAL CAB - EXTERIOR ILLUMINATION	**1**
18-D2-0620		***Lights (2) - LED Cab Ground, Whelen 20C0CDCD***	***1***
		AUDIO / VISUAL COMMUNICATION SYSTEMS	**1**
18-J2-0220	***S***	***Intercom System - Wired (2) Position, David Clark***	***1***
18-J4-0220		***Intercom Station - David Clark U3800***	***1***
18-J4-1020		***Junction Modules - David Clark U3805***	***1***
18-J4-2020		***> Radio Interface Cords - David Clark***	***1***
18-J6-0220		***Driver's Headset Station - David Clark U3815***	***1***
18-J6-0420		***Officer's Headset Station - David Clark U3811***	***1***
18-J6-1015	***X***	***Single Ear Headset - David Clark H3441 (Each)***	***1***
18-J6-1020		***Dual Ear Headset - David Clark H3442 (Each)***	***1***
18-K4-2020		***Headset Hooks (Each)***	***2***
18-M6-0220		***Camera - Back Up w/Color Monitor, Federal Signal CAMSET70-NTSC4B***	***1***

PART NO	S		DESCRIPTION	QTY
			NFPA SAFETY SIGNS	**1**
18-P2-0220			Safety Signs - General Requirements	1
18-P2-0420			Safety Signs - Battery Explosion, FAMA01	1
18-P2-0620			Safety Signs - Rotating Shafts, FAMA02	1
18-P2-0820			Safety Signs - Hot Surfaces, FAMA03	1
18-P2-1020			Safety Sign - Hot Exhaust, FAMA04	1
18-P2-1220			Safety Sign - Spinning Fan, FAMA05	1
18-P2-1420			Safety Signs - Seated & Belted, FAMA07	1
18-P2-1620			Safety Sign - Air Conditioning Refrigerant, FAMA09	1
18-P2-1820			Safety Sign - Cab Equipment Mounting, FAMA10	1
18-P2-2020			Safety Sign - Fire Service Tire Rating, FAMA12	1
18-P2-2220			Safety Sign - Electronic Stability Control, FAMA13	1
18-P2-2420	***S***		***Safety Sign - Cab Seating, FEMA14***	***1***
18-P2-2620			Safety Signs - Helmet Worn in Cab, FAMA15	1
18-P2-2820			Safety Sign - Vehicle Backing, FAMA17	1
18-P2-4020			Safety Signs - Intake/Discharge Cap Pressure, FAMA18	1
18-P2-4220			Safety Signs - Hose Restraint Required, FAMA22	1
18-P2-4420			Safety Signs - Climbing Method Instruction, FAMA23	1
18-P2-4620			Safety Signs - Riding on Exterior, FAMA24	1
18-P2-4820			Safety Sign - Pump Training, FAMA25	1
18-P2-6020			Safety Signs - No-Step, FAMA26	1
18-P2-6220			Safety Sign - Siren Noise, FAMA42	1
18-P4-1020			Safety Sign - Apparatus Movement Warning	1
18-P6-0220			Plate - Fluid Capacity	1
18-P6-0420			Plate - Overall Height/Length/Weight	1
			== Bodies - Rescue Walk Around, Medium Duty - 419.001 04/03/19 ==	***1***
42-A4-0420			***Body - Medium Duty Walk Around Rescue, 102" Wide Extruded Aluminum***	***1***
42-A4-0425	***X***		***Body Length - 18'***	***1***
42-A8-1020			***Body Sub frame - Extruded Aluminum***	***1***
42-A8-2220			***Body/Compartment Construction - 102" Wide Body***	***1***
42-A8-4220			***Wheel Well Panels & Fenders - Body, Painted Aluminum***	***1***
42-B6-0420	***S***	***<***	***Compartments - Left Side (42/42/58/43 w/70" Interior Height)***	***1***
			L1	
			There shall be one-(1) front compartment installed ahead of the rear axle. This compartment shall have one-(1) roll-up door. The compartment shall be approximately 42" wide x 70" high x 29" deep in the lower and transverse in the upper. The compartment shall have a usable door opening of approximately 39-1/2" wide x 61-1/4" high.	
			L2	
			There shall be second front compartment installed ahead of the rear axle. This compartment shall have one-(1) roll-up door. The compartment shall be approximately 42" wide x 70" high x 29" deep in the lower and transverse in the upper. The compartment shall have a usable door opening of approximately 39-1/2" wide x 61-1/4" high.	
			L3	
			There shall be one-(1) compartment installed above the wheel well. This compartment shall have one-(1) roll-up door. The compartment shall be approximately 58" wide x 38" high x transverse. The compartment shall have a usable door opening of approximately 55-1/2" wide x 29-1/4" high.	
			L4	
			There shall be one-(1) rear compartment installed behind the rear axle. This compartment shall have one-(1) roll-up door. The compartment shall be approximately 43" wide x 70" high x 29" deep. The compartment shall have a usable door opening of approximately 40-1/2" wide x 61-1/4" high.	
42-C2-4221		***>***	***Compartment Doors - Left Side Roll Up, ROM PAINTED***	***4***
42-C2-6020	***S***	***>***	***Electric Door Locks - Roll-Up Doors***	***4***
42-D6-0420	***S***	***<***	***Compartments - Right Side (42/42/58/43 w/ 70" Interior Height)***	***1***
			R1	

PART NO	S		DESCRIPTION	QTY
			There shall be one-(1) front compartment installed ahead of the rear axle. This compartment shall have one-(1) roll-up door. The compartment shall be approximately 42" wide x 70" high x 29" deep in the lower and transverse in the upper. The compartment shall have a usable door opening of approximately 39-1/2" wide x 61-1/4" high.	
			R2 There shall be second front compartment installed ahead of the rear axle. This compartment shall have one-(1) roll-up door. The compartment shall be approximately 42" wide x 70" high x 29" deep in the lower and transverse in the upper. The compartment shall have a usable door opening of approximately 39-1/2" wide x 61-1/4" high.	
			R3 There shall be one-(1) compartment installed above the wheel well. This compartment shall have one-(1) roll-up door. The compartment shall be approximately 58" wide x 38" high x transverse. The compartment shall have a usable door opening of approximately 55-1/2" wide x 29-1/4" high.	
			R4 There shall be one-(1) rear compartment installed behind the rear axle. This compartment shall have one-(1) roll-up door. The compartment shall be approximately 43" wide x 70" high x 29" deep. The compartment shall have a usable door opening of approximately 40-1/2" wide x 61-1/4" high.	
42-E2-4221		>	*Compartment Door - Right Side Roll Up, ROM Painted*	*4*
42-E2-6020	*S*	>	*Electric Door Locks - Roll-Up Doors*	*4*
44-A4-0620	*S*	<	*Compartment - Center Rear, Full Height*	*1*
			B1 There shall be one-(1) front compartment installed at the rear of the apparatus. This compartment shall have one-(1) roll-up door. The compartment shall be approximately 38" wide x 70" high x 46" deep. The compartment shall have a usable door opening of approximately 35-1/2" wide x 61-1/4" high.	
44-A8-4221			*Compartment Door - Rear Roll Up, ROM Painted*	*1*
44-A8-6020	*S*		*Electric Door Locks - Roll-Up Doors*	*1*
58-E2-0620		< >	*Compartments (4) - Roof Top Storage*	*1*
			Each compartment shall have a grommet mount LED installed to the compartment inner door pan that activates when the door is open.	
64-B4-0420			*Compartment - Wheel Well Double Air Bottle, Left Rear (SIG4)*	*1*
64-B6-6220			*Compartment - Wheel Well Double Air Bottle, Right Rear (SIG4)*	*1*
66-A2-0420			Body Trim Package	1
66-A2-1620	*S*		*Exterior Trim - Treadplate, Front of Body*	*1*
66-A2-4420			Mud Flaps - Rear	1
66-A2-4620			Rub rail - Extruded Aluminum	1
66-A4-1020			*Step - 12" Rear, Aluminum Tread Plate*	*1*
66-A4-8420		<	*Access Ladder - Rear Mounted, Knurled Aluminum*	*1*
			The access ladder shall be provided on the driver's side rear of the apparatus.	
66-A4-8820			Tow Eyes (2) - Rear, Below Body	1
			== Body Components - Rescue Med/Heavy - 419.001 04/03/19 ==	*1*
66-B2-0620		< >	*Unistruts - Aluminum, Per Compartment*	*9*
			There shall be one-(1) set of vertically mounted unistrut provided within each body compartment.	
66-B2-8620	*S*	<	*Shelf - Adjustable, 90" Deep*	*2*
			These two-(2) full depth shelves shall be installed full width/depth of the engineers compartment (L1/R1).	

PART NO	S		DESCRIPTION	QTY
66-B2-8620		<	***Shelf - Adjustable, 45" Deep***	***9***
			Exact locations to be determined in the pre-construction conference.	
66-C2-4620	***S***	<	***Tray - 1000 Pound Roll-Out, 45" Deep***	***4***
			Exact locations to be determined in the pre-construction conference.	
66-D4-0620		<	***Tool Board - Vertical Roll Out, 45" Deep x Full Height***	***4***
			Exact locations to be determined in the pre-construction conference.	
66-F4-1020			***Turtle Tile - Compartment Floors, Black (Per Compartment)***	***9***
66-F4-1620			***Turtle Tile - Compartment Shelf/Tray, Black (Per Shelf/Tray)***	***13***
			== Elec. Components - Rescue Medium-Duty - 419.001 04/03/19 ==	***1***
			***** ELECTRICAL / COMPONENTS / ACCESSORIES *****	**1**
70-A2-2020			Electrical System - Apparatus Body	1
70-A2-4020			Electrical System - 12 Volt Testing	1
70-A2-6020			12-Volt Wiring Protection - Split Loom	1
70-A2-8020			EMI/RFI Protection	1
			AUDIBLE WARNING DEVICES	**1**
70-B2-0220		>	Back Up Alarm - 107 dB, Whelen WBUA107	1
			INTERIOR COMPARTMENT LIGHTING	**1**
70-E2-2220		< >	***Light - LED Compartment, On Scene Solutions Access Series***	***18***
			Locations: There shall be two-(2) LED strip lights mounted vertically, one-(1) each side, within the door opening of each compartment.	
70-H2-0220		>	Switch - Compartment Door Ajar Indicator	1
72-G8-2220		<	***Zone A Upper Light Bar - 55" LED, Whelen Freedom IV F4N2QLED w/2 Additional LEDS***	***1***
			This lightbar shall include the following:	
			Two (2) red flashing forward facing LED modules.	
			Two (2) clear flashing forward facing LED modules.	
			Two (2) red flashing front corner LED modules.	
			One (1) Blue flashing driver side facing LED module.	
			One (1) Blue flashing officer side facing LED module.	
72-G9-0220		>	***Opticom Emitter - Lightbar Mounted, GTT 795H LED***	***1***
72-M8-4620			***Zone B/D Upper Body Side Front Lights (2) - Red/Blue w/Clear Lens M6 LED, Whelen***	***1***
72-P8-4620			***Zone B/D Upper Body Side Rear Lights (2) - Red/Blue w/Clear Lens M6 LED, Whelen***	***1***
72-S8-0220			***Zone C Upper Outboard Lights (2) - Red/Blue w/Clear Lens M9 LED, Whelen M9J***	***1***
74-B8-4820	***S***		***Zone A Lower Lights (2) - Red/Blue w/Clear Lens M6 LED, Whelen M6J***	***1***
74-C8-9820		>	***Zone B & D Lower Front (2) - Red/Blue w/Clear Lens M6 LED, Whelen M6J***	***1***
74-D8-8820			***Zone B & D Lower Midship (2) - Red/Blue w/Clear Lens M6 LED, Whelen M6J***	***1***
74-G8-1420			***Zone B & D Lower Rear (2) - Red/Blue w/Clear Lens LINZ6 LED, Whelen LINZ6J***	***1***
74-H8-2620			***Zone C Lower Lights (2) - Red/Blue w/Clear Lens M6 LED, Whelen M6J***	***1***
74-J4-0620			***Stop/Turn/Reverse Lights - LED, Whelen M6***	***1***
74-J4-2620			***Housing - Rear Tail Light Assembly, M6FCV4***	***1***
74-J8-1220		>	***Light - LED Rear Directional, Whelen TAL85***	***1***
74-J9-0220			***Rear Directional Light Mounting - Surface Mount***	***1***
74-J9-6020			***Control Head Location - Traffic Light, Centered Top of Dash***	***1***
			12-VOLT APPARATUS LIGHTING / ACCESSORIES	**1**
74-L0-2220			Lights - LED Clearance and Maker	1
74-L2-0420			***Light - LED Underbody, Whelen 20C0CDCR***	***4***
74-L2-4020			Light - LED License, Whelen OSC0EDCR	1
74-L2-4820		<	***Light - LED Perimeter Illumination, Whelen PELCC***	***2***
			The lights shall be located on the rear of the apparatus to illuminate the tail board. The lights shall be activate by the work light switch.	
74-P2-1620			***Lights (2) - M6 LED Scene, Whelen M6ZC***	***3***
74-P4-2020		>	***Scene Light Locations - Side of Body, Upper Front Corners***	***1***
74-P4-2222			***Switch - Front Body Side Scene Light Activation, Cab Mounted***	***1***

PART NO	S		DESCRIPTION	QTY
74-P4-4020		>	*Scene Light Locations - Side of Body, Upper Rear Corners*	*1*
74-P4-4220			*Switch - Rear Body Side Scene Light Activation, Cab Mounted*	*1*
74-P4-8020		>	*Scene Light Locations - Upper Rear of Body, Outboard*	*1*
74-P4-8220			*Switch - Upper Rear Scene Light Activation, Cab Mounted*	*1*
76-A0-1600			*Generator Package - Below Apparatus*	*1*
76-A2-4020			*Generator - 25 KW PTO, Onan Protec YD 25*	*1*
76-B6-0220			*Generator Power Take Off (PTO)*	*1*
76-B6-0420			*Light - Indicator, Generator PTO*	*1*
76-B8-4020	*S*		*Cover - Generator*	*1*
76-B8-6020			*Plate - Generator Power Source Specification*	*1*
76-C2-0620		>	*Breaker Panel - 240/120V 12-Leg, General Electric*	*1*
76-C4-1020			*120-Volt Wiring Protection - Split Loom*	*1*
76-C6-0220			*Electrical System Requirements/Testing - 120-Volt*	*1*
76-D4-0620		< >	*Receptacle - 20 AMP/120V Twist-Lock, NEMA L5-20*	*6*
			Two (2) 120 volt exterior outlets on each side of the front of the body.	
			- The outlet receptacle(s) shall be 20 amp, twist-lock (NEMA L5-20R)	
			Two (2) 120 volt exterior outlets, one (1) each side near rear wheel well area.	
			- The outlet receptacle(s) shall be 20 amp, twist-lock (NEMA L5-20R).	
			Two (2) 120 volt exterior outlets on each side of the rear of the body.	
			- The outlet receptacle(s) shall be 20 amp, twist-lock (NEMA L5-20R).	
76-H2-2220	*S*	<	*Junction Box - 120V w/20 AMP Receptacles, Akron EJBX*	*2*
			Each electrical junction box shall be equipped with two-(2) L5-20 receptacles and two-(2) 20A straight blade (household) receptacles as specified by the user.	
76-H2-8020		< >	*Bracket - Junction Box*	*2*
			A total of two (2) mounting brackets shall be provided and installed inside the front forward left compartments direct beneath each installed cord reel.	
76-H4-0420			*Receptacle - PF51G-3 Twist-Lock L5-15*	*2*
76-N2-0620			*Tripod Light Locations - Rear of Body*	*1*
76-N6-2820		>	*Light - 120 Volt LED Tripod, FRC Spectra SPA600-K20*	*2*
78-A2-1020		>	*Reel - Electric Rewind Cord w/200' of 10-3, Hannay ECR1618-17-18*	*2*
78-A2-2040			*Electrical Cord Color - Yellow*	*2*
78-A4-0220			*Hose/Cord Rollers*	*2*
78-A4-0420			*Hose/Cord Stop - Hannay HS-3*	*2*
78-A4-0620			*Plate - Power Rewind Reel*	*2*
			== Paint - Rescue - 419.001 04/03/19 ==	*1*
80-C2-0220			Paint - Body/Cab	1
80-C2-2620	*S*	>	*Cab Paint Color/Code: Special*	*1*
80-D2-0620		< >	*Paint - Interior Compartment, "F-Shield" Extruded Bodies*	*1*
			Color: Dark gray.	
80-D2-2020		>	*Paint - Interior Compartment Hardware, "F-Shield"*	*1*
80-E2-1820			*Stripe - Scotchlite, 1-6-1 Triple*	*1*
80-E4-0620			*Striping Color: Gold*	*1*
80-E4-4620			*Pin Stripe/Secondary Stripe Color: Black*	*1*
80-E4-8020			*Striping Layout: Straight Down Cab/Body*	*1*
80-E8-0220			Striping - Rear Body, Reflective Chevron	1
80-E8-0620			Chevron Striping Colors: 3M Red & Lime Green	1
80-E8-4020			Reflective Material - Designated Walking Surfaces	1
80-G2-0220			Lettering - 3" Spun Gold w/Shade	1
80-H2-0620			*Decals/Maltese Cross (2)*	*1*
			== Warranty / Manuals - Rescue Commercial - 419.001 04/03/19 ==	*1*
98-A2-0420			Warranty - Body Parts & Labor, 2-Year	1

PART NO	S	DESCRIPTION	QTY
98-A2-1020		Warranty - Cab/Chassis Parts & Labor, 2-Year	1
98-A4-0420		Warranty - Body Structure, 10-Year/100,000 Miles	1
98-A6-0220		Warranty - Body Paint/Perforation, 10 Year	1
98-A8-4220		Warranty - Cummins Engine, 5-Year/100,000 Miles	1
98-A8-4420		Warranty - Allison Automatic Transmission, 5-Year/Unlimited Miles	1
98-A8-4620		Warranty - Anti Lock Brake System, 3-Year/300,000 Miles	1
98-B2-1820		Manuals - Apparatus Body & Components	1
98-B2-2220		Safety Guide - FAMA	1
98-B2-6020		Wiring Diagrams - Cab/Chassis, Standard	1
98-B2-6620		Wiring Diagrams - Apparatus Body, Standard	1
		== Loose Equipment Pkg. - Rescue Med/Heavy - 419.001 04/03/19 ==	***1***
90-A2-0820	>	Equipment Package - NFPA 1901 2016, Fire Department Supplied	1
94-G2-1820	***<***	***Light - w/Charging Base, Streamlight Fire Vulcan LED Orange 44451***	***2***
		One shall be mounted on the front wall of the front compartment of each side of the apparatus. Exact locations determined during the pre-construction conference	
96-C2-0220	***<***	***Wheel Chocks (2) - Folding, Ziamatic SAC-44-E w/Mounting Bracket***	***2***
		The brackets shall be mounted on each side of the apparatus just in front of the rear axle.	
96-J2-0220		***Miscellaneous Hardware Bag***	***1***

Joplin Fire Department

Ferrara 2-Door Kenworth T370 Heavy Rescue

APPARATUS PURCHASE

The specified apparatus will be purchased off the HGAC contract.

VIRTUAL MANUFACTURING

The manufacturer shall have a web site available for the customers to 'watch' their unit being produced. The "Trucks in Production" shall be updated a minimum of three-(3) times per week.

The web site shall also include documentation of cab and body crash tests, take a virtual tour of the production facility, videos of both current and new innovative products, updates on trade shows, photos of new deliveries and the opportunity to include customer 'Action Photo's.

Customer shall be able to access the web site without the requirement of a password.

PRINCIPAL DIMENSIONS

The apparatus shall have the following dimensions:
Overall Length: ~29' 4-1/2"
Overall Height: ~9' 7"
Wheelbase: ~198"
Cab to Axle: ~130"

CERTIFIED WELDERS

The manufacturer shall employ individuals that are certified aluminum and stainless steel welders. The welders shall be certified by an outside testing laboratory. The certifications shall be available for viewing through the Human Resources office upon request.

BODY WEIGHT DOCUMENTATION

The manufacturer shall weigh each body prior to mounting on the chassis. The information shall be included in the documentation of the finished vehicle. Each body produced by the manufacturer shall be weighed, not just one body per model.

DRAWING, PROPOSAL

There shall be a proposal drawing submitted to the Fire Department. This drawing shall be a visual interpretation of the apparatus proposed.

DRAWING, APPROVAL

Prior to construction, the contractor shall provide three-(3) approval drawings of the apparatus for the fire department's review. The drawings shall show such items as the chassis being utilized, lights, horns, sirens, pump panels, and all compartment locations and dimensions. The blueprint shall be a visual interpretation of the unit as it is to be constructed, In the event of discrepancies on the print the specifications shall prevail. The buying authority shall sign all drawings. One-(1) print shall be retained by the Fire Department, the dealer/sales representative shall retain one-(1) print, and one-(1) print shall be returned to the manufacturer.

PRE-CONSTRUCTION CONFERENCE

A pre-construction conference will be held at the factory prior to the actual construction of the vehicle(s). The conference will be held in the manufactures facility with Three (3) representatives of the Fire Department and appropriate representatives of the manufacturer.

Transportation, lodging and meals will be the responsibility of the manufacturer.

INSPECTION TRIP, FINAL

There will be a final inspection for Four (4) representatives of the buying authority at the facility where the apparatus is being constructed. The inspection trip will be completed when the apparatus is complete. Factory and Sales representatives will be available at the time of inspection.

The final inspection will include as a minimum:

-Full access to the build file and factory personnel to provide answers for any issues found.
-Unit will be placed on a lift that will allow full inspection of the undercarriage.
-Road test shall be accommodated.
-Unit will be taken to pump test area where the pump and plumbing can be inspected while flowing water.
-General apparatus orientation and operation shall be provided at the pump test pit.

Transportation, lodging and meals will be the responsibility of the manufacturer.

VEHICLE DELIVERY/TRANSPORTATION

To insure proper break-in of all components while still under warranty, the apparatus shall be delivered over the road under its own power (Rail and/or truck freight shall not be acceptable).

DELIVERY TIME

The apparatus shall be delivered within Two Hundred Ten (210) calendar days after receipt of the ordered Kenworth chassis and the approved, signed off, pre-construction changes.

The manufacturer shall not be held liable for changes arising from its failure to make or delay in making delivery because of fire, flood, strike, riot, chassis shortage, accidents, acts of God, or any circumstances beyond our control.

VEHICLE FAMILIARIZATION & DEMONSTRATION

Familiarization and demonstration of the vehicle shall be by a competent and qualified person as defined in the current standard of NFPA 1901 standard.

Familiarization of the vehicle shall include the following:

How to locate gauges or indicators and check all fluid levels and operational issues of the vehicle

How to tilt the chassis cab or hood assembly for access to the engine, fire pump, or aerial control, or any other device to allow access to fluids or for required maintenance

Interior cab controls, instruments, mirrors, safety devices or alarms, brake operations, transmission control, pump

controls, exhaust regeneration (if provided), seat adjustments, warning light engagement, and other operational equipment

If the apparatus is provided with a fire pump system, the following minimum instructions:

a) Setting of parking brake, proper transmission gear, and fire pump engagement operations
b) Throttle control
c) Primer and tank-to-pump operation
d) Use of pressure control devices
e) Tank refilling operations
f) Proper operation of discharge controls
g) Proper shutdown and draining of system

If the apparatus is provided with a generator, the following minimum instructions

a) Proper engagement if driven by the chassis
b) Startup, operation, and shutdown of generator
c) Monitoring of controls and instruments

If the apparatus is provided with a foam system, the following minimum instructions:

a) Startup, operation, and shutdown of foam system
b) Setting of foam percentages and other operational settings
c) Proper flushing and draining of the system

If the apparatus is provided with a water tower or aerial device, the following minimum instructions:

a) Positioning and locating the vehicle for safe operations
b) Chassis parking brakes and engagement of hydraulic system
c) Deployment of stabilization devices and use of ground pads
d) Operation of elevation, extension, and rotation of the aerial device
e) Operation of waterway, nozzle, and other firefighting devices of aerial device
f) Operation and use of breathing air system (if provided)
g) Specific aerial device maintenance and service areas for operators
h) Shutdown and return to service operations
i) Operation of tip controls and platform controls
j) General familiarization and demonstration of aerial device
k) Review of all safety devices, interlocks, and operational Hazards

MANUFACTURER SERVICE CONTACTS

The manufacturer must have a 24 hour/ 7 day a week, toll-free emergency hot line. The manufacturer must be capable of providing both in-house and on-site service for the apparatus. The service technicians shall be EVT certified in compliance with NFPA 1071 classifications F2 through F6. On-site service and maintenance shall be the primary function, to eliminate the vehicle having to leave the fire department jurisdiction. Copies of the certifications shall be made available through the Human Resources office.

SERVICE VEHICLES

Joplin Fire Department

Ferrara 2-Door Kenworth T370 Heavy Rescue

The manufacturer shall have a minimum of 10 full time, company owned, service vehicles. The vehicles shall be available 24 hours a day, seven days a week to respond to customer needs. The Service Vehicles shall be operated by full time EVT Certified Technicians.

REPLACEMENT PARTS

Replacement parts shall be available directly from the manufacturer, as well as the dealer and or service centers.

CHASSIS

Model	
	T370 SERIES CONVENTIONAL Electric Door locks LH/RH; Ignition & doors keyed alike; Single electric horn; Single-piece windshield; Electric windshield wipers, 2-speed plus intermittent; Electric windshield washers; Steering wheel 18in. 4-spoke; Glovebox door with locking latch; Dash-mounted cruise control with switches;Turn signal switch with column-mounted dimmer; Standard dash panels include gray w/ burl wood accents; Slate Gray interior primary color; Dark Slate Gray seat color; Floormat; Inside sunvisor, LH/RH; Door courtesy lights; Under-dash center console with 1 cup holder, 1 ashtray & 1 lighter.
	T370 Class 7: medium-duty Conventional.
	Chassis operation will include stationary application used in lower 48 states [US only]. Stationary operation is defined as running the engine under load while stationary at a substantial fraction of engine gross horsepower (60% or greater) for an extended period of time (longer than 5 - 10 minutes).
	CARB Idle Emissions Reduction Feature for PX-7 and PX-9
	CARB Exempt Application Emergency Vehicle Only.
	Medium-duty 4x2 automatic.
	Fire apparatus
	Fire truck service. Vehicles used in fighting fires. Typically have pumps, etc., mounted in the body. Road usage: minimum 5% Class B and maximum 5% Class D.
	Fire truck-pumper
	U.S. Domestic Registry, 50-State
Engine & Equipment	
	PACCAR PX-9 380EV 2017 380@2000 368@2100 1150@1400 Emergency Vehicle includes turbo exhaust brake, no code is used. Diagnostic Plug for data link, Oil Cooler, Aluminum Flywheel Housing. N09200 N205 75...Standard Maximum Speed Limit [LSL] N09220 N207 0....Expiration Distance N09260 P14 65...Maximum Accelerator Pedal Vehicle Speed N09300 P19 65...Maximum Cruise Speed N09360 N203 252..Reserve Speed Function Reset Distance N09380 N202 0....Maximum Cycle Distance

N09400 N206 10...Maximum Active Distance
N09420 N201 0....Reserve Speed Limit Offset
N09440 P11 NO...Engine Protection Shutdown
N09460 P06 NO...Gear Down Protection
N09480 P26 2100.Max PTO Speed
N09500 P02 NO...Cruise Control Auto Resume
N09520 P04 NO...Auto Engine Brake in Cruise
N09540 N209 0....Expiration Distance
N09560 P520 YES..Enable Idle Shutdown Park Brake Set
N09580 P32 5....Timer Setting
N09600 P233 YES..Enable Impending Shutdown Warning
N09620 P234 60...Timer For Impending Shutdown Warning
N09640 P516 35...Engine Load Threshold
N09680 P33 NO...Idle Shutdown Manual Overrule
N09720 P230 YES..Enable Hot Ambient Automatic Overrule
N09740 P46 40...Low Ambient Temperature Threshold
N09760 P56 60...Intermediate Ambient Temperature Threshold
N09780 P47 80...High Ambient Temperature Threshold

Prospector Version 43.1
Replaces 43.0

Effective VSL Setting NA

Engine Idle Shutdown Timer Disabled

Enable EIST Ambient Temp Overrule

Eff EIST NA Expiration Miles
Use only with MX and Cummins engines

Air compressor: Cummins 18.7 CFM For Cummins And PACCAR PX engines.

Air Cleaner: Dry-type firewall mounted w/filter restriction indicator.

Air inlet ember separator NFPA compliant for fire applications.

Fan Hub: Horton 2-Speed for ISL9, ISL-G,
PX-8 or PX-9

Cooling module: 1000 square inches
T170/T270/T370/T470. Includes metal surge tank on T170/T270/T370.

Exhaust: 2017 EPA Horizontal Series DPF/SCR For
PX-9 w/ Horizontal Tailpipe Below RH Rail.

Fuel Filter:Fleetguard FS1003
Fuel/Water Separator for PX-9

Run Aid:None
*For Fuel Filter

Start Aid:None
*For Fuel Filter

	Engine block heater plug mounted LH fender bracket.
	Block heater, PACCAR 750 watt 120V for PX-6 and PX-7, 1000 watt for PX-8 and PX-9 or ISL9 engines .
	Oil pressure sender for pump panel gauge VDO 360-009.
	Alternator: Delco 40SI 320 amp Brushless with battery voltage sense
	Batteries: 3 PACCAR GP31 threaded post (700-730) 2100-2190 CCA dual purpose.
	Starter: PACCAR 12 volt electrical system. W/ centralized power distribution incorporating plug-in style relays. Circuit protection for serviceability, 12-volt light system w/circuit protection circuits number & color coded.
	Cab Power Cutoff SW on Cab Floor
	NFPA Compliant - Engine Shut off
	Multi-function engine connector for body builder interface for Cummins.
	Body Builder Control Harness coiled EOF for customer installed remote throttle and remote PTO controls. Harness includes Remote PTO control and Remote Throttle controls. T680/T880 models do not require 12-way engine connector sales codes. All other models require (1900082 or 1900084).
	Jump start terminals under hood.
	Body Builder Battery Power Prewire
Transmission & Clutch	
	Transmission: Allison 3000EVS 5-speed w/PTO drive gear. 5th Gen controls. Includes heat exchanger & oil level sensor. Emergency Vehicle Series for vocational applications. Transynd transmission fluid is standard on all Allison 1000, 2000, 3000 & 4000 series transmissions.
	Driveline: 2 SPL170XL 1 centerbearing requires 3500057 interaxle driveline.
	One bolted centerbearing crossmember. This option upgrades an existing crossmember. The cost does not include the centerbearing and bracket. Crossmember location will be in accordance with Kenworth engineering standards, using the major components specified on the DTPO.
	Torque converter included w/Allison Transmission.
	Auto neutral not required this application.

	Customer-installed split shaft PTO Informational only, nothing additional is provided.
	J1939 Park Brake Auto Neutral
	Rear transmission support springs for transmission PTO applications are required to ensure that engine flywheel housings are not overloaded when transmission PTO's are installed.
Front Axle & Equipment	
	Meritor MFS12E PLUS 12.5K rated at 12K 3.5in. drop standard track.
	Front brakes included w/ front hub package.
	Integral Knuckle for Air Disc Brake, for use on Meritor MFS PLUS Steer Axle
	Bendix 14.6K Air Disc Brake. Package includes splined rotor for air disc brakes with aluminum Preset hub pilot hubs, hubcaps. For use w/ 22-1/2in. Wheels.
	Front Springs: Taperleaf 12K w/ shock absorber 54 in. T270/370 only for use on air disc brakes/RSD 2010+ chassis w/ 22.5in. wheels only.
	Single power steering gear: 13.2K for air brakes.
	Front Disc Brake Pad/Rotor Dust Sheilds Air Disc Brakes Only.
Rear Axle & Equipment	
	Single Dana Spicer S23-172 single reduction axle, single rear axle rated at 23K.
	Rear Axle Ratio - 5.38.
	Single rear brakes included w/rear hub package.
	26K air brake package includes 16-1/2x7 in. brakes, cast drums, iron 10-bolt hub pilot hubs, slack adjusters and oil seals for use w/ 22.5 in. wheels.
	Spring Brake: 3036 single.
	Bendix 4S/4M anti-lock brake system w/ air traction control (ATC) and electronic stability program (ESP) for full truck. Must code for additional body information.
	Tanker height less than 75 in. from top of frame rail
	Rear suspension: single Reyco 79KB multileaf 26K with helper spring. Medium duty. Unladen Height: 10.8 in. Laden Height: 8.1 in. Not rear air disc brake compatible.
	Bolted rear suspension crossmembers for Reyco 79KB. Replaces T3 standard.

Joplin Fire Department

Ferrara 2-Door Kenworth T370 Heavy Rescue

Tires & Wheels

Front Tires: Goodyear Endurance RSA 11R22.5 16PR

Rear tires: Goodyear G182 RSD 11R22.5 16PR.
42.1 in. diameter, all position. 19.6 in. SLR. Code is priced per pair of tires.

Rear Tire Quantity: 4

Front Wheel: Alcoa 88367 22.5x8.25 aluminum with
Lvl One [TM] finish, hub-pilot mount. 7,400 lb. maximum rating. Air disc brake compatible.

Rear Wheel: Alcoa 88367 22.5x8.25 aluminum with
Level One [TM] finish, hub-pilot mount. 7400 lb. maximum rating. Air disc brake compatible. Code is priced per pair of wheels.

Rear Wheel/Rim Quantity: 4

Frame & Equipment

Frame Rails: 10-3/4 x 3-1/2 x 3/8in. Steel 285in.
to 336 in. Truck frame weight is 3.48 lb.-in. per pair of rails. Section modulus is17.80, RBM is 2,132,000 in-lbs per rail. Frame rail availability may be restricted based upon application, axle/suspension capacity, fifth wheel setting, or component/dimensional specifications. The results of the engineering review may result in a change to the requested frame rail. If a change is required Kenworth Application Engineering will advise the dealer of the appropriate material specification for a substitute rail.

Bumper: Aerodynamic Chrome Requires a bumper
setting code.

40.9 in. Bumper setting. Requires a bumper code.

Removable Front Tow Hooks: 2.

Front mudflaps.

Custom Frame Layout: one chassis

Battery box: Narrow steel parallel under cab
with aluminum diamond plate cover with step. LH under cab. Battery box is 150 mm narrower than the standard battery box. Use with two or three batteries and small round DEF tank LH under cab. Air tanks will be frame mounted. Air dryer must be frame mounted or under the hood. Use with RH under exhaust.

Battery box location: LH Side.

Five-piece bolted crossmember assembly with 12mm
frame fasteners, center and rear frame.

Bolted Rear Cab Support Crossmember.
Replaces T3 standard.

Square end-of-frame w/o crossmember; non-towing.

Fuel Tanks & Equip

Fuel Tank: 75 US gallon 24.5in. aluminum under

replace. Class 8 fuel tanks w/o locking caps include an anti-siphon device on the filler neck.

Small round DEF tank. 11 gallons of
usable volume. The DEF tank will be located on the side you specified. If you have specific configuration or body builder concerns, please utilize the Custom Frame Layout option. Standard capacity is calculated by fuel capacity of the vehicle and will accommodate two diesel fill-ups for every DEF fill-up. For 1:1 DEF fuel fill ratio, add 7889204.

Fuel Tank Steps: 6in. wide upper & lower F/1 RH
under round tank 24.5in. NFPA Compliant. Includes fuel tank crossbrace.

Polish only one aluminum tank.

Polished cover for 1 DEF tank any size.

Polished stainless steel tank straps for 1 tank.

Standard DEF to fuel fill ratio: 2:1 or greater.

DEF tank location is on the LH.

Location: 75 gal fuel tank RH under cab

Cab & Equipment

Cab: Curved Glass Conventional.
Cab Includes aluminum & fiberglass fully hucked cab w/ all aluminum bulkhead doors & continuous stainless steel piano-style door hinges. Single electric horn standard. Incandescent exterior lights include diagnosable bulb detection and warning. Trailer cable on tractors includes integrity detection. Standard features include multiplex wiring for interior lights, automated pre-trip inspection, short and open check diagnostics. Warning alarm will sound when lights are left on.

Hood: Sloped aerodynamic hood includes
grill & separate bumper.

Cab heater: W/integral defrosters & A/C 45,000
btu cab heater. No sleeper heater/AC. Includes 5 mode rotary control. T660 include filter media.

Adjustable telescoping tilt steering column.

Four position ignition switch, keyless.

Available for fire truck service & EMT/emergency service only.

Gauge: Dash mounted air filter restriction gauge.

Instrument package: Includes speedometer,
tachometer, fuel gauge, engine coolant temperature gauge, engine oil pressure, voltmeter. Class 8 also includes primary & secondary air reservoir gauges & an air application gauge. DEF level gauge and warning lamp are included with 2010+ engines. Engine hour meter and outside air temperature readouts are standard. Primary read out will be MPH. Add 8240620 to switch primary scale to KPH in Canada.

Joplin Fire Department

Ferrara 2-Door Kenworth T370 Heavy Rescue

Cab interior: Pinnacle. Includes vinyl headliner
& cab back panel, slate gray interior, dark slate gray seats, floormats, LH/RH inside sunvisor & door courtesy lights.

Driver seat: Kenworth Air cushion Plus HB vinyl.
Standard features includes 7 in. fore and aft slide adjustment w/isolator, 6-23 degree recline, air suspension with cover, dual armrests, and single chamber air lumbar support. Seat cushion is 20 inches wide w/ 2-position tilt and 2-position front cushion extension. Seat material has a horizontal stitch pattern and is 2-tone in color. Seat back is carpeted and includes a map pocket. Seat is manufactured by National. Includes inside visor and retractable 3-point matching seat belts. Grey seat belts.

Rider seat: Kenworth Toolbox Plus HB vinyl.
Standard features include fixed base and backrest, tool box seat base w/ door, and dual armrests. Seat cushion is 19.5 inches. Seat material has a horizontal stitch pattern and is 2-tone in color. Seat back is carpeted with a map pocket. Seat is manufactured by National. Includes inside visor and retractable 3-point matching seat belts. Grey seat belts.

NFPA Compliance Kit: Includes seat occupancy
sensors. Seat belt switches, VDR & seat sensor harness, reflective labels, and a second copy of operators manual.

Kenworth Radio Bluetooth: FM/WB/USB and Bluetooth
ashtray, 1 lighter, 1 12V outlet & a storage compartment.

Dome lamp over driver door.

Self cancelling turn signal: W/head light dimmer
switch .

Cab access contoured grabhandles, LH/RH.

LH & RH NFPA Compliant Grabhandles

Daylite Door: LH/RH includes RH peeper window

Solenoid, switch & wiring for customer-installed
air horn on T300 chassis. If the chassis has hydraulic brakes, it will require code 1000307 for Accessory air system for hydraulic brakes.

Look-Down, Pass. Door, Stainless 8.5x4.4

Mirror: Dual Kenworth aerodynamic heated
motorized 7 in. x 13 in. mirror w/ chrome shell. LH/RH convex mirrors 5 in. x 7 in. heated. Mirror brackets set for 8 1/2 ft load width. Switch located on door pad.

Electric-powered LH & RH door window lifts.

Switch located on door.

Solid rear wall. Deletes rear cab window.

Exterior aerodynamic sunvisor w/ integral marker
lights.

Joplin Fire Department

Ferrara 2-Door Kenworth T370 Heavy Rescue

Lights & Instruments

Headlamps: Halogen Projector Low Beam, Halogen

Complex Reflector High Beam

Marker Lights: Five aerodynamic, LED mounted in
sunvisor.

Turn Signal Lights: Mounted on fender

LED Stop,Turn,Tail: With Two LED

Backup Lights and With An LED License Plate.

Daytime Running Lamps.

Body Builder Lighting Harness Coiled End Of Frame
For Additional Customer Installed Exterior Lighting. Harness Includes Circuits for Additional Customer Installed Tail Lamps, Turn Lamps, Stop Lamps, and Marker Lamps.

Circuit Breakers: Replacing fuses. Does not
apply to any 5-amp fuse box position. Brakers include stop/brake/turn, tail lamp, high & low beams, marker/clearance lamps, horn, fuel heat, gauges, air dryer, HVAC controls, panel lamps. Some circuits will remain fuses.

Air Equipment

Air Dryer Bendix AD-IS heated Puraguard

Moisture ejection valve: Two Bendix DV-2 drain
valves on service tanks use w/ AD-IS only. Heated.

Extended Warranty

Base Warranty - PACCAR PX-9 Engine
24 months / 250,000 miles / 402,336 km / 6250 hours.

Severe Service Medium-duty Warranty: 1-year/
50,000 miles.

Paint

Paint color number(s).
N97020 A - L0235 RED
N97040 B - 99 SUPER BLACK
N97200 FRAME N0001 BLACK

Bumper Unpainted

Day Cab Premium Paint

2 - Color Cust Design – Day Cab – Lo Complex

Must submit design for approval. A Custom Design and Color Layouts order form is required with all custom designs. When transmitting ETO Electronic Paint Order, please submit all custom forms to Kenworth Sales Department, Attn: Paint Coordinator. Custom paint designs will be reviewed on a case by case basis. Approval or disapproval is at the discretion of Kenworth Truck Company. Consult with your paint coordinator if the chassis paint sketch includes any of the following items: Items attached to the frame or below the frame are to be painted a color that is different than the frame paint color, Items attached to the cab or sleeper are to be painted a color that is different than the cab or sleeper paint color, The requested paint number cannot be identified as a number or type approved by Kenworth.

Base coat/clear coat.
The Kenworth Color Selector contains additional instructions, as well as information on Kenworth paint guidelines and surface finish applications. Kenworth is standard with Dupont Imron Elite paint.

RELOCATE TOW HOOKS

The tow hooks provided on the commercial chassis shall be relocated. The exact location shall be determined at the pre-construction meeting.

FRONT BUMPER EXTENSION

There shall be a twenty-eight six (26”) frame extension provided. The extension shall be made from heavy-duty steel in both C-channel and tubular shapes. The frame rail extension material shall measure 7” high x 3-1/2” wide x .375” wall thickness.

The extension rails shall be bolted to the chassis frame rails through reinforcement plates, backed by the engine mounting cross member. Fasteners utilized shall be Grade 8 bolts.

GRAVELSHIELD

A gravelshield constructed of 1/8" (.125") embossed aluminum tread plate shall be installed above the frame extension between the bumper and the front face of the cab.

RECEIVER HITCH, BELOW FRONT BUMPER

One-(1) Class 4 receiver hitch shall be installed below the front bumper centered between the frame rails utilizing grade eight bolts.

There shall be one-(1) 12v quick connect battery powered lead wired to the chassis electrical system to supply a portable winch. The connector shall be located at the receiver location.

A safety sign FAMA28, shall be located on or near the receiver or anchor stating the maximum straight line pull rating.

RECEIVER HITCHES, LEFT/RIGHT SIDE OF BODY

Two-(2) Class 4 receiver hitches shall be installed, one-(1) each side in the forward portion fo the the left and right side body wheel wells utilizing grade eight bolts.

A safety sign FAMA28, shall be located on or near each receiver or anchor stating the maximum straight line pull rating.

RECEIVER HITCH, BELOW REAR BUMPER

One-(1) Class 4 receiver hitch shall be installed below the rear bumper utilizing grade eight bolts.

A safety sign FAMA28, shall be located on or near the receiver or anchor stating the maximum straight line pull rating.

12 VOLT WINCH QUICK CONNECTS

There shall be three-(3) 12v quick connect battery powered leads wired to the chassis electrical system to supply a portable winch. The connectors shall be located, one-(1) at each receiver location.

MECHANICAL SIREN

One (1) Federal Signal Q2B siren model #Q2B-012PSD electro-mechanical siren shall be mounted on the extended front bumper, driver's side outboard. The Q2B siren shall be a streamlined, chrome plated siren designed to provide reliable and long-life operation. The electro-mechanical siren shall produce the distinctive Q2B sound that is a registered trademark of Federal Signal, and shall be provided with a heavy duty clutch and an electric brake.

The Q2B siren shall measure 10.5” high x 14” long x 10” deep and shall produce 123 decibels at ten feet. The siren shall operate off the vehicles 12V system. The Q2B siren shall be pedestal mounted in the front of emergency vehicles.

The siren brake switch shall be located within reach of the driver.

SIREN WIRING

The siren activation switch shall be wired thru the chassis park brake and operate in the "Response Mode" only.

SIREN FOOT SWITCHES

Two-(2) foot operated switches shall be installed, one-(1) on each side on the driver and officer's side wired to the mechanical siren.

AIR HORNS

There shall be two-(2) 24" Grover air horns installed in compliance with NFPA on the front fenders one-(1) each side, plumbed to the chassis air supply system thru an air protection valve, manufactured from spun brass material with an easily separated die cast sounding unit for serviceability.

AIR HORN FOOT SWITCHES

Two-(2) foot operated switches shall be installed, one (1) on each side on the driver and officer's side wired to the air horn(s).

AIR HORN WIRING

The air horns shall be active in both the "Scene" and "Response Mode".

SPEAKERS

Two driver's side speakers shall be a Whelen Projector model SA315P wired to the electronic siren. The all-weather siren speaker shall incorporate a 100 watt front loaded speaker driver installed in an all-weather black nylon composite base.

MUD FLAPS, FRONT

The front axle mud flaps shall be constructed from hard black rubber and installed behind the tires.

TIRE PRESSURE MONITORING SYSTEM

Each tire installed on the apparatus shall be equipped with a tire pressure monitoring device. The device shall consist of a valve stem cap to with an LED tire alert to indicate tire pressure conditions. The LED shall flash when the tire drops 8 psi below the factory setting.

STAINLESS STEEL WHEEL TRIM

The front and rear axle wheels shall be trimmed with stainless steel hub and lug nut covers. The front axle's hub cover shall be equipped with holes for oil level viewing.

TIRE CHAINS, AUTOMATIC

The rear axle shall be equipped with an ON-SPOT automatic tire chain system. The system shall provide instant traction at the touch of a switch, without having to stop the vehicle.

The driver's dash shall have an electric control switch, clearly labeled for operation of the tire chains. The switch shall be provided with a guard to prevent accidental deployment of the tire chains. The switch when activated shall open a frame mounted solenoid, allowing air from the chassis air system to enter the spring loaded air cylinder and lower the chain wheel. The rubber covered chain wheel shall contact the inside of the tire causing the chain wheel to rotate and deploy the chains. The ON-SPOT automatic chains shall have six-(6) lengths of chain, spaced at 60-degree intervals on the chain wheel, ensuring two chains between the tire and road surface for instant traction in slippery conditions whether accelerating, braking, or in a wheel lock up condition. The ON-SPOT chains can be activated with speeds of 2 MPH to 25 MPH. The ON-SPOT chains shall be operable in either forward or reverse for speeds up to 35 MPH.

When the chains are no longer needed the process is reversed, the dash board switch is turned of and the air is exhausted from the cylinder. The return springs in the air cylinder brings the chain wheels back to their resting position.

AIR AUTO-EJECT

The chassis shall be equipped with a KUSSMAUL 091-28 automatic airline disconnects. The Air Eject shall be wired so that when the vehicle is started the Air Eject automatically disconnects the airline thus preventing the vehicle from being driven away with the airline connected.

A Kussmaul weatherproof adapter kit shall provide a recessed mounting for the Air Eject.

The air auto-eject shall be piped through a check valve to the "wet" air reservoir of the chassis. This connection shall maintain the apparatus air system from a shop air source.
The Air Eject cover shall be a Kussmaul 091-55RD, red in color.
One (1) twenty-five (25)-ft. length(s) of air hose shall be furnished with fittings.

An air chuck shall be provided with the air hose. The air chuck shall fit the valve stems that are provided on the tires.

AIR COMPRESSOR/BATTERY CHARGER

A Kussmaul Pump Plus 1200 air compressor and battery charger package Model 091-9-12V-1200 shall be installed. The Auto Pump 12 volt driven air compressor shall ensure that the air brake system is properly pressurized for immediate response of the unit. A pressure switch shall regulate operation and shall automatically sense low air pressure in the brake system and restore the proper pressure. The unit shall have no interference with the vehicle mounted air compressor. The compact compressor shall have sealed bearings and a 15 amp circuit breaker installed in pressure switch assembly. The air compressor power mode selector switch shall select: 1) DC power full time from vehicle battery 2) AC powered only from the battery when vehicle is plugged into shore power and automatically shuts off air compressor when disconnected from shore power.

The air compressor shall have the following ratings:
1) 100 PSI maximum rating
2) Pre-set at 75 PSI "ON" and 95 PSI "OFF"
3) Adjustable differential range of 20 PSI to 100 PSI
4) Output:
   0.30 SCFM @ 80 PSI
   0.35 SCFM @ 60 PSI
5) Rating: 12 volt at 11 amps

The battery charger shall be a Pump Plus 1200 Series 40 amp high output battery charger shall be installed.

The charger shall have the following operational specifications:
a) 120 volts AC input at 10 amps
b) 12 volts DC output at 40 amps

The battery charger shall supply a 'single battery bank' with automatic operation and with an aluminum enclosure. The system shall have a built-in sense circuit to check battery voltage 120 times a second; the system shall compensate for voltage drop in charging wires and provide quick recharging with no over-charging. The unit shall include front panel connections for a remote display and auxiliary loads.

The battery charging system shall be located within the cab behind the driver's seat.

SUPER AUTO-EJECT(S), 20 AMP

There shall be provided one (1) super auto-eject type receptacle(s) model 091-55-20. A solenoid wired to the vehicle starter is energized when the engine is started. This instantaneously drives the plug from the receptacle. The receptacle shall be provided with a weatherproof cover. The cover shall be spring loaded to close, preventing water from entering when the shoreline is not connected. The super auto eject receptacle shall be mounted in a location specified by the department and is designed to accept a 120V AC from a shoreline plug.

The UL maximum allowable amperage draw on receptacles is generally 80% of their listed rating, for example, the 20-amp receptacle should not carry more than 16-amp continuous load. When adding the different amperage draws of the

components being installed on the chassis, be sure to figure in whether the components shall draw a continuous load or intermittent load.
The receptacle shall be located on the driver's side front body corner.
The Auto Eject cover(s) shall be a Kussmaul 091-55YW, yellow in color.

DISPLAY, BAR GRAPH

The charger shall include a model 091-199-001 remote bar graph display.
The remote bar graph display shall be located on the driver's seat rider next to the master battery switch.

SHORE POWER INLET PLATE

A shore-power "Inlet Plate" shall be permanently affixed at or near the power inlet.

The plate shall indicate the following:

- Type of Line Voltage
- Current Rating in Amps
- Power Inlet Type (DC or AC)

EXHAUST SYSTEM

The chassis exhaust pipe and muffler shall be extended to the front of the right rear wheel. Any required heat shields to protect body and/or compartments shall be installed.

DELUXE CHASSIS TRIM PACKAGE

The chassis battery box, fuel tank, and cab steps shall be individually covered with 1/8" (.125") aluminum tread plate.

CENTER CAB CONSOLE

There shall be a custom console installed in the apparatus fabricated from smooth aluminum plate. The design and location of this console shall be determined by the customer. The console shall be sprayed with F-Shield coating.

REFLECTIVE DOOR STRIPING

There shall be 96 square inches of a single color reflective material installed on the inside lower panel of each cab door.

VEHICLE DATA RECORDER

Apparatus shall be equipped with a "Vehicle Data Recorder and Seat Belt Warning System" (VDR/SBW) that is connected to the power train CAN (Controller Area Network) bus consisting of transmission (TCM), engine control (ECM) and anti-lock brake (ABS) modules mounted on the apparatus.

The VDR/SBW shall function per NFPA 1901-2009 sections 4.11 (Vehicle Data Recorder) utilizing the power train's J1939 data and 14.1.3.10 (Seat Belt Warning) using the Class1 "Seat Belt Input Module" for seat occupied and belt status information.

The SBW system shall have the ability to use either normally open (NO) or normally closed (NC) switches (user selectable by "dip switches" at ground potential) for operation. A choice of two different visual displays for Seat Belt Warning shall be available.

The VDR data shall be downloadable by USB cable to a computer using either Microsoft ™ or Apple ™ Operating Systems using Class 1/ OEM supplied reporting software.

LIGHT, BATTERY ON

A green battery on pilot light shall be located in the cab visible from the driver's position. This light shall be wired to the master battery switch.

LIGHT, IGNITION ON

A green ignition on light shall be located in the cab to indicate power to the ignition.

MASTER LOAD DISCONNECT

A master load disconnect shall be provided between the starter solenoid and the remainder of the electrical loads on the apparatus. The batteries shall be connected directly to the starter solenoid.

LOAD MANAGER

The apparatus shall be equipped with a Load Manager System for performing electrical load management. The Load Manager shall have two-(2) modes of operation, a "Calling Right of Way" mode, and a "Blocking Right of Way" mode. The "Blocking Right of Way" mode is activated only when the park brake is set. Load shedding may occur "only" in the "Blocking Right of Way" mode also when the battery voltage level reaches your programmed shed level.

This system shall be designed to activate a fast idle system with low voltage alarm that activates at the NFPA required 11.8 volts.

MASTER LIGHT SWITCH PANEL

All warning lights shall be switched from a master light switch panel mounted in the cab. This panel shall have a master light cutoff switch.

RADIO ANTENNA MOUNT(S)

There shall be two (2) standard antenna-mounting base(s), model MNO, with 17 feet of coax cable and weatherproof cap provided for a two (2)-way radio installation. The mount(s) shall be located on the cab roof, just to the rear of the light bar. The cable(s) shall be routed under the officer's seat.

POWER AND GROUND STUDS

The electrical distribution panel shall include three (3) power studs. The studs shall be size #10 and each of the power studs shall be circuit protected with a fuse of the specified amperage. One (1) power stud shall be capable of carrying up to a 60 amp battery direct load, one (1) power stud shall be capable of carrying up to a 60 amp ignition switched load and one (1) power stud shall be capable of carrying up to a 40 amp ignition switched load. The three (3) power studs shall share one (1) #10 ground stud.

ELECTRONIC SIREN

There shall be one-(1) Whelen model 295HFS2 hands free siren control head mounted in the cab. The 295HFS2 shall incorporate a 12V/200W remote siren amplifier on an aluminum alloy chassis covered by an aluminum alloy housing with a powder coated black top for maximum protection. The 295HFS2 shall be furnished with a flush mount black polycarbonate powder coated control head. The 295HFS2 shall have the ability for either 100 or 200 watt output. The

front overlay of the control head shall be made of a black polycarbonate and powder coated. The lettering and artwork on the overlay shall be illuminated with adjustable backlighting of soft LED non-glaring green. The control head operating controls will consist of a power switch, manual button, and a function rotary switch. The control head shall include a 20A/32V fuse. The microphone shall be hardwired to the 295HFS2. The 295HFS2 PC board shall have input polarity protection, output short circuit protection. The solid state siren speaker amplifier shall be vibration resistant.

The 295HFS2 shall have four Scan-Lock™ siren tones with two manual functions for additional siren tones. The siren amplifier shall have the ability to customize the placement of each siren tone with the rotary switch. The siren amplifier shall have a “Siren in Use” icon driver and adjustable preset repeat radio volume. The PTT (push to talk) switch on the microphone shall override all siren functions. The 295HFS2 shall have a combination On/Off and horn ring transfer switch with Bi-polarity horn/ring activation control. The 295HFS2 shall have SI Test® capability to perform a complete diagnostic silent test of amplifier and speaker(s). The siren amplifier shall have a quick disconnect plug. The 295HFS2 shall have the ability to activate siren tones with “Aux Enable” input either with a slide switch, power controls, or relay-to-ground connector. The 295HFS2 shall meet Class A requirement for SAE, AMECA, KKK1822, and California Title XII. The sire amplifier shall include stainless steel hardware for installation. The 295HFS2 is covered by a five year factory warranty.

SWITCH, HORN/SIREN SELECTOR

A driver controlled horn/siren selector switch shall be installed in the cab and operate either the electric siren or chassis electric horn through the horn ring button.

{Bidder Comply}

LIGHT, DOOR AJAR

A red door ajar LED flashing light shall be mounted in the cab within view of the driver.

The light circuit shall be wired so that the light circuit is deactivated when the parking brakes of the apparatus are applied.

A label shall be applied adjacent to the light 'DOOR OPEN'.

LIGHTS, ENGINE MAINTENANCE

Two-(2) white 4" LED round lights shall be mounted under the cab. The lights shall activated by a switch located under the hood.

LIGHTS, CAB GROUND

There shall be one-(1) Whelen 2G Series model 20C0CDCD 4" LED light mounted under each cab door illuminating the area below providing a safe entrance and exit for cab occupants. All cab ground lights shall automatically activate when any cab door is opened and by a switch located on the dash.

The 12v steady burn light(s) shall incorporate 12 clear LED and a clear optic hard coated polycarbonate lens. The hard coated lens shall provide extended life/luster protection against UV and chemical stresses. The encapsulated coated PC board and lens fitted with foam in place gasket assembly shall provide additional protection against environmental elements. The solid state light shall be vibration resistant. The 20C0CDCD will contain 350 usable lumens. An

installation kit including mounting hardware and rubber gasket shall be provided. The 20C0CDCD will contain a 12" terminated pigtail with a waterproof Deutsch® connector. The light is covered by a five year factory warranty.

HEADSET INTERCOM SYSTEM

A David Clark 3800 series intercom system shall be installed to provide noise suppression while providing clear voice communications for four-(4) seated positions in the cab. There shall be an additional headset connection provided at the pump panel.

Communications are provided by two-(2) 3800 series under the helmet headsets. This system includes:

- MS Connectors 6-Socket
- Power Cord
- 12' Jumper Cord
- 25' Jumper Cord
- Connector Kit
- Protective Caps w/Cord

The driver and officer headsets include the intercom and two-way radio communication functions, while the crew headsets are capable of intercom communications and radio communications listening.

MASTER INTERCOM STATION

One master station shall be provided. The U3800 accommodates two headsets and placed where radio transmit function is not required, adjusts automatically for 12 or 24 VDC power source. Contains system on/off, master volume control, two headset jacks with listen level controls, power input connector, and two remote output connectors. System draws less than 600 milliampere of current.

MOBILE RADIO INTERFACE CORDS

The intercom system shall be provided with one (1) radio interface cables between the Departments radio and the David Clark system for the specified location.

Customer must specify make and model radio.

DRIVER'S HEADSET STATION

There shall be one model U3815 interface module provided for the driver's position. The module combines the transmit/receive functions of a mobile radio. This module has one headset jack with listen level control, one PTT switch, one radio input connector (C3821), two intercom connectors (C38-XX) and one connector allowing use of an optional Foot switch (40017G-04) or other remote PTT.

OFFICER'S HEADSET STATION

There shall be one model U3811 interface module provided for the officer's position. This module provides isolated radio transmit function for one headset and radio receive function for all users. This unit contains one radio PTT switch, one headset jack and listen level control, one system input connection, and one radio input connection.

SINGLE EAR HEADSETS

There shall be one (1) single ear model H3441 headset provided for the one-(1) for each station. The headset shall provide a single plug under helmet radio transmit headset. The headset shall come with an adjustable volume, noise canceling electric microphone, adjustable head strap, and flexible style boom for rotation of right or left dress. It shall have an on/off button located on the microphone. The headset shall provide high clarity speakers and fully shielded EMI/RFI protected 5' coil cord. The headset shall have gel foam ear seals and provide 23 dB of noise reduction.

Each headset shall have a one-(1) year warranty.

DUAL EAR HEADSETS

There shall be one (1) dual ear model H3442 headset provided for the one-(1) for each station. The headset shall provide a single plug under helmet radio transmit headset. The headset shall come with an adjustable volume, noise canceling electric microphone, adjustable head strap, and flexible style boom for rotation of right or left dress. It shall have an on/off button located on the microphone. The headset shall provide high clarity speakers and fully shielded EMI/RFI protected 5' coil cord. The headset shall have gel foam ear seals and provide 23 dB of noise reduction.

Each headset shall have a one-(1) year warranty.

HEADSET HOOKS

There shall be two (2) headset hooks installed one for each station.

BACK UP CAMERA SYSTEM

One-(1) Federal Signal model CAMSET-70 color camera system shall be installed on the vehicle. The system shall be wired to the vehicles 12 volt electrical system. The 7" LCD color monitor shall be installed in cab in easy reach of the driver while in the seated position. The color camera shall be installed facing rearward giving a clear and unobstructed view behind the vehicle. The system shall activate when the transmission is shifted in the reverse position. A switch located on the monitor shall activate the system regardless of the transmissions shifted position.

This system shall consist of the following components:

- One 7" CAMLCD color monitor installed in the cab
- One color camera model CAMCCD-REARNTSC with night vision and audio installed high at the rear of the vehicle
- 65.5 feet of camera-to-monitor extension cable (CAMCABLE-20)
- Multiple camera control box (CAMBOX-4NTSC/CAMBOX-PAL)
- Mounting bracket and hardware (CAMLCD-BRACKET)

SAFETY SIGNS, GENERAL REQUIREMENTS

Safety signs with text shall conform to the general principles of ANSI/NEMA Z535.4, *Product Safety Signs and Labels*. Safety signs without text shall conform to the general principles for two-panel safety signs of ISO 9244, *Earth-Moving Machinery - Machine Safety Labels*.

Apparatus built for sale in the United States shall employ safety signage that complies with ANSI/NEMA Z535.4.

Apparatus built for sale outside the United States shall employ safety signage that complies with ANSI/NEMA Z535.4 or ISO 9244.

Safety signs referenced in this standard beginning with the letters FAMA shall conform to the text and graphics of the referenced safety sign number found in FAMA TC010, *Standard Product Safety Sign Catalog for Automotive Fire Apparatus*.

SAFETY SIGNS, BATTERY EXPLOSION

A safety sign(s) FAMA01, shall be provided near the battery location that warns of potential injury or death that could be caused by the batteries. The label shall also state precautions that should be taken while working on or around the batteries.

SAFETY SIGNS, ROTATING SHAFTS

Safety signs FAMA02, shall be provided on each side of the frame rail and in any other location(s) where rotating shaft hazards are apparent. The label shall warn of potential injury or death that could be caused by the movement of the shaft(s) as well as precautions that should be taken while working on or around them.

SAFETY SIGNS, HOT SURFACES

Safety sign(s) FAMA03, shall be provided near any hot surface that warns of potential injury or death that could be caused by contact with the surface. The label shall also state precautions that should be taken while working on or around the surface.

SAFETY SIGNS, HOT EXHAUST

A safety sign FAMA04, shall be provided near any hot exhaust surface that warns of potential injury or death that could be caused by contact with the surface. The label shall also state precautions that should be taken while working on or around the surface.

SAFETY SIGN, SPINNING FAN

A safety sign FAMA05, shall be provided on both sides of the engine fan. The label shall warn of potential injury or death that could be caused by the movement of the fan as well as precautions that should be taken while working on or around them.

SAFETY SIGNS, SEATED & BELTED

Safety signs FAMA07, which warns of the importance of seat belt use, shall be visible from each seat that is intended to be occupied while the vehicle is in motion.

SAFETY SIGN, AIR CONDITIONING REFRIGERANT

If the apparatus is equipped with any type of air conditioning system, a safety sign FAMA09, shall be provided that is located in an area that would be visible to service personnel. The label shall state that the system contains R134A, the necessary precautions that should be taken and the dangers of working on or around the system.

SAFETY SIGN, CAB EQUIPMENT MOUNTING

A safety sign FAMA10, which warns of the need to secure items in the cab, shall be visible inside the cab.

SAFETY SIGN, FIRE SERVICE TIRE RATING

A safety sign FAMA12, which warns of the special requirements for fire service–rated tires, shall be visible to the driver entering the cab of any apparatus so equipped.

SAFETY SIGN, ELECTRONIC STABILITY CONTROL

If the apparatus is equipped with an electronic stability control system, a safety sign FAMA13, be provided inside of the cab in view of the driver warning of the dangers of improper operation of the apparatus and the importance of safe driving. The label shall also warn of potential injury or death that could be caused by improper operation of the apparatus.

SAFETY SIGN, CAB SEATING

A safety sign FAMA14 shall be located in the cab visible to the operator.

The sign shall read:
This vehicle has a seating capacity of 2 personnel.

Carrying additional personnel may result in death of serious injury.

SAFETY SIGNS, HELMET WORN IN CAB

A safety sign FAMA15, which warns not to wear helmets while the vehicle is in motion, shall be visible from each seat that is intended to be occupied while the vehicle is in motion.

SAFETY SIGN, VEHICLE BACKING

A safety sign FAMA17, shall be provided inside of the cab in view of the driver advising of proper procedures to following when the apparatus is in reverse motion. The label shall also warn of potential injury or death that be caused by failing to follow proper procedures.

SAFETY SIGNS, INTAKE/DISCHARGE CAP PRESSURES

If the apparatus is equipped with a pump system, safety signs FAMA18, shall be provided in all areas that intakes and discharges are capped. The label shall give instruction on how to properly remove the cap. The label shall also warn of potential dangers, injury or death that be caused by failing to follow proper cap removal procedures.

SAFETY SIGNS, HOSE RESTRAINT REQUIRED

A safety sign FAMA22, which warns of the need to secure hose, shall be visible to personnel at each hose storage area.

SAFETY SIGNS, CLIMBING METHOD INSTRUCTION

Safety signs FAMA23, which warns of the proper climbing method, shall be visible to personnel entering the cab and at each designated climbing location on the body.

SAFETY SIGNS, RIDING ON EXTERIOR

Safety signs FAMA24, which warns personnel not to ride on the vehicle, shall be located at the rear step areas and at any cross walkways.

SAFETY SIGN, PUMP TRAINING

A safety sign FAMA25, which warns of the need for training prior to operating the apparatus, shall be located on the pump operator's panel.

SAFETY SIGNS, NO-STEP

Safety signs FAMA26, shall be provided in any horizontal location that a firefighter may feel tempted to use as a step but is not designed, constructed or intended to be a stepping, standing or walking surface. The label shall state that the surface is not intended for this purpose and indicate potential injury or death in doing so.

SAFETY SIGN, SIREN NOISE

A safety sign FAMA42, shall be provided inside the driver's door warning of potential injury that could be received from the noise of the siren. The label shall also state safety precautions that should be taken when the siren is in use.

SAFETY SIGN, APPARATUS MOVEMENT

A permanently affixed movement warning plate shall be installed near the door ajar light that reads:

"DO NOT MOVE APPARATUS WHEN LIGHT IS ON".

PLATE, FLUID CAPACITY

A permanently affixed fluid date plate shall be installed in the driving compartment to indicate the type and quantities of the following fluid used in the vehicle.

Engine Oil
Engine Coolant
Chassis Transmission Fluid
Pump Transmission Lubrication Fluid (if applicable)
Pump Primer Fluid (if applicable)
Drive Axle Lubrication Fluid
Air Conditioning Refrigerant
Air Conditioning Lubrication Oil
Power Steering Fluid
Cab Tilt Mechanism Fluid
Transfer Case Fluid
Equipment Rack Fluid
Air Compressor System Lubricant
Generator System Lubricant
Front Tire Pressure - Cold
Rear Tire Pressure - Cold

The following information shall also be supplied on the Fluid Data Plate:

Chassis Manufacturer
Production Number
Paint Number
Year Built
Date Shipped
Vehicle Identification Number

PLATE, OVERALL HEIGHT/LENGTH/WEIGHT

An Overall Height/Length/Weight information plate shall be installed that can be clearly identified and visible to the driver while in the seated position showing the apparatus completed overall height, length, (in feet and inches) and gross vehicle weight (in tons) current to the apparatus manufactured date.

If changes to the vehicle occur while in service, the department must revise the overall height-length-weight plate.

RESCUE BODY, 102" WIDE

The rescue body shall be constructed entirely of aluminum plate and extrusions.

{Bidder Comply}

BODY LENGTH

The length of the body shell shall be 18.00' from front to back, excluding bumpers, steps or other ancillary components. Individual compartment dimensions shall be as described within the text for each compartment.

BODY SUBFRAME

The main body support cross member extrusions shall be 3" x 4" 6061T6 aluminum alloy, double "I" beam with a wall thickness of .438". These cross member shall extend the full width of the body to support the compartment framing, and welded to a .750" x 3" solid aluminum, 6061T6 aluminum alloy frame rail extrusion. The frame rail extrusion shall be shaped in contour with the chassis frame rails. The frame rail extrusion shall be mounted over a .250" thickness, reinforced rubber cushion to isolate the aluminum sub frame from the steel chassis frame rails. The body structure shall be securely fastened to the chassis frame rails with a minimum of six-(6) .625" OD, steel U-bolts. The main body support cross member shall have a gusset above and below each cross member. The gussets shall be constructed of 2.0" x 4.0" 6063T6 aluminum alloy extrusions with a .190" wall thickness. The gussets shall be continuously welded with 5356 aluminum alloy welding wire to add support to the body side walls.

BODY CONSTRUCTION

The framework shall be formed from beveled aluminum alloy extrusions and electrically seam welded both internally and externally at each joint using 5356 aluminum alloy welding wire. All aluminum extrusions shall be made from 6063T6 and 6061T6 aluminum alloy. Body sides shall be formed from 5052-H32 smooth aluminum plate. The horizontal surfaces above the compartment tops shall be constructed from aluminum tread plate. The compartment top shall have a formed edge which serves as a drip rail for the compartments below. The tops shall be mounted with stainless steel screws and removable.

The complete rescue body structure shall be all welded construction and free from nuts, bolts, and other fasteners. Upon completion of the weldments, the body shall be completely sanded and deburred for the removal of all sharp edges.

Each body corner shall be a 3-1/2" x 12-3/4" 6063T6 aluminum alloy extruded corner section with .210" wall thickness and welded as an integral part of the body. This extrusion shall have a large 1" corner radius.

The horizontal and vertical frame member extrusions shall be 2.0" x 4.0" with a .190" wall thickness. The extrusion shall be made from 6063T6 aluminum alloy. This extrusion shall have .190" outside radius corners. The longitudinal frame member, below the lower compartments shall be a 3" x 3-1/2" 6063T6 aluminum alloy extrusion with .190" radius corners.

COMPARTMENT CONSTRUCTION

All body compartment floors shall be formed from .1875" aluminum tread plate. The floors shall be welded in place with a continuous weld all around the perimeter to insure maximum strength and water tightness. The external compartment tops and roof shall be constructed of .125" aluminum tread plate. The compartment tops shall be bolted in place to allow ease of removal for easy access to the body wiring harnesses. The compartment side walls shall be of one piece construction. The walls shall be formed from .1875" 5052-H32 smooth aluminum plate. Lower compartments shall have a minimum of two-(2) solid welded saddles under the compartment floor.

The compartment seams shall be sealed with permanent pliable silicone caulking and each compartment shall be louvered to provide adequate ventilation.

WHEEL WELL PANELS, PAINTED ALUMINUM

The wheel well shall be constructed from 2" x 4" x .190" wall thickness. The extrusion shall be made from 6063T6 aluminum alloy and have .190" outside radius corners. The extrusion shall be slotted the full length to permit an internal fit of 1/8" (.125") painted aluminum panels. The wheel well liners shall be constructed of 3003 H-14 smooth aluminum plates. They shall be bolted in place for ease of maintenance. The wheel well fenders shall be polished stainless steel.

COMPARTMENTS, LEFT SIDE

L1
There shall be one-(1) front compartment installed ahead of the rear axle. This compartment shall have one-(1) roll-up door. The compartment shall be approximately 42" wide x 70" high x 29" deep in the lower and transverse in the upper. The compartment shall have a usable door opening of approximately 39-1/2" wide x 61-1/4" high.

L2
There shall be second front compartment installed ahead of the rear axle. This compartment shall have one-(1) roll-up door. The compartment shall be approximately 42" wide x 70" high x 29" deep in the lower and transverse in the upper. The compartment shall have a usable door opening of approximately 39-1/2" wide x 61-1/4" high.

L3
There shall be one-(1) compartment installed above the wheel well. This compartment shall have one-(1) roll-up door. The compartment shall be approximately 58" wide x 38" high x transverse. The compartment shall have a usable door opening of approximately 55-1/2" wide x 29-1/4" high.

L4
There shall be one-(1) rear compartment installed behind the rear axle. This compartment shall have one-(1) roll-up door. The compartment shall be approximately 43" wide x 70" high x 29" deep. The compartment shall have a usable door opening of approximately 40-1/2" wide x 61-1/4" high.

COMPARTMENT DOORS, LEFT SIDE ROLL UP

R•O•M Series IV roll-up shutter doors shall be installed on the left side compartments of the apparatus as specified.

Shutter slats will feature a double wall extrusion 0.315" thick with a concave interior surface to minimize loose equipment jamming the shutter door closed. Shutter slats will feature an interlocking end shoe to prevent side to side binding of the shutter door during operation. Slats must have interlocking joints with an inverted locking flange. Slat inner seal shall be a one piece PVC extrusion; seal design will be such to prevent metal to metal contact while minimizing dirt and water from entering the compartment.

Shutter door track shall be one piece design with integral overlapping flange to provide a clean finished look without the need of caulk. Door track shall feature an extruded Santoprene rubber double lip low profile side seal with a silicone co-extruded back to reduce friction during shutter operation.

Shutter bottom rail shall be a one piece double wall extrusion with integrated finger pull. Finger pull shall be curved upward with a linear striated surface to improve operator grip while operating the shutter door. Bottom rail shall have a smooth contoured interior surface to prevent loose equipment from jamming the shutter door. Bottom rail seal shall be made from Santoprene; it will be a double "V" seal to prevent water and debris from entering compartment. Bottom rail lift bar shall be a one piece "D" shaped aluminum extrusion with linear striations to improve operator grip during operation. Lift bar shall have a wall thickness of 0.125". Lift bar shall be supported by no less than two pivot blocks; pivot blocks shall be constructed from Type 66 Glass filled reinforced nylon for superior strength. Bottom rail end blocks shall have incorporated drain holes which will allow any moisture that collects inside the extrusion to drain out.

Shutter door shall have an enclosed counter balance system. Counter balance system shall be 4" in diameter and held in place by 2 heavy duty 18 gauge zinc plated plates. Counter balance system shall have 2 over-molded rubber guide wheels to provide a smooth transition from vertical track to counter balance system; no foam material of any kind shall be permitted or used in this area.

The shutter door assembly shall be manufactured and assembled in the United States.

There shall be an aluminum drip rail above each compartment door with a built in replaceable wiper seal.
The outside door shall have a natural finish.

There shall be an anodized aluminum sill plate installed over the compartment door.

The side compartment roll-up door slats and doorframe extrusions shall be finish painted to match the body.

ELECTRONIC/KEYED COMPARTMENT DOOR LOCKS

An electronic/ keyed lock shall be furnished for all compartment doors. All door compartment electronic locks will be wired to activate with the apparatus door locks. Each compartment will additionally have a keyed override to the electronic lock, these locks shall all be keyed alike

COMPARTMENTS, RIGHT SIDE

R1
There shall be one-(1) front compartment installed ahead of the rear axle. This compartment shall have one-(1) roll-up door. The compartment shall be approximately 42" wide x 70" high x 29" deep in the lower and transverse in the upper. The compartment shall have a usable door opening of approximately 39-1/2" wide x 61-1/4" high.

R2

There shall be second front compartment installed ahead of the rear axle. This compartment shall have one-(1) roll-up door. The compartment shall be approximately 42" wide x 70" high x 29" deep in the lower and transverse in the upper. The compartment shall have a usable door opening of approximately 39-1/2" wide x 61-1/4" high.

R3
There shall be one-(1) compartment installed above the wheel well. This compartment shall have one-(1) roll-up door. The compartment shall be approximately 58" wide x 38" high x transverse. The compartment shall have a usable door opening of approximately 55-1/2" wide x 29-1/4" high.

R4
There shall be one-(1) rear compartment installed behind the rear axle. This compartment shall have one-(1) roll-up door. The compartment shall be approximately 43" wide x 70" high x 29" deep. The compartment shall have a usable door opening of approximately 40-1/2" wide x 61-1/4" high.

COMPARTMENT DOORS, RIGHT SIDE ROLL UP

R•O•M Series IV roll-up shutter doors shall be installed on the right side compartments of the apparatus as specified.

Shutter slats will feature a double wall extrusion 0.315” thick with a concave interior surface to minimize loose equipment jamming the shutter door closed. Shutter slats will feature an interlocking end shoe to prevent side to side binding of the shutter door during operation. Slats must have interlocking joints with an inverted locking flange. Slat inner seal shall be a one piece PVC extrusion; seal design will be such to prevent metal to metal contact while minimizing dirt and water from entering the compartment.

Shutter door track shall be one piece design with integral overlapping flange to provide a clean finished look without the need of caulk. Door track shall feature an extruded Santoprene rubber double lip low profile side seal with a silicone co-extruded back to reduce friction during shutter operation.

Shutter bottom rail shall be a one piece double wall extrusion with integrated finger pull. Finger pull shall be curved upward with a linear striated surface to improve operator grip while operating the shutter door. Bottom rail shall have a smooth contoured interior surface to prevent loose equipment from jamming the shutter door. Bottom rail seal shall be made from Santoprene; it will be a double “V” seal to prevent water and debris from entering compartment. Bottom rail lift bar shall be a one piece “D” shaped aluminum extrusion with linear striations to improve operator grip during operation. Lift bar shall have a wall thickness of 0.125”. Lift bar shall be supported by no less than two pivot blocks; pivot blocks shall be constructed from Type 66 Glass filled reinforced nylon for superior strength. Bottom rail end blocks shall have incorporated drain holes which will allow any moisture that collects inside the extrusion to drain out.

Shutter door shall have an enclosed counter balance system. Counter balance system shall be 4” in diameter and held in place by 2 heavy duty 18 gauge zinc plated plates. Counter balance system shall have 2 over-molded rubber guide wheels to provide a smooth transition from vertical track to counter balance system; no foam material of any kind shall be permitted or used in this area.

The shutter door assembly shall be manufactured and assembled in the United States.

There shall be an aluminum drip rail above each compartment door with a built in replaceable wiper seal.

The side compartment roll-up door slats and doorframe extrusions shall be finish painted to match the body.

ELECTRONIC/KEYED COMPARTMENT DOOR LOCKS

An electronic/ keyed lock shall be furnished for all compartment doors. All door compartment electronic locks will be wired to activate with the apparatus door locks. Each compartment will additionally have a keyed override to the electronic lock, these locks shall all be keyed alike

COMPARTMENT, CENTER REAR

B1

There shall be one-(1) front compartment installed at the rear of the apparatus. This compartment shall have one-(1) roll-up door. The compartment shall be approximately 38" wide x 70" high x 46" deep. The compartment shall have a usable door opening of approximately 35-1/2" wide x 61-1/4" high.

COMPARTMENT DOORS, REAR ROLL UP

A R•O•M Series IV roll-up shutter door shall be installed on the rear compartment of the apparatus.

Shutter slats will feature a double wall extrusion 0.315” thick with a concave interior surface to minimize loose equipment jamming the shutter door closed. Shutter slats will feature an interlocking end shoe to prevent side to side binding of the shutter door during operation. Slats must have interlocking joints with an inverted locking flange. Slat inner seal shall be a one piece PVC extrusion; seal design will be such to prevent metal to metal contact while minimizing dirt and water from entering the compartment.

Shutter door track shall be one piece design with integral overlapping flange to provide a clean finished look without the need of caulk. Door track shall feature an extruded Santoprene rubber double lip low profile side seal with a silicone co-extruded back to reduce friction during shutter operation.

Shutter bottom rail shall be a one piece double wall extrusion with integrated finger pull. Finger pull shall be curved upward with a linear striated surface to improve operator grip while operating the shutter door. Bottom rail shall have a smooth contoured interior surface to prevent loose equipment from jamming the shutter door. Bottom rail seal shall be made from Santoprene; it will be a double “V” seal to prevent water and debris from entering compartment. Bottom rail lift bar shall be a one piece “D” shaped aluminum extrusion with linear striations to improve operator grip during operation. Lift bar shall have a wall thickness of 0.125”. Lift bar shall be supported by no less than two pivot blocks; pivot blocks shall be constructed from Type 66 Glass filled reinforced nylon for superior strength. Bottom rail end blocks shall have incorporated drain holes which will allow any moisture that collects inside the extrusion to drain out.

Shutter door shall have an enclosed counter balance system. Counter balance system shall be 4” in diameter and held in place by 2 heavy duty 18 gauge zinc plated plates. Counter balance system shall have 2 over-molded rubber guide wheels to provide a smooth transition from vertical track to counter balance system; no foam material of any kind shall be permitted or used in this area.

The shutter door assembly shall be manufactured and assembled in the United States.

There shall be an aluminum drip rail above each compartment door with a built in replaceable wiper seal.
There shall be an anodized aluminum sill plate installed over the compartment door.

The side compartment roll-up door slats and doorframe extrusions shall be finish painted to match the body.

ELECTRONIC/KEYED COMPARTMENT DOOR LOCKS

An electronic/ keyed lock shall be furnished for all compartment doors. All door compartment electronic locks will be wired to activate with the apparatus door locks. Each compartment will additionally have a keyed override to the electronic lock, these locks shall all be keyed alike

COMPARTMENTS, ROOF TOP STORAGE

Four-(4) roof top compartments shall be installed, two-(2) each side of the upper body. The compartments shall be constructed from same material as the body and shall be integral with the body. Each compartment shall have a door constructed from aluminum tread plate. The doors shall have a stainless steel piano type hinge and chest style latch. The interior compartment dimensions shall be determined by customer requirements for equipment storage and engineering. Compartments shall have a 1/2" flange around the opening to prevent water from entering the compartment when the door is closed. The doors shall be held open with gas shocks.

Each compartment shall have a grommet mount LED installed to the compartment inner door pan that activates when the door is open.

Each compartment shall have a grommet mount LED installed to the compartment inner door pan that activates when the door is open.

WHEEL WELL AIR BOTTLE COMPARTMENT, LEFT REAR

There shall be an air bottle compartment located in the left rear body wheel well to house two-(2) spare SCBA cylinders. The compartment shall be constructed of high-density polyethylene to provide scuff protection. The compartment shall be vented to facilitate moisture drainage. The compartment door shall be brushed stainless steel with a push button trigger latch.

WHEEL WELL AIR BOTTLE COMPARTMENT, RIGHT REAR

There shall be an air bottle compartment located in the right rear body wheel well to house two-(2) spare SCBA cylinders. The compartment shall be constructed of high-density polyethylene to provide scuff protection. The compartment shall be vented to facilitate moisture drainage. The compartment door shall be brushed stainless steel with a push button trigger latch.

BODY TRIM

The standard body trim shall include the following:

There shall be drip rail installed over the compartment door openings.

The vertical rear face of the body shall be covered with smooth aluminum plate.

TREAD PLATE FRONT OF BODYU

The entire front face of the body shall be covered with 1/8" (.125") thick aluminum tread plate. The tread plate shall be fastened to the body with stainless steel fasteners. A bead of caulking shall be applied to the perimeter of the tread plate.

MUD FLAPS, REAR

The rear axle mud flaps shall be constructed from hard black rubber and installed at the rear of the body fenders.

RUBRAIL

There shall be an aluminum rub rail installed on both sides of the lower body compartments. The rub rail shall be constructed from "C" channel extrusion. The aluminum rub rail shall be bolted in place with stainless steel bolts, and spaced from the fire body to provide body protection. The solid rub rail shall serve as protection to the side doors when encountering close objects. Tread plate rub rails or welded on shall not be acceptable.

REAR STEP

The 12" rear step shall be constructed of 3/16" (.1875") aluminum tread plate. The rear step shall be flanged down 2.50" and in 1.00" to maximize strength and rigidity. The rear step shall be bolted on for removal or replacement.

All running board and step surfaces shall comply with NFPA 1901.

ACCESS LADDER, REAR MOUNTED

A rear mounted access ladder shall be provided on the rear of the unit to facilitate access to the top portion of the apparatus. The ladder shall be constructed from aluminum tubing and mounted as directed by the department.

All step surfaces shall comply with NFPA 1901.

The access ladder shall be provided on the driver's side rear of the apparatus.

TOW EYES, REAR

Two-(2) 1" thick rear tow eyes constructed of A-36 steel shall be mounted below the frame at the rear of the vehicle. The tow eyes shall be attached to steel weldments that are mounted to the apparatus. The eyes shall have a minimum dimension of three-(3) inches. The tow eyes shall be used for towing, not lifting the vehicle.

COMPARTMENT UNISTRUTS

Nine (9) set(s) of aluminum unistruts shall be installed in the compartment(s) specified by the department for future installation of shelves or to allow the specified trays/tool boards to be adjustable.

There shall be one-(1) set of vertically mounted unistrut provided within each body compartment.

SHELF, ADJUSTABLE

There shall be two (2) 90" deep adjustable shelf (shelves) constructed from .1875 smooth aluminum. Each shelf shall have a 2" lip on all sides for additional strength.

These two-(2) full depth shelves shall be installed full width/depth of the engineers compartment (L1/R1).

SHELF, ADJUSTABLE

There shall be nine (9) 45" deep adjustable shelf (shelves) constructed from .1875 smooth aluminum. Each shelf shall have a 2" lip on all sides for additional strength.

Exact locations to be determined in the pre-construction conference.

TRAY(S), 1000 POUND ROLL OUT

There shall be four (4) 45" deep roll-out tray(s) constructed from 3/16" (.1875") smooth aluminum plate installed on the apparatus. The tray(s) shall have a 3" lip on all sides for additional strength. The tray(s) shall be mounted on Slide Master Slides with a combined capacity of 1000 pounds.

Exact locations to be determined in the pre-construction conference.

TOOL BOARD(S), VERTICAL ROLL OUT

There shall be four (4) vertical tool board(s) mounted in a specified compartment. Each tool board shall be manufactured from 3/16" smooth aluminum plate. The tool board(s) shall be approximately 45"deep x full height and designed to extend 100% of the slide length. One-(1) set of Grant 250-pound slides shall be installed per tool board.

Exact locations to be determined in the pre-construction conference.

COMPARTMENT FLOORING, TURTLE TILE

There shall be Turtle Tile installed on the compartment floor(s). The color of the tile shall be black. The Turtle Tile shall be completely removable for cleaning.

If the compartment has a roll out tray mounted directly on the floor, the Turtle Tile will be mounted in the tray.

SHELF/TRAY FLOORING, TURTLE TILE

There shall be Turtle Tile installed in the specified shelf or tray. The tile shall be black in color. The Turtle Tile shall be completely removable for cleaning.

ELECTRICAL SYSTEM

BODY ELECTRICAL

The body electrical system shall be designed as an integrated electrical package specifically engineered for fire apparatus application. The integrated electrical system shall be comprised of power distribution panels, which interface to the body and chassis through an engineered harnessing system.

All chassis wiring shall be type "GXL" in accordance with S.A.E. J1128 and NFPA-1901. Wiring shall be color coded and include function codes every three-(3) inches on both sides.

The electrical wiring harness shall be covered by a black split convoluted loom, rated at a minimum of 275º F.

DISTRIBUTION PANELS

The electrical distribution panels and circuits must be housed in each rear corner compartment or extrusion. The distribution panel shall incorporate a power and ground stud for connection to the internal circuits.

All internal wire end terminals, including locking bulkhead connectors, shall be mechanically affixed to the wire ends by machine terminal crimping presses. No hand-crimped terminals shall be acceptable.

All internal splices shall be ultrasonically welded connections - no butt style connections shall be acceptable. All internal wiring shall be of the high temperature GXL type wire and shall be protected by wiring duct wherever possible.

Each side electrical distribution panel shall consist of fifteen-(15) power distribution relays. The power distribution relays shall be replaceable, SPDT automotive style, rated at a minimum of 30 amperes.

The power distribution relays shall incorporate separate inputs, which are able to accept outputs from a load management system. The load management inputs must allow for the addition of a load management system before, during or after the time of delivery without requiring a rewiring of the existing distribution panel circuits.

Connections to the distribution panel shall utilize Deutsch style bulkhead connectors. Screw clamp type connections are not acceptable.

The distribution panel shall also contain circuit's ancillary to the required DOT signals and other body functions.

The complete body electrical system shall be 100% documented and contain independent circuit diagrams with point to point wiring information, as shall as a general component diagram included in the apparatus manual.

All electrical equipment switches shall be mounted on a switch panel mounted in the cab convenient to the driver. Light switches shall be of the marine grade rocker type with integral indicator light to show when lights are energized. All switches shall be appropriately identified.

12-VOLT TESTING

The apparatus low voltage system shall be tested and certified. A copy of certification shall be provided to the purchaser with the apparatus.

Reserve Capacity Test
The unit shall be run until all engines, engine compartment temperatures are stabilized and the battery system is fully charged. The engine shall be shut off and the minimum continuous electrical load be activated for ten-(10) minutes. All electrical loads shall be shutoff after ten-(10) minutes and the battery system shall then be capable of restarting the engine.

Alternator Performance Test at Idle
Minimum continuous electrical loads shall be activated while the unit is at idle speed.

Alternator Performance Test at Full Load
The total continuous electrical load shall be activated with the engine running up to the manufacturer's governed speed. The test duration shall be a minimum of two-(2) hours. Activation of the load management system shall be permitted during the test. If however, an alarm is sounded by excessive battery discharge as detected by the system or a system voltage of less than 11.8 volts DC for a 12-volt nominal system for more than 120 seconds, shall be considered a test failure.

Low Voltage Alarm Test
The engine shall be shut off and the total continuous electrical load shall be activated and continue to be applied until the excessive battery discharge alarm activates. The test shall be considered a failure if the alarm has not sounded within 140 seconds after the voltage drops to 11.8 volts.

WIRING PROTECTION

All 12-volt wiring shall be run in high temperature, rated at a minimum of 275º F, split loom for easy access to wires when trouble shooting.

EMI/RFI PROTECTION

The apparatus shall be manufactured to incorporate the latest designs in the electrical system with components that are state of the art to insure electromagnetic interference (EMI) and radio frequency interference (RFI) emissions are suppressed at the source.

The apparatus shall have the ability to operate in typical fire and rescue situations with no adverse effects from EMI and/or RFI.

The apparatus shall utilize components that are fully protected and wiring that utilizes shielding and loop backgrounds where required to control EMI/RFI susceptibility. The apparatus shall be bonded through ground straps. Relays and solenoids that are suspect to generating spurious electromagnetic radiation are diode and/or resistor protected to prevent transient voltage spikes.

In order to prevent the radio frequency interference completely the purchaser shall be requested to provide a listing of the type, power output, and frequencies of all radio and bio medical equipment that is proposed to be used on the apparatus.

BACK-UP ALARM

There shall be one-(1) Whelen model WBUA107, 107 dB, electronic back-up alarm installed at the rear of the apparatus. The alarm shall be wired to the transmissions output signal and is automatically activated when the transmission is shifted into reverse.

LIGHT(S), LED COMPARTMENT

Eighteen (18) On Scene Solutions Access Series LED surface mount light(s) shall be provided as specified by the customer. Each light produces 400 lumens if light per 18" length. Each Access Series shall be capable of operating at a voltage of 9VDC to 14VDC. Each Access Series shall be cuttable in 2" increments and feature a high quality, impact resistant Lexan™ enclosure.

The light stick shall be waterproof and rated at 100,000 hours of service. Each light stick shall be provided with a 5 year free replacement warranty.

Locations: There shall be two-(2) LED strip lights mounted vertically, one-(1) each side, within the door opening of each compartment.

DOOR AJAR SWITCHES

All apparatus body doors shall be provided with an auto door switch. These switches shall operate the compartment interior lights and activate the door ajar indicator on each side of apparatus body when the door is opened. There shall be a red door ajar light mounted in the cab, in view of the driver to indicate an unsecured door. There shall be a buzzer mounted in the cab that shall alert the driver.

LIGHTBAR, 55" WHELEN FREEDOM IV

A Whelen Edge Ultra Freedom IV Linear Super-LED LC Series 55" light bar model F4N2QLED shall be provided on the cab roof as far forward as possible. The F4N5QLED light bar shall incorporate an anodized extruded heavy duty aluminum base and cover chassis with two front red corner modules with two red end cap modules, two interior white modules, and four interior red modules. The front of each corner module shall consist of 12 red Linear Super-LEDs installed on a conformal coated PCB board with a thermal pad/aluminum bracket heat sink assembly. The short red end cap Linear Super-LED lights shall incorporate six red Super-LED installed on a conformal coated PCB board with a thermal pad/aluminum bracket heat sink assembly. The long red interior Linear Super-LED lights shall incorporate 12 red Super-LED installed on a conformal coated PCB board with a thermal pad/aluminum bracket heat sink assembly. The long white interior Linear Super-LED lights shall incorporate 12 white Super-LEDs installed on a conformal coated PCB board with a thermal pad/aluminum bracket heat sink assembly. The all modules will utilize a Diamond Optix metalized reflector and two optic collimators. All electronic components shall be conformal coated to provide additional protection. The outer lens construction shall consist of two clear Uni-Dome top lenses with a clear center lens and utilize two liquid injection molded wiper seal dividers for maximum protection against environmental elements. Metal top shields installed on the Uni-Domes and center lens shall provide protection from climatic conditions and provides passive solar radiation to direct heat away from internal components.

The F4N2QLED shall have an electronic LC I/O board. The solid state I/O board shall be microprocessor controlled. The I/O board shall have built-in reverse polarity protection and output-short protection. The I/O board shall have the ability to flash twenty two Super-LED warning lights. There shall be a data bank of 12 Scan-Lock™ flash patterns including steady burn with low power and cruise light functions. The cruise light function shall allow the user the four corner modules as marker courtesy lights. The F4N2QLED will have the capability to install a traffic advisor in the rear of the light bar. The I/O board shall also have outputs to add takedown, alley lights, and auxiliary lights for each set of lights to be controlled in pairs.

All light heads shall be installed in the F4N2QLED with the aid of black polycarbonate snap-in mounting brackets. The solid state light bar shall be vibration resistant. The light bar will contain a 17’ 2/c 8GA unterminated power cable and 17’ 17/c 22GA unterminated control cable. All electronic components are covered by a five year factory warranty. The F4N2QLED shall include a permanent mount kit with hardware.

The light bar shall be controlled in the following manner:

Calling for Right of Way - All Positions
Blocking Right of Way - Clear shall not be Active

The lights shall be activated by a single emergency light switch located on the master light switch panel in the cab.

The light bar shall meet NFPA 1901 edition as configured.

This lightbar shall include the following:
Two (2) red flashing forward facing LED modules.
Two (2) clear flashing forward facing LED modules.
Two (2) red flashing front corner LED modules.
One (1) Blue flashing driver side facing LED module.
One (1) Blue flashing officer side facing LED module.

OPTICOM

There shall be one-(1) GTT Opticom (Model 795H) LED low profile emitter installed in the Lightbar and controlled by a switch in the cab. The unit shall operate in accordance with the current NFPA requirements.

LIGHTS, ZONE B/D UPPER FRONT BODY

Two-(2) Whelen M6 Series Super-LED model M6J shall be installed, one-(1) each side of the upper front corner of the body. The warning light shall incorporate split red/blue Super-LEDs, a clear non-optic hard coated polycarbonate lens, clear optic collimator and utilize a metalized reflector for maximum output. The hard coated lens shall provide extended life/luster protection against UV and chemical stresses. The encapsulated lens/reflector assembly and conformal coated PC board shall provide additional protection against environmental elements. The solid state warning lights shall be vibration resistant. The self-contained flashing light shall have 164 Scan-Lock flash patterns including synchronize feature and steady burn. The warning light is covered by a five year factory warranty. The surface mount module includes a M6FC chrome flange and hardware for horizontal mounting.

LIGHTS, ZONE B/D UPPER REAR BODY

Two-(2) Whelen M6 Series Super-LED model M6J shall be installed, one-(1) each side of the upper rear corner of the body. The warning light shall incorporate split red/blue Super-LEDs, a clear non-optic hard coated polycarbonate lens, clear optic collimator and utilize a metalized reflector for maximum output. The hard coated lens shall provide extended life/luster protection against UV and chemical stresses. The encapsulated lens/reflector assembly and conformal coated PC board shall provide additional protection against environmental elements. The solid state warning lights shall be vibration resistant. The self-contained flashing light shall have 164 Scan-Lock flash patterns including synchronize feature and steady burn. The warning light is covered by a five year factory warranty. The surface mount module includes a M6FC chrome flange and hardware for horizontal mounting.

LIGHTS, ZONE C UPPER OUTBOARD

Two-(2) Whelen M9 Series Super-LED model M9J shall be installed, one-(1) each side on the upper rear of the apparatus in the outboard position. The warning light shall incorporate split red/blue Super-LEDs, a clear non-optic hard coated polycarbonate lens, clear optic collimator and utilize a metalized reflector for maximum output. The hard coated lens shall provide extended life/luster protection against UV and chemical stresses. The encapsulated lens/reflector assembly and conformal coated PC board shall provide additional protection against environmental elements. The solid state

warning lights shall be vibration resistant. The self-contained flashing light shall have 164 Scan-Lock flash patterns including synchronize feature and steady burn. The warning light is covered by a five year factory warranty. The surface mount module includes a M9FC chrome flange and hardware for horizontal mounting.

LIGHTS, ZONE A LOWER

Two-(2) Whelen M6 Series Super-LED model M6J lights shall be installed, one-(1) each side front of the apparatus. The warning light shall incorporate split red/blue Super-LEDs, a clear non-optic hard coated polycarbonate lens, clear optic collimator and utilize a metalized reflector for maximum output. The hard coated lens shall provide extended life/luster protection against UV and chemical stresses. The encapsulated lens/reflector assembly and conformal coated PC board shall provide additional protection against environmental elements. The solid state warning lights shall be vibration resistant. The self-contained flashing light shall have 164 Scan-Lock flash patterns including synchronize feature and steady burn. The warning light is covered by a five year factory warranty. The surface mount module includes a M6FC chrome flange and hardware for horizontal mounting.

LIGHTS, ZONE B/D FRONT LOWER

Two-(2) Whelen M6 Series Super-LED model M6J lights shall be installed, one-(1) each side forward portion of the apparatus. The warning light shall incorporate split red/blue Super-LEDs, a clear non-optic hard coated polycarbonate lens, clear optic collimator and utilize a metalized reflector for maximum output. The hard coated lens shall provide extended life/luster protection against UV and chemical stresses. The encapsulated lens/reflector assembly and conformal coated PC board shall provide additional protection against environmental elements. The solid state warning lights shall be vibration resistant. The self-contained flashing light shall have 164 Scan-Lock flash patterns including synchronize feature and steady burn. The warning light is covered by a five year factory warranty. The surface mount module includes a M6FC chrome flange and hardware for horizontal mounting.

LIGHTS, ZONE B/D MIDSHIP LOWER

Two-(2) Whelen M6 Series Super-LED model M6J lights shall be installed, one-(1) each side midship of the apparatus. The warning light shall incorporate split red/blue Super-LEDs, a clear non-optic hard coated polycarbonate lens, clear optic collimator and utilize a metalized reflector for maximum output. The hard coated lens shall provide extended life/luster protection against UV and chemical stresses. The encapsulated lens/reflector assembly and conformal coated PC board shall provide additional protection against environmental elements. The solid state warning lights shall be vibration resistant. The self-contained flashing light shall have 164 Scan-Lock flash patterns including synchronize feature and steady burn. The warning light is covered by a five year factory warranty. The surface mount module includes a M6FC chrome flange and hardware for horizontal mounting.

LIGHTS, ZONE B/D REAR LOWER

Two-(2) Whelen LINZ6 Series Super-LED model LINZ6J lights shall be installed, one-(1) each side rearward portion of the apparatus. The warning light shall incorporate three red and three blue Super-LEDs, a clear non-optic hard coated polycarbonate lens, clear optic collimator and utilize a metalized reflector for maximum output. The hard coated lens shall provide extended life/luster protection against UV and chemical stresses. The encapsulated lens/reflector assembly and conformal coated PC board shall provide additional protection against environmental elements. The solid state warning lights shall be vibration resistant. The self-contained flashing light shall have 69 Scan-Lock flash patterns including synchronize feature and steady burn. The warning light is covered by a five year factory warranty. The surface mount module includes a black flange and hardware for horizontal mounting.

LIGHTS, ZONE C LOWER

Two-(2) Whelen M6 Series Super-LED model M6J shall be installed, one-(1) each side on the lower rear of the apparatus. The warning light shall incorporate split red/blue Super-LEDs, a clear non-optic hard coated polycarbonate lens, clear optic collimator and utilize a metalized reflector for maximum output. The hard coated lens shall provide extended life/luster protection against UV and chemical stresses. The encapsulated lens/reflector assembly and conformal coated PC board shall provide additional protection against environmental elements. The solid state warning lights shall be vibration resistant. The self-contained flashing light shall have 164 Scan-Lock flash patterns including synchronize feature and steady burn. The warning light is covered by a five year factory warranty. The surface mount module includes a M6FC chrome flange and hardware for horizontal mounting.

STOP, TURN AND BACK-UP LIGHTS

Stop, turn and backup lights shall be Whelen M6 Series, individual fixtures. The red stop (LED) light shall be model M6BTT, the turn light shall be a model M6T amber (LED) type with directional arrow, and the backup light shall be a white (LED) model M6BUW.

HOUSING, REAR TAIL LIGHT ASSEMBLY

The fixtures shall be mounted on each rear face of the body in a model M6FCV4, four-(4) light head chrome housing.

LIGHT, REAR DIRECTIONAL

A Whelen Traffic Advisor™ model TAL85 shall be provided. The traffic advisor shall incorporate a rectangular extruded black powder coated aluminum chassis with eight amber 5mm series LED lights with waterproof connectors. The 5mm series lights shall be installed with an amber non-optic hard coated polycarbonate lens. The 5mm series lights shall incorporate 40 amber 5mm LEDs. The hard coated lens shall provide extended life/luster protection against UV and chemical stresses. The encapsulated coated PC board and foam in place gasket shall provide additional protection against environmental elements. The 5mm lights are installed with waterproof connectors.

The solid state traffic advisor shall be vibration resistant. The TAL85 shall include model TACTL5 control head that includes remote flash control. The TACTL5 shall have four programmable directional sequence flash patterns of left, right, split, and flash. The LED display on the control head shall replicate the TAL85 directional sequence. The traffic advisor control head shall have a rear panel dip switch for the ability to set eight additional Scan-Lock™ flash patterns. The TACTL5 shall contain a 10 amp external fuse for reverse polarity protection. The TACTL5 shall include a bail strap mounting kit. The TAL85 will contain a 15’ 9/C 14/18 AWG interconnecting cable with quick disconnect feature.
The rear directional light shall be surface mounted to the body.
The control head for the rear directional light shall be located centered on top of the cab dash.

CLEARANCE LIGHTS AND REFLECTORS

Clearance lights and reflectors shall be LED lights, which include two-(2) red marker lights, four-(4) red rectangular reflectors, two-(2) amber rectangular reflectors and one-(1) red three light cluster recessed in the rear step.

LIGHTS, UNDERBODY

Four (4) Whelen LED underbody "Ground Effect" light(s) shall be installed at a location to be determined by the Fire Department. The underbody light(s) shall illuminate the ground beneath the apparatus.

The 12v steady burn light(s) shall incorporate 12 clear LED and a clear optic hard coated polycarbonate lens. The hard coated lens shall provide extended life/luster protection against UV and chemical stresses. The encapsulated coated PC

board and lens fitted with foam in place gasket assembly shall provide additional protection against environmental elements. The solid state light shall be vibration resistant. The 20C0CDCD will contain 350 usable lumens. An installation kit including mounting hardware and rubber gasket shall be provided. The 20C0CDCD will contain a 12" terminated pigtail with a waterproof Deutsch® connector. The light is covered by a five year factory warranty.

The lights shall be controlled by a switch in the cab.

LIGHT, LICENSE PLATE

A Whelen OS Series LED model 0SC0EDCR shall be provided at the rear of the apparatus to illuminate the license plate. The steady burn illumination light shall incorporate three clear LED and a clear non-optic hard coated polycarbonate lens. The hard coated lens shall provide extended life/luster protection against UV and chemical stresses. The encapsulated assembly shall provide protection against environmental elements. The solid state illumination light shall be vibration resistant. An installation kit including mounting hardware, neoprene gasket and 45 degree angle chrome housing shall be provided for surface mounting. The 0AC0EDCR will contain a 12” non-terminated pigtail. The illumination light meets SAE J592 requirements and is covered by a five year factory warranty.

LIGHT(S), LED PERIMETER ILLUMINATION

Two (2) Whelen LED model PELCC perimeter illumination light(s) shall be provided as specified. The steady burn illumination light shall incorporate six clear LED and a clear optic hard coated polycarbonate lens for maximum outlet. The PELCC shall have a 40-degree downward projection in a solid polycarbonate chrome plated housing. The hard coated sealed lens shall provide extended life/luster protection against UV and chemical stresses. The conformal coated PC board shall provide additional protection against environmental elements. The solid state illumination light shall be vibration resistant.

The lights shall be located on the rear of the apparatus to illuminate the tail board. The lights shall be activate by the work light switch.

LIGHTS, 12-VOLT SURFACE MOUNT SCENE

Three (3) pair of Whelen M6 Series Model M6ZC scene lights shall be provided and installed on the apparatus. The steady burn scene light shall incorporate Linear Super-LED® and Smart LED® technology. The M6ZC configuration shall consist of 12 clear gradient Super-LED’s and a clear optic polycarbonate lens. The scene light, with the aid of two screws, shall have the ability to be installed as a surface mount scene light. The M6ZC shall meet KKK 1822F and AMD024 specifications.

The lens/reflector assembly shall be sealed and resistant to water, moisture, dust, and other environmental conditions. The hard coated lens shall provide extended life/luster protection against UV and chemical stresses. The light engine shall be installed at the rear of the unit and be vacuum tested to ensure proper sealing. The PC board shall be conformal coated for additional protection.
The scene lights shall be installed, one-(1) each side of the body in the upper front corners.
The front side body mounted scene lights shall be controlled by individual scene light switches located in the cab labeled LEFT SCENE and RIGHT SCENE.
The scene lights shall be installed, one-(1) each side of the body in the upper rear corners.
The rear body side mounted scene lights shall be controlled by individual scene light switches located in the cab labeled LEFT SCENE and RIGHT SCENE.

The scene lights shall be installed, one-(1) each side on the upper rear outboard corners of the body.
The upper rear body mounted scene lights shall be controlled by a scene light switch located in the cab labeled REAR SCENE.

GENERATOR, BELOW APPARATUS

The generator shall be installed below the apparatus.

PTO GENERATOR

An Onan Proetc YD25, 25kW PTO driven generator system shall be supplied and installed. The genset system shall be capable of producing the nominal output power of 25kW, 120V / 240V, 60 Hz. The genset shall be installed per the manufacturer recommendations.

A transmission PTO adapter must be used. The gear ratio of the PTO shall be selected to provide required genset speeds with respect to engine speeds.

A display meter consisting of 4 numeric LED displays shall be used. The meter shall simultaneously display system voltage, frequency, and amperage in each of the two 120V legs. The meter shall also have provisions for toggling to total hours run and oil temp via a mode switch. The display shall be mounted in an area clear for operator observation and near the on/off switch.

FEATURES INCLUDE

- Heavy-duty, field-proven design for long life
- Capped voltage regulator
- Environmental protection for adverse conditions
- Low harmonic distortion
- Dual mounting configurations
- Remote mountable solid state electronic voltage regulator
- 50/60 Hz switchable
- Precision balances rotating field generator
- Epoxy impregnated windings with overcoat
- Brush less exciter
- Double- sealed, pre lubricated bearings
- Air cooled with shaft mounted centrifugal fan
- Bidirectional rotation
- Skewed stator for low harmonic distortion
- Class H insulation, 180 degree C temperature rating
- Re-connectable three phase and single phase

SPECIFICATIONS

- Length- 28.37"
- Height - 14"
- Width - 15"
- Weight - 393 lbs

PTO, GENERATOR

A clutch driven 10-bolt heavy-duty engine driven PTO (Power Take off Unit) installed on the EVS transmission to run the generator. The output side of the PTO shall have a SAE "B" pad or a keyed 1.25" shaft. A switch located in the cab shall be furnished to activate the PTO. A neutral switch interlock shall be provided preventing accidental engagement of the PTO unless the transmission is in the neutral position.

LIGHT, GENERATOR PTO INDICATOR

A green light to indicate that the PTO is in gear shall be mounted in the cab and on the pump panel.

GENERATOR SPLASH GUARD

A powder coat painted splash cover shall be installed to reduce the amount of road spray on the frame mounted PTO generator. A V-ring seal shall also be installed in the cover to provide additional protection against contaminates reaching the generator front seals.

POWER SOURCE SPECIFICATION PLATE

A permanently affixed plate shall be installed near operator's position. The plate shall provide the operator with the following information:

- Rated voltage(s) and type (AC or DC)
- Phase
- Rated frequency (at rated voltage(s))
- Rated Amperage
- Continuous rated watts
- Power source engine speed

BREAKER PANEL

A General Electric breaker box with 240 main breaker and ten (10) 120 volt circuit breakers shall be installed. The breaker box shall include a master breaker sized according to the generator output. The breaker box shall be located in a compartment as specified by the engineering department to meet the current NFPA specifications.

WIRING PROTECTION

All 120-volt wiring shall be run in high temperature, rated at a minimum of 275º F, split loom for easy access to wires when trouble shooting.

120-VOLT ELECTRICAL SYSTEM REQUIREMENTS/TESTING

The following guidelines shall apply to the 120/240 VAC system installation:

General-
Any fixed line voltage power source producing alternating current (ac) line voltage shall produce electric power at 60 cycles plus or minus 5 cycles.

Except where superseded by the requirements of NFPA 1901, all components, equipment and installation procedures shall conform to NFPA 70, National Electrical Code (herein referred to as the NEC).

Line voltage electrical system equipment and materials included on the apparatus shall be listed and installed in accordance with the manufacturer's instructions. All products shall be used only in the manner for which they have been listed.

Grounding-
Grounding shall be in accordance with Section 250-6 "Portable and Vehicle Mounted Generators" of the NEC. Ungrounded systems shall not be used. Only stranded or braided copper conductors shall be used for grounding and bonding.

An equipment grounding means shall be provided in accordance with Section 250-91 (Grounding Conductor Material) of the NEC.

The grounded current carrying conductor (neutral) shall be insulated from the equipment grounding conductors and from the equipment enclosures and other grounded parts. The neutral conductor shall be colored white or gray in accordance with Section 200-6 (Means of Identifying Grounding Conductors) of the NEC.

In addition to the bonding required for the low voltage return current, each body and driving or crew compartment enclosure shall be bonded to the vehicle frame by a copper conductor. This conductor shall have a minimum amperage rating of 115 percent of the nameplate current rating of the power source specification label as defined in Section 310-15 (amp capacities) of the NEC. A single conductor properly sized to meet the low voltage and line voltage requirements shall be permitted to be used.

All power source system mechanical and electrical components shall be sized to support the continuous duty nameplate rating of the power source.

Operation-
Instructions that provide the operator with the essential power source operating instructions, including the power-up and power-down sequence, shall be permanently attached to the apparatus at any point where such operations can take place.

Provisions shall be made for quickly and easily placing the power source into operation. The control shall be marked to indicate when it is correctly positioned for power source operation. Any control device used in the drive train shall be equipped with a means to prevent the unintentional movement of the control device from its set position.

A power source specification label shall be permanently attached to the apparatus near the operator's control station. The label shall provide the operator with the information detailed in Figure 19-4.10. NEC.

Direct drive (PTO) and portable generator installations shall comply with Article 445 (Generators) of the NEC.

Overcurrent protection-
The conductors used in the power supply assembly between the output terminals of the power source and the main over current protection device shall not exceed 144 inches (3658 mm) in length.

For fixed power supplies, all conductors in the power supply assembly shall be type THHW, THW, or use stranded conductors enclosed in nonmetallic liquid tight flexible conduit rated for a minimum of 194 degree Fahrenheit (90 degrees Celsius).

For portable power supplies, conductors located between the power source and the line side of the main over current protection device shall be type SO or type SEO with suffix WA flexible cord rated for 600-volts at 194 degrees Fahrenheit (90 degrees Celsius).

Wiring Methods-
Fixed wiring systems shall be limited to the following:
Metallic or nonmetallic liquid tight flexible conduit rated at not less than 194 degrees Fahrenheit (90 degrees Celsius)
or
Type SO or Type SEO cord with a WA suffix, rated at 600 volts at not less than 194 degrees Fahrenheit (90 degrees Celsius)

Electrical cord or conduit shall not be attached to chassis suspension components, water or fuel lines, air or air brake lines, fire pump piping, hydraulic lines, exhaust system components, or low voltage wiring. In addition the wiring shall be run as follows.

-Separated by a minimum of 12 inches (305 mm), or properly shielded, from exhaust piping
-Separated from fuel lines by a minimum of six (6) inches (152 mm) distance.

Electrical cord or conduit shall be supported within six (6) inches (152 mm) of any junction box and at a minimum of every 24 inches (610 mm) of continuous run. Supports shall be made of nonmetallic materials or corrosion protected metal. All supports shall be of a design that does not cut or abrade the conduit or cable and shall be mechanically fastened to the vehicle.

Wiring Identification-
All line voltage conductors located in the main panel board shall be individually and permanently identified. The identification shall reference the wiring schematic or indicate the final termination point. When pre wiring for future power sources or devices, the unterminated ends shall be labeled showing function and wire size.

Wet Locations-
All wet location receptacle outlets and inlet devices, including those on hardwired remote power distribution boxes, shall be of the grounding type provided with a wet location cover and installed in accordance with Section 210-7 "Receptacles and Cord Connections" of the NEC.

All receptacles located in a wet location shall be not less than 24 inches (610 mm) from the ground. Receptacles on off-road vehicles shall be a minimum of 30 inches (762 mm) from the ground.

The face of any wet location receptacle shall be installed in a plane from vertical to not more than 45 degrees off vertical. No receptacle shall be installed in a face up position.

Dry Locations-

All receptacles located in a dry location shall be of the grounding type. Receptacles shall be not less than 30 inches (762 mm) above the interior floor height.

All receptacles shall be marked with the type of line voltage (120-volts or 240-volts) and the current rating in amps. If the receptacles are direct current, or other than single phase, they shall be so marked.

Listing-
All receptacles and electrical inlet devices shall be listed to UL 498, Standard for Safety Attachment Plugs and Receptacles, or other appropriate performance standards. Receptacles used for direct current voltages shall be rated for the appropriate service.

Electrical System Testing-
The wiring and associated equipment shall be tested by the apparatus manufacturer or the installer of the line voltage system.

The wiring and permanently connected devices and equipment shall be subjected to a dielectric voltage withstand test of 900-volts for one-(1) minute. The test shall be conducted between live parts and the neutral conductor, and between live parts and the vehicle frame with any switches in the circuit(s) closed. This test shall be conducted after all body work has been completed.

Electrical polarity verification shall be made of all permanently wired equipment and receptacles to determine that connections have been properly made.

Operational Test per Current NFPA 1901 Standard-\
The apparatus manufacturer shall perform the following operation test and ensure that the power source and any devices that are attached to the line voltage electrical system are properly connected and in working order. The test shall be witnessed and the results certified by Underwriters Laboratories.
The prime mover shall be started from a cold start condition and the line voltage electrical system loaded to 100 percent of the nameplate rating.

The power source shall be operated at 100 percent of its nameplate voltage for a minimum of two-(2) hours unless the system meets category certification as defined in the current NFPA 1901 standard.
Where the line voltage power is derived from the vehicle's low voltage system, the minimum continuous electrical load as defined in the current NFPA 1901 standard shall be applied to the low voltage electrical system during the operational test.

RECEPTACLE(S), 20 AMP/120 VOLT TWIST LOCK

There shall be six (6) NEMA # L5-20, 120 volt 20 amp twist-lock receptacle(s) shall be installed wired to the breaker panel. A weatherproof spring loaded cover shall be installed over the receptacle(s).

Two (2) 120 volt exterior outlets on each side of the front of the body.
- The outlet receptacle(s) shall be 20 amp, twist-lock (NEMA L5-20R)

Two (2) 120 volt exterior outlets, one (1) each side near rear wheel well area.
- The outlet receptacle(s) shall be 20 amp, twist-lock (NEMA L5-20R).

Two (2) 120 volt exterior outlets on each side of the rear of the body.
- The outlet receptacle(s) shall be 20 amp, twist-lock (NEMA L5-20R).

4 WAY JUNCTION BOX(ES)

Two (2) Akron Brass, electrical junction box(es) model EJBX shall be provided. The Electrical Junction Box shall be constructed of heavy-duty, cast aluminum with a quarter of an inch (¼") thick walls and the four corner edges shall be at least one half of a inch (½") thick to withstand the roughest of handling. A carrying handle shall be an integral part of the Junction Box's casting and be large enough to fit a fully gloved hand. The junction box must be internally lite. Each side of the electrical junction box shall be fitted with polypropylene faceplates. The faceplates shall be backlit so that plug orientation to the receptacle is quick and easy to align. Each receptacle shall be equipped with a spring-loaded snap cover and marked in white lettering with that receptacles voltage and ampere rating. All electrical receptacles, plugs and snap type weatherproof covers shall be UL Listed components.

Each electrical junction box shall be equipped with two-(2) L5-20 receptacles and two-(2) 20A straight blade (household) receptacles as specified by the user.

BRACKET(S), JUNCTION BOX

Two (2) junction box mounting bracket(s) shall be installed on the apparatus as directed by the Fire Department. The bracket shall be constructed of diamond plate that is cut, bent, and welded to meet the dimensions of the junction box. The box shall be lined with PVC material to protect the junction box.

A total of two (2) mounting brackets shall be provided and installed inside the front forward left compartments direct beneath each installed cord reel.

Four (4) Nema PF51G-3 2-pole 3-wire single L5-15 twist-lock receptacles shall be provided. Each shall be rated at 15A-120V.

LIGHTS, TRIPOD REAR OF BODY

There shall be a tripod light installed on each side rear of the body.
Two (2) Fire Research Spectra model SPA600-K20 tripod telescopic light(s) shall be provided. The light pole shall be anodized aluminum and have a knurled twist lock mechanism to secure the extension pole in position. The extension pole shall extend 40" and rotate 360 degrees. An internal brake shall slow the extension pole during lowering. The outer pole shall be a grooved aluminum extrusion. The folding legs shall be anodized aluminum tubing with plastic end caps. The fully extended tripod system shall exceed a height of 11'. Wiring shall extend from the pole bottom with a 4' retractile cord.

The lamp head shall have sixty (60) ultra-bright white LEDs, 48 for flood lighting and 12 to provide a spot light beam pattern. It shall operate at 120 volts AC, draw 2 amp, and generate 20,000 lumens of light. The lamp head shall have a unique lens that directs flood lighting onto the work area and focuses the spot light beam into the distance. The lamp head shall be no more than 5 3/8" high by 14" wide by 3 3/4" deep. The lamp head and mounting arm shall be powder coated. The LED scene light shall be for fire service use.

REEL(S), ELECTRIC CORD

There shall be two (2) Hannay Model ECR1618-17-18, electric rewind electric cord reel(s) provided. The cord reel(s) shall have 200' of 10-3 wire cord. The reel shall be mounted as directed and shall be controlled by a 12-volt switch. The cord reel shall be wired to the breaker panel.
The electrical cord provided on the reel(s) shall be yellow in color.

HOSE/CORD ROLLERS

There shall be two (2) 4-way roller assembly(ies) installed to guide the hose/cord on and off the spool to prevent chafing of the apparatus paint.

HOSE/CORD STOP(S)

There shall be two (2) Hannay hose/cord stop(s) model HS-3 attached at the end of each hose/cord.

PLATE, POWER REWIND REEL

A permanently affixed plate shall be installed in a readily visible location adjacent to any permanently connected reel that indicates the following:

- Current Rating
- Current Type
- Phase
- Voltage
- Total Cable Length

PAINT FINISH, CAB/BODY

The apparatus cab/body shall be painted with AkzoNobel Sikkens brand paint. The paint process shall meet or exceed current state regulations concerning paint operations. Pollution control shall include measures to protect the atmosphere, water, and soil. Contractor shall, upon demand, provide evidence that the manufacturing facility is in compliance with State EPA rules and regulations.

The body exterior shall have no mounted components prior to painting to assure full coverage of metal treatments and paint to the exterior surfaces of the body. Any vertically or horizontally hinged smooth-plate compartment doors shall be painted separately to assure proper paint coverage on body, door jambs and door edges.

Paint process shall feature AkzoNobel Sikkens high solid BTLV products and be performed in the following steps: Corrosion Protection - all aluminum surfaces shall be treated with the AkzoNobel Sikkens LV 260 Epoxy coating to provide superior corrosion resistance and excellent adhesion of the base coat.

AkzoNobel Sikkens Sealer/Primer BTLV - acrylic urethane sealer/primer shall be applied to guarantee excellent gloss hold-out, chip resistance and a uniform base color.

AkzoNobel Sikkens High Solid BTLV650 (Base coat) - a lead-free, chromate-free high solid polyurethane base coat shall be applied, providing excellent coverage and durability. A minimum of two-(2) coats shall be applied.

AkzoNobel Sikkens High Solid BTLV650 (Clear coat) - high solid LV clear coat shall be applied as the final step in order to ensure full gloss and color retention and durability. A minimum of two-(2) coats shall be applied.

Any location where aluminum is penetrated after painting, for the purpose of mounting steps, hand rails, doors, lights, or other specified components shall be treated at the point of penetration with a corrosion inhibiting pre-treatment (ECK Corrosion Control). The pre-treatment shall be applied to the aluminum sheet metal or aluminum extrusions in all locations where the aluminum has been penetrated. All hardware used in mounting steps, hand rails, doors, lights, or other specified components shall be individually treated with the corrosion inhibiting pre-treatment.

After the paint process is complete, the gloss rating of the unit shall be tested with a 60 degree gloss meter. Coating thickness shall be measured with a digital MIL gauge and the orange peel with a digital wave scan device.

PAINT COLOR/CODE

The body paint color/code shall be Red, PPG 70853.The color shall be cross-referenced to the Sikkens number. The apparatus chassis shall then be painted as described in the paint section with this color.

PAINT, INTERIOR COMPARTMENT

The interior of the body compartments shall be painted with “F-Shield”.

Color: Dark gray.

PAINT, INTERIOR COMPARTMENT HARDWARE

The interior body compartment shelves, trays, dividers, etc. shall be painted with "F-Shield".

SCOTCHLITE STRIPE

There shall be a 6" wide Scotchlite stripe, with an additional 1" wide stripe located above and below. The stripes shall be located no higher than 60" from the ground installed on the apparatus cab and body. The stripes shall cover a minimum of sixty percent (60%) of each side of the apparatus and forty percent (40%) of the front and rear of the apparatus. The stripe shall be installed to meet the current NFPA requirements.
The striping shall be gold in color.
The pin/secondary stripe shall be black in color.
The reflective stripe shall run straight from the headlights to the rear of the body on each side of the apparatus.

STRIPE, REAR CHEVERON

A minimum of fifty percent of the rear vertical surface of the unit shall be overlaid with a reflective material, installed in an alternating "Chevron" pattern (sloping down and away from the centerline) at a 45-degree angle. Each stripe shall be 6” wide and the colors of stripping shall be in compliance, with the current edition of NFPA 1901.
The Chevron striping shall be 3M red and lime green.

REFLECTIVE MATERIAL, DESIGNATED WALKING SURFACES

1" wide yellow perimeter marking consisting of individual Reflexite diamonds shall be applied to indicate the outside edge of designated standing and walking areas above 48" from the ground in compliance with 2016 NFPA 1901. Steps, ladders and areas with a railing or structure at least 12" high are excluded from this requirement.

LETTERING

There shall be a maximum of sixty-(60) 3" tall Spun Gold letters applied to the apparatus. The lettering shall also have a one color shade applied.

FIRE DEPARTMENT DECALS

There shall be one (1) pair Fire Department decals/Maltese Crosses installed on the apparatus. The decals shall match the Fire Department requirements.

WARRANTY, BODY PARTS & LABOR

There shall be a two-(2) year body mechanical parts and labor warranty provided with the apparatus. The apparatus shall be free of defects in material and workmanship for a warranty period of two-(2) years after the date on which the apparatus is first delivered to the original purchaser.

WARRANTY, CAB/CHASSIS PARTS & LABOR

The manufacturer shall provide a limited parts and labor warranty to the purchaser of the cab and chassis for a period of two-(2) years or 24,000 miles, whichever occurs first. The warranty period shall commence on the date the vehicle is delivered to the end user.

WARRANTY, BODY STRUCTURAL

There shall be a ten-(10) year body warranty on each new fire body/heavy-duty rescue apparatus. The bodies are to be free of structural failures caused by defective design or workmanship for a warranty period of ten-(10) years after the date on which the vehicle is first delivered to the original purchaser or 100,000 miles, whichever occurs first.

WARRANTY, BODY PAINT/PERFORATION

The manufacturer shall warrant each new fire and rescue apparatus body during the warranty period, when used in normal and reasonable manner. All apparatus shall be warranted against peeling, cracking, blistering and corrosion. This warranty shall provide for repair or replacement at the manufacturer's option, any claim in accordance with the following terms and conditions.

WHAT IS COVERED

WARRANTY APPLIES - This warranty is for all new fire and rescue apparatus manufactured by the bidder and is extended only to the original user-purchaser. The warranty registration must be received by the manufacturer within 30 days of the in-service for the warranty to apply.

REPAIRS COVERED - The warranty covers repair or replacement at the manufacturer's option. Repairs shall be made at a factory owned service facility or another approved service facility.

OBTAINING REPAIRS - The original user-purchaser must notify the manufacturer in writing within 30 days after any claimed defect has appeared. Transportation costs to and from the servicing center shall be the responsibility of the user-purchaser.

WARRANTY PERIOD - The warranty period shall begin upon delivery of the apparatus to the original user-purchaser. The warranty period shall be for **TEN YEARS.** Corrosion perforation is defined as **complete penetration** through the exterior metal of the apparatus. The following percentages apply:

Topcoat & Appearance (Gloss, Color Retension and Cracking):
0 to 72 months: 100%
73 to 120 months: 50%

Coating System, Adhesion & Corrosion (Includes Dissimilar Metal Corrosion, FLaking, Blistering and Bubbling)
0 to 36 months: 100%
37 to 84 months: 50%
85 to 120 months: 25%

NOTES:
**Under carriage, cab and body interiors are covered under our standard two-(2) year warranty.*
**Demonstration vehicles sold to an end user will have the full warranty, if sold within two-(2) years of demonstration service, and will be prorated if sold after the second year.*

WHAT IS NOT COVERED
*Any cab not manufactured by the bidder.
*Damage caused by fire, misuse, negligence or accident.
*Damage caused by theft, vandalism, riot or explosion.
*Damage caused by lightning, earthquake, windstorm, hail, flood or use in an acidic environment (such as de-icing compounds, road salts and acid rain).
*Any repairs, modifications, alterations or aftermarket parts added after manufacture without the authorization of the manufacturer.
*Damage from lack of, maintenance and cleaning (proper cleaning and maintenance procedures are detailed in the provided maintenance manual).
*Gold leaf or striping except that which is affected by repair (Gold Leaf or striping must have been installed during manufacturing to be covered under this limited warranty).
*Loss of time, loss of use of the product, inconvenience, lodging, food or other consequential or incidental loss that may result from a failure.

WARRANTY, DIESEL ENGINE

The Cummins engine shall be warranted for a period of five-(5) years or 100,000 miles, whichever occurs first.

WARRANTY, TRANSMISSION

The Allison EVS series transmission shall be warranted for a period of five-(5) years with unlimited mileage. Parts and labor shall be included in the warranty.

WARRANTY, ANTI LOCK BRAKE SYSTEM

The ABS brake system shall be warranted for a period of three-(3) years/300,000 miles.

MANUALS, APPARATUS BODY

The contractor shall supply, at time of delivery, at two-(2) sets of complete operation and service documentation covering the completed apparatus as delivered and accepted.

The documentation shall address at least the inspection, service, and operations of the fire apparatus and all major components thereof.

SAFETY GUIDE

One-(1) copy of the latest edition of FAMA's Fire Apparatus Safety Guide shall be provided with the completed apparatus.

WIRING DIAGRAMS, CAB/CHASSIS

There will be a complete digital set of electrical schematics provided at the time of delivery. These schematics will have each circuit properly numbered and in color.

The schematic will show each connector in the circuitry and the position in which each circuit enters, exits, or terminates. The schematic will be drawn in such a manner as to allow individual circuitry to be followed throughout the apparatus.

These schematics will not have the circuitry condensed into a single line or sets of lines. Multiple sheets will be acceptable so long as each of the harnesses is properly identified to the connecting sheet and harness. There will be a border around the paper(s), which contain alpha and numeric characters for indexing coordinate reference. There will be an indexing or part reference document for quick location of items shown on the schematics.

WIRING DIAGRAMS, APPARATUS BODY

There will be a complete set of generic electrical schematics provided at the time of delivery. These schematics will have each circuit properly numbered and in color.

The schematic will show each connector in the circuitry and the position in which each circuit enters, exits, or terminates. The schematic will be drawn in such a manner as to allow individual circuitry to be followed throughout the apparatus.

These schematics will not have the circuitry condensed into a single line or sets of lines. Multiple sheets will be acceptable so long as each of the harnesses is properly identified to the connecting sheet and harness. There will be a border around the paper(s), which contain alpha and numeric characters for indexing coordinate reference. There will be an indexing or part reference document for quick location of items shown on the schematics.

This document will refer the user to the appropriate drawing and page number and to sections of the drawing(s) by the means of letter and number coordinates. The schematic will show all harnesses used in the apparatus cab, chassis and body that is supplied by the chassis and body manufacturer.

Modifications to the manufactured standard harnesses are to be documented and properly indexed for quick identification.

A complete wire number, color, and function listing will accompany the schematics.

NFPA REQUIRED EQUIPMENT, FD SUPPLIED

The loose equipment as outlined in NFPA 1901, 2016 edition, section 10.9 thru 10.9.3 shall be provided by the fire department unless it is listed in this proposal. All loose equipment shall be installed on the apparatus before placed in emergency service, unless the Fire Department authorized agent signs the State of Exception as listed in the NFPA 1901 Standard for Automotive Fire Apparatus sections 4.21 thru 4.21.2.

HANDLIGHT(S), STREAMLIGHT FIRE VULCAN

Two (2) waterproof Streamlight Fire Vulcan series light(s), part number 44451, shall be provided. The light(s) shall have a orange high-impact ABS thermoplastic housing, rubberized impact bumper, lens ring, shoulder strap and cushioned-grip

handle. The light(s) shall contain C4 LED technology and taillight LEDs that operate in blinking and steady modes. The LED bulb shall be provide up to 80,000 peak beam candlepower rated at 145 lumens. Ultra bright blue tail light LED's are provided to make certain you can be seen even in thick smoke.

The Lithium-Ion rechargeable cells recharge in 5 hours and provides run times up to 3 hrs. with steady High LED & taillights in operation.

The vehicle-mounted direct-wire charging rack(s) shall be wired direct to the batteries of the 12-volt DC system on the apparatus.

One shall be mounted on the front wall of the front compartment of each side of the apparatus. Exact locations determined during the pre-construction conference

WHEEL CHOCKS WITH BRACKETS

There shall be two (2) pair of Ziamatic model SAC-44 folding wheel chocks with SQCH-44-H horizontal chock holder(s) mounted on the apparatus body as directed by the fire department.

The brackets shall be mounted on each side of the apparatus just in front of the rear axle.

MISCELLANEOUS HARDWARE

One (1) bag of stainless steel screws, nuts, bolts and washers as used in the construction of the unit shall be provided with the vehicle.

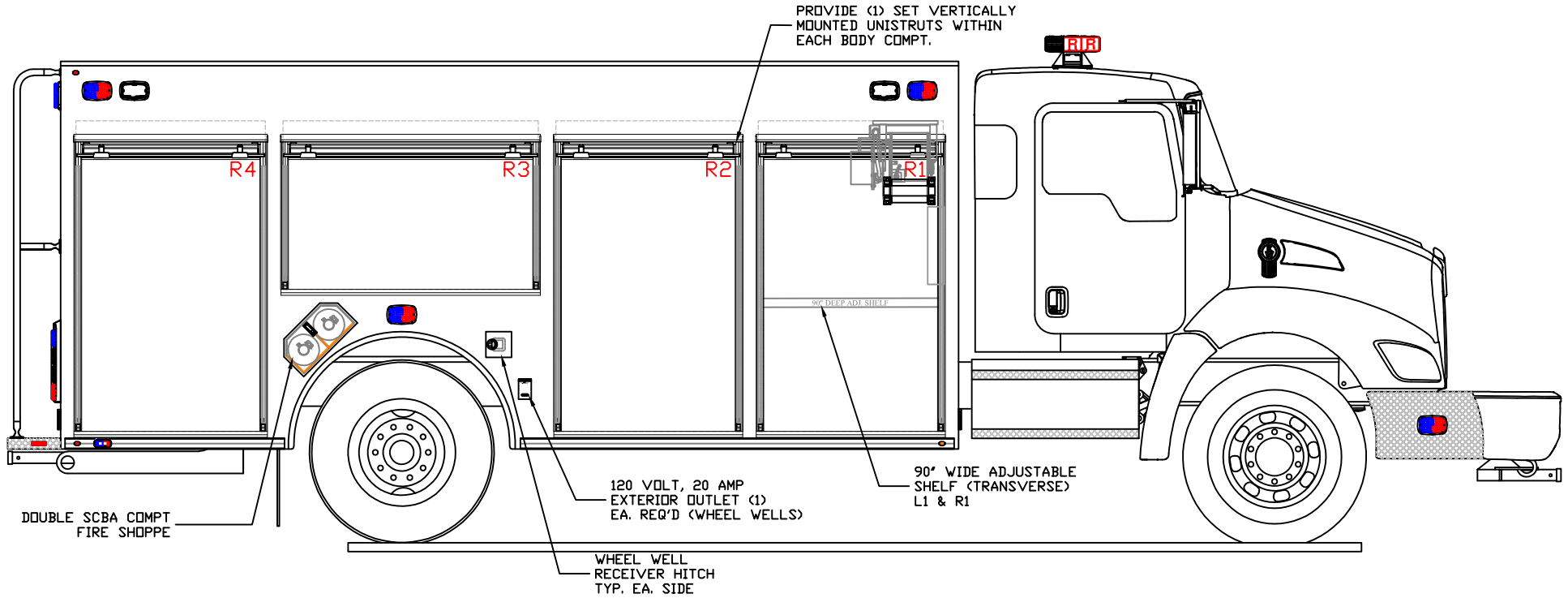

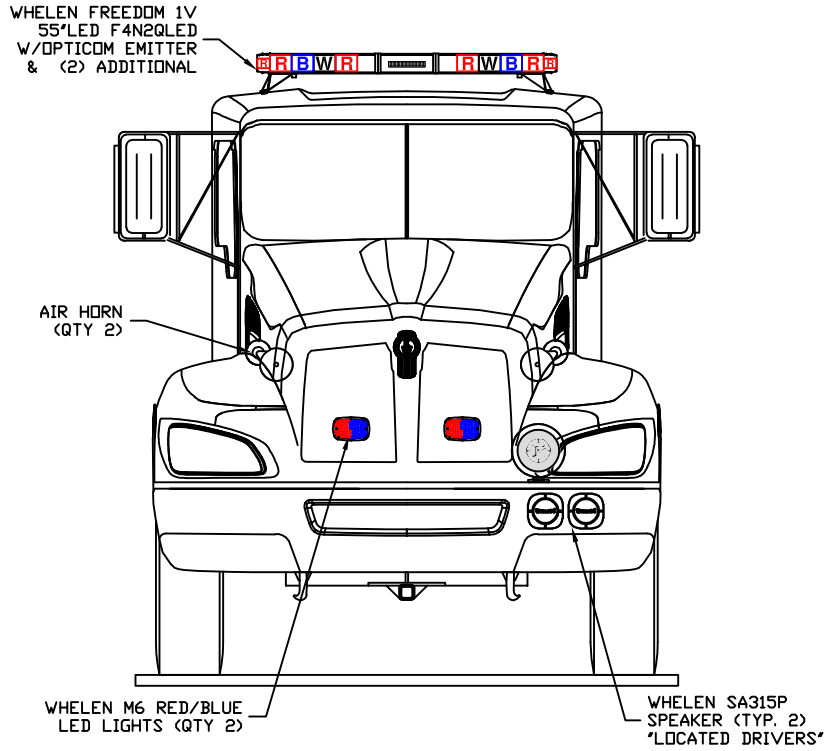

COMPARTMENT DIMENSIONS		
COMPT.	OPENING	INTERIOR
L1	39.5W X 61.25H	42W X 70H X 29D/TRANS.
L2	39.5W X 61.25H	42W X 70H X 29D/TRANS.
L3	55.5W X 29.25H	58W X 38H X TRANSVERSE
L4	40.5W X 61.25H	43W X 70H X 29D
R1	39.5W X 61.25H	42W X 70H X 29D/TRANS.
R2	39.5W X 61.25H	42W X 70H X 29D/TRANS.
R3	55.5W X 29.25H	58W X 38H X TRANSVERSE
R4	40.5W X 61.25H	43W X 70H X 29D
B1	35.5W X 61.25H	38W X 70H X 46D

FERRARA
REV GROUP

JOPLIN FIRE DEPT.
HEAVY RESCUE
KENWORTH T370 (2) DOOR

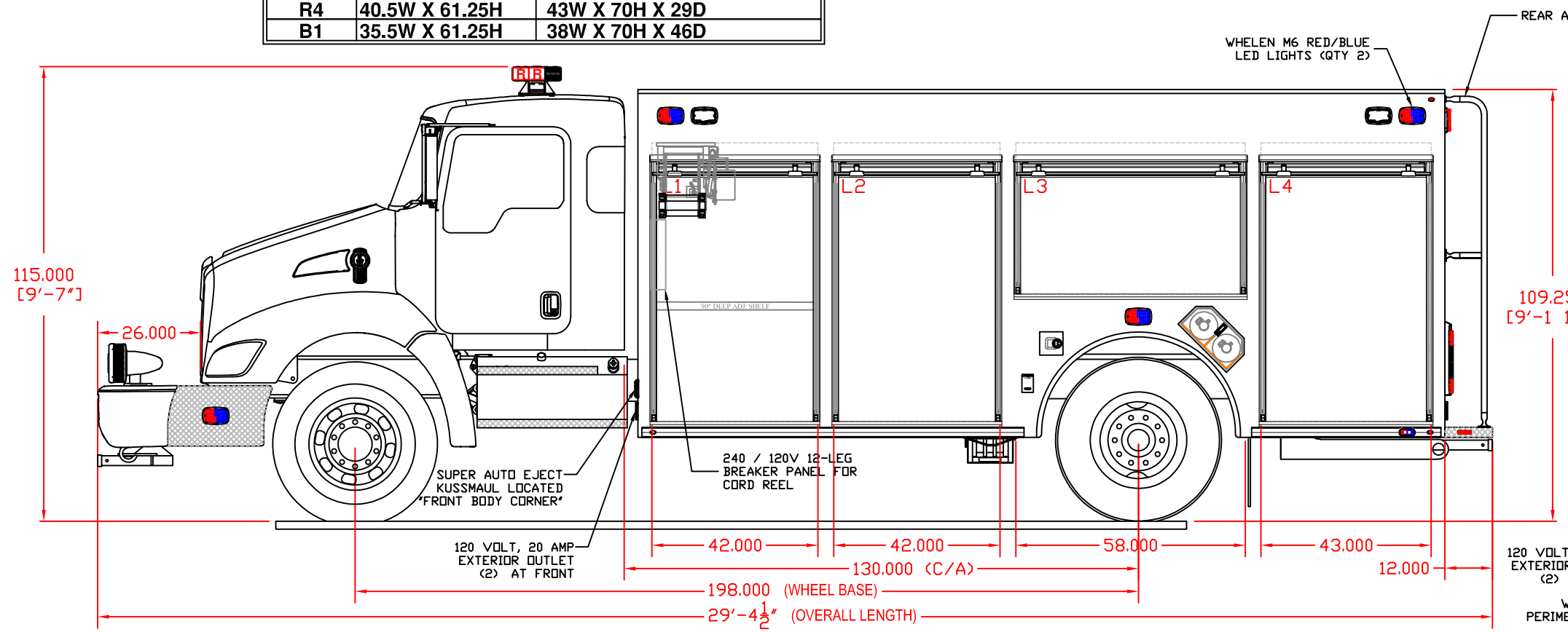

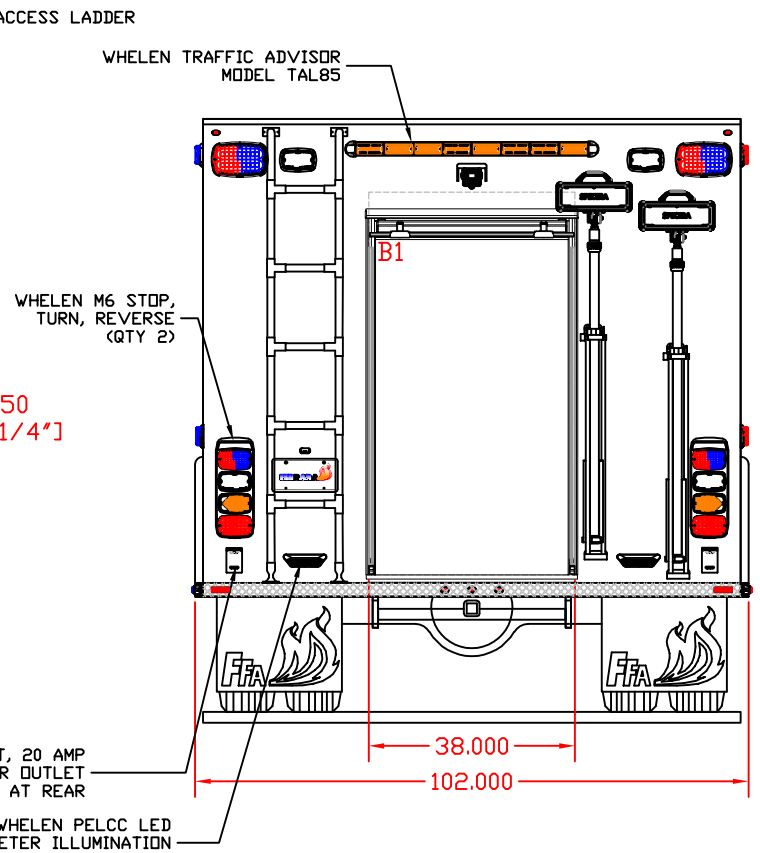

04-30-19 (REG)