Z&P Meeting: August 8, 2016
City Council Meeting: September 6, 2016

# STAFF PLANNING REPORT
## Land Detachment Request

**CASE 029-16** A request to detach land located within the municipal corporate city limits of the City of Joplin and transfer to the City of Webb City for annexation property

**LOCATION** 3210 North Progress Avenue

**APPLICANT** Bemis Packaging

---

### EXISTING CONDITIONS

| Zoning | Land Use | Property Size |
|---|---|---|
| M-2-PD | Undeveloped | 5.5 acres |

### DISCUSSION

This is a request by Bemis Packaging to detach a parcel directly west of their facility and transfer that land into the City of Webb City. Their business is located in the Joplin-Webb City Industrial Park. The part of the park located in Joplin is zoned M-2-PD (Planned Heavy Industrial) and contains industrial uses. Bemis Packaging sits on a tract that contains approximately 31 acres, approximately 25.5 of which are already located in the City of Webb City.

The City of Joplin is releasing the portion that Bemis Packaging is requesting to be annexed by the City of Webb City. Bemis Packaging initiated this request because their existing facility is already located in Webb City.

*Staff recommends approval of Case 029-16.*

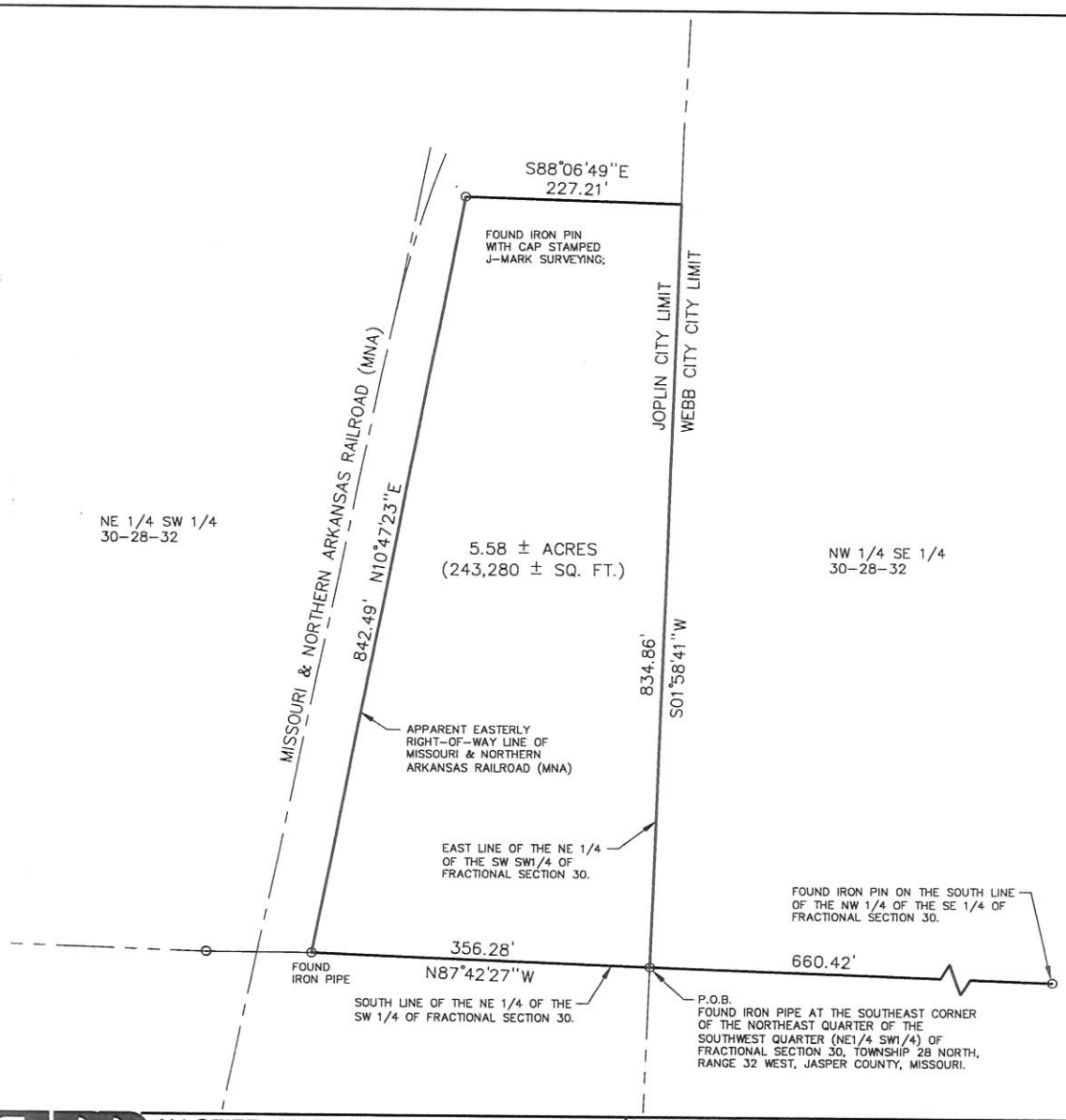


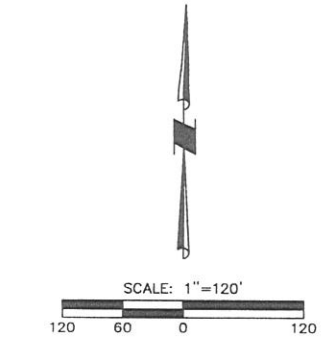


BASIS OF BEARINGS: MISSOURI STATE PLANE COORDINATE SYSTEM, WEST ZONE.

JOPLIN TO WEBB CITY ANNEXATION TRACT:

A TRACT OF LAND BEING PART OF THE NORTHEAST QUARTER OF THE SOUTHWEST QUARTER (NE1/4 SW1/4) OF FRACTIONAL SECTION 30 TOWNSHIP 28 NORTH RANGE 32 WEST ALL IN THE CITY OF JOPLIN, JASPER COUNTY, MISSOURI. BEING DESCRIBED MORE FULLY AS FOLLOWS:

BEGINNING AT THE SOUTHEAST CORNER OF THE NORTHEAST QUARTER OF THE SOUTHWEST QUARTER (NE1/4 SW1/4) OF FRACTIONAL SECTION 30, TOWNSHIP 28 NORTH, RANGE 32 WEST, A FOUND IRON PIPE;
THENCE N87°42'27"W A DISTANCE OF 356.28 FEET ALONG THE SOUTH LINE OF SAID QUARTER SECTION TO A FOUND IRON PIPE ON THE APPARENT EASTERLY RIGHT-OF-WAY LINE OF MISSOURI & NORTHERN ARKANSAS RAILROAD (MNA);
THENCE N10°47'23"E A DISTANCE OF 842.49 FEET ALONG SAID APPARENT RIGHT-OF-WAY LINE OF SAID RAILROAD TO A FOUND IRON PIN WITH CAP STAMPED J-MARK SURVEYING;
THENCE S88°06'49"E A DISTANCE OF 227.21 FEET TO THE EAST LINE OF SAID THE NORTHEAST QUARTER OF THE SOUTHWEST QUARTER (NE1/4 SW1/4) OF FRACTIONAL SECTION 30;
THENCE S01°58'41"W A DISTANCE OF 834.86 FEET ALONG SAID EAST LINE TO THE POINT OF BEGINNING.

CONTAINING 5.58 ACRES (243,280.09 SQUARE FEET) MORE OR LESS.

PARENT TRACT – BK. 2160 PG. 0074 AS RECORDED IN JASPER COUNTY RECORDER'S OFFICE IN CARTHAGE MISSOURI.

ALLGEIER, MARTIN and ASSOCIATES, INC.
CONSULTING ENGINEERS and SURVEYORS
7231 EAST 24th STREET JOPLIN, MISSOURI 64804 (417) 680 - 7200

THIS DRAWING IS A DOCUMENT OF SERVICE AND IS THE PROPERTY OF ALLGEIER, MARTIN AND ASSOCIATES, INC. THIS DOCUMENT SHALL NOT BE USED ON THIS OR OTHER PROJECTS WITHOUT THE EXPRESS WRITTEN CONSENT OF ALLGEIER, MARTIN AND ASSOCIATES, INC.

CERTIFICATE OF AUTHORITY MISSOURI NO. 000427

| DATE | REVISION |
|---|---|
| | |

| | |
|---|---|
| DWN. BY: | BF |
| CKD. BY: | DDC |
| APPD. BY: | DDC |
| DATE: | 7-15-2016 |

# BEMIS FLEXIBLE PACKAGING - ANNEXATION EXHIBIT

SECTION 30, T28N, R32W — JASPER COUNTY, MO

DWG. NO.

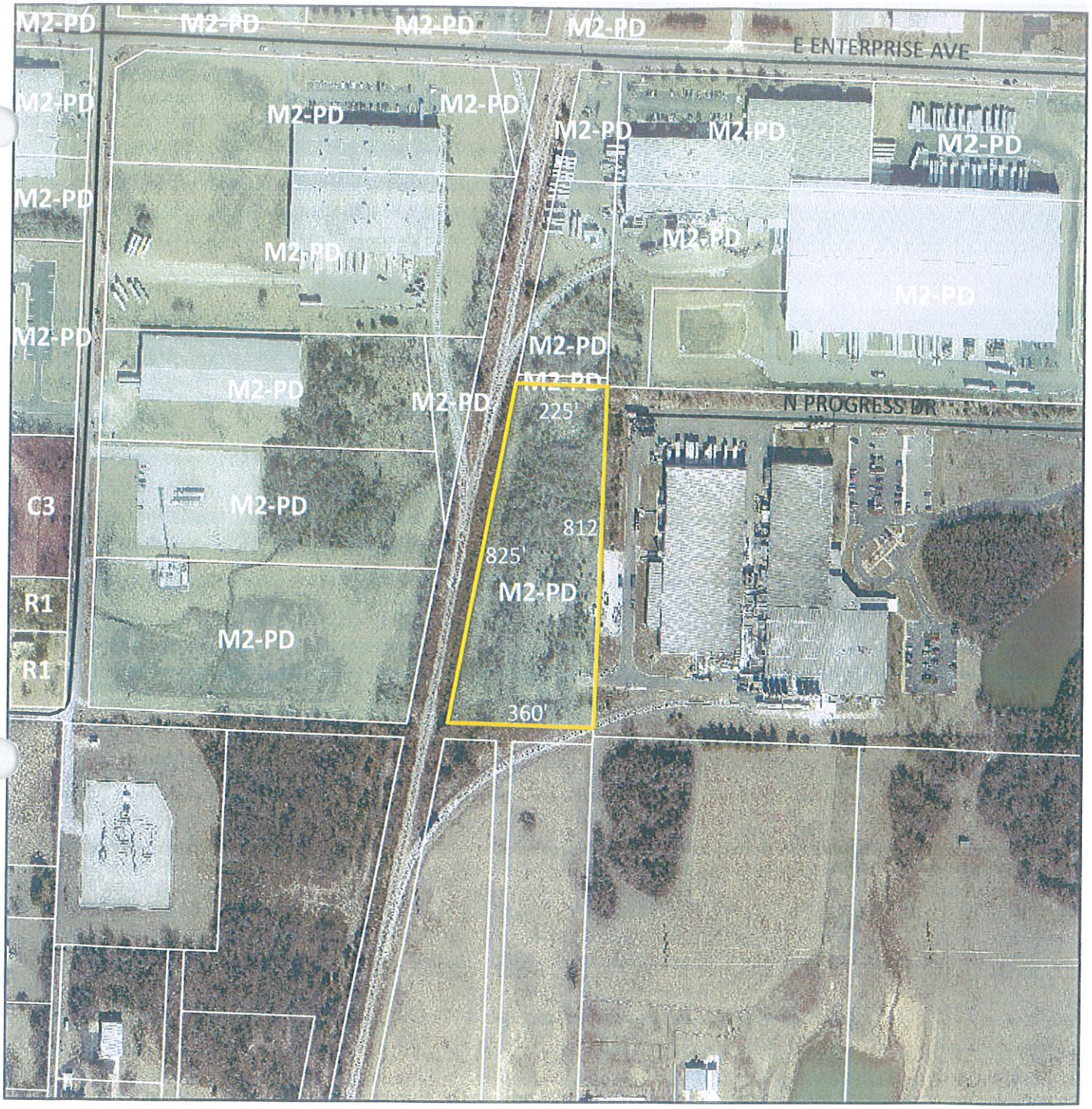


Case 029-16: 3210 North Progress Avenue – A request to detach land located within the municipal corporate city limits of the City of Joplin and transfer to the City of Webb City for annexation property – Bemis Packaging.

N

Case 029-16: 3210 North Progress Avenue – A request to detach land located within the municipal corporate city limits of the City of Joplin and transfer to the City of Webb City for annexation property – Bemis Packaging.

Mr. Smith opened the public hearing for Case 029-16.

Mr. Troy Bolander, 602 South Main Street, Joplin, stated this property is located in the Joplin/Webb City Industrial Park. Several properties are in Webb City, with other properties being in the city of Joplin. Bemis Packaging owns property in both Webb City and Joplin. Their facility is located in Webb City, and they own an adjacent tract to the west that lies in Joplin. They are requesting the release of the property from Joplin, with Webb City annexing the property, so Bemis Packaging can aggregate all their property into Webb City. This is strictly a matter of cleaning up city boundaries. Staff recommends approval of this request.

Mr. Ramsour asked how this affects the tax base. Mr. Bolander replied the taxes are low since the property is undeveloped, but it will now go into Webb City.

Mr. Ramsour expressed concern that Joplin is giving up tax revenues if Bemis Packaging constructs a building on the property. Mr. Bolander replied the building is in Webb City. It is difficult to own a building or develop the property with having part of the development in Joplin and part of it in Webb City. Joplin has received some property in the past from Webb City in the same situation.

Ms. Cunningham stated the large building to the east of the property in this request is Bemis Packaging's current facility.

Mr. Smith asked for comments from the commissioners and the audience, and none were received. He closed the public hearing for Case 029-16.

**MR. CORTEZ MOVED, SECONDED BY MR. RAMSOUR, THAT CASE 029-16 BE FORWARDED TO THE CITY COUNCIL WITH RECOMMENDATION FOR APPROVAL, BASED UPON THE COMMENTS RECEIVED IN THE PLANNING REPORT AND DURING THE PUBLIC HEARING. THE MOTION CARRIED, WITH MR. BROWN, MS. BRUECKNER-SEARS, MR. CORTEZ, MR. DERMOTT, MR. DUNCAN, MR. RAMSOUR, AND MR. SMITH VOTING "AYE" (7 IN FAVOR, 0 ABSENT).**