City of Joplin Mo

3457 West Eddy Lane

Sourcewell Member Number # 032824-MAK.

Attn: C.L Brodie

August 14, 2025

Tri State Truck Center is pleased to submit the following proposal for the purchase of (1) Mack GR64F chassis with mDRIVE transmission. We thank you for your consideration and time with this opportunity.

- Sourcewell member price: $151,958.00 chassis only
  - Sourced Good: PDI $1,441.00

➢ Total price per unit: $153,399.00

Thank you for your consideration,

Jake Simmons | Sales Consultant

Tri-State Truck Center

Accepted by:

_____ Date: 09-05-2025

CUSTOMER PROPOSAL

MACK®



PREPARED FOR

JOPLIN
3457 West Eddy Lane
JOPLIN
MO 648017758

DATE

8/14/2025

PREPARED BY

TRI-STATE TRUCK CENTER, INC
3100 DAVIS BLVD
JOPLIN
MO 64804

QUOTE INFORMATION

TRIST2025000119C483
GRANITE 64FR
Qty: 1

TRI STATE TRUCK CENTER℠



TECHNICAL SPECIFICATION

GRANITE 64FR

MODEL DEFINING			DESCRIPTION	WEIGHT (LB) FRONT	WEIGHT (LB) REAR
S	PB100K	PRICE BOOK LEVEL	2026A Pricebook	0	0
S	LAX05X	VOLTAGE	ELECTRICAL SYSTEM 12 VOLT	0	0

APPLICATION PACKAGES			DESCRIPTION	WEIGHT (LB) FRONT	WEIGHT (LB) REAR
	MPK07K	CHASSIS CONFIGURATION PACKAGE	ONEBOX EATS, LH BATTERY BOX, 6.6 GALLON (25L) SLEEVED DEF, 22" SLEEVED LH FUEL TANK	0	0

CUSTOMER/VEHICLE INFO			DESCRIPTION	WEIGHT (LB) FRONT	WEIGHT (LB) REAR
S	002EF2	CHASSIS (BASE MODEL)	GRANITE 64FR	4,853	1,764
	MP2001	CUSTOMER FLEET SIZE	DEALER FLEET WITH LESS THAN 25 VEHICLES IN OWN FLEET OF ANY VEHICLE BRAND	0	0
S	013001	TYPE OF SERVICE	COMMERCIAL	0	0
S	M98018	WARRANTY REGISTRATION LOCATION	USA - WARRANTY REGISTRATION LOCATION	0	0
	MBT01T	EMISSION WARRANTY CERTIFICATION	EPA (only) for Mack MP7 / MP8 Diesel	0	0
	694DDD	Order Subject to Meeting All Mack Policies, Terms and Conditions,	Including but not Limited to Applicable CARB and/or Section 177 States' Regulation requirements	0	0
	M84025	INTENDED REGISTRATION LOCATION	MISSOURI	0	0
S	5050B5	INITIAL REGISTRATION LOCATION	USA REGISTRATION	0	0
	5FFA1X	BRAND ORNAMENT	BULLDOG, GOLD	0	0
S	534014	LANGUAGE-PUBS/DECAL/SIGNS	ENGLISH	0	0
S	DHX10X	ROAD CONDITION	WELL MAINTAINED SURFACED ROADS >95% DRIVING DISTANCE	0	0
	0051K5	VEHICLE USE & BODY/TRAILER TYPE	VACUUM TRUCK	0	0
	2KEZ1X	TRAILER TYPE	WITHOUT TRAILER TYPE	0	0
S	DKX99X	GROSS COMBINATION WEIGHT (CA in PC29 only)	TRUCK ONLY - NO TRAILER TOWING PROVISIONS PROVIDED	0	0
S	7OBB1X	BRAKE REGULATION	BRAKE REGULATION, STOPPING DISTANCE 94M (310FT)	0	0
	QCXB1X	TOPOGRAPHY	GRADES <6% GREATER THAN 98% OF DRIVING DISTANCE MAX GRADE 16%	0	0
S	E1BD1X	AMBIENT TEMP UPPER LIMIT	AMBIENT TEMPERATURE HOT. WARMER THAN 104 F (40 C) ALLOWED UP TO 25 HOURS PER YEAR	0	0
S	032A89	OPERATING TERRAIN GRADE CONDITIONS	ON-OFF HIGHWAY, STARTING GRADES<18%	0	0
S	033A10	LOADING SURFACE FACTOR	CONCRETE LOADING AND / OR UNLOADING SURFACE	0	0
	0342A2	VEHICLE VOCATION	CONSTRUCTION SERVICE	0	0
	0260H6	SALES PROMOTION	SOURCEWELL SALES PROGRAM	0	0

ENGINE/TRANSMISSIONS			DESCRIPTION	WEIGHT (LB) FRONT	WEIGHT (LB) REAR
	100450	ENGINE / MOTOR	MP8-445C MACK 445HP @ 1400-1700 RPM (PEAK) 2100 RPM (GOV) 1850 LB-FT, US'21	2,108	530
S	3GCB1X	GHG APPLICATION, VEHICLE	GREEN HOUSE GAS VOCATIONAL APPLICATION	0	0
	1360Z6	TRANSMISSION	MACK TMD12AFO-HD mDRIVE HD 12 SP-(OVERDRIVE)	503	168
S	V4EZ9X	GEARBOX 12TH GEAR LOCK-OUT	WITHOUT 12TH GEARBOX GEAR LOCK-OUT	0	0

TECHNICAL SPECIFICATION *(cont.)*

		EXHAUST/EMISSIONS	DESCRIPTION	WEIGHT (LB) FRONT	REAR
	Z8FT1X	NOX LIMITS	CARB LEGACY / EPA (200MG/HP/HR), 50 State Idle Compliance	0	0
S	Y7BC1X	IDLE EMISSION LABEL LOCATION (CA in PC29 only)	IDLE EMISSION LABEL LOCATION, LOWER LH CORNER OF DRIVER DOOR	0	0
S	DPF04F	DPF DIESEL PARTICULATE FILTER	CLEARTECH ONE BOX E.A.T.S. RH SIDE UNDER CAB US17 / US21	0	0
S	MCF07F	CHASSIS MOUNTED EMISSIONS FINISH	W/O DEF COVER & PAINTED DPF COVER	0	0
S	DF10O1	DIESEL EXHAUST FLUID TANK	6.6 GALLON (25 L) 22" LEFT SIDE FUEL TANK MTD	89	31
	130AD7	EXHAUST	SINGLE VERTICAL RIGHT SIDE CAB MOUNTED, LOWER VENTURI DIFFUSER, TURNED END	-35	-17
	KRXAPX	EXHAUST STACK HEIGHT	9' 6" FROM GROUND	0	0
S	Q0AA1X	EXHAUST - BRIGHT FINISH	W/O BRIGHT FINISH EXHAUST	0	0
	78AAAX	EMISSION ON BOARD DIAG CONTROL	EMISSION OBD, DISPLAY ONLY, USA2025	0	0

		ENGINE EQUIPMENT	DESCRIPTION	WEIGHT (LB) FRONT	REAR
S	125045	AIR CLEANER	UNDER HOOD SINGLE ELEMENT DRY TYPE W/AIR INTAKE FROM BOTH SIDES OF HOOD	0	0
S	121AA5	BUG SCREEN	BLACK ALUMINUM BUG SCREEN MOUNTED BEHIND GRILLE, WITHOUT WINTER FRONT COVER	0	0
S	1130G3	AIR COMPRESSOR/DRYER	WABCO HEATED SS-HP AIR DRYER W/ WABCO 636 (37.4 CFM) AIR COMPRESSOR	0	0
S	KOXA1X	AIR DRYER POSITION (CA)	AIR DRYER POSITION STANDARD	0	0
S	132AB9	ALTERNATOR	DELCO 12V 160A (28SI) BRUSH-TYPE	16	0
S	316AA5	BATTERIES	(3) MACK 12V 760/2280 CCA THREADED STUD TYPE	7	3
S	393AA2	BATTERY BOX - MOUNTING (x)	LH RAIL UNDER CAB FORWARD OF FUEL TANK (3 BATTERY MAX)	-8	-4
S	L5XA1X	BATTERY BOX COVER	MOLDED PLASTIC	0	0
	318AA3	BATTERY DISCONNECT SWITCH	FLAMING RIVER BIG SWITCH WIRED TO POSITIVE SIDE	3	0
	NCXD1X	STARTER MOTOR	12 VOLT MELCO STARTER (MITSUBISHI ELECTRIC)	31	0
	110AA6	ENGINE BRAKE	MACK MP8 POWERLEASH	0	0
S	JMXB1X	VEHICLE/TRAILER STOP LAMP APPLICATION (CA)	VEHICLE AND TRAILER (IF APPLICABLE) STOP LAMPS ACTIVATE UPON SERVICE BRAKE APPLICATION ONLY(3899000)	0	0
S	J2EAAX	ENGINE BRAKE ACTIVATION	ENGINE BRAKE ACTIVATION, BASIC	0	0
S	118AB8	FAN DRIVE	BEHR FAN AND ELECTRONIC MODULATING VISCOUS FAN DRIVE	0	0
S	119AI9	COOLANT PROTECTION	ETHYLENE GLYCOL FULLY FORMULATED COOLANT (50/50 MIX DYED PINK) TO -34DEG, W/ FILTER	0	0
	H9XK1X	RADIATOR TYPE	RADIATOR, CORE AREA W/O FEPTO 1345sq in (86sq dm), CORE AREA W/ FEPTO 1296sq in (83sq dm)	0	0
S	124AA3	HOSES - RADIATOR/HEATER	MACK EPDM RADIATOR & HEATER HOSES	0	0
S	293043	FUEL-WATER SEPARATOR	MACK W/MANUAL DRAIN VALVE V2 (INTEGRAL W/ PRIMARY FUEL FILTER)	0	0
S	MBXA1X	RELOCATE FUEL FILTER (CA)	STANDARD FUEL FILTER POSITION	0	0
S	MCA04A	ENGINE HEATERS	120v 1500w BLOCK HEATER ONLY	0	0
	5NXA1X	ENGINE BLOCK HEATER	120V 1500W ENGINE BLOCK HEATER	5	0
	MAH01I	PLUG QUANITY & TYPE	SINGLE (1) 120V-15A PLUG	0	0
S	QHXC1X	OIL SUMP	OIL PAN	0	0
S	2YBZ1X	EMERGENCY ENGINE STOP (CA)	WITHOUT ENGINE STOP, EMERGENCY	0	0

		CLUTCH/TRANS EQUIPMENT	DESCRIPTION	WEIGHT (LB) FRONT	REAR
S	49200B	GEAR SHIFTER	MACK mDRIVE-PREMIUM SHIFTER	0	0

TECHNICAL SPECIFICATION *(cont.)*

	CLUTCH/TRANS EQUIPMENT		DESCRIPTION	WEIGHT (LB) FRONT	WEIGHT (LB) REAR
S	133AC7	CLUTCH	ZF/SACHS SINGLE PLATE 17" (430MM) ORGANIC MATERIAL	0	0
S	MCB05B	CLUTCH ACTUATION SYSTEM & PEDAL PAD	WITHOUT CLUTCH CABLE SYSTEM	0	0
S	195045	DRIVELINE - MAIN	MERITOR RPL35, WITH CROSS SERRATED YOKE (PROPS-XL)	20	45
S	204014	DRIVELINE - INTERAXLE	MERITOR RPL25	0	36
S	76AXAX	DRIVESHAFT MAIN U-JOINT	UNIVERSAL JOINT CROSS SERRATED YOKE (where applicable)	0	0
S	8WAAAX	DRIVESHAFT INTERAXLE U-JOINT	HALF-ROUND UNIVERSAL JOINT	0	0
S	4LDA1X	TRANSMISSION OUTPUT TORQUE	TRANSMISSION OUTPUT TORQUE BASIC	0	0
S	7RXD1X	LUBRICANTS, TRANSMISSION	75W - 90 (SYNTHETIC LUBRICANT)	0	0
S	139049	TRANSMISSION OIL COOLER	MACK mDRIVE TRANSMISSION OIL COOLER MOUNTED LH SIDE OIL TO WATER COOLER	0	0
	3IAA2X	GRADE GRIPPER	GRADE GRIPPER	0	0

	FRONT AXLE EQUIPMENT		DESCRIPTION	WEIGHT (LB) FRONT	WEIGHT (LB) REAR
	240AA3	FRONT AXLE	20000# (9100 KG) MACK FXL20 STRAIGHT SPINDLE/UNITIZED BEARINGS	428	0
	244AB4	SPRINGS - FRONT	MACK TAPERLEAF 20000# (9100 KG) GROUND LOAD RATING, EQUAL BIAS	27	0
	241081	BRAKES - FRONT	MERITOR "S" CAM TYPE 16.5" x 6" Q+	29	0
	U3XC9X	BRAKE DRUMS - FRONT	BRAKE, FRONT, DRUM LIGHT WEIGHT TRUTURN	0	0
S	UDXA1X	DUST SHIELDS - FRONT	DUST SHIELDS FOR FRONT AXLE	5	0
	U0AA1X	SLACK ADJUSTERS - FRONT	HALDEX - AUTOMATIC	0	0
	V7AB1X	BRAKE CHAMBERS - FRONT	FRONT BRAKE CHAMBER MANUFACTURER, HALDEX	0	0
	0KXA1X	HUBS - FRONT	FERROUS	157	0
S	61500A	FRONT AXLE LUBRICANT	FRONT AXLE LUBE, FAG NLGI2 GREASE	0	0
S	1KAA1X	SHOCK ABSORBERS - FRONT	DOUBLE ACTING TYPE	0	0
	245AB0	STEERING	SHEPPARD SD110 + HD94	206	0

	REAR AXLE EQUIPMENT		DESCRIPTION	WEIGHT (LB) FRONT	WEIGHT (LB) REAR
	2680D8	REAR AXLE	46000# (20900kg) MACK S460R FABRICATED STEEL HOUSING	0	1,447
S	6MAA1X	WIDE TRACK AXLE OPTION	W/O WIDE TRACK AXLE	0	0
S	617003	DRIVE AXLE LUBRICANT	DRIVE AXLE LUBE, SHELL 75W90 SYNTHETIC OIL	0	0
S	01800R	CARRIER - REAR AXLE	150/151 SERIES (Tandem Mack Rear Axles up to 150,000lb GCW)	0	0
	254016	TRACTION DIFFERENTIAL	MACK INTERWHEEL POWER DIVIDER (LIMITED SLIP DIFFERENTIAL)	0	0
S	3LAC1X	POWER DIVIDER LOCKOUT	INTERAXLE POWER DIVIDER LOCKOUT, W/BUZZER & LIGHT	0	40
	TAXAWX	REAR AXLE RATIO	4.19 RATIO	0	0
	1860J6	REAR SUSPENSION	SS46 MACK CAMELBACK MULTILEAF 46,000 lb, STANDARD DUTY	0	1,930
	XZXA1X	TRUNNION BUSHING	BRONZE	0	36
S	GWXABX	BOGIE SPREAD, REAR	50" AXLE SPACING (BOGIE WHEELBASE)	0	34
	2AAABX	SHOCK INSULATORS	URETHANE SHOCK INSULATORS, HEAVY DUTY, HIGHLY RECOMMENDED W/SS582 & SS652 REAR SUSP	0	5
S	XYXB1X	TRANSVERSE TORQUE RODS	TRANSVERSE TORQUE ROD (REAR AXLE ONLY)	0	0
S	237037	AUX.SPRING BRAKE QTY	AUX SPRING BRAKE QTY, 4 CHAMBERS	0	20
S	253AA4	BRAKES - REAR	MERITOR "S" CAM 16.5"x7" Q+ (Total for QTY = 2)	0	-35
	U4XA2X	BRAKE DRUMS - REAR	MERITOR "MACHINE-TO-BALANCE" FULL CAST	0	5

TECHNICAL SPECIFICATION *(cont.)*

	REAR AXLE EQUIPMENT		DESCRIPTION	WEIGHT (LB) FRONT	WEIGHT (LB) REAR
S	U1AA1X	SLACK ADJUSTERS - REAR	HALDEX - AUTOMATIC (Total for QTY = 2)	0	0
	V1AB1X	REAR BRAKE CHAMBER SIZE	REAR SPRING BRAKE CHAMBERS 30/30 TYPE	0	0
	N5FAJX	BRAKE ORI REAR-MOST DRIVE AXLE	DRUM BRAKE CHAMBER ORIENTATION: High Mount - Rear of Axle - Chamber Down	0	0
S	300AS0	PARKING BRAKE CHAMBER	HALDEX "GOLD SEAL PLUS" (3" STROKE) BRAKE CHAMBERS (Total for QTY = 2)	0	0
S	0LXI5X	HUBS - REAR	IRON PRESET REAR HUB W/INTEGRATED SPINDLE NUT	0	318
	9GAABX	ABS SENSOR/CHANNEL OPTION	6S/6M SYSTEM SENSING BOTH REAR AXLES W/WHEEL END SENSORS	5	0
S	6980C8	ANTILOCK BRAKE SYSTEM	MACK ROAD STABILITY ADV.BENDIX ABS/ATC/RSA W/YAW CNTRLW/MUD/SNOW SW; REQ-TRUCK APPL 6S6M	0	0
S	URXD1X	AIR SYSTEM VALVE VENDOR	BENDIX SWITCHES AND VALVES WHERE POSSIBLE	0	0
S	H9CA1X	TRACTION CONTROL DISABLE (CA in PC29 only)	AUTOMATIC TRACTION CONTROL (ATC) FULL DISABLE SWITCH	0	0
S	3ZAA1X	SPRING BRAKE INVERSION VALVE	TRACTOR SPRING BRAKE INVERSION VALVE	5	0

	FRAME EQUIPMENT/FUEL TANKS		DESCRIPTION	WEIGHT (LB) FRONT	WEIGHT (LB) REAR
	271230	WHEELBASE	230"	157	157
	374057	AF (OVERHANG)	57"	-11	203
	MCE0CE	FRAME RAILS & LINERS	11.1 x 90 x 300mm - (0.437" x 3.54" x 11.81"); RBM 2,820,000 LB-IN	0	0
S	A0XH1X	FRONT FRAME LENGTH	FRONT FRAME LENGTH 725MM	36	-2
S	281AA5	CROSSMEMBERS	BOC AND INTERMEDIATE(S) STEEL HD BACK-TO-BACK CHANNEL	0	0
S	Q5AA1X	REAR CROSSMEMBER OPTIONS	STEEL CLOSING REAR CROSSMEMBER	-8	49
S	X6XA1X	TAPERED FRAME RAIL ENDS	WITHOUT TAPERED FRAME RAIL ENDS	0	0
	4DXP1X	FRONT BUMPER	FLUSH-STAINLESS CLAD ALUMINUM	98	-4
S	4ZAAAX	TRUNNION BRACKET	BASIC SOLUTION TRUNNION BRACKET, STD HEIGHT	0	0
	4EXF1X	TOWING DEVICE, FRONT	(2) CLEVIS	0	0
S	2RAA1X	FUEL LEVEL SENDER UNIT, LIQUID	BASIC FUEL LEVEL SENDER MOUNTED ON L.H TANK	0	0
S	288AF2	FUEL TANK - LH	66 GALLON (250 L) 22" ALUMINUM, SLEEVED D-SHAPED	142	71
S	290AA1	FUEL TANK - RH	W/O RH FUEL TANK	0	0
S	JHXB1X	FUEL LINE MATERIAL	BRAIDED HOSE	5	3
S	8520C2	FUEL FILLER NECK OPTIONS	WITHOUT FILLER NECK SCREEN, WITH NON-LOCKABLE FUEL TANK CAP	0	0
	12AA1X	FUEL SYSTEM - DUAL	W/O FUEL LINE OPTION	0	0
S	Q2AA1X	CAB ACCESS STEPS	STANDARD 2 STEP CAB ACCESS	0	0
S	223AA3	STEPS (BRIGHT) - FUEL TANK	STANDARD FINISH STEPS AND BRIGHT FINISH STRAPS	0	0

	AIR/BRAKE		DESCRIPTION	WEIGHT (LB) FRONT	WEIGHT (LB) REAR
S	141AA1	RELOCATE AIR RESERVOIRS	W/O RELOCATED AIR TANKS	0	0
S	UWXC1X	AIR TANK DRAIN VALVE	MANUAL (PETCOCK) DRAIN VALVES ON ALL TANKS	0	0
S	U2XB1X	AIR TANK MATERIAL & FINISH	STEEL AIR TANK PAINTED CHASSIS COLOR	0	0
S	3MBA1X	PARK BRAKE ALARM	ALARM TO SOUND WHEN DRIVER DOOR OPENED & PARKING BRAKE NOT ON	0	0
S	1JAAAX	PARKING BRAKE VALVE	SINGLE VALVE SYSTEM	0	0

TECHNICAL SPECIFICATION *(cont.)*

	ELECTRICAL		DESCRIPTION	WEIGHT (LB) FRONT	WEIGHT (LB) REAR
S	3120A2	ROOF & SIDE MARKER LIGHTS	(5) TRUCKLITE CHROME BULLET ROOF MARKER & STANDARD MARKER / DIRECTIONAL SIGNAL	0	0
S	LJXCAX	HEADLAMP BULB TYPE	HEADLAMP BULB TYPE, LED, HEATED	0	0
S	LSXJ7X	DAYTIME RUNNING LIGHTS	W/OVERRIDE SWITCH, PARK BRAKE & ENGINE RUNNING ACTIVATED	0	0
S	X2AA1X	DRL OVERRIDE SPEED THRESHOLD	DRL OVERRIDE SPEED THRESHOLD 8 KMPH (5 MPH)	0	0
S	NEXC1X	TAIL LAMPS	INCANDESCENT TAIL LAMPS	0	7

	TRAILER CONNECTIONS		DESCRIPTION	WEIGHT (LB) FRONT	WEIGHT (LB) REAR
S	WGXB1X	HAND CONTROL VALVE	W/O HAND CONTROL VALVE	-6	0
S	3SAZ1X	TRAILER CONNECTORS HOLDER	OMIT TRAILER CONNECTORS HOLDER	3	0

	PTO		DESCRIPTION	WEIGHT (LB) FRONT	WEIGHT (LB) REAR
	189AA6	TRANSMISSION MOUNTED PTO	PTRD-F, Single RH: SAE 1350/1410 Flange (Outer)	36	9
	D4AB1X	AMT/AUTOMATIC TRANS PTO FUNCT.	TRANSMISSION PTO FUNCTIONS ENHANCED	0	0
S	B83083	BODY BUILDER INTERFACE	BODY LINK III W/CAB PASS-THRU	5	5

	SPECIALTY EQUIPMENT		DESCRIPTION	WEIGHT (LB) FRONT	WEIGHT (LB) REAR
S	MCQ01Q	LANE SUPPORT SYSTEM (LSS)	WITHOUT LANE SUPPORT SYSTEM	0	0
S	2PEZ1X	DATA CAPTURE	WITHOUT DATA CAPTURE	0	0
S	1PAZ1X	SURVEILLANCE CAMERA OPTIONS (CA)	WITHOUT CAMERA	0	0

	CAB INTERIOR (A THRU G)		DESCRIPTION	WEIGHT (LB) FRONT	WEIGHT (LB) REAR
S	198048	SPEEDOMETER -&- GAUGES - UNIT(s) OF MEASURE	U.S. UNITS (PREDOMINANT)	0	0
	E1AAAX	GAUGE OIL TEMP-REAR AXLE	REAR AXLE OIL TEMP GAUGE IN DID (DRIVER INFORMATION DISPLAY)	0	0
S	4AXC1X	CLIMATE UNIT	ELECTRONIC CONTROLLED CLIMATE CONTROL AIR CONDITION	0	0
S	EEXA1X	CUPHOLDER	CUPHOLDER	0	0
S	I0XAHX	DOME LAMP, INTERIOR	(4) DOME LAMPS - DOOR AND SWITCH ACTIVATED	0	0
S	3XAA1X	DASH INDICATOR - LAMP BODY OUT OF POS	DASH MTD, INDICATOR BODY/HOIST UP "BODYBUILDER LAMP"	0	0
	7860E6	FIRE EXTINGUISHER	5LB (ABC RATED) MOUNTED BETWEEN DRIVER SEAT BASE AND DOOR VALVE AIMED REARWARD	9	0
S	184AA2	FLOOR COVERING	POLYURETHANE FLOOR MAT WITHOUT REMOVABLE INSERTS	0	0

	CAB INTERIOR (H THRU R)		DESCRIPTION	WEIGHT (LB) FRONT	WEIGHT (LB) REAR
S	C52082	INSTRUMENT CLUSTER LANGUAGE	DEFAULT: ENGLISH, SPANISH, FRENCH	0	0
S	20XA1X	KEY TYPES FOR DOORS	ALL CHASSIS KEYED AT RANDOM	0	0
S	13AA1X	KEYLESS ENTRY	W/O ELECTRONIC KEYLESS ENTRY	0	0

TECHNICAL SPECIFICATION *(cont.)*

		CAB INTERIOR (H THRU R)	DESCRIPTION	WEIGHT (LB) FRONT	WEIGHT (LB) REAR
S	E3XD1X	OVERHEAD CONSOLE	(2) STORAGE COMPARTMENTS AND NET RETAINERS W/CENTER MOUNTING FOR CB PROVISIONS	0	0
S	1740D4	RADIO/RADIO ACCOMMODATION	PREMIUM STEREO, AM/FM, MP3, WEATHER BAND, BLUETOOTH	0	0
S	73AC1X	RADIO - ANTENNA	RADIO ANTENNA, CAB MOUNTED BEHIND LH DOOR	0	0
	5BXC3X	RADIO ANTENNA - CB	PREP KIT FOR MOUNTING ON LT SIDE MIRROR (W/O ANTENNA)	3	0
S	0LAA1X	AUDIO SHUTOFF	AUTO SHUTOFF FOR RADIO ENTERTAINMENT SYSTEM WHEN VEHICLE IS ENGAGED IN REVERSE	0	0
S	1WAB1X	RADIO - BINDING POSTS FOR CB	POWER LEADS (5-WAY BINDING POSTS FOR CB RADIO) IN HEADER CONSOLE	0	0
S	5CXB2X	AUDIO SPEAKER LOCATION	SPEAKER LOCATION, IN DOORS, MIDDLE HIGH SIDE PANEL	0	0
S	5JXAIX	RADIO - CB RADIO MOUNTING	CB RADIO MOUNTING REINFORCEMENT IN HEADER CONSOLE	0	0
S	IFXB1X	REAR WALL STORAGE COMPARTMENT	STORAGE POUCH REAR	5	0

		CAB INTERIOR (S THRU Z)	DESCRIPTION	WEIGHT (LB) FRONT	WEIGHT (LB) REAR
S	004014	INTERIOR TRIM LEVELS	COMFORT TRIM PACKAGE, STEEL GRAY (Package 11A)	0	0
	196ABQ	SEAT - DRIVER'S	MACK-AIR, HIGH BACK, 4 CHAMBER AIR LUMBAR, BOLSTER, EXTENSION	67	16
	MAP06P	SEAT COVERING - DRIVER'S	DRIVER'S SEAT - BLENDED BLACK & GREY VINYL / CLOTH MIX	0	0
S	197AA1	SEAT - PASSENGER'S	MACK-FIXED, HIGH BACK	40	9
	MAQ07Q	SEAT COVERING - PASSENGER'S	PASSENGER'S SEAT - BLENDED BLACK & GREY VINYL / CLOTH MIX	0	0
	0HAA1X	SEAT - DUST COVER(S)	SEAT, DUST COVER FOR DRIVER'S SEAT	3	0
	3PXC1X	SEAT ARM REST(S)	INBOARD MOUNTED ARM REST, DRIVER'S & RIDER'S SEAT	5	3
S	592092	SEAT BELT(S)	LAP & SHOULDER (BOTH SEATS) CAB MOUNTED SHOULDER BELT ADJUSTMENT	0	0
S	D8XC1X	SEAT BELT WARNING INDICATOR	SEAT BELT REMINDER IN INSTRUMENT, WITH AUDIO	0	0
S	2QAA1X	STARTER SWITCH	KEY TYPE	0	0
S	161011	STEERING WHEEL	2 SPOKE URETHANE GRIP, SATIN ALUMINUM SPOKES, WITH SWITCHES	0	0
S	WSXBAX	WINDSHIELD TYPE	TWO PIECE WINDSHIELD	0	0
S	145AA1	CAB GLASS	TINTED WINDSHIELD & SIDE WINDOWS & REAR WINDOW (IF EQUIPPED)	0	0
S	JQXAAX	WINDSHIELD WASHER	W/O WINDSHIELD WASHER OPTION	0	0
S	148AA3	WINDSHIELD WIPERS	2 SPEED ELECTRIC MOTOR W/INTERMITTENT FEATURE	0	0

		CAB EXTERIOR	DESCRIPTION	WEIGHT (LB) FRONT	WEIGHT (LB) REAR
S	MCY02Y	HOOD LATCH TYPE & FINISH	STRAP TYPE HOOD LATCH WITH BLACK FINISH	0	0
S	MCG0AG	EXTERIOR TRIM FINISH AND PACKAGES	GRANITE BRIGHT AIR INTAKE	0	0
S	400010	GRILLE	BLACK FINISH BARS W/BRIGHT FINISH SURROUND GRILL MOUNTED	0	0
S	MCD03D	PASSENGER SIDE VISIBILITY OPTIONS	AUXILIARY WINDOW IN RH DOOR	3	0
S	2KXB1X	FENDER EXTENSIONS	FENDER EXTENSIONS	5	0
	5870B7	GRAB HANDLES	BF EXTERIOR CAB GRAB HANDLES, BLACK GRAB HANDLE RH INTERIOR WINDSHIELD POST	0	0
S	154AA2	HORN - AIR	(1) MACK RECTANGULAR SINGLE TRUMPET	5	0
S	LXXD1X	HORN - ELECTRICAL	DUAL TONE	5	0
S	1520B2	MIRRORS - EXTERIOR	FLAT MIRROR - POLISHED ALUMINUM FINSH, W/O LAMPS	0	0
S	153AA2	MIRRORS - CONVEX TYPE CAB DOORS	BRIGHT FINISH, LH & RH, 8" DIAMETER CONVEX	0	0

TECHNICAL SPECIFICATION *(cont.)*

	CAB EXTERIOR		DESCRIPTION	WEIGHT (LB) FRONT	WEIGHT (LB) REAR
	157037	SUN VISOR - EXTERIOR	SUN VISOR, EXTERIOR, STAINLESS STEEL (UNPAINTED)	9	0

	AERODYNAMIC DEVICES		DESCRIPTION	WEIGHT (LB) FRONT	WEIGHT (LB) REAR
S	159AA1	CAB AERODYNAMIC PACKAGES	WITHOUT CAB AERODYNAMIC DEVICES	0	0
S	MCM998	FRONT CHASSIS AERODYNAMIC PACKAGE	WITHOUT FRONT AERODYNAMIC FAIRINGS	0	0

	WHEELS & TIRES		DESCRIPTION	WEIGHT (LB) FRONT	WEIGHT (LB) REAR
	9006S0	TIRES BRAND/TYPE - FRONT	385/65R22.5 L CONTINENTAL HAC 3 (19840 lbs) (Total for QTY = 2)	340	0
	5312W1	WHEELS - FRONT	22.5x12.25 ALCOA 82462x HIGH POLISHED ALUMINUM, 5.81" OFFSET, 10 HAND HOLE (Total for QTY = 2)	133	0
	9016D1	TIRES BRAND/TYPE - REAR	11R22.5 H CONTINENTAL HDC 3 (24020 lbs) (Total for QTY = 8)	0	1,165
	34608Q	WHEELS - REAR	22.5x8.25 ALCOA 88067x HIGH POLISHED ALUMINUM, 6.60" OFFSET, 10 HAND HOLE (Total for QTY = 8)	0	318
S	15XABX	VALVE STEMS & CAPS	STANDARD VALVE STEMS AND CAPS	0	0
S	MCH03H	FRONT HUB/WHEEL TRIM	WITHOUT FRONT HUB/WHEEL TRIM	0	0
S	MCI03I	REAR HUB/WHEEL TRIM	WITHOUT REAR HUB/WHEEL TRIM (Total for QTY = 2)	0	0
S	80AA1X	WHEEL NUT & FINISH - FRONT (CA)	WHEEL NUT BASIC FINISH, FRONT	0	0
S	3PBA1X	WHEEL NUT & FINISH - REAR (CA)	WHEEL NUT BASIC FINISH, REAR	0	0

	COMMUNICATION SYSTEMS		DESCRIPTION	WEIGHT (LB) FRONT	WEIGHT (LB) REAR
S	3YAA1X	CO-PILOT - DISPLAY FEATURES ACCESS LEVEL	CO-PILOT DISPLAY, DRIVER ACCESS LEVEL 1	0	0
S	M30060	TELEMATIC GATEWAY	TELEMATICS GATEWAY, 4G/LTE AND WLAN SYSTEM WITH DIAGNOSTIC SERVICES	0	0

	ENGINE ELECTRONICS		DESCRIPTION	WEIGHT (LB) FRONT	WEIGHT (LB) REAR
S	WOXA1X	SHUTDOWN-ENG.OIL PRESSURE	OIL PRESSURE, ENGINE SHUTDOWN	0	0
S	WMXA1X	SHUTDOWN-ENG.COOLANT TEMP	COOLANT TEMP, ENGINE SHUTDOWN	0	0
S	K5XA2X	ENG /OIL TEMP SHUTDOWN	ENGINE PROTECTION (SHUTDOWN)	0	0
	C7AABX	FAN ENGAGEMENT TIME-A/C	ENG FAN CONTROL, A/C ON, TIME SETTING, 60 SEC	0	0
S	K7XY1X	LOW IDLE ENGINE RPM	IDLE CONTROL, 600 RPM	0	0
S	X0AB0X	IDLE RPM UP W/LOW VOLTAGE	INCREASE 10 MINUTE MAXIMUM TIME	0	0
S	M3CA1X	IDLE S/D ABS TAMPER CHECK	IDLE SHUTDOWN ABS TAMPER CHECK, ENABLED	0	0
S	B1ACAX	IDLE S/D WARNING TIME	30 SEC IDLE S/D WARNING TIME	0	0
S	A8AALX	IDLE S/D IF WARM-UP TEMP	38C DEG (100F), WARM UP TEMP DELAY	0	0
S	A4AAEX	IDLE S/D WARM-UP TIMER	5 MIN. WARM UP TIME DELAY	0	0
S	A6AABX	IDLE S/D IF PTO ACTIVE	ENGINE IDLE SHUTDOWN TIME OVERRIDDEN IF PTO ACTIVE	0	0
S	B0AAAX	IDLE SHUTDOWN IF POWER > LIMIT	ENG IDLE SHUTDOWN TIME OVERRIDDEN IF TORQUE > THAN LIMIT	0	0
S	M4CB1X	IDLE S/D OVERIDE %ENGINE LOAD	IDLE SHUTDOWN OVERIDE UPTO 20% ENGINE LOAD THRESHOLD	0	0
S	D2AAFX	AMBIENT TEMP MIN TRESHOLD	AMBIENT TEMP MIN TRESHOLD, 16 DEG C, (60 DEG F)	0	0
S	D3AAEX	AMBIENT TEMP MAX TRESHOLD	AMBIENT TEMP MAX TRESHOLD, 27 DEG C, (80 DEG F)	0	0

TECHNICAL SPECIFICATION *(cont.)*

	ENGINE ELECTRONICS		DESCRIPTION	WEIGHT (LB) FRONT	WEIGHT (LB) REAR
S	B3ABAX	EHT, MAX ROAD SPEED	ELECTRONIC HAND THROTTLE, MAX ROAD SPEED, 16 KMH (10 MPH)	0	0
S	B6ABAX	EHT, MAX ENG SPEED	ELECTRONIC HAND THROTTLE, MAX ENGINE SPEED, 1000 RPM	0	0
S	B4ADAX	EHT, MIN ENG SPEED	ELECTRONIC HAND THROTTLE, MIN ENGINE SPEED, 700 RPM	0	0
S	B9AABX	EHT, SPEED RAMP RATE	ELECTRONIC HAND THROTTLE, SPEED RAMP RATE, 100 RPM/SEC	0	0

	TRANSMISSION ELECTRONICS		DESCRIPTION	WEIGHT (LB) FRONT	WEIGHT (LB) REAR
S	M050U5	TRANSMISSION DRIVE MODE PACKAGES, mDRIVE	mDRIVE- ENHANCED CONSTRUCTION - ECON, PERF, & PERF+ DRIVE MODES, MANUAL RETURN (premium)	0	0
S	6SAA1X	mDRIVE MACKCELLERATOR	MACKCELLERATOR ENABLE	0	0
S	779001	TRANSMISSION ELECTRONICS PACKAGE	W/O ELEC TRANS PACKAGE OPTION (all non-Allison transmissions)	0	0
	B1EA1X	TRANSM AUTO NEUTRAL ON P-BRAKE	mDRIVE TRANSMISSION PARK BRAKE AUTO NEUTRAL	0	0
S	MAV01V	TRANSMISSION ELECTRONIC SHIFTING PROPERTIES	W/O ALLISON FUELSENSE 2.0 PROGRAMMING	0	0

	VEHICLE ELECTRONICS		DESCRIPTION	WEIGHT (LB) FRONT	WEIGHT (LB) REAR
S	JCXE6X	ROAD SPEED LIMIT (RSL)	105 KM/H ROAD SPEED LIMITER (65MPH)	0	0
S	Y3CC1X	PEDAL SPEED LIMITER	101 KM/H PEDAL ROAD SPEED LIMITER (63MPH)	0	0
S	JDXA1X	CRUISE CONTROL	CRUISE CONTROL	0	0
S	JFXLLX	CRUISE CONTROL, MAX SPEED	MAX CRUISE, 105 KPH (65 MPH)	0	0
S	E3AACX	CRUISE CONTROL MIN SPEED	MIN CRUISE, 32 KPH (20 MPH)	0	0
S	E4AAAX	CRUISE RESUME WITH CLUTCH	CRUISE RESUME WITH CLUTCH	0	0
S	E5AACX	ENG BRAKE ENGAGE IN CRUISE	ENG BRK ENGAGE IN CRUISE, 3 MPH, ABOVE SET SPEED	0	0
	L2CB1X	PDLO ENGAGED VLS	POWER DIVIDER LOCK OUT (PDLO) ROAD SPEED LIMIT 24KMH (15MPH)	0	0
	Q6FZ1X	DIFF LOCK SPEED LIMIT	WITHOUT DIFFERENTIAL LOCK ROAD SPEED LIMIT	0	0
S	W5BA1X	MAXIMUM ENG SPEED AT 0 MPH	1000 MAXIMUM ENGINE SPEED AT 0 MPH	0	0
S	A4BAAX	SPEED SENSOR TAMPERING DETECTION	DETECTION OF SPEED SENSOR TAMPERING, ENABLE	0	0
S	8RXAEX	PWR.LIMIT LVL.-MPH SENSOR	ENG TORQUE LIMITED TO 50%, IF SPEED SENSOR TAMPER DETECTED	0	0
S	0PAZ1X	DRIVER PERFORMANCE & BONUS PARAMETERS	WITHOUT DRIVER PERFORMANCE PARAMETERS	0	0
S	G5AAHX	DATAMAX ENGINE OVERSPEED-COMPANY	ENGINE OVERSPEED, ALL CONDITIONS, TIME LOG IF ABOVE 2200 RPM	0	0
S	G2AAGX	DATAMAX ENGINE OVERSPEED-FUEL	ENGINE OVERSPEED, FUELED, TIME LOG IF ABOVE 2100 RPM	0	0
S	G4AAUX	DATAMAX VEHICLE OVERSPEED-ALL	VEHICLE OVERSPEED,ALL COND, TIME LOG IF ABOVE 75MPH (121KMH)	0	0
S	G3AAPX	DATAMAX VEHICLE OVERSPEED-FUEL	VEHICLE OVERSPEED, FUELED, TIME LOG IF ABOVE 70MPH (113KMH)	0	0
S	G1AABX	DATAMAX IDLE LOG DELAY	ENGINE IDLE DELAY TO START LOG, 2 MIN	0	0
S	W9A01X	PERIODIC TRIP LOG DAY OF MONTH	PERIODIC TRIP LOG, DAY 1 OF THE MONTH	0	0

	PTO ELECTRONICS		DESCRIPTION	WEIGHT (LB) FRONT	WEIGHT (LB) REAR
S	Y9CR1X	TRANS PTO1 SPLITTER RANGE	PTO1 FOR SPLITTER RANGE - KEYPAD REMOTE CONTROLLED	0	0
S	Z1CR1X	TRANS PTO2 SPLITTER RANGE	PTO2 FOR SPLITTER RANGE - KEYPAD REMOTE CONTROLLED	0	0
S	F3AAEX	PTO1 SINGLE SPEED CONTROL RPM.	PTO 1ST, SINGLE SPEED SETTING, 1000 RPM	0	0

TECHNICAL SPECIFICATION *(cont.)*

	PTO ELECTRONICS		DESCRIPTION	WEIGHT (LB) FRONT	WEIGHT (LB) REAR
S	F5AABX	PTO 1ST, MAX ROAD SPEED	1ST PTO, MAX ROAD SPEED, 10 MPH (16 KPH)	0	0
S	F6AABX	PTO 1ST, SPEED RAMP RATE	PTO 1ST, SPEED RAMP RATE 100 RPM/SEC	0	0
S	F7AAPX	PTO 1ST, MAX ENGINE SPEED	PTO 1ST, MAX ENGINE SPEED, 2100 RPM	0	0
S	F8AAGX	PTO 1ST, ROAD SPEED LIMIT	PTO 1ST, ROAD SPEED LIMIT, 97 KMH (60 MPH)	0	0
S	F9AABX	PTO 1ST, MINIMUM ENGINE SPEED	PTO 1ST, MINIMUM ENGINE SPEED, 600 RPM	0	0
S	H6AAEX	PTO 2ND, SINGLE SPEED SETTING	PTO 2ND, SINGLE SPEED SETTING, 1000 RPM	0	0
S	H0AABX	PTO 2ND, MAX ROAD SPEED	2ND PTO, MAX ROAD SPEED, 10 MPH (16 KPH)	0	0
S	G9AABX	PTO 2ND, SPEED RAMP RATE	PTO 2ND, SPEED RAMP RATE 100 RPM/SEC	0	0
S	H7AANX	PTO 2ND, MAX ENGINE SPEED	PTO 2ND, MAX ENGINE SPEED, 2100 RPM	0	0
S	H5AAGX	PTO 2ND, ROAD SPEED LIMIT	PTO 2ND, ROAD SPEED LIMIT, 97 KMH (60 MPH)	0	0
S	G8AABX	PTO 2ND, MINIMUM ENGINE SPEED	PTO 2ND, MINIMUM ENGINE SPEED, 600 RPM	0	0

	PAINT		DESCRIPTION	WEIGHT (LB) FRONT	WEIGHT (LB) REAR
S	950AD0	PAINT DESIGN	SINGLE COLOR	0	0
S	924014	PAINT TYPE	SOLID PAINT	0	0
S	944AA7	PAINT COLOR - FIRST COLOR	MACK WHITE; P9188	0	0
S	945998	PAINT COLOR - SECOND COLOR	NO SECOND TRUCK COLOR PROVIDED; NO COLOR	0	0
S	946998	PAINT COLOR - THIRD COLOR	NO THIRD TRUCK COLOR PROVIDED; NO COLOR	0	0
S	996AA3	PAINT - CAB PAINT SYSTEM	PAINT - CAB, URETHANE CLEAR COAT	0	0
S	MPB944	CAB COLOR	SAME AS FIRST COLOR - CAB	0	0
S	MPD944	HOOD COLOR	SAME AS FIRST COLOR - HOOD	0	0
S	MPC998	SLEEPER ROOF COLOR	WITHOUT SLEEPER ROOF COLOR	0	0
S	MPA998	ROOF FAIRING COLOR	WITHOUT ROOF FAIRING	0	0
S	95103K	CHASSIS RUNNING GEAR	MACK BLACK (60 GLOSS); 250-12370	0	0
	958028	BUMPER	W/O OPTIONAL BUMPER PAINT	0	0
S	959019	FUEL TANK - ***NO INVENTED VARIANTS ALLOWED in the FUEL TANK PAINT FAMILY***	W/O OPTIONAL FUEL TANK PAINT	0	0
S	962032	HUBS & DRUMS-FRONT	SAME AS CHASSIS RUNNING GEAR	0	0
S	963033	HUBS & DRUMS-REAR	SAME AS CHASSIS RUNNING GEAR	0	0

	CALCULATED CODES - KAX		DESCRIPTION	WEIGHT (LB) FRONT	WEIGHT (LB) REAR
S	9JXA1X	PROPCALC SELECTION	YES, THE ORDER MUST BE CALCULATED	0	0

	BASE WARRANTY & PURCHASED COVERAGES		DESCRIPTION	WEIGHT (LB) FRONT	WEIGHT (LB) REAR
S	898003	VEHICLE WARRANTY TYPE	HEAVY DUTY WARRANTY CLASSIFICATION	0	0
S	M50030	BASIC CHASSIS COVERAGE	HEAVY DUTY STANDARD BASE COVERAGE 12 MONTHS/100,000 MILES (161,000 KM)	0	0
	M8301T	EMISSION - SURCHARGE	EPA (only) for Mack MP7 / MP8 Diesel	0	0
S	M51021	ENGINE WARRANTY	MACK MP7/MP8 BASE ENGINE COVERAGE 24 MONTHS / 250,000 MILES (402,000KM)	0	0
S	M52022	EMISSION COMPONENT COVERAGE	US and CANADA EQUIPPED VEHICLE EMISSION COMPONENTS COVERAGE 60 MONTHS/100,000 MILES (161,000 KM)	0	0

TECHNICAL SPECIFICATION *(cont.)*

BASE WARRANTY & PURCHASED COVERAGES			DESCRIPTION	WEIGHT (LB) FRONT	WEIGHT (LB) REAR
S	M54104	TRANSMISSION WARRANTY	36 MONTHS: STANDARD mDRIVE HD TRANSMISSIONS HEAVY DUTY WARRANTY	0	0
S	M550G7	CARRIER & AXLE HOUSING WARRANTY	STANDARD MACK HEAVY DUTY COVERAGE 60 MONTHS / 500,000 (804,672 KM)	0	0
S	M56026	AIR CONDITIONING WARRANTY	AIR CONDITIONING STANDARD COVERAGE (Sealed System Only) 12 MONTHS UNLIMITED MILEAGE	0	0
S	M57027	CHASSIS TOWING WARRANTY	STANDARD NORMAL / HEAVY DUTY CHASSIS TOWING 90 DAYS OR 5,000 MILES	0	0
S	M58028	ENGINE TOWING WARRANTY	STANDARD MACK ENGINE TOWING COVERAGE 24 MONTHS/250,000 MILES (402,000 KM)	0	0

CONNECTED SERVICES			DESCRIPTION	WEIGHT (LB) FRONT	WEIGHT (LB) REAR
S	S03011	MACK INTEGRATED UPTIME	MACK INTEGRATED UPTIME - 24 MONTHS	0	0
	S04011	MACK CONNECT LOCATION & REPORTING	MACK CONNECT LOCATION & REPORTING - 24 MONTHS	0	0
S	S05010	FLEET INTEGRATION	WITHOUT FLEET INTEGRATION	0	0
S	S06400	PARTNERED SERVICES	NO PARTNERED SERVICES PROVIDED	0	0

	FRONT	REAR
FRONT / REAR AXLE WEIGHTS (LB)	9518	8347
TOTAL WEIGHT (LB)	17865	

PERFORMANCE - PREDICTOR

Inputs Required	DWGRef	Inputs	UOM
Vehicle Type		Aero Muscle Hood - Roof Fairing (0.60)	MPH
Performance Level		>67 MPH / >108KPH	MPH
Frontal Area		110.0	FEET²
Accessory Power Loss		11.0	HP

VEHICLE SPECIFICATION SUMMARY		
Model		GRANITE 64FR
Gross Combination Weight		TRUCK ONLY - NO TRAILER TOWING PROVISIONS PROVIDED
Vehicle Application		ON-OFF HIGHWAY, STARTING GRADES<18%
Body/Trailer Type		
Loading/Unloading Surface Type		CONCRETE LOADING AND / OR UNLOADING SURFACE
Engine		MP8-445C MACK 445HP @ 1400-1700 RPM (PEAK) 2100 RPM (GOV) 1850 LB-FT, US'21
Peak Power	HP	445.0 @ 1400 - 1700
Peak Torque	Newton Meters	2508 @ 1000
Transmission		MACK TMD12AFO-HD mDRIVE HD 12 SP-(OVERDRIVE)
Rear Axle		46000# (20900kg) MACK S460R FABRICATED STEEL HOUSING
Rear Axle Ratio		4.19
Rear Tire		11R22.5 H CONTINENTAL HDC 3 (24020 lbs)
Tire Revolutions per	Mile	493
Total Reduction		3.27

CALCULATED PERFORMANCE SUMMARY					
	Speed	UOM	RPM	Desired / Recommended Value	Status
Engine RPM @ 65 MPH	65.2	MPH	1750		
Engine RPM @ Desired Cruise Speed	65.2	MPH	1750	1100 - 1300 rpm	CHECK!
Engine RPM @ Road Speed Limit (RSL)	65.2	MPH	1750	< 2100 rpm	OK
Sweet Spot Cruise Speed Range in Top Gear	41.0 - 48.5	MPH	1100 - 1300		
Top Gear Speed Range	37.3 - 78.3	MPH	1000 - 2100	65.2 MPH	OK
Minimum Practical Speed In Reverse	1.3	MPH	600		
Maximum Practical Speed in Reverse	4.4	MPH	2100		
Minimum Practical Speed In Lowest Forward Gear	1.5	MPH	600		
Maximum Practical Speed In Lowest Forward Gear	5.2	MPH	2100		

	Concrete / Asphalt	UOM		
Wheel HP Required at (65 MPH) Cruise Speed	226.3 / 248.2	HP		
Wheel HP Required at (75 MPH) Road Speed Limit	226.3 / 248.2	HP		
Wheel HP Required at (92 MPH) Top Speed	338.4 / 365.7	HP		

PERFORMANCE - PREDICTOR *(cont.)*

VEHICLE SPECIFICATION SUMMARY			
Gradeability		**Recommended Min. Gradeability in Top Gear**	
Maximum in Top Gear (Concrete)	3.6%	0.0%	OK
Maximum in Top Gear (Asphalt)	3.4%	0.0%	OK
Startability		**Recommended Min. Startability**	
In Lowest Gear	36.7%	18.0%	OK
Loading/Unloading Surface Type	CONCRETE LOADING AND / OR UNLOADING SURFACE		
		Recommended Speed on 1.5% Grade	
Speed on a 1.5% Grade (Concrete)	66.2 MPH	>67 MPH	CHECK!
	@1775 rpm in 12th gear	PL5	
Suggested Value for Gear Down Vehicle Speed	RSL - 10		
Driveability Rating	**Status**		
100% Max Power available after shift	Acceptable		
>95% Very Good >90% Acceptable			
Performance Level	**Recommended Speed on 1.5% Grade**	**Min. Gradeability in Top Gear**	
PL5 - High Performance	>67 MPH	1.9%	
PL4 - Performance	61 - 67 MPH	1.7%	
PL3 - Economy	54 - 60 MPH	1.5%	
PL2 - Fleet / Construction	47 - 53 MPH	1.3%	
PL1 - Heavy Haul	40 - 46 MPH	1.1%	

RPM at 65 MPH

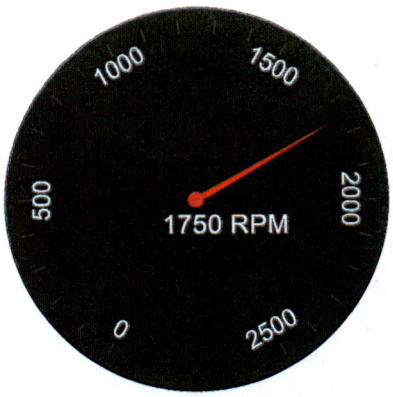



RPM at Cruise Speed

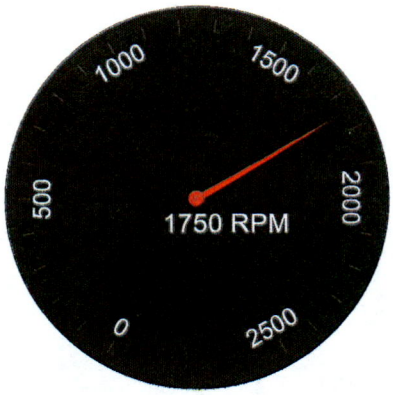



	MPH	RPM
Minimun of Engine Range	37.3	1000.00
Minimum of Economy Range	41.0	1100.00
Cruise Speed	65.2	1750.12
Maximum of Economy Range	48.5	1300.00
Road Speed Limit	65.2	1750.12
Maximum of Engine Range	78.3	2100.00

Forward Geared Speed

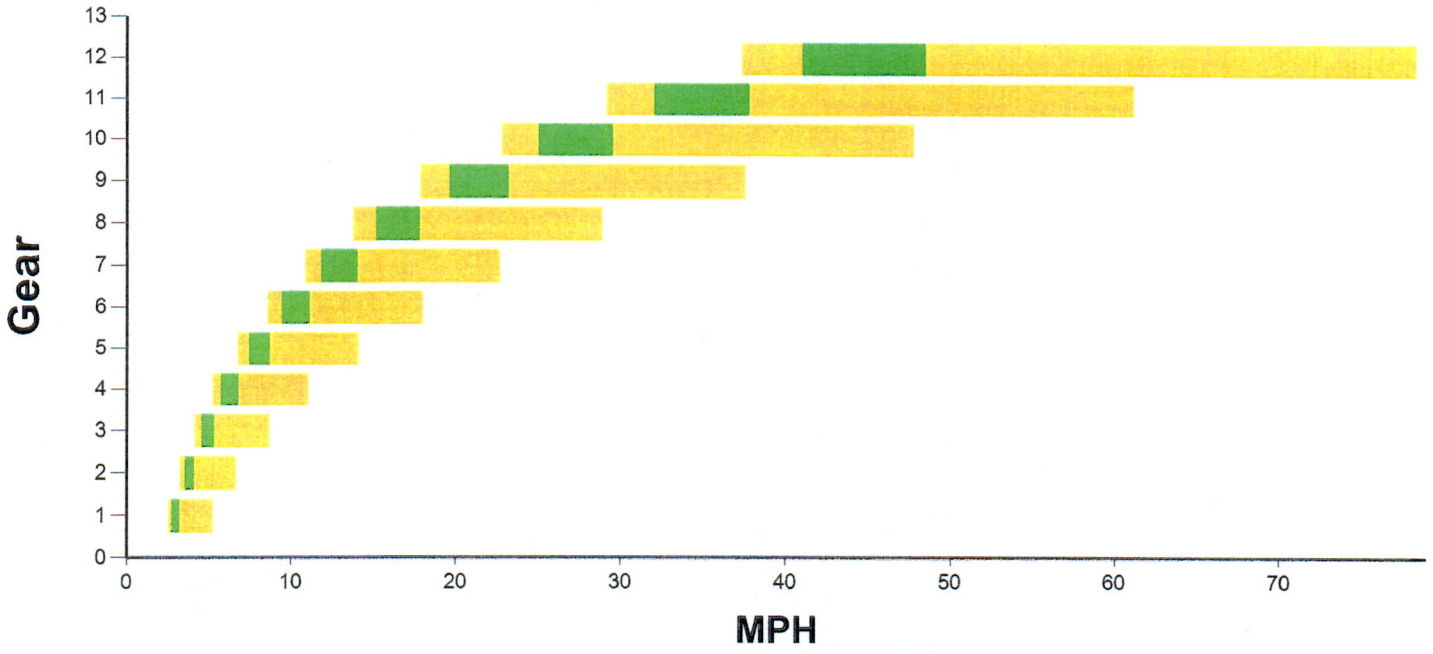

Reverse Geared Speed

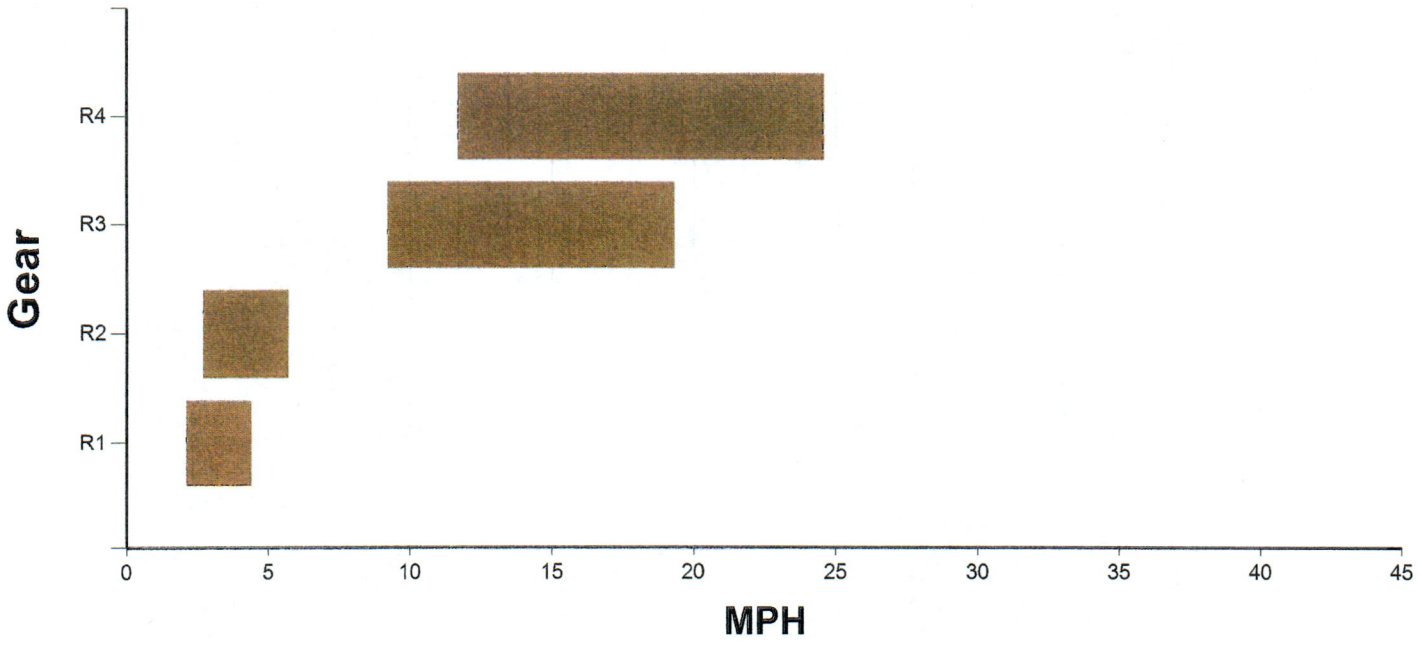

Startability

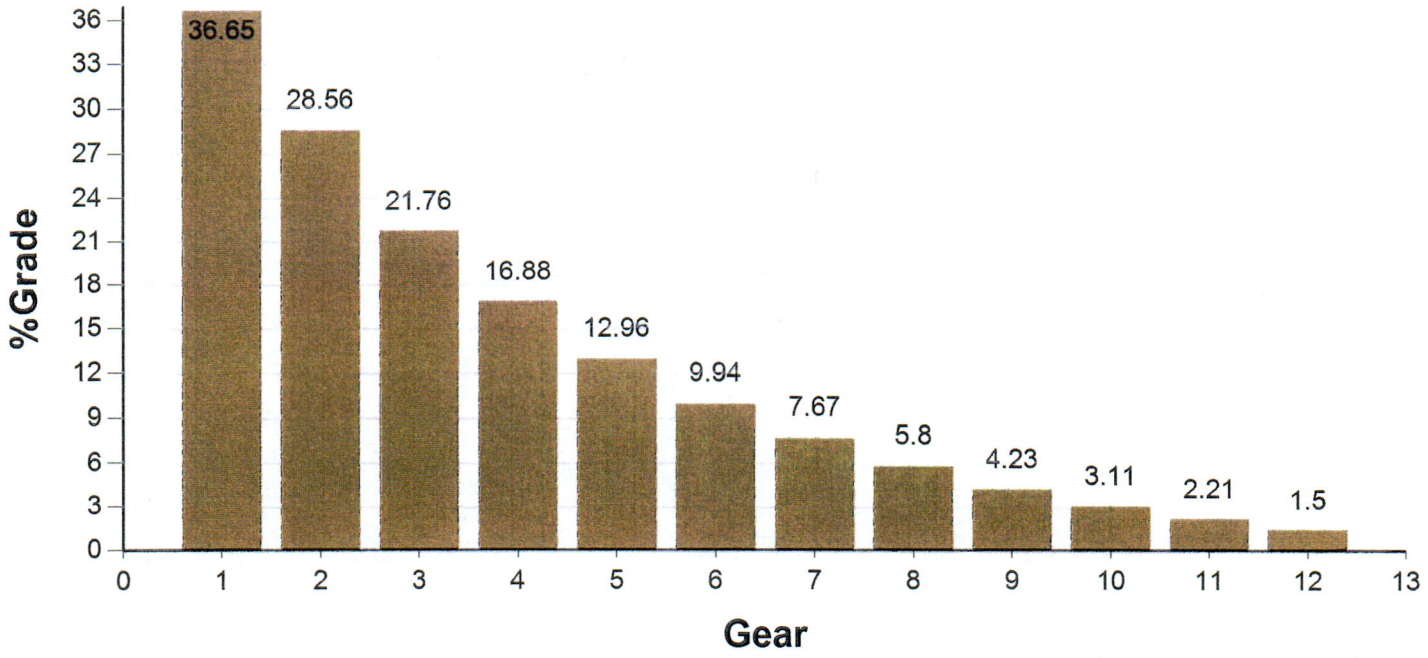

Gradeability at Max Torque

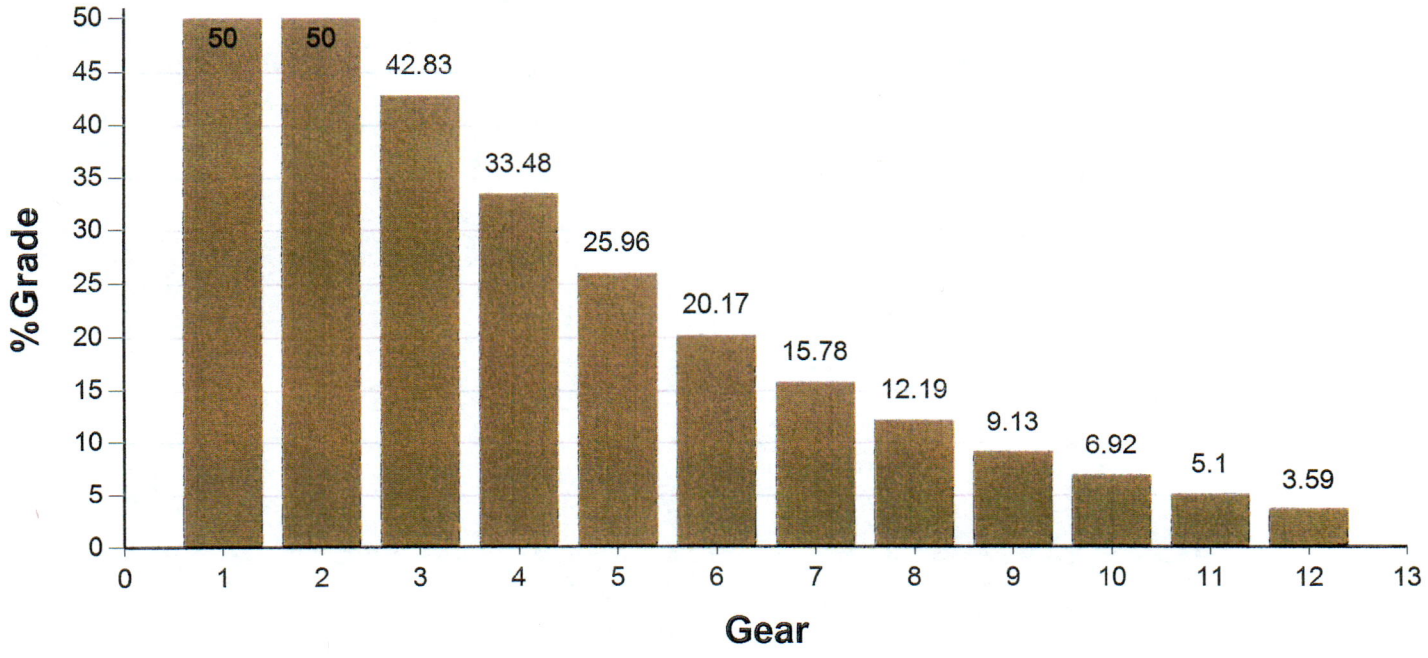

Shift Chart

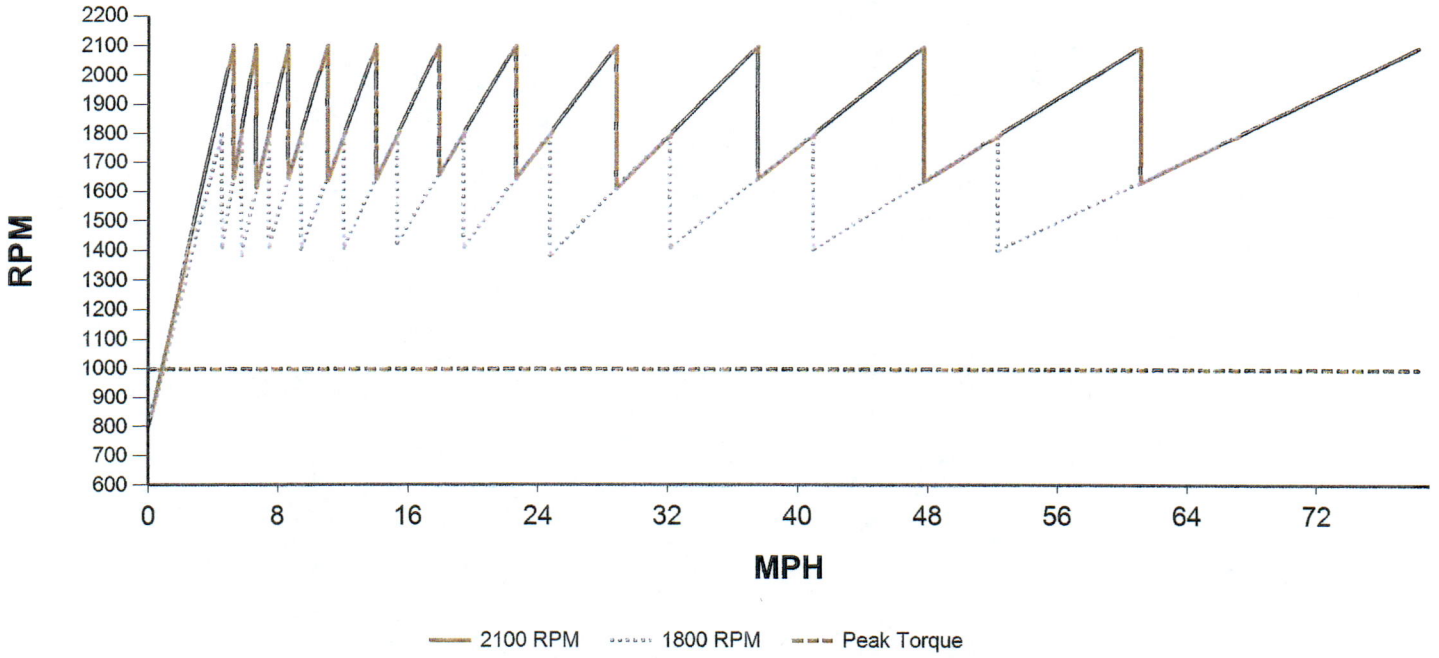

Horsepower VS. Speed

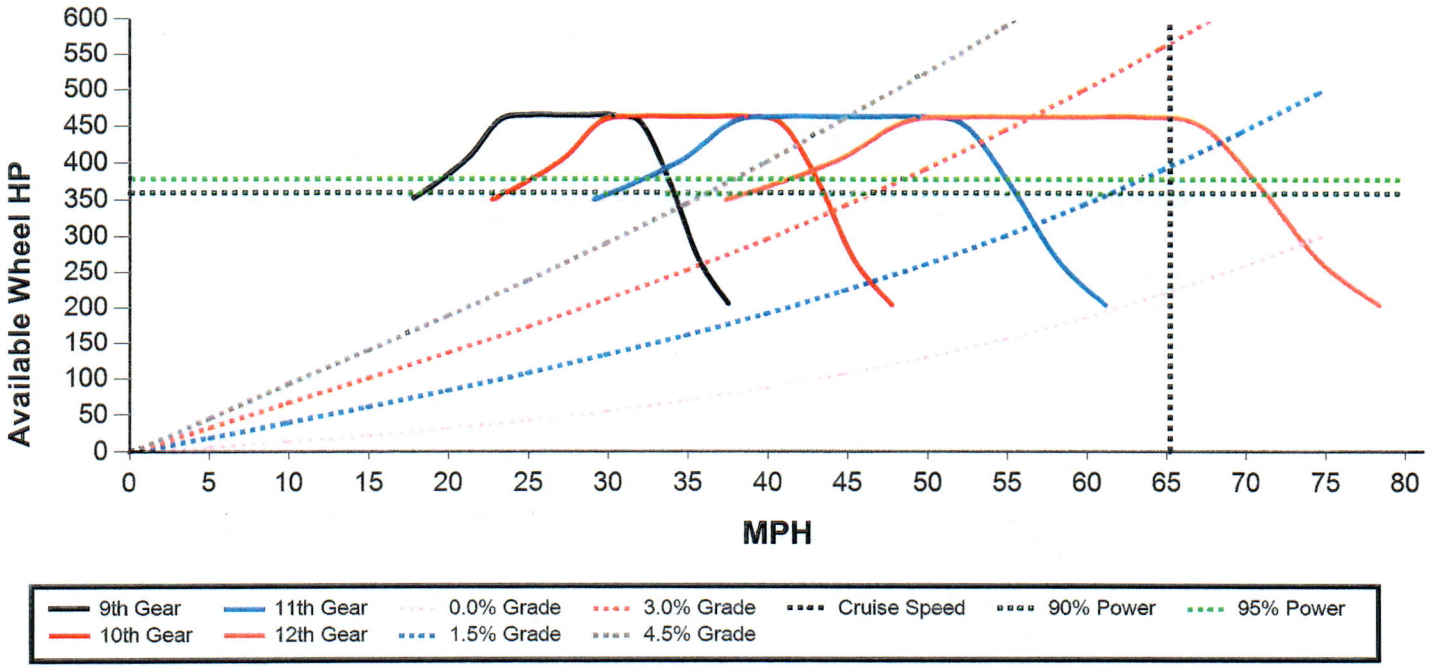

VEHICLE SPECIFICATION/CALCULATED PERFORMANCE SUMMARY			
Description	Dwg Ref	Length	UOM
Front Frame Extension	**FE**	0.0	INCHES
Bumper to Front Axle	**BA**	29.0	INCHES
Eff. Bumper to Front Axle	**N/A**	29.0	INCHES
Wheelbase	**WB**	230.1	INCHES
Rear Overhang	**OH**	57.5	INCHES
Overall Length	**OL**	316.6	INCHES
Bumper to Back of Cab	**BBC**	116.5	INCHES
Eff. Bumper to Back of Cab	**EBBC**	116.5	INCHES
Eff. Cab to Rear Axle	**ECA**	142.6	INCHES
Eff. Front Axle to Back of Cab	**EAC**	87.5	INCHES
Eff. Cab to End of Frame	**ECEF**	200.1	INCHES
Unladen Frame Height	**FH**	44.6	INCHES
Cab Height	**CH**	70.9	INCHES
Overall Height	**OVH**	118.5	INCHES
Driver CG	**DCG**	70.9	INCHES
50" AXLE SPACING (BOGIE WHEELBASE)	**BS**	50.0	INCHES

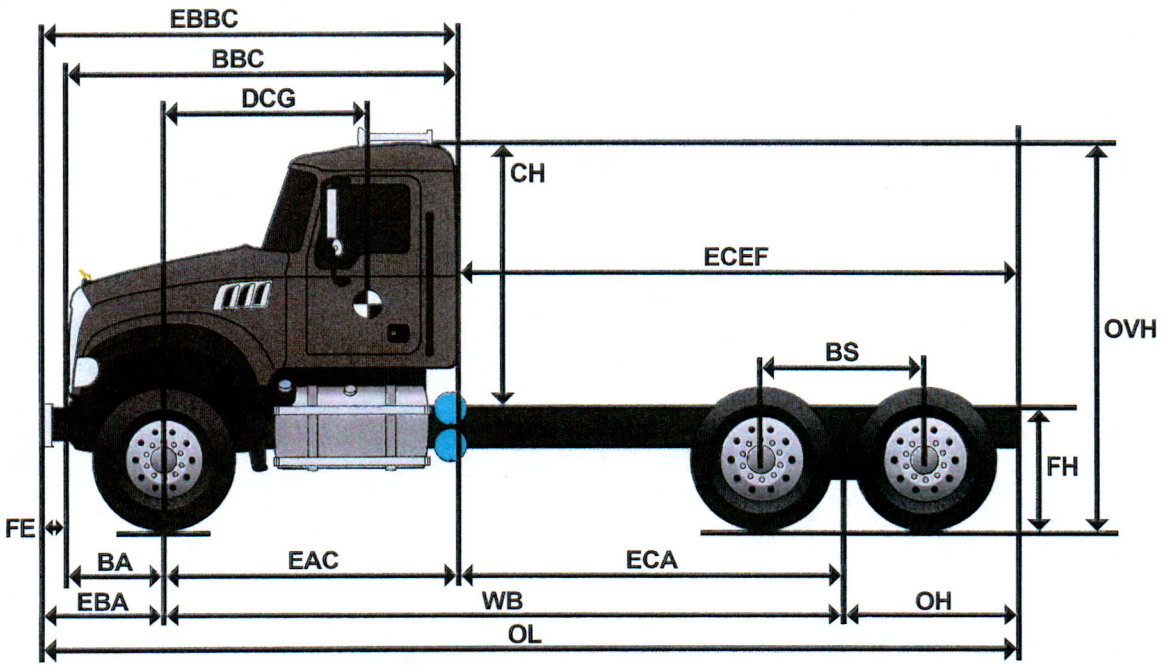

VEHICLE SPECIFICATION/CALCULATED PERFORMANCE SUMMARY				
Description	Sales Code	Dwg Ref	Left Value(in)	Right Value(in)
Wheelbase	N/A	WB	230.1	230.1
Available Rail Space Right	N/A	ARSR	N/A	98.7
Available Rail Space Left	N/A	ARSL	81.6	N/A
Eff. Front Axle to Back of Cab	N/A	REF	87.5	87.5
Front Axle To Fender	CDX23X	N/A	35.4	35.4
Cleartech One Unit	DPF04F	N/A	0.0	50.0
Battery Box	393AA2	N/A	15.0	0.0
66 GALLON (250 L) 22" ALUMINUM, SLEEVED D-SHAPED / W/O RH FUEL TANK	288AF2 / 290AA1	N/A	44.6	0.0
Ad-Blue Tank	DF10O1	N/A	7.5	0.0
Drive Tire Radius	9016D1	N/A	21.1	21.1

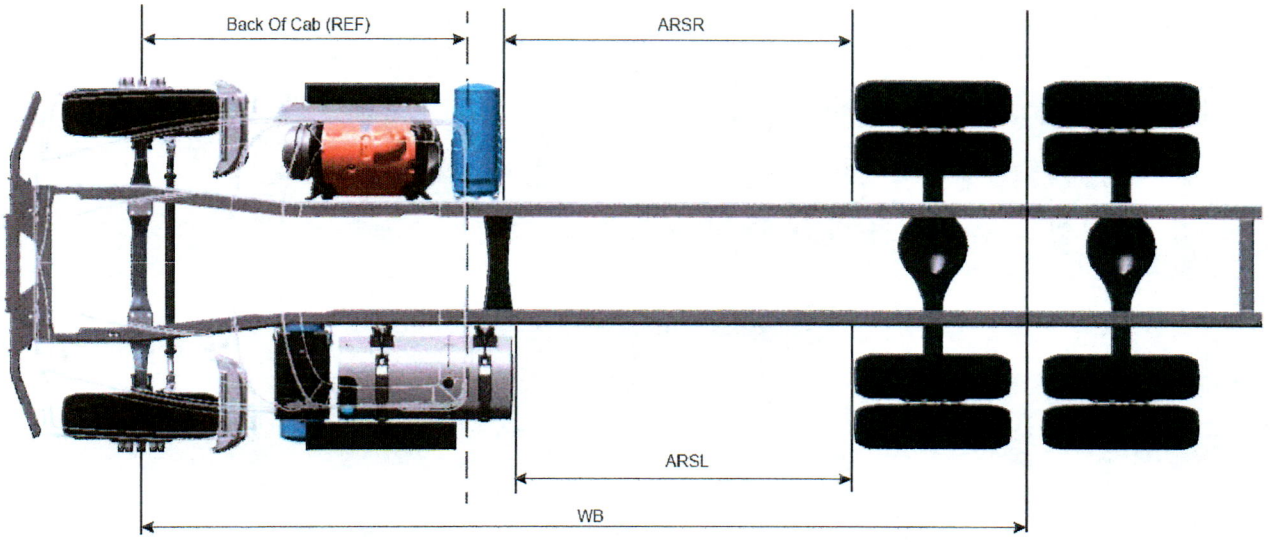

Top View image is intended for illustration purposes only and is not presented to scale. Wheelbase, Axle Spacing and After frame are not shown as specified, but are a representation. Customer Adaptation (CA) options and relocated components are not represented in these images. Most CA options impact the variation of the image, thus an image may not populate. Calculations are approximate to a tolerance of ± 4 inches due to component mounting variation. Certain chassis component options are NOT represented in the Top View image, such as, but not exclusive to, Front Frame Extensions, Fuel Water Separators, Air Dryers, PTOs, Fifth Wheels, Chassis Fairings, Toolboxes, Trailer Connections. For further information on these items and their respective locations on your specification, please refer to the data sheets associated with those items in the configurator.

VEHICLE SPECIFICATION/CALCULATED PERFORMANCE SUMMARY					
			Rear		
Description	Sales Code	Dwg Ref	Unladen	Laden	UOM
Tire Radius	9016D1	**A**	21.1	19.9	INCHES
Suspension Height	1860J6	**B**	11.7	8.7	INCHES
Frame Depth	YBXGAX	**C**	11.8	11.8	INCHES
Total Height	N/A	**E**	44.6	40.4	INCHES

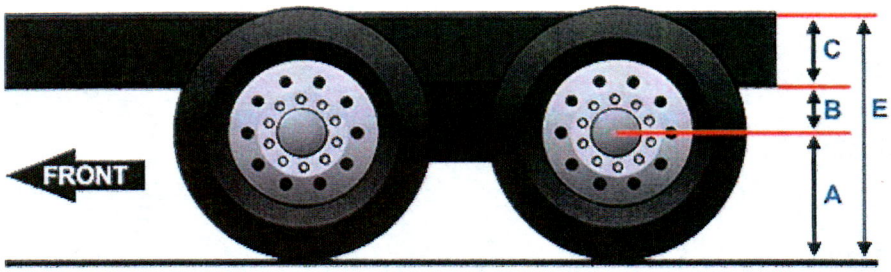

VEHICLE SPECIFICATION/CALCULATED PERFORMANCE SUMMARY			
Description	Dwg Ref	Length	UOM
SAE Turning Radius	A*	36.1	FEET
Adjusted Turning Radius	A	40.3	FEET
Curb-to-Curb Diameter	B	81.9	FEET
Wall-to-Wall Diameter	C	88.2	FEET

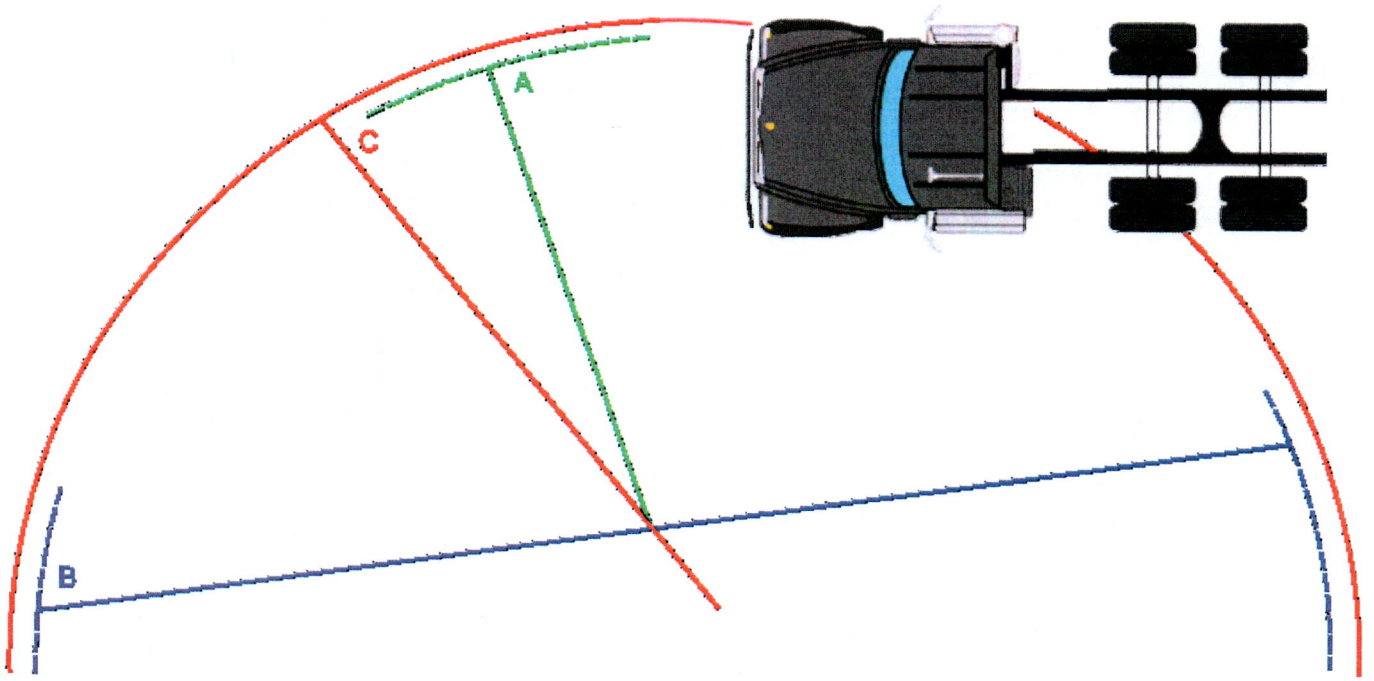

Tests have shown that the true location of the turning center is further to the rear than midway between drive axle sets (where applicable)

The actual location of the turning center depends on:

- Whether the drive tire equipment is single or dual.
- The overall load distribution for the vehicle (front/rear, between drive axles) in a loaded condition
- Manufacturing tolerances within the steering components

Inputs Required	DWGRef	Inputs	UOM
Driver(s) & Equipment Weight		201	LB
Total Body Length	TL	16.4	FEET
Body Tare Weight		3501	LB
Front of Body to Body CG	BODY CG	96.0	INCHES
Additional Clearance from Back of Exhaust to Front of Body	BC	6.0	INCHES

VEHICLE SPECIFICATION SUMMARY				
Description	Description	Dwg Ref	Length	UOM
Bumper to Front Axle	N/A	BA	29.0	INCHES
Wheelbase	N/A	WB	230.1	INCHES
Rear Overhang	N/A	OH	57.5	INCHES
Bumper to Back of Cab	N/A	BBC	116.5	INCHES
BOC Exhaust Space	130AD7	N/A	0.0	INCHES
Driver CG from Front Axle	N/A	DCG	70.9	INCHES

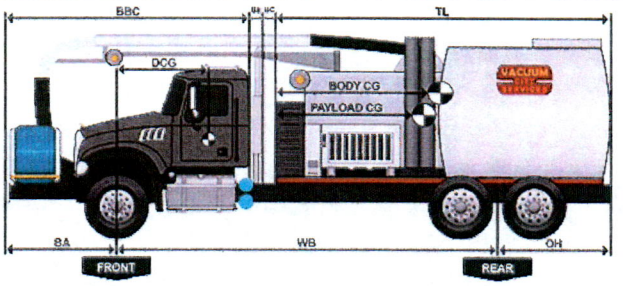

CALCULATED PERFORMANCE SUMMARY				
Tare Weights	Front Axle	Rear Axle (s)	Total	UOM
Chassis	9518	8347	17865	LB
Driver(s) & Equipment Weight	139	62	201	LB
Fuel	309	143	452	LB
Body/Trailer	617	2884	3501	LB
Total Tare	10582	11436	22017	LB
Payloads				
First Body Payload	7723	36101	43824	LB
Total - Lift Axles Down	18304	47537	65840	LB
GAWR	19840	46001	65840	LB

VEHICLE SPECIFICATION/CALCULATED PERFORMANCE SUMMARY				
Sub-Category	Sales Code	Sales Code Description	Value	UOM
Front Axle	240AA3	20000# (9100 KG) MACK FXL20 STRAIGHT SPINDLE/UNITIZED BEARINGS	20000	LB
Front Suspension	244AB4	MACK TAPERLEAF 20000# (9100 KG) GROUND LOAD RATING, EQUAL BIAS	20000	LB
Front Tires	9006S0	385/65R22.5 L CONTINENTAL HAC 3 (19840 lbs)	19840	LB
Front Wheels	5312W1	22.5x12.25 ALCOA 82462x HIGH POLISHED ALUMINUM, 5.81" OFFSET, 10 HAND HOLE	24601	LB
		Front GAWR	19840	LB
Rear Axle	2680D8	46000# (20900kg) MACK S460R FABRICATED STEEL HOUSING	46001	LB
Rear Suspension	1860J6	SS46 MACK CAMELBACK MULTILEAF 46,000 lb, STANDARD DUTY	46001	LB
Rear Tires	9016D1	11R22.5 H CONTINENTAL HDC 3 (24020 lbs)	48041	LB
Rear Wheels	34608Q	22.5x8.25 ALCOA 88067x HIGH POLISHED ALUMINUM, 6.60" OFFSET, 10 HAND HOLE	59200	LB
		Rear GAWR	46001	LB
		Truck GVWR	65840	LB
		Gross Combination Weight Rating	0	LB
		Tax Value GVWR (USA FET Only)	66000	LB