Fourth Amendment to the Community Development Block Grant – Disaster Recovery (CDBG-DR) Developer Agreement
Between
The City of Joplin and
Joplin Bungalows, LLC

This Fourth Amendment to the Community Development Block Grant – Disaster Recovery (CDBG-DR) Developer Agreement between the City of Joplin and the Joplin Bungalows, LLC executed on April ____, 2018 is made and entered into as of the ____ day of _____, 2018.

RECITALS:

I. SCOPE OF SERVICE

A. Developer Responsibilities

4. Developer's expenditures for program delivery will be limited as follows, unless changes to the limits are agreed to in writing by the Grantee and Developer for a particular property:

a. Minimum number of units to be developed and operated under the program: Twenty (20) units.

b. Minimum number of units to be occupied by low-income tenants: Eleven (11) units.

c. Contribute to the budget no less than $100,000 to be used for the purchase of land.

d. Contribute to the budget no less than $250,000 to be used for the construction of a community/safe room.

e. Contribute to the budget no less than $120,000 to be used for the purchase of furniture, fixtures, and equipment.

5. Project Compliance Requirements: Developer agrees to adhere and comply to all CDBG-DR project compliance requirements, including yet not limited to the following:

c. The Developer hereby agrees that the Property shall be used solely as an affordable housing complex and shall contain no less than eleven (11) affordable housing units at any time prior to the expiration of the twenty (20) year period following the completion date (the "Affordability Period"). The Developer has obtained the express written consent of the City to such reduction. In addition to the foregoing, the Developer shall,

at all times during the Affordability Period, maintain compliance with the requirements described in Section II Administrative Requirements.

6. Levels of Accomplishment - Performance Goals and Timelines

a. The Developer shall complete the activities required under this agreement in accordance with the following timeframes and performance goals associated with each of the activities:

Activity	Performance Goal	Timeframe for Completion of Performance Goal
LMI Compliance	At minimum 51% of the 20 units must be occupied by LMI individuals	Upon 95% occupancy 51% of the 20 units will be occupied by LMI individuals
Senior Availability	At minimum 11 of 20 units will be made available to seniors.	Upon 95% occupancy 11 of 20 units will be occupied by seniors

II. ADMINISTRATIVE REQUIREMENTS

D. Procurement

4. Performance, Labor, and Materials Payment Bond

The Developer shall require the contractor to furnish a Performance Bond and a Labor and Materials Payment Bond with surety approved by the City and on the forms approved by the City, each bond shall be in the amount of the contract value executed between Developer and their contractor in the amount not to exceed $2,947,158.00conditioned upon the full and faithful performance of all major terms and conditions of the contract and payment of al labor and material suppliers. It is further mutually agreed between the parties hereto that if any time after the execution of this agreement and the surety bond(s) hereto attached for its faithful performance and payment of labor and material suppliers, the City shall deem the surety or sureties upon such bond(s) to be unsatisfactory, or if, for any reason, such bond(s) ceases to be adequate to cover the performance of the work, the contractor shall, at its expense, within five (5) days after the receipt of notice from the City to do so, furnish an additional bond or bonds, in such form and amount, and with such surety or sureties as shall be satisfactory to the City. In such event no further payment to the Developer shall be deemed to be due under this contract until such new or additional security for the faithful performance of the work and the payment of the labor and material suppliers shall be furnished in a manner and form satisfactory to the City. The corporate surety on any performance or payment bond must be licensed by the State of Missouri and if the required bond exceeds $25,000 must be listed in United States Treasury Circular 570.

IN WITNESS WHEREOF, the parties have executed this contract as to the date written above.

City of Joplin, Missouri

_____

Troy Bolander
Planning, Development, and
Neighborhood Services

_____
Date

Joplin Bungalows, LLC

_____

John Joines
Manager

_____
Date

Exhibit A Joplin Bungalows Site Plan



1 SITE PLAN
SCALE: 1" = 20'-0"

KEYNOTE LEGEND

10.55 (2 TOTAL) FRONT-LOADING, U.S.P.S. APPROVED MAILBOX CLUSTER EQUAL TO MODEL #3316BRZ-U BY SALSBURY INDUSTRIES (WWW.MAILBOXES.COM). REFER TO MANUFACTURER'S INSTALLATION INSTRUCTIONS FOR MOUNTING - MOUNT ON 6'-0"x1'-10" CONCRETE PAD SIMILAR TO SIDEWALK DETAIL - SEE CIVIL. FINISH TO BE SELECTED FROM MANUFACTURER'S FULL COLOR RANGE. MASTER LOCK TO BE FURNISHED BY POST OFFICE. CONTRACTOR TO COORDINATE INSTALLATION WITH LOCAL POSTMASTER.

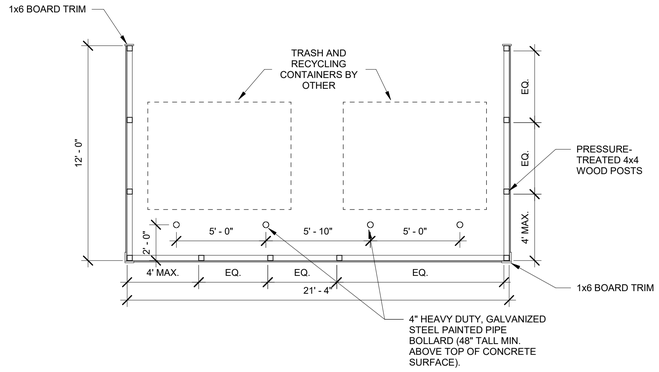

2 TRASH ENCLOSURE PLAN
SCALE: 1/4" = 1'-0"

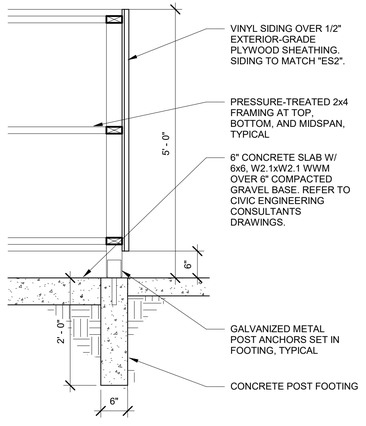

3 TRASH ENCLOSURE SECTION
SCALE: 3/4" = 1'-0"

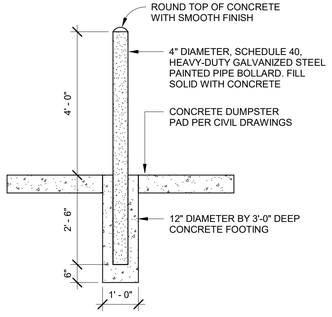

4 BOLLARD DETAIL
SCALE: 1/2" = 1'-0"

VECINO DESIGN
305 W. Commercial St. Springfield MO. 65803
417-720-1577 | www.vecinogroup.com

C. of A. S/N: A-2018000605

CONSULTANTS

SITE/CIVIL/LANDSCAPE
Small Arrow Engineering, LLC
516 S. Main St.
Joplin, MO 64801
417-624-2333
Contact: tbuniap@smallarrow.com

MEP ENGINEER
Vecino Design
305 W. Commercial St.
Springfield, MO 65803
417-720-1577
Contact: steve@vecinogroup.com

STRUCTURAL ENGINEER
Vecino Design
305 W. Commercial St.
Springfield, MO 65803
417-720-1577
Contact: walter@vecinogroup.com

INTERIOR DESIGN
Vecino Design
305 W. Commercial St.
Springfield, MO 65803
417-720-1577
Contact: cheyenne@vecinogroup.com

Joplin Bungalows

2617 McCOY AVE, JOPLIN, MISSOURI, 64804

REV.	DESCRIPTION	DATE
1	ADDENDUM 1	5/21/18
2	ADDENDUM 2	9/12/18
3	ADDENDUM 3	10/22/18

This drawing and the details on it are the sole property of the Architect and may be used for this specific project only. It shall not be loaned, copied, or reproduced in whole or in part, or for any other purpose or project without the written consent of the Architect.

STATE OF MISSOURI
J. CHRISTOPHER BALL
NUMBER A-7720
REGISTERED ARCHITECT

J. CHRISTOPHER BALL
LICENSE NO. 007720

The Professional Architect's seal affixed to this sheet applies only to the material and items shown on this sheet. All drawings, instruments, or other documents not exhibiting this seal shall not be considered prepared by the Architect, and this Architect expressly disclaims any and all responsibility for such plans, drawings or documents not exhibiting this seal.

DATE: 8-8-18
PROJECT NUMBER: 17250
DRAWN BY: Author

COPYRIGHT: © 2018 VECINO DESIGN

ARCHITECTURAL
SITE PLAN

A100

Exhibit B Joplin Bungalows Proforma

NSP Multifamily Toolkit
Multifamily Property Underwriting Template
Detailed Sources and Uses Worksheet

Bold, Green Highlight Cells Denote USER INPUT
Bold, Yellow Highlight Cells Denote USER INPUT OVERRIDES
White Cells Denote CALCULATED RESULTS

Property: Joplin Bungalows — 20 Total units, including 0 non-revenue unit(s)

Line	PERMANENT Sources (do not list construction / bridge loan(s))	$ Amount	% of TOTAL	% of CATEGORY	$ Per Unit	ADDITIONAL COMMENTS
1	1st Mortgage Hard Debt	$ 156,502.00	3.4%	3.4%	$ 7,825	*Loan by bank TBD*
2	2nd Mortgage Hard Debt	$ -	0.0%	0.0%	$ -	
3	Tax Credit Equity	$ -	0.0%	0.0%	$ -	
4	NSP Funds	$ -	0.0%	0.0%	$ -	*See note below regarding NSP funding limits*
5	HOME Funds	$ -	0.0%	0.0%	$ -	
6	Deferred Developer Fee	$ -	0.0%	0.0%	$ -	*Deferral equals 0.00% of Total Developer Fee*
7	Owner/GP Cash	$ -	0.0%	0.0%	$ -	
8	CDBG-DR	$ 4,154,900.00	0.0%	89.8%	$ 207,745	
9	Joplin Bungalows/Vecino FFE Budget	$ 120,000.00	0.0%	2.6%	$ 6,000	*To Be Furnished by Vecino*
10	Vecino Deffered Developer Fee	$ 150,000.00	0.0%	3.2%	$ 7,500	*Deffered for use in Community Room/Shelter*
11	ESC Deferred Developer Fee	$ 43,498.00	0.0%	0.9%	$ 2,175	*Deffered for use in Community Room/Shelter*
12	Other Source 5 (Specify)	$ -	0.0%	0.0%	$ -	
13	Other Source 6 (Specify)	$ -	0.0%	0.0%	$ -	
14		$ 4,624,900.00	100%	100%	$ 231,245	
15						
16	Sources and Uses Balanced	$ -	0%			
17						
18						
19	The ratio of NSP Funds to total Sources may not exceed the ratio of NSP eligible units (i.e., <120% AMI) to total units.					
20						
21						EB = Eligible Basis
22						
23	USES	$ Amount	% of TOTAL	% of CATEGORY	$ Per Unit	EB? / ADDITIONAL COMMENTS
24	ACQUISITION COSTS					
25	Acquistion Land	$ 354,900.00	7.7%	100.0%	$ 17,745	N — *$100,000 from Bank TBD*
26	Acquistion Buildings	$ -	0.0%	0.0%	$ -	Y
27	Acquisition Other	$ -	0.0%	0.0%	$ -	Y
28	TOTAL ACQUISITION COSTS	$ 354,900.00	8%	100%	$ 17,745	
29						
30	CONSTRUCTION COSTS					
31	Hard Costs: Site Improvements	$ 210,250.00	4.5%	7.1%	$ 10,513	Y — *Temporary split of Site Improvements and Construction.*
32	Hard Costs: Construction	$ 2,219,458.53	48.0%	75.3%	$ 110,973	Y — *Waiting on true numbers*
33	Hard Costs: Contingency	$ 177,473.00	3.8%	6.0%	$ 8,874	Y — *Contingency equals 7.30% of Hard Costs*
34	Other Construction/Rehab Cost (Specify)	$ -	0.0%	0.0%	$ -	Y
35	Other Construction/Rehab Cost (Specify)	$ -	0.0%	0.0%	$ -	Y
36	Other Construction/Rehab Cost (Specify)	$ -	0.0%	0.0%	$ -	Y
37	Builders Profit (BP)	$ 145,741.45	3.2%	4.9%	$ 7,287	Y — *BP Equals 5.59% of Hard Costs (incl. contingency)*
38	General Requirements (GR)	$ 145,741.45	3.2%	4.9%	$ 7,287	Y — *GR Equals 5.59% of Hard Costs (incl. contingency)*
39	General Overhead (GO)	$ 48,493.58	1.0%	1.6%	$ 2,425	Y — *GO Equals 1.86% of Hard Costs (incl. contingency)*
40	Subtotal BP+GR+GO	$ 339,976.47	7.4%	11.5%	$ 16,999	*Contrator Loading Equals 13.04% of Hard Costs (incl. contingcy.)*
41	TOTAL CONSTRUCTION COSTS	$ 2,947,158.00	64%	100%	$ 147,358	
42	*Of the total of $2,947,158, $2,607,182 or 88% is directly attibutable to Hard Costs, while $339,976 is attributable to other costs and contractor loading.*					

NSP Multifamily Toolkit
Multifamily Property Underwriting Template
Detailed Sources and Uses Worksheet

Bold, Green Highlight Cells Denote USER INPUT
Bold, Yellow Highlight Cells Denote USER INPUT OVERRIDES
White Cells Denote CALCULATED RESULTS

Property: Joplin Bungalows — 20 Total units, including 0 non-revenue unit(s)

43	**TRANSACTION COSTS**							
44	Accounting Fees: Cost Certification Audit Fee	$ 35,000.00	0.8%	4.2%	$ 1,750	Y	
45	Accounting Fees: General	$ -	0.0%	0.0%	$ -	Y	
46	Application and Tax Credit Fees	$ -	0.0%	0.0%	$ -	Y	
47	Architect	$ 188,368.00	4.1%	22.7%	$ 9,418	Y	
48	Bond Issuance	$ -	0.0%	0.0%	$ -	Y	
49	Builders' Risk		0.0%	0.0%	$ -	Y	
50	Building Permit Fees & Local Fees	$ 31,146.00	0.7%	3.8%	$ 1,557	Y	
51	Construction Loan: 3rd Party Reports/Inspect	$ -	0.0%	0.0%	$ -	Y	
52	Construction Loan: Financing Fee	$ 16,000.00	0.3%	1.9%	$ 800	Y	*Legacy Bank Fee/2% LOC Amount*
53	Construction Loan: Interest During Construction	$ 40,000.00	0.9%	4.8%	$ 2,000	Y	*Interest Carrying Fee/Prime plus 75bps*
54	Construction Loan: Lender's Attorney Fee	$ -	0.0%	0.0%	$ -	Y	
55	Construction Loan: Origination Fee	$ -	0.0%	0.0%	$ -	Y	
56	Construction Period: Insurance	$ 40,000.00	0.9%	4.8%	$ 2,000	Y	
57	Construction Period: Taxes	$ -	0.0%	0.0%	$ -	Y	
58	Consulting Fees (not payable through dev fee)	$ -	0.0%	0.0%	$ -	Y	
59	Engineer	$ 80,729.00	1.7%	9.7%	$ 4,036	Y	
60	Environmental Study	$ -	0.0%	0.0%	$ -	Y	
61	Furniture, Fixtures and Equipment	$ 120,000.00	2.6%	14.5%	$ 6,000	Y	*Residential Unit and Community Room Furnishings, plus W/D*
62	Legal: Owner Attorney/Borrower (EB)	$ 55,000.00	1.2%	6.6%	$ 2,750	Y	
63	Legal: Owner Attorney/Borrower Legal (Not EB)	$ -	0.0%	0.0%	$ -	N	*These are legal fees which are not basis-eligible*
64	Market Study / Appraisal	$ -	0.0%	0.0%	$ -	Y	
65	Marketing and Leasing	$ 25,000.00	0.5%	3.0%	$ 1,250	Y	
66	Miscellaneous / Other (Basis Eligible)	$ 60,000.00	1.3%	7.2%	$ 3,000	Y	*Landscaping*
67	Miscellaneous / Other (NOT Basis Eligible)	$ -	0.0%	0.0%	$ -	N	*These are miscellaneous fees which are not basis-eligible*
68	Partnership Legal and Organizational	$ -	0.0%	0.0%	$ -	Y	
69	Permanent Loan: 3rd Party Reports	$ -	0.0%	0.0%	$ -	Y	
70	Permanent Loan: Financing Fee	$ -	0.0%	0.0%	$ -	Y	*Equals 0.00% of permanent loan amount*
71	Permanent Loan: Lender's Attorney Fee	$ -	0.0%	0.0%	$ -	Y	
72	Permanent Loan: Origination Fee	$ -	0.0%	0.0%	$ -	Y	*Equals 0.00% of permanent loan amount*
73	Survey	$ 23,100.00	0.5%	2.8%	$ 1,155	Y	
74	Title and Recording	$ 30,000.00	0.6%	3.6%	$ 1,500	Y	
75	**P&P Bond**	$ 35,290.00	0.8%	4.3%	$ 1,765	Y	
76	**Material Testing**	$ 10,000.00	0.2%	1.2%	$ 500	Y	
77	**Soft Cost Contingency**	$ 30,449.00	0.7%	3.7%	$ 1,522	Y	
78	**Interior Design**	$ 10,000.00	0.2%	1.2%	$ 500	Y	
79			0.0%	0.0%	$ -	Y	
80	**Other Transaction Cost 6 (Specify)**	$ -	0.0%	0.0%	$ -	Y	
81	**Other Transaction Cost 7 (Specify)**	$ -	0.0%	0.0%	$ -	Y	
82	**Other Transaction Cost 8 (Specify)**	$ -	0.0%	0.0%	$ -	Y	
83	**Other Transaction Cost 9 (Specify)**	$ -	0.0%	0.0%	$ -	Y	
84	**Other Transaction Cost 10 (Specify)**	$ -	0.0%	0.0%	$ -	Y	
85	**Other Transaction Cost 11 (Specify)**	$ -	0.0%	0.0%	$ -	Y	
86	**Other Transaction Cost 12 (Specify)**	$ -	0.0%	0.0%	$ -	Y	
87	**Other Transaction Cost 13 (Specify)**	$ -	0.0%	0.0%	$ -	Y	
88	**TOTAL TRANSACTION COSTS**	$ 830,082.00	18%	100%	$ 41,504		
89							
90	**ESCROW ACCOUNTS**						
91	Initial Deposit to Reserve for Replacements		0.0%	0.0%	$ -	N	
92	Property Tax Escrow	$ -	0.0%	0.0%	$ -	N	
93	Hazard Insurance Escrow	$ -	0.0%	0.0%	$ -	N	
94	Debt Service Reserve	$ -	0.0%	0.0%	$ -	N	
95	Operating Reserve/Working Capital	$ 57,777.00	1.2%	100.0%	$ 2,889	N	*6 months debt + operating expenses*
96	Lease-Up Reserve	$ -	0.0%	0.0%	$ -	N	
97	**Other Escrow 1 (Specify)**	$ -	0.0%	0.0%	$ -	N	
98	**Other Escrow 2 (Specify)**	$ -	0.0%	0.0%	$ -	N	
99	**Other Escrow 3 (Specify)**	$ -	0.0%	0.0%	$ -	N	

NSP Multifamily Toolkit
Multifamily Property Underwriting Template
Detailed Sources and Uses Worksheet

Bold, Green Highlight Cells Denote USER INPUT
Bold, Yellow Highlight Cells Denote USER INPUT OVERRIDES
White Cells Denote CALCULATED RESULTS

Property: Joplin Bungalows — 20 Total units, including 0 non-revenue unit(s)

100	TOTAL ESCROW ACCOUNTS	$	57,777.00	1%	100%	$	2,889	
101								
102	GROSS DEVELOPER FEE							
103	Total Gross Developer Fee	$	434,983.00	9.4%	100.0%	$	21,749	Y	*Equals 9.41% of total uses excluding developer fee*
104	TOTAL GROSS DEVELOPER FEE	$	434,983.00	9%	100%	$	21,749		Joplin Bungalows will receive 10% and Vecino will receive 90%
105									
106	TOTAL USES	$	4,624,900.00	100%	100%	$	231,245		

Exhibit C Master Schedule

ID	Name	Start	Finish
1	Round I Projects	Mon 7/2/12	Mon 12/30/19
3	Subrecipient Projects	Mon 7/16/12	Mon 12/30/19
134	Joplin Affordable Senior Ho	Mon 6/1/15	Mon 12/30/19
135	Project Start	Mon 6/1/15	Mon 6/1/15
136	Environmental Assessme	Mon 12/19/16	Tue 3/20/18
147	Land Acquisiton	Wed 2/21/18	Mon 11/5/18
153	Developer Agreement	Sat 1/6/18	Thu 4/26/18
160	Design	Thu 4/26/18	Tue 10/30/18
173	Construction	Mon 11/5/18	Tue 10/29/19
175	Project Closeout	Wed 10/30/19	Mon 12/30/19

