Prepared for:
DARYL HAY
VIKING CIVES MIDWEST CITY
OF JOPLIN
PO BOX295
MORLEY, MO 63767
Phone: 573-262-3545

Prepared by:
Dean Spurlock
TAG TRUCK ENTERPRISES OF
MISSOURI, LLC
307 LYNUAL STREET
SIKESTON, MO 63801
Phone: 573-471-7100

QUOTATION

114SD CONVENTIONAL CHASSIS

SET FORWARD AXLE - TRUCK
CUM L9 350 HP @ 2000 RPM, 2200 GOV RPM, 1150 LB/FT @ 1400 RPM
ALLISON 3000 RDS AUTOMATIC TRANSMISSION WITH PTO PROVISION
MT-40-14X 40,000# R-SERIES TANDEM REAR AXLE
HENDRICKSON HAULMAAX @40,000# REAR SUSPENSION
DETROIT DA-F-18.0-5 18,000# FL1 71.0 KPI/3.74 DROP SINGLE FRONT AXLE
18,000# TAPERLEAF FRONT SUSPENSION
114 INCH BBC FLAT ROOF ALUMINUM CONVENTIONAL CAB
5625MM (221 INCH) WHEELBASE
7/16X3-9/16X11-1/8 INCH STEEL FRAME (11.11MMX282.6MM/0.437X11.13 INCH) 120KSI
1775MM (70 INCH) REAR FRAME OVERHANG
PARTIAL INNER FRAME REINFORCEMENT AT FRONT SUSPENSION
BODY COMPANY INSTALLED ADDITIONAL FRONT FRAME REINFORCEMENT FOR SNOW PLOW

			PER UNIT		TOTAL
VEHICLE PRICE	**TOTAL # OF UNITS (2)**	$	95,626.00	$	191,252.00
EXTENDED WARRANTY		$	4,269.00	$	8,538.00
VIKING-CIVES MIDWEST INSTALLED OPTIONS		$	96,418.87	$	192,837.74.00
CUSTOMER PRICE BEFORE TAX		**$**	***196,313.87***	**$**	***392,627.74***
TAXES AND FEES					
TAXES AND FEES		$	0	$	0
OTHER CHARGES		$	0	$	0
		$	(0)	$	(0)
BALANCE DUE	**(LOCAL CURRENCY)**	**$**	**196,313.87**	**$**	**392,627.74**

COMMENTS: Projected delivery on ___ / ___ / ___ provided the order is received before ___ / ___ / ___.
APPROVAL: Please indicate your acceptance of this quotation by signing below: Customer:
X_____ Date: ___ / ___ / ___.

Daimler Truck Financial
Financing that works for you.

See your local dealer for a competitive quote from Daimler Truck Financial, or contact us at Information@dtfoffers.com.
Daimler Truck Financial offers a variety of finance, lease and insurance solutions to fit your business needs. For more information about our products and services, visit our website at www.daimler-truckfinancial.com.

Stark Bid # IFB605CO1800696

Prepared for:
DARYL HAY
VIKING CIVES MIDWEST CITY
OF JOPLIN
PO BOX295
MORLEY, MO 63767
Phone: 573-262-3545

Prepared by:
Dean Spurlock
TAG TRUCK ENTERPRISES OF
MISSOURI, LLC
307 LYNUAL STREET
SIKESTON, MO 63801
Phone: 573-471-7100

DIMENSIONS

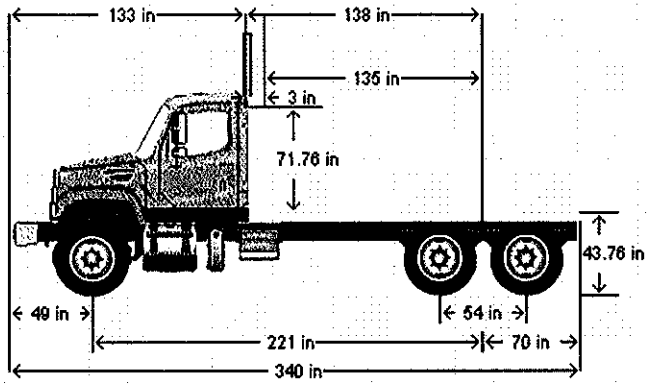

VEHICLE SPECIFICATIONS SUMMARY - DIMENSIONS

Model 114SD
Wheelbase (545) ..... 5625MM (221 INCH) WHEELBASE
Rear Frame Overhang (552) ..... 1775MM (70 INCH) REAR FRAME OVERHANG
Fifth Wheel (578) ..... NO FIFTH WHEEL
- Mounting Location (577) ..... NO FIFTH WHEEL LOCATION
- Maximum Forward Position (in) 0
- Maximum Rearward Position (in) 0
- Amount of Slide Travel (in) 0
- Slide Increment (in) 0
- Desired Slide Position (in) 0.0

Cab Size (829) ..... 114 INCH BBC FLAT ROOF ALUMINUM CONVENTIONAL CAB
Sleeper (682) ..... NO SLEEPER BOX/SLEEPERCAB
Exhaust System (016) ..... RH OUTBOARD UNDER STEP MOUNTED HORIZONTAL AFTERTREATMENT SYSTEM ASSEMBLY WITH RH B-PILLAR MOUNTED VERTICAL TAILPIPE

TABLE SUMMARY - DIMENSIONS

Prepared for:
DARYL HAY
VIKING CIVES MIDWEST CITY
OF JOPLIN
PO BOX295
MORLEY, MO 63767
Phone: 573-262-3545

Prepared by:
Dean Spurlock
TAG TRUCK ENTERPRISES OF
MISSOURI, LLC
307 LYNUAL STREET
SIKESTON, MO 63801
Phone: 573-471-7100

Dimensions	Inches
Bumper to Back of Cab (BBC)	132.9
Bumper to Centerline of Front Axle (BA)	49.4
Min. Cab to Body Clearance (CB)	3.0
Back of Cab to Centerline of Rear Axle(s) (CA)	137.5
Effective Back of Cab to Centerline of Rear Axle(s) (Effective CA)	134.5
Back of Cab Protrusions (Exhaust/Intake) (CP)	0.0
Back of Cab Protrusions (Side Extenders/Trim Tab) (CP)	0.0
Back of Cab Protrusions (CNG Tank)	0.0
Back of Cab Clearance (CL)	3.0
Back of Cab to End of Frame	207.5
Cab Height (CH)	71.8
Wheelbase (WB)	221.0
Frame Overhang (OH)	70.0
Overall Length (OAL)	340.4
Rear Axle Spacing	54.0
Unladen Frame Height at Centerline of Rear Axle	43.8

Performance calculations are estimates only. If performance calculations are critical, please contact Customer Application Engineering.

Prepared for:
DARYL HAY
VIKING CIVES MIDWEST CITY
OF JOPLIN
PO BOX295
MORLEY, MO 63767
Phone: 573-262-3545

Prepared by:
Dean Spurlock
TAG TRUCK ENTERPRISES OF
MISSOURI, LLC
307 LYNUAL STREET
SIKESTON, MO 63801
Phone: 573-471-7100

G V W R

VEHICLE SPECIFICATIONS SUMMARY - GVWR

Model	114SD
Cab Size (829)	114 INCH BBC FLAT ROOF ALUMINUM CONVENTIONAL CAB
Expected Front Axle(s) Load (lbs)	18000.0
Expected Pusher Axle(s) Load (lbs)	0.0
Expected Rear Axle(s) Load (lbs)	40000.0
Expected Tag Axle(s) Load (lbs)	0.0
Expected GVW (lbs)	58000
Expected GCW (lbs)	80000.0
Front Axle (400)	DETROIT DA-F-18.0-5 18,000# FL1 71.0 KPI/3.74 DROP SINGLE FRONT AXLE
Front Suspension (620)	18,000# TAPERLEAF FRONT SUSPENSION
Front Hubs (418)	CONMET PRESET PLUS PREMIUM IRON FRONT HUBS
Front Disc Wheels (502)	ACCURIDE 29039 22.5X9.00 10-HUB PILOT 5.25 INSET 5-HAND STEEL DISC FRONT WHEELS
Front Tires (093)	CONTINENTAL CITY SERVICE HA3 315/80R22.5 20 PLY RADIAL FRONT TIRES
Front Brakes (402)	MERITOR 16.5X6 Q+ CAST SPIDER CAM FRONT BRAKES, DOUBLE ANCHOR, FABRICATED SHOES
Steering Gear (536)	TRW THP-60 POWER STEERING WITH RCH45 AUXILIARY GEAR
Rear Axle (420)	MT-40-14X 40,000# R-SERIES TANDEM REAR AXLE
Rear Suspension (622)	HENDRICKSON HAULMAAX @40,000# REAR SUSPENSION
Rear Hubs (450)	CONMET PRESET PLUS PREMIUM IRON REAR HUBS
Rear Disc Wheels (505)	ACCURIDE 28828 22.5X8.25 10-HUB PILOT 2-HAND HD STEEL DISC REAR WHEELS
Rear Tires (094)	CONTINENTAL HDR2 11R22.5 14 PLY RADIAL REAR TIRES
Rear Brakes (423)	MERITOR 16.5X7 Q+ CAST SPIDER CAM REAR BRAKES, DOUBLE ANCHOR, FABRICATED SHOES
Pusher / Tag Axle (443)	NO PUSHER OR TAG AXLE
Pusher / Tag Suspension (626)	NO PUSHER OR TAG SUSPENSION
Pusher / Tag Hubs (449)	NO PUSHER OR TAG HUBS
Pusher/Tag Disc Wheels (509)	NO PUSHER/TAG DISC WHEELS
Pusher / Tag Tires (095)	NO PUSHER/TAG TIRES
Pusher / Tag Brakes (456)	NO PUSHER/TAG BRAKES

TABLE SUMMARY - GVWR

Prepared for:
DARYL HAY
VIKING CIVES MIDWEST CITY
OF JOPLIN
PO BOX295
MORLEY, MO 63767
Phone: 573-262-3545

Prepared by:
Dean Spurlock
TAG TRUCK ENTERPRISES OF
MISSOURI, LLC
307 LYNUAL STREET
SIKESTON, MO 63801
Phone: 573-471-7100

	Front	Rear 1	Rear 2
Axle Component Weight Ratings			
Axles	18000	20000	20000
Suspension	18000	20000	20000
Hubs	23000	26000	26000
Brakes	20000	21000	21000
Wheels	20000	32000	32000
Tires	20000	23360	23360
Power Steering	22000	N/A	N/A
GAWR (per axle)	18000	20000	20000
GAWR (per axle system)	18000		40000
Expected Load (per axle system)	18000		40000
Vehicle GVWR Summary			
Calculated GVWR	58000		
Expected GVWR	58000		
All weights displayed in pounds			

Performance calculations are estimates only. If performance calculations are critical, please contact Customer Application Engineering.