Fire and Rescue Apparatus

One (1) Year Material and Workmanship
Basic Apparatus
Limited Warranty

1. LIMITED WARRANTY

Subject to the limitations and exclusions set forth below, Pierce Manufacturing provides the following warranty to the Buyer:

Coverage:	**Portions of the apparatus manufactured by Pierce shall be free from defects in material and workmanship**
Warranty Begins:	**The date the apparatus is placed in service, or 60 days from the original buyer invoice date, whichever comes first.**
Warranty Period Ends After:	**Twelve (12) months.**
Conditions and Exclusions: **See Also Paragraphs 2 thru 4**	**No specific exclusions apply**

This limited warranty shall apply only if the product is properly maintained in accordance with Pierce's maintenance instructions and manuals and is used in service which is normal to the particular model. Normal service means service which does not subject the product to stresses or impacts greater than normally result from careful use. If the Buyer discovers a defect or nonconformity, it must notify Pierce in writing within thirty (30) days after the date of discovery, but in any event prior to the expiration of the warranty period. THIS LIMITED WARRANTY MAY NOT BE ASSIGNED OR OTHERWISE TRANSFERRED BY THE BUYER TO ANY SUBSEQUENT USER OR PURCHASER OR TO ANY OTHER PERSON OR ENTITY.

Notwithstanding anything to the contrary herein, Pierce makes no warranty whatsoever as to:

(a) any integral parts, components, attachments or trade accessories of or to the product that are not manufactured by Pierce, including but not limited to engines, transmissions, drivelines, axles, water pumps and generators; with respect to all such parts, components, attachments and accessories, Pierce shall assign to Buyer the applicable warranties, if any, made by the respective manufacturers thereof;

(b) any vehicle, chassis, or component, part, attachment or accessory damaged by misuse, neglect, fire, exposure to severe environmental or chemical conditions, acidic environment, improper maintenance, accident, crash, or force majeure such as natural disaster, lightning, earthquake, windstorm, hail, flood, war or riot;

(c) any vehicle, chassis or component, part, attachment or accessory that has been repaired, altered or assembled in any way by any person or entity other than Pierce which, in the sole judgment of Pierce, adversely affects the performance, stability or purpose for which it was manufactured; or

(d) products or parts which may in the ordinary course wear out and have to be replaced during the warranty period, including, but not limited to, tires, fluids, gaskets and light bulbs. Pierce assumes no responsibility for the assembly of its parts or subassemblies into finishing products or vehicles unless the assembly is performed by Pierce.

The original purchaser may void this warranty in part or in its entirety if the product is repaired or replaced (a) without prior written approval of the Pierce Customer Service Department; or (b) at a facility which has not been approved by Pierce as to technical capability. Any repairs, modifications, alterations or aftermarket parts added after manufacture without the authorization of Pierce may void this warranty.

2. DISCLAIMERS OF WARRANTIES

THE WARRANTY SET FORTH IN PARAGRAPH 1 IS THE SOLE AND EXCLUSIVE WARRANTY GIVEN BY PIERCE. PIERCE HEREBY DISCLAIMS AND EXCLUDES ALL OTHER WARRANTIES, WHETHER EXPRESS, IMPLIED OR STATUTORY, INCLUDING WITHOUT LIMITATION ANY WARRANTY OF MERCHANTABILITY, ANY WARRANTY OF FITNESS FOR A PARTICULAR PURPOSE, AND ANY WARRANTIES ARISING FROM COURSE OF DEALING OR USAGE OF TRADE.

3. BUYER'S EXCLUSIVE REMEDY.

If the product fails to conform to the warranty set forth in paragraph 1 during the warranty period, and such nonconformity is not due to misuse, neglect, accident or improper maintenance, Buyer must notify Pierce within the time period specified in paragraph 1, and shall make the product available for inspection by Pierce or its designated agent. At the request of Pierce, any allegedly defective product shall be returned to Pierce by Buyer for examination and/or repair. Buyer shall be responsible for the cost of such transportation, and for risk of loss of or damage to the product during transportation. Within a reasonable time, Pierce shall repair or replace (at Pierce's option and expense) any nonconforming or defective parts. Repair or replacement shall be made only by a facility approved in advance in writing by Pierce. THIS REMEDY SHALL BE THE EXCLUSIVE AND SOLE REMEDY FOR ANY BREACH OF WARRANTY.

4. EXCLUSION OF CONSEQUENTIAL AND INCIDENTAL DAMAGES.

Notwithstanding anything to the contrary herein or in any agreement between Pierce and Buyer, IN NO EVENT SHALL PIERCE BE LIABLE FOR ANY CONSEQUENTIAL, INCIDENTAL, SPECIAL, INDIRECT, OR PUNITIVE DAMAGES WHATSOEVER, WHETHER ARISING OUT OF BREACH OF CONTRACT, WARRANTY, TORT (INCLUDING NEGLIGENCE AND STRICT LIABILITY) OR OTHER THEORY OF LAW OR EQUITY, WITH RESPECT TO VEHICLES OR OTHER PRODUCTS SOLD BY PIERCE, OR THEIR OPERATION OR FAILURE TO OPERATE, OR ANY DEFECTS THEREIN, OR ANY UNDERTAKINGS, ACTS OR OMISSIONS RELATED THERETO, REGARDLESS OF WHETHER PIERCE HAS BEEN INFORMED OF THE POSSIBILITY OF ANY SUCH DAMAGES. Without limiting the generality of the foregoing, Pierce specifically disclaims any liability for property or personal injury damages, penalties, damages for lost profits or revenues, loss of vehicles or products or any associated equipment, cost of substitute vehicles or products, down-time, delay damages, any other types of economic loss, or for any claims by any third party for any such damages.

Note: Any Surety Bond, if a part of the sale of the vehicle as to which this limited warranty is provided, applies only to this Pierce Basic One Year Limited Warranty for such vehicle, and not to other warranties made by Pierce in a separate document (if any) or to the warranties (if any) made by any manufacturer (other than Pierce) of any part, component, attachment or accessory that is incorporated into or attached to the vehicle.

Cummins Warranty

Worldwide
Fire Apparatus/Crash Trucks

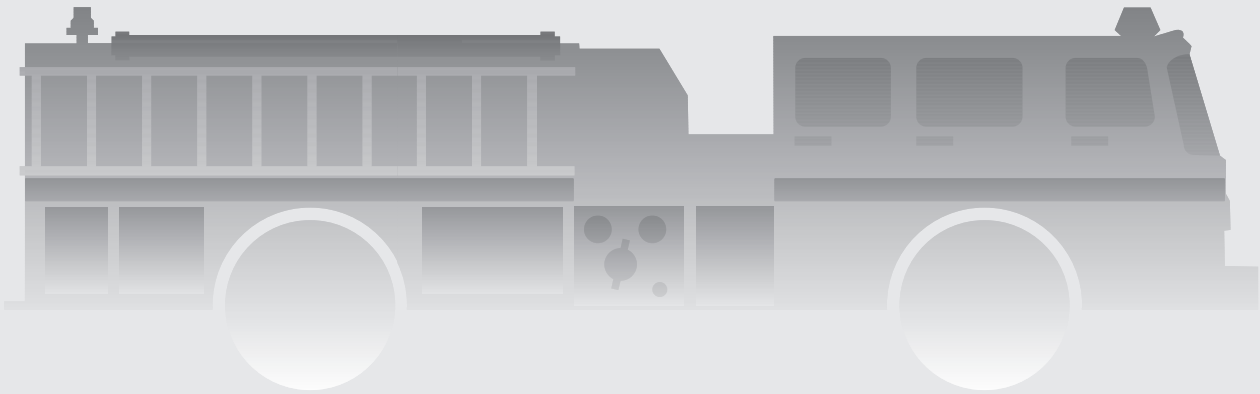

Coverage

Products Warranted

This Warranty applies to new diesel Engines sold by Cummins and delivered to the first user on or after April 1, 2007, that are used in fire apparatus truck and crash truck* applications Worldwide.

Base Engine Warranty

The Base Engine Warranty covers any failures of the Engine which result, under normal use and service, from a defect in material or factory workmanship (Warrantable Failure). This Coverage begins with the sale of the Engine by Cummins and ends five years or 100,000 miles (160,935 kilometers), whichever occurs first, after the date of delivery of the Engine to the first user.

Engine aftertreatment components included in the Cummins Critical Parts List (CPL) and marked with a Cummins part number are covered under Base Engine Warranty.

Additional Coverage is outlined in the Emission Warranty section.

These Warranties are made to all Owners in the chain of distribution and Coverage continues to all subsequent Owners until the end of the periods of Coverage.

Cummins Responsibilities

Cummins will pay for all parts and labor needed to repair the damage to the Engine resulting from a Warrantable Failure.

Cummins will pay for the lubricating oil, antifreeze, filter elements, belts, hoses and other maintenance items that are not reusable due to the Warrantable Failure.

Cummins will pay for reasonable labor costs for Engine removal and reinstallation when necessary to repair a Warrantable Failure.

Cummins will pay reasonable costs for towing a vehicle disabled by a Warrantable Failure to the nearest authorized repair location. In lieu of the towing expense, Cummins will pay reasonable costs for mechanics to travel to and from the location of the vehicle, including meals, mileage and lodging when the repair is performed at the site of the failure.

Owner Responsibilities

Owner is responsible for the operation and maintenance of the Engine as specified in Cummins Operation and Maintenance Manuals. Owner is also responsible for providing proof that all recommended maintenance has been performed.

Before the expiration of the applicable Warranty, Owner must notify a Cummins distributor, authorized dealer or other repair location approved by Cummins of any Warrantable Failure and make the Engine available for repair by such facility. Except for Engines disabled by a Warrantable Failure, Owner must also deliver the Engine to the repair facility.

Service locations are listed on the Cummins Worldwide Service Locator at cummins.com.

Owner is responsible for the cost of lubricating oil, antifreeze, filter elements and other maintenance items provided during Warranty repairs unless such items are not reusable due to the Warrantable Failure.

Owner is responsible for communication expenses, meals, lodging and similar costs incurred as a result of a Warrantable Failure.

Owner is responsible for non-Engine repairs and for ‘‘downtime’’ expenses, cargo damage, fines, all applicable taxes, all business costs and other losses resulting from a Warrantable Failure.

Owner is responsible for a $100 (U.S. Dollars) deductible per each service visit under this plan in the 3rd, 4th and 5th years of Base Engine Warranty. The deductible will not be charged during the first 2 years of the Base Engine Warranty.

Limitations

Cummins is not responsible for failures or damage resulting from what Cummins determines to be abuse or neglect, including, but not limited to: operation without adequate coolants or lubricants; overfueling; overspeeding; lack of maintenance of lubricating, cooling or intake systems; improper storage, starting, warm-up, run-in or shutdown practices; unauthorized modifications of the Engine.

Any unauthorized modifications to the aftertreatment could negatively effect emissions certification and void Warranty.

Cummins is also not responsible for failures caused by incorrect oil, fuel or diesel exhaust fluid or by water, dirt or other contaminants in the fuel, oil or diesel

exhaust fluid.

This Warranty does not apply to accessories supplied by Cummins which bear the name of another company. Such non-warranted accessories include, but are not limited to: alternators, starters, fans, air conditioning compressors, clutches, filters, transmissions, torque converters, vacuum pumps, power steering pumps, fan drives and air compressors. Cummins branded alternators and starters are covered for the first two years from the date of delivery of the Engine to the first user, or the expiration of the Base Engine Warranty, whichever occurs first.

Failures resulting in excessive oil consumption are not covered beyond the duration of the Coverage or 100,000 miles (160,935 kilometers) or 7,000 hours from the date of delivery of the Engine to the first user, whichever of the three occurs first. Before a claim for excessive oil consumption will be considered, Owner must submit adequate documentation to show that consumption exceeds Cummins published standards.

Failures of belts and hoses supplied by Cummins are not covered beyond the first year from the date of delivery of the Engine to the first user or the duration of the Warranty, whichever occurs first.

Parts used to repair a Warrantable Failure may be new Cummins parts, Cummins approved rebuilt parts or repaired parts. Cummins is not responsible for failures resulting from the use of parts not approved by Cummins.

A new Cummins or Cummins approved rebuilt part used to repair a Warrantable Failure assumes the identity of the part it replaced and is entitled to the remaining Coverage hereunder.

Cummins Inc. reserves the right to interrogate Electronic Control Module (ECM) data for purposes of failure analysis.

CUMMINS DOES NOT COVER WEAR OR WEAROUT OF COVERED PARTS.

CUMMINS IS NOT RESPONSIBLE FOR INCIDENTAL OR CONSEQUENTIAL DAMAGES.

THIS WARRANTY AND THE EMISSION WARRANTY SET FORTH HEREINAFTER ARE THE SOLE WARRANTIES MADE BY CUMMINS IN REGARD TO THESE ENGINES. CUMMINS MAKES NO OTHER WARRANTIES, EXPRESS OR IMPLIED, OR OF MERCHANTABILITY OR FITNESS FOR A PARTICULAR PURPOSE.

This Warranty gives you specific legal rights, and you may also have other rights which vary from state to state.

Emission Warranty

Products Warranted

This Emission Warranty applies to new Engines marketed by Cummins that are used in the United States** in vehicles designed for transporting persons or property on a street or highway. This Warranty applies to Engines delivered to the first user on or after September 1, 1992.

Coverage

Cummins warrants to the first user and each subsequent purchaser that the Engine is designed, built and equipped so as to conform at the time of sale by Cummins with all U.S. federal emission regulations applicable at the time of manufacture and that it is free from defects in material or factory workmanship which would cause it not to meet these regulations within the longer of the following periods: (A) Five years or 100,000 miles (160,935 kilometers) of operation, whichever occurs first, as measured from the date of delivery of the Engine to the first user or (B) The Base Engine Warranty.

If the vehicle in which the Engine is installed is registered in the state of California, a separate California Emission Warranty also applies.

Limitations

Failures, other than those resulting from defects in material or factory workmanship, are not covered by this Warranty.

Cummins is not responsible for failures or damage resulting from what Cummins determines to be abuse or neglect, including, but not limited to: operation without adequate coolants or lubricants; overfueling; overspeeding; lack of maintenance of lubricating, cooling or intake systems; improper storage, starting, warm-up, run-in or shutdown practices; unauthorized modifications of the Engine.

Any unauthorized modifications to the aftertreatment could negatively effect emissions certification and void Warranty.

Cummins is also not responsible for failures caused by incorrect oil, fuel or diesel exhaust fluid or by water, dirt or other contaminants in the fuel, oil or diesel exhaust fluid.

Cummins is not responsible for non-Engine repairs, ‘‘downtime’’ expenses, cargo damage, fines, all applicable taxes, all business costs or other losses resulting from a Warrantable Failure.

CUMMINS IS NOT RESPONSIBLE FOR INCIDENTAL OR CONSEQUENTIAL DAMAGES.

* Airport operated crash trucks and fire department operated trucks employed to respond to fires, hazardous material releases, rescue and other emergency-type situations.

** United States includes American Samoa, the Commonwealth of Northern Mariana Islands, Guam, Puerto Rico and the U.S. Virgin Islands.

Cummins Inc.
Box 3005
Columbus, IN 47202-3005
U.S.A.

Bulletin 3381161
Printed in U.S.A. Rev. 08/09
©2001 Cummins Inc.

R. H. SHEPPARD CO., INC.
101 Philadelphia St.
Hanover, PA 17331
Pierce Manufacturing Inc.
2600 American Drive
Appleton, WI 54912

LIMITED WARRANTY: The R. H. Sheppard Co. Inc., ("Sheppard") warrants all M110PKG1 and M110SAU1 steering gears manufactured and sold to Pierce Manufacturing Inc. ("Pierce") for application on Pierce TAK-4 equipped vehicles to be free from defects of workmanship and material under normal use and service for a period of thirty six months from the in service date of the vehicle to its original owner.

Vehicle applications where Sheppard product is used require an application approval before production build. If Pierce uses Sheppard product for any purpose or application which has not been approved by Sheppard in advance, including aftermarket devices (defined as a device added to the steering system directly or indirectly affecting the performance or operation of the Sheppard product in its approved application) not tested and approved by Sheppard this limited warranty SHALL NOT APPLY AND SHALL BE VOID. SHEPPARD MAKES NO OTHER WARRANTY, EITHER EXPRESS OR IMPLIED. SHEPPARD EXPRESSLY DISCLAIMS ANY WARRANTY OF MERCHANTABILITY OR FITNESS FOR ANY PARTICULAR USE OR PURPOSE WHICH EXTEND BEYOND THE DESCRIPTION ON THE FACE HEREOF.
SHEPPARD SHALL NOT BE LIABLE FOR ANY CONSEQUENTIAL, SPECIAL OR INDIRECT DAMAGES OR FOR LOSS OR DAMAGE DIRECTLY OR INDIRECTLY ARISING FROM THE USE OF A PRODUCT. Pierce expressly acknowledges its obligation to inform all users (customers) of the above disclaimer.

CONDITIONS: Claims under this Limited Warranty may only be made by Pierce. In no event shall Sheppard be held liable for warranty charges by unauthorized persons. No allowance will be made for repairs or alterations, unless made with the written consent of Sheppard. Authorized Pierce dealers shall be the only authorized repair facility for Sheppard products applied to Pierce vehicles. Any warrantable repair made under this Limited Warranty must be made on or before 36 months of the in-service date for the Product to which the claim relates. Sheppard shall not be liable for claims made after such date. Sheppard product fitted to Pierce vehicles that are repaired at a repair facility other than an authorized Pierce dealer within the warranty period will be considered for payment under the guidelines of this agreement only by joint written consideration of Sheppard and Pierce warranty departments. It shall be the responsibility of the Pierce warranty department to notify Sheppard if and when this situation occurs. Sheppard will not be held responsible for damage to other steering components such as but not limited to pumps and reservoirs due to improper adjustment of steering gear relief plungers. Vehicle downtime and towing will not be considered under warranty.

REMEDIES: The sole and exclusive remedy of Pierce for Sheppard's breach of the foregoing warranty is limited to the return and repair or reimbursement as follows:

Warranty Support: In support of the Pierce dealer network, Sheppard will provide a toll-free "Hotline" service to assist in the diagnosis and troubleshooting of steering problems. The R. H. Sheppard Co., Inc. Field Service Department can be reached at 1-800-274-7437 for assistance. Sheppard will require that Pierce dealers contact this toll-free "Hotline" for approval before product is removed from a vehicle in a warranty situation. When contacted regarding a warranty situation, the Sheppard representative will provide an authorization number for removal of the product. This Returned Goods Authorization (RGA) number must be included in all warranty correspondence and attached to all returned goods.

Procedure: In the event of a warranty situation, the servicing dealer shall contact the Sheppard Hotline and receive an RGA number before replacing any steering gear. For M110PKG1 and M110SAU1 steering gear models, the dealer will first obtain an RGA number from Sheppard, and then order the replacement gear from Pierce. Replacement M110PKG1 and M110SAU1 steering gears shall be shipped from Pierce once those models are in full production. A warranty claim for both parts and labor will then be generated by the dealer and sent to Pierce. After reviewing the claim, Pierce will submit it to Sheppard for reimbursement.

Parts Reimbursement: Sheppard agrees to reimburse Pierce at Pierce's purchase price plus 30% mark-up for parts found to be defective within the warranty period. Parts being returned for warranty consideration shall be sent to the R. H. Sheppard Company, 447 E. Middle St., Hanover, PA 17331 ATTN: Warranty Dept. Sheppard's determination as to whether the part is covered by the foregoing warranty is final and conclusive. Sheppard requires the return of complete steering gears only. Individual seals replaced under warranty **should not** be returned unless specifically requested by Sheppard. All parts being returned for warranty consideration must be clearly tagged with all pertinent warranty information including, but not limited to (1) Returned Goods Authorization number (RGA); (2) claim number; (3) date in service; (4) date of failure; (5) mileage; (6) part number; (7) labor hours; (8) dealer labor rate and; (9) dollar amount claimed. Claims submitted without prior authorization are subject to rejection under this agreement.

Labor: Labor to repair Sheppard product found to be defective within the warranty period will be reimbursed at not more than 10 hours per vehicle. Labor shall be reimbursed at the rate of $85.00 USD per hour for M110PGK1 and M110SAU1 steering gears.

Freight: Pierce will collect M110PGK1 and M110SAU1 warranty material at a designated collection point. Inbound freight to the Pierce collection point will be the responsibility of Pierce. All warranty material should be returned from the Pierce collection point to R. H. Sheppard Co. Freight Collect by a Sheppard-specified common carrier based on location of the Pierce collection point. Sheppard does not require the return of failed seals. Any freight charges incurred for the return of seals will be the responsibility of Pierce. Parts returned for warranty consideration without prior authorization are subject to rejection under this agreement and may be subject to a charge back of inbound freight charges. Parts rejected under this warranty will be returned to Pierce Freight Collect or scrapped by Sheppard at Pierce's discretion.

Outside Purchases: Pierce authorized dealers shall be the only outlet for repair, warranty service and parts for Sheppard products applied to Pierce vehicles. Sheppard will not be responsible for consumables such as hoses, belts, fluids, fittings or miscellaneous shop material that may be required for the repair of the product.

Warranty Documentation: Warranty credit memos will be issued monthly to the Pierce Warranty Department. Monthly credit memos will include (1) claim number; (2) part number; (3) parts reimbursement; (4) labor reimbursement; (5) any applicable Pierce reference number and; (6) reason for rejection or acceptance of the claim. Credit memos will be issued in U.S. funds. Debits for warranty claims will not be accepted under this agreement. Claim disposition will constitute the final and conclusive resolution of warranty claims.

Parts Retention: Sheppard will retain parts submitted for warranty consideration for a period of sixty (60) days for any material found to be rejected for warranty. Sheppard will notify Pierce within sixty (60) days of receipt of Sheppard's determination as to whether any such part is covered by this warranty. Warranty reimbursement will be issued within thirty days of receipt of material at Sheppard.

Good-Will Requests: Good-Will requests will be considered jointly between Sheppard and Pierce for equitable compensation.

RECALLS: Sheppard retains the right to review information regarding federal motor vehicle recall and /or product repair programs if Sheppard products fitted to Pierce vehicles are alleged to be non-compliant with federal motor vehicle safety standards. Sheppard retains the right to review any claims of product defect or non-compliance before participating in reimbursement of expenses incurred as a result of alleged non-compliance or defect of its products. Sheppard agrees to negotiate in good faith for the reimbursement of expenses incurred by Pierce for all administrative, material and labor cost and expense associated with any recall where Sheppard product is found to be defective or non-compliant with federal motor vehicle standards.

MISCELLANEOUS: This writing constitutes the full complete and final statement of Sheppard's limited warranty for M110PKG1 and M110SAU1 products sold to Pierce. All prior oral or written correspondence, test data, negotiations, representations, understandings and the like regarding products are merged in this writing and extinguished by it. This limited warranty may not be altered, amended extended or modified except by a writing signed by the President or Vice President of Sheppard. No employee, vendor, dealer, distributor or other representative of Sheppard has authority to make statements to extend, expand, alter or amend the terms of this Limited Warranty. Sheppard expressly disclaims any statements contrary to the Limited Warranty. Sheppard's failure at any time to enforce any of the terms and conditions stated herein shall not constitute a waiver of any provisions herein. This Limited Warranty shall be governed by and construed in accordance with the laws of the Commonwealth of Pennsylvania.

Any legal actions which may arise as a result of disputes, controversies or claims arising out of or related to this limited warranty shall be in such forum as Sheppard and Pierce shall agree, or, in the absence of agreement, in a court of appropriate jurisdiction other than in the county in which either party is located. This Limited Warranty shall not be assigned by Pierce.

COOPERATIVE EFFORT: Sheppard and Pierce agree to work cooperatively toward expanding this warranty coverage to a period of sixty months from the in service date. These cooperative efforts shall focus on examining the effects of increased heat generated by 2007 model engines and its impact on the entire power steering system.

AGREEMENT: This agreement is effective April 3, 2006 and may be modified by mutual agreement between Sheppard and Pierce of a signed amendment to be attached to the original Limited Warranty. There are no third party beneficiaries to this Limited Warranty. This warranty agreement applies to Pierce authorized dealers only. It does not encompass any special arrangements that Pierce may now have or that Pierce may enter into, with any other segments of the trucking industry. This warranty agreement does not apply to non-conforming product removed at Pierce assembly plants.

This Limited Warranty agreement between the R. H. Sheppard Co., Inc and Pierce Manufacturing Inc. may be terminated by either party with thirty days written notice prior to termination.

Signed at Pierce Manufacturing Inc., Appleton, WI this _____ day of _____, 2006.

R. H. SHEPPARD CO., INC.

_____
Authorized Signature

_____
Title

PIERCE MANUFACTURING INC.

_____
Authorized Signature

_____
Title

Fire and Rescue Apparatus

Lifetime Fifty (50) Year Structural Integrity Custom Chassis Frame

Limited Warranty

1. LIMITED WARRANTY

Subject to the limitations and exclusions set forth below, Pierce Manufacturing provides the following warranty to the Buyer:

Coverage:	**Custom chassis frame rail manufactured by Pierce shall be free from defects in material and workmanship**
Warranty Begins:	**The date of the original purchase invoice (issued when the product ships from the factory).**
Warranty Period Ends After:	**Fifty (50) Years (Expected Life of Apparatus)**
Conditions and Exclusions: **See Also Paragraphs 2 thru 4**	**This warranty does not apply to damage caused by corrosion.**

This limited warranty shall apply only if the product is properly maintained in accordance with Pierce's maintenance instructions and manuals and is used in service which is normal to the particular model. Normal service means service which does not subject the product to stresses or impacts greater than normally result from careful use. If the Buyer discovers a defect or nonconformity, it must notify Pierce in writing within thirty (30) days after the date of discovery, but in any event prior to the expiration of the warranty period. THIS LIMITED WARRANTY MAY NOT BE ASSIGNED OR OTHERWISE TRANSFERRED BY THE BUYER TO ANY SUBSEQUENT USER OR PURCHASER OR TO ANY OTHER PERSON OR ENTITY.

Notwithstanding anything to the contrary herein, Pierce makes no warranty whatsoever as to:

(a) any integral parts, components, attachments or trade accessories of or to the product that are not manufactured by Pierce, including but not limited to engines, transmissions, drivelines, axles, water pumps and generators; with respect to all such parts, components, attachments and accessories, Pierce shall assign to Buyer the applicable warranties, if any, made by the respective manufacturers thereof;

(b) any vehicle, chassis, or component, part, attachment or accessory damaged by misuse, neglect, fire, exposure to severe environmental or chemical conditions, acidic environment, improper maintenance, accident, crash, or force majeure such as natural disaster, lightning, earthquake, windstorm, hail, flood, war or riot;

(c) any vehicle, chassis or component, part, attachment or accessory that has been repaired, altered or assembled in any way by any person or entity other than Pierce which, in the sole judgment of Pierce, adversely affects the performance, stability or purpose for which it was manufactured; or

(d) products or parts which may in the ordinary course wear out and have to be replaced during the warranty period, including, but not limited to, tires, fluids, gaskets and light bulbs. Pierce assumes no responsibility for the assembly of its parts or subassemblies into finishing products or vehicles unless the assembly is performed by Pierce.

The original purchaser may void this warranty in part or in its entirety if the product is repaired or replaced (a) without prior written approval of the Pierce Customer Service Department; or (b) at a facility which has not been approved by Pierce as to technical capability. Any repairs, modifications, alterations or aftermarket parts added after manufacture without the authorization of Pierce may void this warranty.

2. DISCLAIMERS OF WARRANTIES

THE WARRANTY SET FORTH IN PARAGRAPH 1 IS THE SOLE AND EXCLUSIVE WARRANTY GIVEN BY PIERCE. PIERCE HEREBY DISCLAIMS AND EXCLUDES ALL OTHER WARRANTIES, WHETHER EXPRESS, IMPLIED OR STATUTORY, INCLUDING WITHOUT LIMITATION ANY WARRANTY OF MERCHANTABILITY, ANY WARRANTY OF FITNESS FOR A PARTICULAR PURPOSE, AND ANY WARRANTIES ARISING FROM COURSE OF DEALING OR USAGE OF TRADE.

3. BUYER'S EXCLUSIVE REMEDY.

If the product fails to conform to the warranty set forth in paragraph 1 during the warranty period, and such nonconformity is not due to misuse, neglect, accident or improper maintenance, Buyer must notify Pierce within the time period specified in paragraph 1, and shall make the product available for inspection by Pierce or its designated agent. At the request of Pierce, any allegedly defective product shall be returned to Pierce by Buyer for examination and/or repair. Buyer shall be responsible for the cost of such transportation, and for risk of loss of or damage to the product during transportation. Within a reasonable time, Pierce shall repair or replace (at Pierce's option and expense) any nonconforming or defective parts. Repair or replacement shall be made only by a facility approved in advance in writing by Pierce. THIS REMEDY SHALL BE THE EXCLUSIVE AND SOLE REMEDY FOR ANY BREACH OF WARRANTY.

4. EXCLUSION OF CONSEQUENTIAL AND INCIDENTAL DAMAGES.

Notwithstanding anything to the contrary herein or in any agreement between Pierce and Buyer, IN NO EVENT SHALL PIERCE BE LIABLE FOR ANY CONSEQUENTIAL, INCIDENTAL, SPECIAL, INDIRECT, OR PUNITIVE DAMAGES WHATSOEVER, WHETHER ARISING OUT OF BREACH OF CONTRACT, WARRANTY, TORT (INCLUDING NEGLIGENCE AND STRICT LIABILITY) OR OTHER THEORY OF LAW OR EQUITY, WITH RESPECT TO VEHICLES OR OTHER PRODUCTS SOLD BY PIERCE, OR THEIR OPERATION OR FAILURE TO OPERATE, OR ANY DEFECTS THEREIN, OR ANY UNDERTAKINGS, ACTS OR OMISSIONS RELATED THERETO, REGARDLESS OF WHETHER PIERCE HAS BEEN INFORMED OF THE POSSIBILITY OF ANY SUCH DAMAGES. Without limiting the generality of the foregoing, Pierce specifically disclaims any liability for property or personal injury damages, penalties, damages for lost profits or revenues, loss of vehicles or products or any associated equipment, cost of substitute vehicles or products, down-time, delay damages, any other types of economic loss, or for any claims by any third party for any such damages.

Note: Any Surety Bond, if a part of the sale of the vehicle as to which this limited warranty is provided, applies only to this Pierce Basic One Year Limited Warranty for such vehicle, and not to other warranties made by Pierce in a separate document (if any) or to the warranties (if any) made by any manufacturer (other than Pierce) of any part, component, attachment or accessory that is incorporated into or attached to the vehicle.

Fire and Rescue Apparatus

Three (3) Year Material and Workmanship
TAK-4 Independent Front Suspension

Limited Warranty

1. LIMITED WARRANTY

Subject to the limitations and exclusions set forth below, Pierce Manufacturing provides the following warranty to the Buyer:

Coverage:	**The TAK-4 Front Independent Suspension and Steering Gears shall be free from defects in material and workmanship.**
Warranty Begins:	**The date of the original purchase invoice (issued when the product ships from the factory).**
Warranty Period Ends After:	**Three (3) Years -or- 30,000 Miles**
Conditions and Exclusions: **See Also Paragraphs 2 thru 4**	**This limited warranty excludes brake pads, brake rotors, seal boots and shock absorbers.**

This limited warranty shall apply only if the product is properly maintained in accordance with Pierce's maintenance instructions and manuals and is used in service which is normal to the particular model. Normal service means service which does not subject the product to stresses or impacts greater than normally result from careful use. If the Buyer discovers a defect or nonconformity, it must notify Pierce in writing within thirty (30) days after the date of discovery, but in any event prior to the expiration of the warranty period. THIS LIMITED WARRANTY MAY NOT BE ASSIGNED OR OTHERWISE TRANSFERRED BY THE BUYER TO ANY SUBSEQUENT USER OR PURCHASER OR TO ANY OTHER PERSON OR ENTITY.

Notwithstanding anything to the contrary herein, Pierce makes no warranty whatsoever as to:

(a) any integral parts, components, attachments or trade accessories of or to the product that are not manufactured by Pierce, including but not limited to engines, transmissions, drivelines, axles, water pumps and generators; with respect to all such parts, components, attachments and accessories, Pierce shall assign to Buyer the applicable warranties, if any, made by the respective manufacturers thereof;

(b) any vehicle, chassis, or component, part, attachment or accessory damaged by misuse, neglect, fire, exposure to severe environmental or chemical conditions, acidic environment, improper maintenance, accident, crash, or force majeure such as natural disaster, lightning, earthquake, windstorm, hail, flood, war or riot;

(c) any vehicle, chassis or component, part, attachment or accessory that has been repaired, altered or assembled in any way by any person or entity other than Pierce which, in the sole judgment of Pierce, adversely affects the performance, stability or purpose for which it was manufactured; or

(d) products or parts which may in the ordinary course wear out and have to be replaced during the warranty period, including, but not limited to, tires, fluids, gaskets and light bulbs. Pierce assumes no responsibility for the assembly of its parts or subassemblies into finishing products or vehicles unless the assembly is performed by Pierce.

The original purchaser may void this warranty in part or in its entirety if the product is repaired or replaced (a) without prior written approval of the Pierce Customer Service Department; or (b) at a facility which has not been approved by Pierce as to technical capability. Any repairs, modifications, alterations or aftermarket parts added after manufacture without the authorization of Pierce may void this warranty.

2. DISCLAIMERS OF WARRANTIES

THE WARRANTY SET FORTH IN PARAGRAPH 1 IS THE SOLE AND EXCLUSIVE WARRANTY GIVEN BY PIERCE. PIERCE HEREBY DISCLAIMS AND EXCLUDES ALL OTHER WARRANTIES, WHETHER EXPRESS, IMPLIED OR STATUTORY, INCLUDING WITHOUT LIMITATION ANY WARRANTY OF MERCHANTABILITY, ANY WARRANTY OF FITNESS FOR A PARTICULAR PURPOSE, AND ANY WARRANTIES ARISING FROM COURSE OF DEALING OR USAGE OF TRADE.

3. BUYER'S EXCLUSIVE REMEDY.

If the product fails to conform to the warranty set forth in paragraph 1 during the warranty period, and such nonconformity is not due to misuse, neglect, accident or improper maintenance, Buyer must notify Pierce within the time period specified in paragraph 1, and shall make the product available for inspection by Pierce or its designated agent. At the request of Pierce, any allegedly defective product shall be returned to Pierce by Buyer for examination and/or repair. Buyer shall be responsible for the cost of such transportation, and for risk of loss of or damage to the product during transportation. Within a reasonable time, Pierce shall repair or replace (at Pierce's option and expense) any nonconforming or defective parts. Repair or replacement shall be made only by a facility approved in advance in writing by Pierce. THIS REMEDY SHALL BE THE EXCLUSIVE AND SOLE REMEDY FOR ANY BREACH OF WARRANTY.

4. EXCLUSION OF CONSEQUENTIAL AND INCIDENTAL DAMAGES.

Notwithstanding anything to the contrary herein or in any agreement between Pierce and Buyer, IN NO EVENT SHALL PIERCE BE LIABLE FOR ANY CONSEQUENTIAL, INCIDENTAL, SPECIAL, INDIRECT, OR PUNITIVE DAMAGES WHATSOEVER, WHETHER ARISING OUT OF BREACH OF CONTRACT, WARRANTY, TORT (INCLUDING NEGLIGENCE AND STRICT LIABILITY) OR OTHER THEORY OF LAW OR EQUITY, WITH RESPECT TO VEHICLES OR OTHER PRODUCTS SOLD BY PIERCE, OR THEIR OPERATION OR FAILURE TO OPERATE, OR ANY DEFECTS THEREIN, OR ANY UNDERTAKINGS, ACTS OR OMISSIONS RELATED THERETO, REGARDLESS OF WHETHER PIERCE HAS BEEN INFORMED OF THE POSSIBILITY OF ANY SUCH DAMAGES. Without limiting the generality of the foregoing, Pierce specifically disclaims any liability for property or personal injury damages, penalties, damages for lost profits or revenues, loss of vehicles or products or any associated equipment, cost of substitute vehicles or products, down-time, delay damages, any other types of economic loss, or for any claims by any third party for any such damages.

Note: Any Surety Bond, if a part of the sale of the vehicle as to which this limited warranty is provided, applies only to this Pierce Basic One Year Limited Warranty for such vehicle, and not to other warranties made by Pierce in a separate document (if any) or to the warranties (if any) made by any manufacturer (other than Pierce) of any part, component, attachment or accessory that is incorporated into or attached to the vehicle.

Fire and Rescue Apparatus

Two (2) Year Material and Workmanship
Meritor Axles
Limited Warranty

1. LIMITED WARRANTY

Subject to the limitations and exclusions set forth below, Pierce Manufacturing provides the following warranty to the Buyer:

Coverage:	**The Meritor axle shall be covered by Meritor as indicated in the attached Meritor warranty coverage description**
Warranty Begins:	**The date of the original purchase invoice (issued when the product ships from the factory).**
Warranty Period Ends After:	**Two (2) Year**
Conditions and Exclusions: **See Also Paragraphs 2 thru 4**	**The exclusions listed in the attached Meritor warranty description shall apply.**

This limited warranty shall apply only if the product is properly maintained in accordance with Pierce's maintenance instructions and manuals and is used in service which is normal to the particular model. Normal service means service which does not subject the product to stresses or impacts greater than normally result from careful use. If the Buyer discovers a defect or nonconformity, it must notify Pierce in writing within thirty (30) days after the date of discovery, but in any event prior to the expiration of the warranty period. THIS LIMITED WARRANTY MAY NOT BE ASSIGNED OR OTHERWISE TRANSFERRED BY THE BUYER TO ANY SUBSEQUENT USER OR PURCHASER OR TO ANY OTHER PERSON OR ENTITY.

Notwithstanding anything to the contrary herein, Pierce makes no warranty whatsoever as to:

(a) any integral parts, components, attachments or trade accessories of or to the product that are not manufactured by Pierce, including but not limited to engines, transmissions, drivelines, axles, water pumps and generators; with respect to all such parts, components, attachments and accessories, Pierce shall assign to Buyer the applicable warranties, if any, made by the respective manufacturers thereof;

(b) any vehicle, chassis, or component, part, attachment or accessory damaged by misuse, neglect, fire, exposure to severe environmental or chemical conditions, acidic environment, improper maintenance, accident, crash, or force majeure such as natural disaster, lightning, earthquake, windstorm, hail, flood, war or riot;

(c) any vehicle, chassis or component, part, attachment or accessory that has been repaired, altered or assembled in any way by any person or entity other than Pierce which, in the sole judgment of Pierce, adversely affects the performance, stability or purpose for which it was manufactured; or

(d) products or parts which may in the ordinary course wear out and have to be replaced during the warranty period, including, but not limited to, tires, fluids, gaskets and light bulbs. Pierce assumes no responsibility for the assembly of its parts or subassemblies into finishing products or vehicles unless the assembly is performed by Pierce.

The original purchaser may void this warranty in part or in its entirety if the product is repaired or replaced (a) without prior written approval of the Pierce Customer Service Department; or (b) at a facility which has not been approved by Pierce as to technical capability. Any repairs, modifications, alterations or aftermarket parts added after manufacture without the authorization of Pierce may void this warranty.

2. DISCLAIMERS OF WARRANTIES

THE WARRANTY SET FORTH IN PARAGRAPH 1 IS THE SOLE AND EXCLUSIVE WARRANTY GIVEN BY PIERCE. PIERCE HEREBY DISCLAIMS AND EXCLUDES ALL OTHER WARRANTIES, WHETHER EXPRESS, IMPLIED OR STATUTORY, INCLUDING WITHOUT LIMITATION ANY WARRANTY OF MERCHANTABILITY, ANY WARRANTY OF FITNESS FOR A PARTICULAR PURPOSE, AND ANY WARRANTIES ARISING FROM COURSE OF DEALING OR USAGE OF TRADE.

3. BUYER'S EXCLUSIVE REMEDY.

If the product fails to conform to the warranty set forth in paragraph 1 during the warranty period, and such nonconformity is not due to misuse, neglect, accident or improper maintenance, Buyer must notify Pierce within the time period specified in paragraph 1, and shall make the product available for inspection by Pierce or its designated agent. At the request of Pierce, any allegedly defective product shall be returned to Pierce by Buyer for examination and/or repair. Buyer shall be responsible for the cost of such transportation, and for risk of loss of or damage to the product during transportation. Within a reasonable time, Pierce shall repair or replace (at Pierce's option and expense) any nonconforming or defective parts. Repair or replacement shall be made only by a facility approved in advance in writing by Pierce. THIS REMEDY SHALL BE THE EXCLUSIVE AND SOLE REMEDY FOR ANY BREACH OF WARRANTY.

4. EXCLUSION OF CONSEQUENTIAL AND INCIDENTAL DAMAGES.

Notwithstanding anything to the contrary herein or in any agreement between Pierce and Buyer, IN NO EVENT SHALL PIERCE BE LIABLE FOR ANY CONSEQUENTIAL, INCIDENTAL, SPECIAL, INDIRECT, OR PUNITIVE DAMAGES WHATSOEVER, WHETHER ARISING OUT OF BREACH OF CONTRACT, WARRANTY, TORT (INCLUDING NEGLIGENCE AND STRICT LIABILITY) OR OTHER THEORY OF LAW OR EQUITY, WITH RESPECT TO VEHICLES OR OTHER PRODUCTS SOLD BY PIERCE, OR THEIR OPERATION OR FAILURE TO OPERATE, OR ANY DEFECTS THEREIN, OR ANY UNDERTAKINGS, ACTS OR OMISSIONS RELATED THERETO, REGARDLESS OF WHETHER PIERCE HAS BEEN INFORMED OF THE POSSIBILITY OF ANY SUCH DAMAGES. Without limiting the generality of the foregoing, Pierce specifically disclaims any liability for property or personal injury damages, penalties, damages for lost profits or revenues, loss of vehicles or products or any associated equipment, cost of substitute vehicles or products, down-time, delay damages, any other types of economic loss, or for any claims by any third party for any such damages.

Note: Any Surety Bond, if a part of the sale of the vehicle as to which this limited warranty is provided, applies only to this Pierce Basic One Year Limited Warranty for such vehicle, and not to other warranties made by Pierce in a separate document (if any) or to the warranties (if any) made by any manufacturer (other than Pierce) of any part, component, attachment or accessory that is incorporated into or attached to the vehicle.

MERITOR® COMMERCIAL VEHICLE SYSTEMS

WARRANTY/MODEL YEAR 2018 VEHICLES

MERITOR®



WARRANTY INFORMATION CONTENTS

Effective Model Year 2018 Vehicles

Linehaul 3-4
General Service 5-6
Heavy Service 7-8
Off-Highway Service 9
Terms and Conditions 10

How to Read Warranty Coverage

Number of Years	Mileage (in thousands) Unl=Unlimited	P=Parts Only P&L=Parts & Labor

Notice:

Models or components that are approved for use by Meritor's vocational guidelines contained in Meritor Publication TP-9441 for axles, SP-8320 for trailer axles, TP-12126 for drivelines, which are not specifically listed, are warranted for one year, unlimited miles, parts only (1/Unl/P).

Products purchased on an incomplete vehicle (glider) are limited to one year, unlimited miles parts only (1/Unl/P).

Advantage Program

Purchasing additional coverage on select components will continue to safeguard your investment against major repair costs after the initial base coverage expires. You can find out more about the Advantage Program by visiting www.meritor.com or by contacting Meritor at 866-OnTrac1 (866-668-7221).

LINEHAUL WARRANTY INFORMATION

Linehaul Vehicles

- Auto Hauler
- Bulk Hauler
- Chip Hauler (Truck)*
- Doubles
- Flatbed
- General Freight
- Grain Hauler
- Livestock Hauler
- Moving Van
- Pipe Hauler
- Refrigerated Freight
- Tanker
- Triples

* Chip Hauler vehicles require specific axle models listed below and Linehaul condition to be eligible for Linehaul warranty consideration.

Linehaul Typically Is

- High mileage operation (over 60,000 miles/year)
- Well maintained major highways of concrete or asphalt construction
- Greater than 30 miles between starting and stopping

Coverage under Meritor's warranty require that the application of products be properly approved pursuant to OEM and Meritor approvals. Refer to TP-9441 for axles, SP-8320 for trailer axles, TP-12126 for drivelines, and/or contact Meritor regarding specific application approval questions on any product line.

Front Non-Drive Steer Axles – 5/750/P&L

FD-965	FF-966	MFS-10-144A-N	MFS-12-132C-N	MFS-13-122C-N	MFS-14-143A-N
FF-941	FF-967	MFS-12-122A-N	MFS-12-143A-N	MFS-13-132B-N	
FF-942	FG-941	MFS-12-122B-N	MFS-12E-143A-N	MFS-13-132C-N	
FF-943	FG-943	MFS-12-122C-N	MFS-12-144A-N	MFS-13-143A-N	
FF-944	MFS-10-122A	MFS-12E-122A-N	MFS-13-122A-N	MFS-13-144A-N	
FF-961	MFS-10-143A-N	MFS-12-132B-N	MFS-13-122B-N	MFS-14-122A-N	

Rear Drive Single Axles – 5/750/P&L

RS-19-144/145/A	RS-21-160
MS-19-14X	RS-23-160
MS-21-144	RS-23-161
RS-21-145	RS-23-186

Drivelines

RPL	5/500/P, 1/Unl/P&L
MXL	3/350/P, 1/Unl/P&L
155N	1/Unl/P
92N	1/Unl/P

Rear Drive Tandem/Tridem Axles – 5/750/P&L

RT-34-144/P/A	MA-40-165	MT-40-943
RT-40-145/A	MA-40-175	MT-40-943-SP
RT-40-160/P[1,2]	MT-34-14X/P	RZ-166[2]
RT-46-160/P[1,2]	MT-40-14X/P	RZ-188
RT-46-164EH/P[1,2]	MT-40-14X/P	
RT-50-160/P[1,2]	MT-40-144/P	

[1] These models required for Chip Hauler and Linehaul warranty consideration.
[2] Each vehicle must have a Request for Application Recommendation (RAR) approved by Meritor prior to vehicle build. All RARs must identify the chassis number or VIN. Refer to Product Information Letter #303 and #396 for further details.

LINEHAUL WARRANTY INFORMATION

Brake Components

Cam Q Series Trailer Brakes	5/500/P, 1/100/L
LX500 Feature[1]	5/750/P&L
Q+ Drum Brake™	5/500/P, 1/Unl/P&L
ASA	5/500/P, 1/Unl/P&L
Hubs/Cast Drums and Other Wheel-end Components	1/Unl/P
Hydraulic Disc Brakes	1/Unl/P
All Other Brakes	1/Unl/P
STEELite X30 Drum Brake™[2]	12-Years or Wearable Life/P
EX+ Air Disc Brake™	5/500/P, 1/Unl/L

[1] Includes: bushing, seal, cam, ASA lubrication and wear coverage of 3/500/P&L.

[2] Based on stamped wear diameter max.

Trailer Axles

Beam and Brackets	5/500/P, 1/100/L
Wheel End Systems[1]	
Standard System[2]	1/100/P&L
PreSet by Meritor[3]	5/500/P&L
AxlePak5[4]	5P/L
AxlePak7[5]	7P/L

[1] Includes hub, wheel seals and wheel bearings—all systems require annual inspections and proper documentation to ensure full coverage.

[2] When installed by Meritor.

[3] Requires approved hubcap stating PreSet by Meritor on hubcap face.

[4] When specified with AxlePak5 wheel end system, coverage on MTIS thru-tee and stator is 5/500P, 3/500L.

[5] When specified with AxlePak7 wheel end system, coverage on MTIS thru-tee and stator is 7/750P, 3/500L.

(For brake components and ABS coverage, refer to appropriate product warranties.)

TAG/Pusher Axles[1]

TQ, TQD, TR, TRD Beam and Brackets	5/750/P&L

[1] For brake components and ABS Coverage, refer to appropriate product warranties.

Meritor Tire Inflation System by PSI

MTIS Components	3/500/P&L

Trailer Air Suspension Systems

MPA38/40 (Tandem Axle Parallelogram)[1]	
Major Structural Components	5/500/P, 1/100/L
Curbing Damage Warranty[2]	5/500/P, 1/100/L
Height Control Valve	1/100/P&L
Shock Absorbers	2/200/P&L
Air Springs	2/200/P, 1/100/L
Bushings	7/700/P, 5/500/L
PinLoc Air Controls	1/100/P&L
PinLoc Actuator	3/300/P&L
MPA20 (Single Axle Parallelogram)	
Major Structural Components	5/500/P, 1/100/L
Height Control Valve	1/100/P&L
Shock Absorbers	2/200/P&L
Air Springs	2/200/P, 1/100/L
Bushings	7/700/P, 5/500/L
MTA (Trailing Arm)	
Major Structural Components	5/500/P, 1/100/L
Height Control Valve	1/100/P&L
Shock Absorbers	2/200/P&L
Air Springs & Rebound Straps	2/200/P, 1/100/L
Bushings	5/500/P, 3/300/L

[1] Fastener torque coverage is limited to 2/Unl P&L when torqued by Meritor

(For axle and ABS coverage, refer to appropriate product warranties.)

[2] "Curbing damage" is defined as deformation (bending, buckling, or breakage), caused by sudden impact with a curb or similar fixed object. Damage to the RideSentry slider box (the suspension sliding subframe, consisting of the frame rails, crossmembers, and central A-frame assembly), caused by accidental trailer impact with a curb or similar fixed object, is eligible for warranty coverage. Damage to other components or damage resulting from collision with another vehicle, rollover or fire is not covered under this provision. Warranty is not transferrable to another trailer VIN, and coverage does not apply if the trailer is deemed to be a total loss, scrapped, or otherwise not salvageable.

GENERAL SERVICE WARRANTY INFORMATION

General Service Vehicles

- Aerial Ladder Truck
- Aerial Platform
- Ambulance
- Auto Hauler
- Beverage Truck
- Chip Hauler
- Cross Country Coach
- Flatbed
- Front Engine Commercial Chassis
- Front Engine Integral Coach
- General Freight
- Intercity Coach
- Intermodal Chassis
- Livestock Hauler
- Meat Packer
- Moving Van
- Municipal Truck
- Newspaper Delivery
- Pick-Up and Delivery
- Pipe Hauler
- Platform Auto Hauler
- Pumper
- Rear Engine Integral Coach
- Recreational Vehicles
- Refrigerated Freight
- School Bus
- Stake Truck
- Tanker
- Tanker Truck
- Tour Bus
- Wrecker

General Service Typically Is

- Lower mileage operations (less than 60,000 miles/year)
- Generally, on-road service (less than 10% off-road)
- An average of three (3) miles between starting and stopping

Coverage under Meritor's warranty require that the application of products be properly approved pursuant to OEM and Meritor approvals. Refer to TP-9441 for axles, SP-8320 for trailer axles, TP-12126 for drivelines, and/or contact Meritor regarding specific application approval questions on any product line.

Front Drive/Non-Drive Steer Axles – 2/Unl/P&L

FD-965	FH-941	MFS-7-153C-N	MFS-12E-122A-N	MFS-13-122C-N	MFS-18-135A-N
FF-941	FH-946[1]	MFS-7-163C-N	MFS-12-122B-N	MFS-13-132B-N	MFS-18-193A-N
FF-942	FL-941	MFS-8-113B-N	MFS-12-122C-N	MFS-13-132C-N	MFS-20-133A-N
FF-943	FL-943	MFS-8-143A-N	MFS-12-132B-N	MFS-13-143A-N	MFS-20-135A-N
FF-944	MFS-6-151A-N	MFS-8-153B-N	MFS-12-132C-N	MFS-13-144A-N	MFS-20H-193A-N
FF-946	MFS-6-153B-N	MFS-8-163B-N	MFS-12-143A-N	MFS-14-122A-N	MFS-22H-135A-N
FF-961	MFS-6-162B-N	MFS-10-122A	MFS-12-144A-N	MFS-14-143A-N	MFS-22H-193A-N
FF-966	MFS-6-153C-N	MFS-10-143A-N	MFS-12E-143A-N	MFS-16-122A-N	
FF-967	MFS-6-162C-N	MFS-10-144A-N	MFS-13-122A-N	MFS-16-143A-N	
FG-941	MFS-7-113C-N	MFS-12-122A-N	MFS-13-122B-N	MFS-18-133A-N	

[1] Can also be used with reduced steer angles in tag position in Coach Applications.

Rear Drive Single Axles – 2/Unl/P&L

MS-17-13X	MS-21-144	RC-23-162[1]	MS-26-616	79163
MS-17-14X	MS-23-17X	RC-23-165[1]	MS-26-616-SP	
MS-19-13X	RS-21-145/A	RS-23-160	RS-30-185	
MS-19-14X	RS-21-160	RS-23-161	MS-30-616	
RS-17-144/145/A	RC-22-145	RS-23-186	MS-30-616-SP	
RS-19-144/145/A	RC-22-145/A	RS-24-160	RS-35-380	
MS-21-13X	RC-23-160	RC-25-160	71162	
MS-21-14X	RC-23-161	RS-26-185	71163	

[1] 3/Unl/P&L if PreSet by Meritor.

Rear Drive Tandem – 3/Unl/P&L

RT-40-160/P	RT-46-164EH/P
RT-46-160/P	RT-50-160/P

Drivelines

RPL	4/400/P, 1/Unl/P&L
MXL	3/350/P, 1/Unl/P&L
155N	1/Unl/P
92N	1/Unl/P

Rear Drive Tandem/Tridem Axles – 2/Unl/P&L

MT-34-14X/P	MT-44-14X/P	MT-58-616
RT-34-144/P/A	RT-44-145/P	RT-58-185[1]
MT-40-14X/P	RT-46-169	MT-70-380
MT-40-144/P	MT-52-616	RZ-166
RT-40-145/A	RT-52-185[1]	RZ-188

[1] Each vehicle must have a Request for Application Recommendation (RAR) approved by Meritor prior to vehicle build. All RARs must identify the chassis number or VIN. Refer to Product Information Letter #303 and #396 for further details.

GENERAL SERVICE WARRANTY INFORMATION

Brake Components

Cam Q Series Trailer Brakes	3/Unl/P, 1/Unl/L
LX500 Feature[1]	3/Unl/P&L
Cam P[3]	2/200/P
Cam	3/Unl/P
Q+ Drum Brake™	3/Unl/P&L
Q+ Drum Brake ™[3]	2/200/P&L
ASA	3/Unl/P
ASA[3]	2/200/P
Hubs/Cast Drums and Other Wheel-end Components	1/Unl/P
Hydraulic Disc Brakes	1/Unl/P
All Other Brakes	1/Unl/P
STEELite X30 Drum Brake™[2]	12-Years or Wearable Life/P
EX+ Air Disc Brake™	2/Unl/P&L

[1] Includes: bushing, seal, cam, ASA lubrication and wear coverage of 1/Unl/P.
[2] Based on stamped wear diameter max.
[3] Applies to Tour Bus and Cross Country Coach only.

Trailer Axles

Beam and Brackets[1]	5/Unl/P, 1/Unl/L
Wheel End Systems[2]	
Standard System[3]	1/Unl/P&L
AxlePak5[4]	5P/L
AxlePak7[5]	7P/L

[1] 9000 Series is 3/Unl/P, 1/Unl/L
[2] Includes hub, wheel seals and wheel bearings—all systems require annual inspections and proper documentation to ensure full coverage.
[3] When installed by Meritor.
[4] When specified with AxlePak5 wheel end system, coverage on MTIS thru-tee and stator is 5/500P, 3/500L.
[5] When specified with AxlePak7 wheel end system, coverage on MTIS thru-tee and stator is 7/750P, 3/500L.

(For brake components and ABS coverage, refer to appropriate product warranties.)

Chassis Axles (2000 Series/ChassiPak)

Beam & Brackets	6/Unl/P, 1/Unl/L
Wheel End Systems[1]	
Standard System	1/Unl/P&L
AxlePak7	7P/L
Beam and Brackets	7P/1L

[1] Includes hub, wheel seals and wheel bearings—all systems require annual inspections and proper documentation to ensure full coverage.

Trailer Air Suspension Systems

MPA38/40 (Tandem Axle Parallelogram)[1]	
Major Structural Components	5/Unl/P, 1/Unl/L
Curbing Damage Warranty[2]	5/500/P, 1/100/L
Height Control Valve	1/Unl/P&L
Shock Absorbers	2/Unl/P&L
Air Springs	2/Unl/P, 1/Unl/L
Bushings	7/700/P, 5/500/L
PinLoc Air Controls	1/Unl/P&L
PinLoc Air Actuator	3/Unl/P&L
MPA20 (Single Axle Parallelogram)	
Major Structural Components	5/Unl/P, 1/Unl/L
Height Control Valve	1/Unl/P&L
Shock Absorbers	2/Unl/P&L
Air Springs	2/Unl/P, 1/Unl/L
Bushings	7/700/P, 5/500/L
MTA (Trailing Arm)	
Major Structural Components	5/Unl/P, 1/Unl/L
Height Control Valve	1/Unl/P&L
Shock Absorbers	2/Unl/P&L
Air Springs and Rebound Straps	2/Unl/P, 1/Unl/L
Bushings[3]	5/Unl/P, 3/Unl/L

(For axle and ABS coverage, refer to appropriate product warranties.)
[1] Fastener torque coverage is limited to 2/Unl P&L when torqued by Meritor
[2] "Curbing damage" is defined as deformation (bending, buckling, or breakage), caused by sudden impact with a curb or similar fixed object. Damage to the RideSentry slider box (the suspension sliding subframe, consisting of the frame rails, crossmembers, and central A-frame assembly), caused by accidental trailer impact with a curb or similar fixed object, is eligible for warranty coverage. Damage to other components or damage resulting from collision with another vehicle, rollover or fire is not covered under this provision. Warranty is not transferrable to another trailer VIN, and coverage does not apply if the trailer is deemed to be a total loss, scrapped, or otherwise not salvageable.
[3] Raw wood applications 3/Unl/P, 1/Unl/L

TAG/Pusher Axles

TQ, TQD, TR, TRD Beam and Brackets[1]	3/Unl/P, 1/Unl/L
MC12002, MC14002, MC16003, FH946	2/Unl/P&L

(For brake components and ABS coverage, refer to appropriate product warranties.)
[1] 3/UNL/P&L if sold with PreSet by Meritor.

Meritor® Tire Inflation System by PSI

MTIS Components	3/500/P&L

HEAVY SERVICE WARRANTY INFORMATION

Heavy Service Vehicles

- Airport Rescue Fire (ARF)
- Airport Shuttle
- Asphalt Truck
- Block Truck
- Bottom Dump Trailer Combination
- Cementing Vehicle
- City Bus
- Commercial Pick-Up
- Concrete Pumper
- Construction Material Hauler
- Crash Fire Rescue (CFR)
- Mixer
- Demolition
- Drill Rig
- Dump
- Emergency Service
- Equipment Hauling
- Flatbed Trailer Hauler
- Flatbed Truck
- Fracturing Truck
- Front Loader
- Geophysical Exploration
- Hopper Trailer Combinations
- Landscaping Truck
- Liquid Waste Hauler
- Log Hauling
- Lowboy
- Michigan Special Gravel Trains
- Michigan Special Log Hauler
- Michigan Special Steel Hauler
- Michigan Special Waste Vehicle
- Municipal Dump
- Rapid Intervention Vehicle (RIV)
- Rear Loader (Refuse)
- Recycling Truck
- Residential Pick-Up (Refuse)
- Rigging Truck
- Roll-Off
- Scrap Truck
- Semi-End Dump
- Sewer/Septic Vacuum
- Shuttle Bus
- Side Loader
- Snowplow/Snowblower
- Steel Hauling
- Tanker
- Tank Truck
- Tractors with Pole Trailers
- Tractor/Trailer with Jeeps
- Transfer Dump
- Transfer Vehicle
- Transit Bus
- Trolley
- Utility Truck
- Winch Truck

Heavy Service Typically Is

- Moderate mileage operation (less than 60,000 miles per year)
- On/Off road vocations (10% or more off-road)
- Moderate to frequent stops/starts (up to 10 stops per mile)

Coverage under Meritor's warranty require that the application of products be properly approved pursuant to OEM and Meritor approvals. Refer to TP-9441 for axles, SP-8320 for trailer axles, TP-12126 for drivelines, and/or contact Meritor regarding specific application approval questions on any product line.

Front Drive/Non-Drive Steer Axles – 2/Unl/P&L

FD-965	FH-941	MFS-8-113B-N	MFS-12-132C-N	MFS-13-155	MFS-22H-135A-N	MX-17-140
FF-941	FH-946	MFS-8-153B-N	MFS-12-143A-N	MFS-14-122	MFS-22H-193A-N	MX-19-140
FF-942	FL-941	MFS-8-163B-N	MFS-12-144A-N	MFS-14-143A-N	RF-16-145	MX-21-140
FF-943	FL-943	MFS-10-122A	MFS-12-155	MFS-16-122A-N	RF-21-160	MX-21-160
FF-944	MFS-6-151A-N	MFS-10-143A-N	MFS-13-122	MFS-16-143A-N	MX-10-120	MX-23-160
FF-946	MFS-6-153B	MFS-10-144A-N	MFS-13-122B-N	MFS-18-133A-N	MX-10-120 EVO	MX-810
FF-961	MFS-6-162B	MFS-12-122	MFS-13-122C-N	MFS-18-135A-N	MX-12-120	
FF-966	MFS-6-162C	MFS-12-122B-N	MFS-13-132B-N	MFS-18-193A-N	MX-12-120 EVO	
FF-967	MFS-7-113C-N	MFS-12-122C-N	MFS-13-132C-N	MFS-20-133A-N	MX-14-120	
FG-941	MFS-7-153C-N	MFS-12E-122	MFS-13-143A-N	MFS-20-135A-N	MX-16-120	
FG-943	MFS-7-163C-N	MFS-12-132B-N	MFS-13-144A-N	MFS-20H-193A-N	MX-18-120	

Drivelines

RPL	3/Unl/P, 1/Unl/P&L
92N	1/Unl/P&L
MXL	1/Unl/P&L

Rear Drive Single Axles – 2/Unl/P&L

MS-17-14X	RS-23-160	MS-30-616-SP
RS-17-144/145/A	RC-23-161	RS-30-185/380
MS-19-14X	RS-23-161	MS-35-380
RS-19-144	RS-23-186/380	RS-38-380
MS-21-114	RC-23-162	RC-25-160
MS-21-14X	RC-23-165	RC-26-633
RS-21-145	RS-24-160	MT-58-616
RS-21-145/A	RS-25-160	MT-58-616-SP
RS-21-160	MS-26-616	71162
RC-22-145	MS-26-616-SP	71163
RC-23-160	RS-26-185/380	79163
RH-23-160	MS-30-616	

HEAVY SERVICE WARRANTY INFORMATION

Rear Drive Tandem/Tridem Axles – 2/Unl/P&L

MT-34-14X/P
RT-34-144/P/A
MT-40-14X/P
RT-40-145/A
MT-44-14X/P
RT-44-145/P
RT-46-169
MT-52-616
MT-52-616-SP
RT-52-185/380[1,2]
MT-58-616
MT-58-616-SP
RT-58-185/380[1,2]
RT-70-380
MT-70-380
RZ-166
RZ-188

[1] Axle model designated will vary according to options and variations specified on these axles. Contact Meritor Axle Applications Engineering for details.
[2] Each vehicle must have a Request for Application Recommendation (RAR) approved by Meritor prior to vehicle build. All RARs must identify the chassis number or VIN. Refer to Product Information Letter #303 and #396 for further details.

Brake Components

Cam P	3/Unl/P
Cam P[3]	2/100/P
Cam Cast Plus™	2/100/P&L
Q+ Drum Brake™	3/Unl/P&L
Q+ Drum Brake™[2]	2/100/P&L
ASA	3/Unl/P
ASA[2]	2/100/P
Hubs/Cast Drums and Other Wheel-end Components	1/Unl/P
Hydraulic Disc Brakes	1/Unl/P
All Other Brakes	1/Unl/P
EX+ Air Disc Brake	2/100/P&L

[1] Based on stamped wear diameter max.
[2] Applies to City Bus, Trolley, Shuttle Bus and Airport Shuttle only.
[3] Warranty for all non-Meritor ASAs supplied by Meritor for all Heavy Service vocations is 1/100/P.

Transfer Cases – 1/Unl/P

MTC-4208
MTC-4210
MTC-4213
T-2111
T-2119

Rear Drive Tandem – 3/Unl/P&L

RT-40-160/P/A[3]
RT-46-160/P/A[1,3]
RT-46-164EH/P/A[2,3]
RT-50-160/P/A[3]

[1] U.S. only. Canadian warranty = 1/Unl/P for combination vehicles only.
[2] Axle model designated will vary according to options and variations specified on these axles. Contact Meritor Axle Applications Engineering for details.
[3] Each vehicle must have a Request for Application Recommendation (RAR) approved by Meritor prior to vehicle build. All RARs must identify the chassis number or VIN. Refer to Product Information Letter #303 and #396 for further details.

Meritor Tire Inflation System by PSI

MTIS Components	3/500/P&L

Trailer Air Suspension Systems

MTA (Trailing Arm)	
Major Structural Components[1]	5/Unl/P, 1/Unl/L
Height Control Valve	1/Unl/P&L
Shock Absorbers	2/Unl/P&L
Air Springs	2/Unl/P, 1/Unl/L
Bushings[1]	5/Unl/P, 3/Unl/L

[1] Raw wood applications 3/Unl/P, 1/Unl/L

(For axle and ABS coverage, refer to appropriate product warranties.)

Center Non-drive Axles – 2/Unl/P&L

MC26000
71063
79063

Trailer Axles

Beam and Brackets[1]	5/Unl/P, 1/Unl/L
Wheel End Systems[2]	
Standard System[3]	1/Unl/P&L

[1] 9000 Series is 3/Unl/P, 1/Unl/L.
[2] Includes hub, wheel seals and wheel bearings—all systems require annual inspections and proper documentation to ensure full coverage.
[3] When installed by Meritor.

(For brake components and ABS coverage, refer to appropriate product warranties.)

OFF-HIGHWAY SERVICE WARRANTY INFORMATION

Industrial And Off-Highway Service Vehicles

- Load-On/Load-Off
- Port Tractor
- Rail Yard Spotter
- Roll-On/Roll-Off
- Stevedoring Tractor
- Trailer Spotter
- Yard Jockey
- All-Terrain Crane
- Rough Terrain Crane
- Forestry
- Material Handling
- Specialized Heavy Haul
- Specialized Mining
- Excavator
- Compactor
- Fertilizer Spreader
- Snow Blower
- Mining
- Rail Car Mover
- Loader
- Tow Tractor
- Pushback Tractor

Industrial And Off-Highway Service Typically Is

- Low mileage operation
- Low speed vehicle speed restriction
- Vehicles are **not** typically licensed for highway use
- Six (6) starts/stops per mile (typical)

Coverage under Meritor's warranty require that the application of products be properly approved pursuant to OEM and Meritor approvals. Refer to TP-9441 for axles, TP-12126 for drivelines, and/or contact Meritor regarding specific application approval questions on any product line.

Drive Steer Axles – 1/Unl/P

MOR MOX MOC

Front Non-Drive Steer Axles – 1/Unl/P

FF - 941	MFS-12-143A-N	MFS-18-135A-N
FF - 943	MFS-12-144A-N	MFS-18-193A-N
FF - 961	MFS-13-143A-N	MFS-20-133A-N
FF - 966	MFS-13-144A-N	MFS-20-135A-N
FG - 941	MFS-14-143A-N	MFS-20H-193A-N
FG - 943	MFS-16-122A-N	MFS-22H-135A-N
FL - 941	MFS-16-143A-N	MFS-22H-193A-N
FL - 943	MFS-18-133A-N	MON-Z0 FAMILY

Planetary Axles – 1/Unl/P

MOR MOX MOC MOT

Rear Drive Single Axles – 1/Unl/P

RS-23-186	RS-24-160-SP	RS-30-185
RS-23-380	MS-30-616	RS-30-380
RS-24-160	MS-30-616-SP	MS-35-380

Drivelines – 1/Unl/P

RPL MXL

Rear Drive Tandem Axles – 2/Unl/P

MT-44-14X/P	MT-58-616	RT-44-145/P	RT-50-160/P
MT-52-616	MT-58-616-SP	RT-46-160/P	RZ-166
MT-52-616-SP	MT-70-380	RT-46-164EH/P	

Brake Components

Cam P	3/Unl/P
Q+ Drum Brake™	3/Unl/P&L
ASA	3/Unl/P
Hubs/Cast Drums and Other Wheel-end Components	1/Unl/P
Hydraulic Disc Brakes	1/Unl/P
All Other Brakes	1/Unl/P

TERMS AND CONDITIONS

Coverage Exclusions

Product Description

All
The cost of any repairs, replacements or adjustments to a covered component (1) associated with noise; (2) resulting from the use or installation of non-genuine Meritor components or materials; (3) due to vibration associated with improper operation or misapplication of drivetrain components; and (4) damage resulting from corrosion.

For axle assemblies supplied by Meritor with suspension and interface brackets designed and/or attached by non-Meritor parties, Meritor warranty coverage does not apply to the brackets, bracket attachment methods, and field issues caused by brackets or bracket attachments to any covered component unless specified in a separate OEM agreement.

Front Axles
King Pin Bushings.

Rear Axles
Self-contained traction equalizers and oil filters. The use of NoSPIN differentials will result in the exclusion of axle shafts from warranty considerations. NoSPIN is a product of Eaton.

ASA
Boot and bushing. Bent, broken, over-torqued, missing or otherwise damaged pawl assemblies.

Cam Brake
Brake lining wear and brake shoe “rust-jacking.”

Disc Brake
Pad wear, rotor wear.

Coverage Limitations

Product Description

All
Any claim beyond 60 days from date of repair will not be accepted or honored under this warranty program. Products purchased on an incomplete vehicle (glider) are limited to one year, unlimited miles parts only (1/Unl/P).

Front Axles
Tie rod and tie rod ends limited to 3-year/300,000-mile or published vocational coverage, whichever is less. Wheel seals, gaskets and wheel bearings are covered for 1 year/unlimited miles if the wheel end equipment is supplied and assembled by Meritor.

Rear Axles
Pinion and through shaft seals limited to 3-year/300,000-mile or published vocational coverage, whichever is less, if yoke is installed by Meritor. If yoke is not installed by Meritor, then Meritor does not warrant pinion seals. Wheel seals, gaskets and wheel bearings are covered for 1 year/unlimited miles if the wheel end equipment is supplied and assembled by Meritor.

Rear Axles
The Meritor® breather part number A-2297-C-8765 with A-3196-J-1336 hose must be used for eligibility of any potential warranty consideration relating to contamination and/or loss of lube in axles.

Cam Brake
Limited to bracket, brake spider and camshaft structural integrity.

STEELite X30
Wearable life is up to the discard diameter of the drum.

Disc Brake
Warranty coverage for boots, seals, bushings and pins is 2/200/P. Warranty coverage for pads is 1/100/P.

Warranty coverage on vehicles with 1,850 lb-ft engine torque and over may be reduced on individual drivetrain components. Contact your Meritor representative for specific details.

TERMS AND CONDITIONS

(1) What is Covered by this Commercial Warranty?
Meritor Inc. warrants to the owner ("Owner") that the components listed in this publication, which have been installed by an Original Equipment Manufacturer ("OEM") as original equipment in vehicles licensed for on-highway use, will be free from defects in material and workmanship. This warranty coverage begins only after the expiration of the OEM's vehicle warranty for the applicable covered components. Warranty coverage ends at the expiration of the applicable time period from the date of vehicle purchase by the first Owner, or, the applicable mileage limitation, whichever occurs first. Duration of coverage varies by component and vocation as detailed elsewhere in this warranty statement.

Some components are warranted for parts only and the Owner must pay any labor costs associated with the repair or replacement of the component. Other components are warranted for both parts and reasonable labor to repair or replace the subject component. Components (whether new, used or remanufactured) installed as replacements under this warranty are warranted only for the remainder of the original period of time or mileage under the original warranty.

For certain components, coverage requires the use of specific extended drain interval or synthetic lubricants. For further information about lubrication and maintenance, see Meritor publication Maintenance Manual Number I and the applicable Meritor maintenance manual for the product in question. Other conditions and limitations applicable to this warranty are detailed below.

(2) Designation of Vocational Use Required.
To obtain warranty coverage, each Owner must notify Meritor through the OEM new truck and/or trailer dealer of the intended vocational use of the vehicle into which the Meritor components have been incorporated prior to the vehicle in-service date. This notification may be accomplished by registering the vehicle through your OEM new truck and/or trailer dealer or with Meritor directly. Failure to notify Meritor of (I) the intended vocational use of the vehicle or (II) a change in vocational use from that which was originally designated, will result in the application of a one year, unlimited mileage, parts only warranty (1/Unl/P) from the initial in-service date.

A second Owner and each subsequent Owner must also notify Meritor as to the intended vocational use of the vehicle. This notification can be sent directly to Meritor or through the OEM new truck and/or trailer dealer. The duration and mileage coverage of this warranty cannot exceed the coverage extended to the first Owner after his or her initial designation of vocational use.

Coverage under Meritor's warranty requires that the application of products be properly approved pursuant to OEM and Meritor approvals. Refer to TP-9441 for axles, SP-8320 for trailer axles, TP-12126 for drivelines, and/or contact Meritor regarding specific application approval questions on any product line.

(3) What is the Cost of this Warranty?
There is no charge to the Owner for this warranty.

(4) What is not Covered by this Warranty?
This warranty does not cover normal wear and tear; nor does it cover a component that fails, malfunctions or is damaged as a result of (I) improper installation, adjustment, repair or modification (including the use of unauthorized attachments or changes or modification in the vehicle's configuration, usage, or vocation from that which was originally approved by Meritor), (II) accident, natural disaster, abuse, or improper use (including loading beyond the specified maximum vehicle weight or altering engine power settings to exceed the axle and/or driveline capacity), or (III) improper or insufficient maintenance (including deviation from approved lubricants, change intervals, or lube levels). This warranty does not cover any component or part that is not sold by Meritor. For vehicles that operate full or part time outside of the United States and Canada, a one year, unlimited mileage, parts only warranty (1/Unl/P) will apply.

(5) Remedy.
The exclusive remedy under this warranty shall be the repair or replacement of the defective component at Meritor's option. Meritor reserves the right to require that all applicable failed materials are available and/or returned to Meritor for review and evaluation.

(6) Disclaimer of Warranty.
THIS WARRANTY IS EXPRESSLY IN LIEU OF ALL OTHER WARRANTIES OR CONDITIONS, EXPRESSED, IMPLIED OR STATUTORY INCLUDING ANY IMPLIED WARRANTY OF MERCHANTABILITY OR FITNESS FOR PARTICULAR PURPOSE.

(7) Limitation of Remedies.
In no event shall Meritor be liable for special, incidental, indirect, or consequential damages of any kind or under any legal theory, including, but not limited to, towing, downtime, lost productivity, cargo damage, taxes, or any other losses or costs resulting from a defective covered component.

(8) To Obtain Service.
If the Owner discovers within the applicable coverage period a defect in material or workmanship, the Owner must promptly give notice to either Meritor or the dealer from which the vehicle was purchased. To obtain service, the vehicle must be taken to any participating OEM new truck and/or trailer dealer or authorized Meritor service location. The dealer will inspect the vehicle and contact Meritor for an evaluation of the claim. When authorized by Meritor, the dealer will repair or replace during the term of this warranty any defective Meritor component covered by this warranty.

(9) Entire Agreement.
This is the entire agreement between Meritor and the Owner about warranty and no Meritor employee or dealer is authorized to make any additional warranty on behalf of Meritor. This agreement allocates the responsibilities for component failure between Meritor and the Owner.

Vehicle models, brands and names depicted herein are the property of their respective owners, and are not in any way associated with Meritor, Inc., or its affiliates.

MERITOR®

Meritor Heavy Vehicle Systems, LLC
2135 West Maple Road
Troy, Michigan 48084 USA

For more information:
call Ontrac at 866-668-7221
or visit meritor.com

©2017 Meritor, Inc.
Litho in USA, SP-95155
Revised 01-17 (47865/11900)

Fire and Rescue Apparatus

Three (3) Year Material and Workmanship
Meritor Wabco ABS Brake System
Limited Warranty

1. LIMITED WARRANTY

Subject to the limitations and exclusions set forth below, Pierce Manufacturing provides the following warranty to the Buyer:

Coverage:	**The Meritor Wabco ABS brake system shall be covered by Meritor Wabco as indicated in the attached Meritor Wabco warranty coverage description**
Warranty Begins:	**The date of the original purchase invoice (issued when the product ships from the factory).**
Warranty Period Ends After:	**Three (3) Year**
Conditions and Exclusions: **See Also Paragraphs 2 thru 4**	**The exclusions listed in the attached Meritor Wabco warranty description shall apply.**

This limited warranty shall apply only if the product is properly maintained in accordance with Pierce's maintenance instructions and manuals and is used in service which is normal to the particular model. Normal service means service which does not subject the product to stresses or impacts greater than normally result from careful use. If the Buyer discovers a defect or nonconformity, it must notify Pierce in writing within thirty (30) days after the date of discovery, but in any event prior to the expiration of the warranty period. THIS LIMITED WARRANTY MAY NOT BE ASSIGNED OR OTHERWISE TRANSFERRED BY THE BUYER TO ANY SUBSEQUENT USER OR PURCHASER OR TO ANY OTHER PERSON OR ENTITY.

Notwithstanding anything to the contrary herein, Pierce makes no warranty whatsoever as to:

(a) any integral parts, components, attachments or trade accessories of or to the product that are not manufactured by Pierce, including but not limited to engines, transmissions, drivelines, axles, water pumps and generators; with respect to all such parts, components, attachments and accessories, Pierce shall assign to Buyer the applicable warranties, if any, made by the respective manufacturers thereof;

(b) any vehicle, chassis, or component, part, attachment or accessory damaged by misuse, neglect, fire, exposure to severe environmental or chemical conditions, acidic environment, improper maintenance, accident, crash, or force majeure such as natural disaster, lightning, earthquake, windstorm, hail, flood, war or riot;

(c) any vehicle, chassis or component, part, attachment or accessory that has been repaired, altered or assembled in any way by any person or entity other than Pierce which, in the sole judgment of Pierce, adversely affects the performance, stability or purpose for which it was manufactured; or

(d) products or parts which may in the ordinary course wear out and have to be replaced during the warranty period, including, but not limited to, tires, fluids, gaskets and light bulbs. Pierce assumes no responsibility for the assembly of its parts or subassemblies into finishing products or vehicles unless the assembly is performed by Pierce.

The original purchaser may void this warranty in part or in its entirety if the product is repaired or replaced (a) without prior written approval of the Pierce Customer Service Department; or (b) at a facility which has not been approved by Pierce as to technical capability. Any repairs, modifications, alterations or aftermarket parts added after manufacture without the authorization of Pierce may void this warranty.

2. DISCLAIMERS OF WARRANTIES

THE WARRANTY SET FORTH IN PARAGRAPH 1 IS THE SOLE AND EXCLUSIVE WARRANTY GIVEN BY PIERCE. PIERCE HEREBY DISCLAIMS AND EXCLUDES ALL OTHER WARRANTIES, WHETHER EXPRESS, IMPLIED OR STATUTORY, INCLUDING WITHOUT LIMITATION ANY WARRANTY OF MERCHANTABILITY, ANY WARRANTY OF FITNESS FOR A PARTICULAR PURPOSE, AND ANY WARRANTIES ARISING FROM COURSE OF DEALING OR USAGE OF TRADE.

3. BUYER'S EXCLUSIVE REMEDY.

If the product fails to conform to the warranty set forth in paragraph 1 during the warranty period, and such nonconformity is not due to misuse, neglect, accident or improper maintenance, Buyer must notify Pierce within the time period specified in paragraph 1, and shall make the product available for inspection by Pierce or its designated agent. At the request of Pierce, any allegedly defective product shall be returned to Pierce by Buyer for examination and/or repair. Buyer shall be responsible for the cost of such transportation, and for risk of loss of or damage to the product during transportation. Within a reasonable time, Pierce shall repair or replace (at Pierce's option and expense) any nonconforming or defective parts. Repair or replacement shall be made only by a facility approved in advance in writing by Pierce. THIS REMEDY SHALL BE THE EXCLUSIVE AND SOLE REMEDY FOR ANY BREACH OF WARRANTY.

4. EXCLUSION OF CONSEQUENTIAL AND INCIDENTAL DAMAGES.

Notwithstanding anything to the contrary herein or in any agreement between Pierce and Buyer, IN NO EVENT SHALL PIERCE BE LIABLE FOR ANY CONSEQUENTIAL, INCIDENTAL, SPECIAL, INDIRECT, OR PUNITIVE DAMAGES WHATSOEVER, WHETHER ARISING OUT OF BREACH OF CONTRACT, WARRANTY, TORT (INCLUDING NEGLIGENCE AND STRICT LIABILITY) OR OTHER THEORY OF LAW OR EQUITY, WITH RESPECT TO VEHICLES OR OTHER PRODUCTS SOLD BY PIERCE, OR THEIR OPERATION OR FAILURE TO OPERATE, OR ANY DEFECTS THEREIN, OR ANY UNDERTAKINGS, ACTS OR OMISSIONS RELATED THERETO, REGARDLESS OF WHETHER PIERCE HAS BEEN INFORMED OF THE POSSIBILITY OF ANY SUCH DAMAGES. Without limiting the generality of the foregoing, Pierce specifically disclaims any liability for property or personal injury damages, penalties, damages for lost profits or revenues, loss of vehicles or products or any associated equipment, cost of substitute vehicles or products, down-time, delay damages, any other types of economic loss, or for any claims by any third party for any such damages.

Note: Any Surety Bond, if a part of the sale of the vehicle as to which this limited warranty is provided, applies only to this Pierce Basic One Year Limited Warranty for such vehicle, and not to other warranties made by Pierce in a separate document (if any) or to the warranties (if any) made by any manufacturer (other than Pierce) of any part, component, attachment or accessory that is incorporated into or attached to the vehicle.



MERITOR WABCO

Safety Strong. Efficiency Smart.

Warranty
Model Year 2018 Vehicles

SIMPLER IS BETTER

Warranty coverage is essential to protecting your investment. But understanding the full details of your coverage can be challenging. This straightforward approach allows you, our valued customer, to better understand how your specific vehicle applications will be covered in your region. Our component warranty coverage is provided according to vocation/usage categories listed below.

- Linehaul covers high mileage operation (over 60,000 miles/year) on well maintained major highways of concrete or asphalt construction.
- General Service covers moderate mileage operations (less than 60,000 miles/year) on well maintained public roads (less than 10 percent off-road) typically with less than three (3) stops per mile.
- Heavy Service (Vocational) covers vehicles with more than 10 percent off-road OR moderate to frequent starts/stops typically with more than three (3) stops per mile.
- Off-Highway Service covers lower mileage operations. Vehicles are not typically licensed for highway use.

CONTENTS

Linehaul Service 4
General Service 4
Heavy Service 5
Industrial/Off-Highway Service 6
Terms and Conditions 7

How to Read Warranty Coverage (Example)

Number of Years	Mileage (in thousands) Unl=Unlimited	P=Parts Only P&L=Parts & Labor
3	300	P

HEAVY SERVICE (VOCATIONAL) WARRANTY INFORMATION

Heavy Service Vehicles

- Airport Rescue Fire (ARF)
- Airport Shuttle
- Asphalt Truck
- Block Truck
- Bottom Dump Trailer Combination
- Cementing Vehicle
- City Bus
- Commercial Pick-Up
- Concrete Pumper
- Construction Material Hauler
- Crash Fire Rescue (CFR)
- Mixer
- Demolition
- Drill Rig
- Dump
- Emergency Service
- Equipment Hauling
- Flatbed Trailer Hauler
- Flatbed Truck
- Fracturing Truck
- Front Loader
- Geophysical Exploration
- Hopper Trailer Combinations
- Landscaping Truck
- Liquid Waste Hauler
- Log Hauling
- Lowboy
- Michigan Special Gravel Trains
- Michigan Special Log Hauler
- Michigan Special Steel Hauler
- Michigan Special Waste Vehicle
- Municipal Dump
- Newspaper Delivery
- Package Delivery
- Pick-up and Delivery
- Rapid Intervention Vehicle (RIV)
- Rear Loader
- Recycling Truck
- Residential Pick-Up/Waste
- Rigging Truck
- Roll-Off
- Scrap Truck
- Semi-End Dump
- Sewer/Septic Vacuum
- Shuttle Bus
- Side Loader
- Snowplow/Snowblower
- Steel Hauling
- Tanker
- Tank Truck
- Tractors with Pole Trailers
- Tractor/Trailer with Jeeps
- Transfer Dump
- Transfer Vehicle
- Transit Bus
- Trolley
- Utility Truck
- Winch Truck

Heavy Service Typically Is

- On/Off road vocations (10% or more off-road) OR
- Moderate to frequent starts/stops typically more than three (3) stops per mile

Meritor WABCO Components[1]

ABS (Anti-Lock Braking System) Air	3/300/P&L
ABS (Anti-Lock Braking System) Hydraulic	2/200/P&L
Electronic Braking System (EBS)	3/300/P&L
Electronic Stability Control (ESC)	3/300/P&L
Roll Stability Control (RSC)	3/300/P&L
Air Dryers (ALL)	1/100/P&L
Leveling Valves	1/100/P&L
Air Brake Valves	1/100/P&L
Emission Valves (SCR)	2/200/P&L
Clutch Controls	2/200/P&L
Air Compressors (ALL)[2]	1/100/P&L
OnGuard™	3/300/P&L
OnGuardACTIVE™	3/300/P&L
OnLane™ Lane Departure Warning	3/300/P&L
Blind Spot Detection	3/300/P&L
OptiRide™	2/200/P&L
Trailer Roll Stability Support (RSS)	3/300/P&L
Trailer Control Line Filter[3]	1/100/P&L
Trailer ABS Valve[3]	3/300/P&L

[1] WABCO and Meritor WABCO branded components.
[2] WABCO compressors installed on Cummins, Mercedes, and DDC engines are not warranted or serviced by Meritor WABCO. Please contact your respective dealer/distributor of those engines for warranty and servicing.
[3] An extended warranty of 4/400/P will be applied when a Meritor WABCO Trailer Control Line Filter is used in combination with a Meritor WABCO Trailer ABS valve.



TERMS AND CONDITIONS

Coverage Exclusions

Product Description

All

The cost of any repairs, replacements or adjustments to a covered product due to the following: (1) damage to the product or its component parts caused by incorrect use, installation, maintenance or repair, including without limitation (a) improper fit of mating components or brackets, (b) damaged threads, (c) cut, broken, chafed, pinched or otherwise damaged wiring (sensors, harnesses and connectors), (d) damaged sensors from removal when seized in block, or associated with sensor adjustments/ alignments, and (e) damage resulting from the use or installation of non-genuine Meritor WABCO components or materials; (2) damage to the product, its component parts, or diminished product or component part performance due to incorrect operation, deviation from approved conditions or misapplication; (3) any unauthorized disassembly of the product or its component parts including without limitation (a) obliterated, defaced or missing WABCO or Meritor WABCO name plate, serial numbers or label identifying the device as a Meritor WABCO product or WABCO component, (b) changes to sealed adjusting screws, and (c) opening or attempted repair of non-serviceable components; (4) malfunction of the component due to internal contamination out of the vehicle system including without limitation (a) water and other contamination damage that is due to the use of a non-genuine air dryer cartridge or (b) valve failures due to contamination in air system, (5) complaints associated with noise, (6) damage resulting from corrosion (including oxidation of electrical devices and connections).

Air Dryers

Mounting brackets (see vehicle OEM). Desiccant cartridge housing only.

Air System Components

Normal wear items; Gladhand seals, dash valve knobs, valve actuation handles, treadles, pedals.

ABS, Electronic Stability Control (ESC), Roll Stability Control (RSC), OptiRide™, OnGuard™ and OnLane™, collectively "Electronics"

Failure of electronic components due to overvoltage condition, improper grounding, electrostatic discharge (ESD), improper shielding, electromagnetic interference (EMI), or other wiring or installation issues.

Malfunctions and failure codes caused by other electronic subsystem failures (data bus, engine, transmission, dashboard, etc.)

Hydraulic Components

For certain components, brake fluid DOT3 or DOT4 is used as the operating medium. Use of any other fluid will void all warranties associated with that component. For hydraulic braking applications the brake fluid is considered a maintenance item. Maintenance intervals are listed in TB-1367.

Coverage Limitations

Product Description

All

Any claim beyond 60 days from date of repair will not be accepted or honored under this warranty program.

Products purchased on an incomplete vehicle (glider) are limited to one year, 1/Unl/P.

For vehicles that operate full- or part-time outside of the United States and Canada, a 1-Year/Unlimited Miles parts only (1/Unl/P) will apply.

TOOLBOX™ Software

Proper diagnostics of Meritor WABCO Electronics may require the latest version of TOOLBOX™. Additional labor due to use of an outdated version of TOOLBOX™. TOOLBOX™ software, and/or the time to purchase or install latest version of TOOLBOX™ are not covered under product warranty.

TERMS AND CONDITIONS

(1) What is Covered by this Commercial Warranty?
Meritor WABCO Vehicle Control Systems warrants to the owner ("Owner") that the components listed in this publication, which have been installed by an Original Equipment Manufacturer ("OEM") as original equipment will be free from defects in material and workmanship. This warranty coverage begins from the original in-service date to the limits provided and runs concurrently with any warranties provided by OEMs and/or any service contracts that cover the components listed in this publication, if any. If the components listed in this publication are covered by an OEM warranty and/or service contract, then the OEM's warranty and/or service contract shall supersede Meritor WABCO's warranty and Owner shall comply with all OEM's warranty and/or service contract requirements for claims under such OEM's warranty and/or service contract until those agreements expire. Once those agreements expire and provided the Meritor WABCO warranty has not expired under the terms stated above, the Meritor WABCO warranty would be in effect until its expiration date.

Warranty coverage ends at the expiration of the applicable time period from the date of vehicle purchase by the first Owner, or, the applicable mileage limitation, whichever occurs first. Duration of coverage varies by component and vocation as detailed previously in this publication. Some components are warranted for parts only and the Owner must pay any labor costs associated with the repair or replacement of the component. Other components are warranted for both parts and reasonable labor to repair or replace the subject component. Additional diagnostic time due to use of an outdated version of TOOLBOX™, time to purchase or install latest version of TOOLBOX™ are the responsibility of the authorized Meritor WABCO service location and are not covered under product warranty. Components installed as replacements under this warranty are warranted only for the remainder of the original period of time or mileage under the original warranty.

(2) Designation of Vocational Use Required.
To obtain warranty coverage, each Owner must notify Meritor WABCO through the OEM new truck and/or trailer dealer of the intended vocational use of the vehicle into which the Meritor WABCO components have been incorporated prior to the vehicle in-service date. This notification may be accomplished by registering the vehicle through your OEM new truck and/or trailer dealer or with Meritor WABCO directly. Failure to notify Meritor WABCO of (I) the intended vocational use of the vehicle or (II) a change in vocational use from that which was originally designated, will result in the application of a one year, unlimited mileage, parts only warranty (1/Unl/P) from the initial in-service date.

A second Owner and each subsequent Owner must also notify Meritor WABCO as to the intended vocational use of the vehicle. This notification can be sent directly to Meritor WABCO or through the OEM new truck and/or trailer dealer. The duration and mileage coverage of this warranty cannot exceed the coverage extended to the first Owner after his or her initial designation of vocational use.

Coverage under Meritor WABCO's warranty requires that the application of products be properly approved pursuant to OEM and Meritor WABCO, approvals.

(3) What is the Cost of this Warranty?
There is no charge to the Owner for this warranty.

(4) What is not Covered by this Warranty?
In addition to the items listed on page 7, this warranty does not cover normal wear and tear, or service items; nor does it cover a component that fails, malfunctions or is damaged as a result of (a) improper handling, storage, installation, adjustment, repair or modification including the use of unauthorized attachments or changes or modification in the vehicle's configuration, usage, or vocation from that which was originally approved by Meritor WABCO, (b) accident, fire or other casualty, natural disaster, road debris, negligence, misuse, abuse, or improper use (including loading beyond the specified maximum vehicle weight or altering engine power settings to exceed the brake system capacity), or (c) improper or insufficient maintenance (including deviation from maintenance intervals, approved lubricants, or lube levels). This warranty does not cover any component or part that is not sold by Meritor WABCO.

(5) Remedy.
The exclusive remedy under this warranty shall be the repair or replacement of the defective component at Meritor WABCO's option. Meritor WABCO reserves the right to require that all applicable covered components are available and/or returned to Meritor WABCO for review and evaluation.

(6) DISCLAIMER OF WARRANTY.
THIS WARRANTY IS EXPRESSLY IN LIEU OF ALL OTHER WARRANTIES OR CONDITIONS, EXPRESS, IMPLIED OR STATUTORY INCLUDING ANY IMPLIED WARRANTY OF MERCHANTABILITY OR FITNESS FOR PARTICULAR PURPOSE. SOME STATES LIMIT OR DO NOT ALLOW THE DISCLAIMER OF IMPLIED OR OTHER WARRANTIES, SO THE ABOVE LIMITATION OR EXCLUSION MAY NOT APPLY TO THE EXTENT SUCH STATE'S LAW IS APPLICABLE TO THESE TERMS.

(7) LIMITATION OF REMEDIES.
IN NO EVENT SHALL MERITOR WABCO BE LIABLE FOR SPECIAL, INCIDENTAL, INDIRECT, OR CONSEQUENTIAL DAMAGES OF ANY KIND OR UNDER ANY LEGAL THEORY, INCLUDING, BUT NOT LIMITED TO, TOWING, DOWNTIME, LOST PRODUCTIVITY, CARGO DAMAGE, TAXES, LOST PROFITS, COSTS OF PROCUREMENT OF A SUBSTITUTE COMPONENT OR ANY OTHER LOSSES OR COSTS RESULTING FROM A COVERED COMPONENT. SOME STATES DO NOT ALLOW THE EXCLUSION OR LIMITATION OF SPECIAL, INCIDENTAL, INDIRECT OR CONSEQUENTIAL DAMAGES, SO THE ABOVE LIMITATION OR EXCLUSION MAY NOT APPLY TO THE EXTENT SUCH STATE'S LAW IS APPLICABLE TO THESE TERMS.

(8) TIME LIMIT ON COMMENCING LEGAL ACTION.
ANY LEGAL ACTION OR CLAIM ARISING FROM OR RELATED TO THIS WARRANTY, IN CONTRACT OR OTHERWISE, MUST BE COMMENCED WITHIN ONE YEAR FROM THE ACCRUAL OF THAT CAUSE OF ACTION, OR BE BARRED FOREVER.

(9) To Obtain Service.
If the Owner discovers within the applicable coverage period a defect in material or workmanship, the Owner must promptly give notice to either Meritor WABCO or the dealer from which the vehicle was purchased. To obtain service, the vehicle must be taken to any participating OEM new truck and/or trailer dealer or authorized Meritor WABCO service location. The dealer will inspect the vehicle and contact Meritor WABCO for an evaluation of the claim. When authorized by Meritor WABCO, the dealer will repair or replace during the term of this warranty any defective Meritor WABCO component covered by this warranty.

(10) Entire Agreement.
This is the entire agreement between Meritor WABCO and the Owner about warranty and no Meritor, Meritor WABCO employee, or dealer is authorized to make any additional warranty on behalf of Meritor WABCO unless in writing and signed by an authorized representative of Meritor WABCO.

For more information on
Meritor WABCO Warranty, call
our OnTrac Customer Service team
at 866-OnTrac1 (866-668-7221)
or visit meritorwabco.com.

Litho in USA. Revised 06/17.
SP-1375 (47865/11900)
Meritor WABCO Vehicle Control Systems
2135 West Maple Road, Troy, Michigan 48084, USA
Phone: 866-ONTRAC1 (866-668-7221) Fax: 248-435-8002

meritorwabco.com

©2017 Meritor WABCO Vehicle Control Systems
Meritor WABCO Vehicle Control Systems is a
joint venture of Meritor™ and WABCO

Fire and Rescue Apparatus

Ten (10) Year Structural Integrity
Custom Cab
Limited Warranty

1. LIMITED WARRANTY

Subject to the limitations and exclusions set forth below, Pierce Manufacturing provides the following warranty to the Buyer:

Coverage:	**The Pierce Custom Cab shall be free from structural failures caused by defects in material and workmanship**
Warranty Begins:	**The date of the original purchase invoice (issued when the product ships from the factory).**
Warranty Period Ends After:	**Ten (10) Years - or - 100,000 Miles**
Conditions and Exclusions: **See Also Paragraphs 2 thru 4**	**This warranty applies only to the cab tubular support and mounting structures and other structural components of the cab of the vehicle model, as identified in the Pierce specifications for the Fire and Rescue Apparatus.** **This warranty does not apply to damage caused by corrosion.**

This limited warranty shall apply only if the product is properly maintained in accordance with Pierce's maintenance instructions and manuals and is used in service which is normal to the particular model. Normal service means service which does not subject the product to stresses or impacts greater than normally result from careful use. If the Buyer discovers a defect or nonconformity, it must notify Pierce in writing within thirty (30) days after the date of discovery, but in any event prior to the expiration of the warranty period. THIS LIMITED WARRANTY MAY NOT BE ASSIGNED OR OTHERWISE TRANSFERRED BY THE BUYER TO ANY SUBSEQUENT USER OR PURCHASER OR TO ANY OTHER PERSON OR ENTITY.

Notwithstanding anything to the contrary herein, Pierce makes no warranty whatsoever as to:

(a) any integral parts, components, attachments or trade accessories of or to the product that are not manufactured by Pierce, including but not limited to engines, transmissions, drivelines, axles, water pumps and generators; with respect to all such parts, components, attachments and accessories, Pierce shall assign to Buyer the applicable warranties, if any, made by the respective manufacturers thereof;

(b) any vehicle, chassis, or component, part, attachment or accessory damaged by misuse, neglect, fire, exposure to severe environmental or chemical conditions, acidic environment, improper maintenance, accident, crash, or force majeure such as natural disaster, lightning, earthquake, windstorm, hail, flood, war or riot;

(c) any vehicle, chassis or component, part, attachment or accessory that has been repaired, altered or assembled in any way by any person or entity other than Pierce which, in the sole judgment of Pierce, adversely affects the performance, stability or purpose for which it was manufactured; or

(d) products or parts which may in the ordinary course wear out and have to be replaced during the warranty period, including, but not limited to, tires, fluids, gaskets and light bulbs. Pierce assumes no responsibility for the assembly of its parts or subassemblies into finishing products or vehicles unless the assembly is performed by Pierce.

The original purchaser may void this warranty in part or in its entirety if the product is repaired or replaced (a) without prior written approval of the Pierce Customer Service Department; or (b) at a facility which has not been approved by Pierce as to technical capability. Any repairs, modifications, alterations or aftermarket parts added after manufacture without the authorization of Pierce may void this warranty.

2. DISCLAIMERS OF WARRANTIES

THE WARRANTY SET FORTH IN PARAGRAPH 1 IS THE SOLE AND EXCLUSIVE WARRANTY GIVEN BY PIERCE. PIERCE HEREBY DISCLAIMS AND EXCLUDES ALL OTHER WARRANTIES, WHETHER EXPRESS, IMPLIED OR STATUTORY, INCLUDING WITHOUT LIMITATION ANY WARRANTY OF MERCHANTABILITY, ANY WARRANTY OF FITNESS FOR A PARTICULAR PURPOSE, AND ANY WARRANTIES ARISING FROM COURSE OF DEALING OR USAGE OF TRADE.

3. BUYER'S EXCLUSIVE REMEDY.

If the product fails to conform to the warranty set forth in paragraph 1 during the warranty period, and such nonconformity is not due to misuse, neglect, accident or improper maintenance, Buyer must notify Pierce within the time period specified in paragraph 1, and shall make the product available for inspection by Pierce or its designated agent. At the request of Pierce, any allegedly defective product shall be returned to Pierce by Buyer for examination and/or repair. Buyer shall be responsible for the cost of such transportation, and for risk of loss of or damage to the product during transportation. Within a reasonable time, Pierce shall repair or replace (at Pierce's option and expense) any nonconforming or defective parts. Repair or replacement shall be made only by a facility approved in advance in writing by Pierce. THIS REMEDY SHALL BE THE EXCLUSIVE AND SOLE REMEDY FOR ANY BREACH OF WARRANTY.

4. EXCLUSION OF CONSEQUENTIAL AND INCIDENTAL DAMAGES.

Notwithstanding anything to the contrary herein or in any agreement between Pierce and Buyer, IN NO EVENT SHALL PIERCE BE LIABLE FOR ANY CONSEQUENTIAL, INCIDENTAL, SPECIAL, INDIRECT, OR PUNITIVE DAMAGES WHATSOEVER, WHETHER ARISING OUT OF BREACH OF CONTRACT, WARRANTY, TORT (INCLUDING NEGLIGENCE AND STRICT LIABILITY) OR OTHER THEORY OF LAW OR EQUITY, WITH RESPECT TO VEHICLES OR OTHER PRODUCTS SOLD BY PIERCE, OR THEIR OPERATION OR FAILURE TO OPERATE, OR ANY DEFECTS THEREIN, OR ANY UNDERTAKINGS, ACTS OR OMISSIONS RELATED THERETO, REGARDLESS OF WHETHER PIERCE HAS BEEN INFORMED OF THE POSSIBILITY OF ANY SUCH DAMAGES. Without limiting the generality of the foregoing, Pierce specifically disclaims any liability for property or personal injury damages, penalties, damages for lost profits or revenues, loss of vehicles or products or any associated equipment, cost of substitute vehicles or products, down-time, delay damages, any other types of economic loss, or for any claims by any third party for any such damages.

Note: Any Surety Bond, if a part of the sale of the vehicle as to which this limited warranty is provided, applies only to this Pierce Basic One Year Limited Warranty for such vehicle, and not to other warranties made by Pierce in a separate document (if any) or to the warranties (if any) made by any manufacturer (other than Pierce) of any part, component, attachment or accessory that is incorporated into or attached to the vehicle.

Fire and Rescue Apparatus

Ten (10) Year Pro-Rated Paint and Corrosion Cab

Limited Warranty

1. LIMITED WARRANTY

Subject to the limitations and exclusions set forth below, Pierce Manufacturing provides the following warranty to the Buyer:

Coverage:	**Exterior surfaces of the cab painted by Pierce shall be free from blistering, peeling, corrosion or any other adhesion defect caused by defective manufacturing methods or paint material selection.**
Warranty Begins:	**The date of the original purchase invoice (issued when the product ships from the factory).**
Warranty Period Ends After:	**Ten (10) Years**
Conditions and Exclusions: **See Also Paragraphs 2 thru 4**	**This limited warranty is applicable to the vehicle in the following percentage costs of warranty repair, if any:** **Topcoat Durability & Appearance: Gloss, Color Retention & Cracking** **0-72 months 100%** **73-96 months 50%** **97-120 months 25%** **Integrity of Coating System: Adhesion, Blistering/Bubbling** **0-36 months 100%** **37-84 months 50%** **85-120 months 25%** **Corrosion: Dissimilar Metal and Crevice** **0-36 months 100%** **37-48 months 50%** **49-72 months 25%** **73-120 months 10%** **Corrosion Perforation** **0-120 months 100%** **This limited warranty applies only to exterior paint. Paint on the vehicle's interior is warranted only under the Pierce Basic One Year Limited Warranty.** **Items not covered by this warranty include:** **(a) Damage from lack of maintenance and cleaning (proper cleaning and maintenance procedures are detailed in the Pierce operation and maintenance manual).** **(b) UV paint fade.** **(c) Any cab not manufactured by Pierce.**

This limited warranty shall apply only if the product is properly maintained in accordance with Pierce's maintenance instructions and manuals and is used in service which is normal to the particular model. Normal service means service which does not subject the product to stresses or impacts greater than normally result from careful use. If the Buyer discovers a defect or nonconformity, it must notify Pierce in writing within thirty (30) days after the date of discovery, but in any event prior to the expiration of the warranty period. THIS LIMITED WARRANTY MAY NOT BE ASSIGNED OR OTHERWISE TRANSFERRED BY THE BUYER TO ANY SUBSEQUENT USER OR PURCHASER OR TO ANY OTHER PERSON OR ENTITY.

Notwithstanding anything to the contrary herein, Pierce makes no warranty whatsoever as to:

(a) any integral parts, components, attachments or trade accessories of or to the product that are not manufactured by Pierce, including but not limited to engines, transmissions, drivelines, axles, water pumps and generators; with respect to all such parts, components, attachments and accessories, Pierce shall assign to Buyer the applicable warranties, if any, made by the respective manufacturers thereof;

(b) any vehicle, chassis, or component, part, attachment or accessory damaged by misuse, neglect, fire, exposure to severe environmental or chemical conditions, acidic environment, improper maintenance, accident, crash, or force majeure such as natural disaster, lightning, earthquake, windstorm, hail, flood, war or riot;

(c) any vehicle, chassis or component, part, attachment or accessory that has been repaired, altered or assembled in any way by any person or entity other than Pierce which, in the sole judgment of Pierce, adversely affects the performance, stability or purpose for which it was manufactured; or

(d) products or parts which may in the ordinary course wear out and have to be replaced during the warranty period, including, but not limited to, tires, fluids, gaskets and light bulbs. Pierce assumes no responsibility for the assembly of its parts or subassemblies into finishing products or vehicles unless the assembly is performed by Pierce.

The original purchaser may void this warranty in part or in its entirety if the product is repaired or replaced (a) without prior written approval of the Pierce Customer Service Department; or (b) at a facility which has not been approved by Pierce as to technical capability. Any repairs, modifications, alterations or aftermarket parts added after manufacture without the authorization of Pierce may void this warranty.

2. DISCLAIMERS OF WARRANTIES

THE WARRANTY SET FORTH IN PARAGRAPH 1 IS THE SOLE AND EXCLUSIVE WARRANTY GIVEN BY PIERCE. PIERCE HEREBY DISCLAIMS AND EXCLUDES ALL OTHER WARRANTIES, WHETHER EXPRESS, IMPLIED OR STATUTORY, INCLUDING WITHOUT LIMITATION ANY WARRANTY OF MERCHANTABILITY, ANY WARRANTY OF FITNESS FOR A PARTICULAR PURPOSE, AND ANY WARRANTIES ARISING FROM COURSE OF DEALING OR USAGE OF TRADE.

3. BUYER'S EXCLUSIVE REMEDY.

If the product fails to conform to the warranty set forth in paragraph 1 during the warranty period, and such nonconformity is not due to misuse, neglect, accident or improper maintenance, Buyer must notify Pierce within the time period specified in paragraph 1, and shall make the product available for inspection by Pierce or its designated agent. At the request of Pierce, any allegedly defective product shall be returned to Pierce by Buyer for examination and/or repair. Buyer shall be responsible for the cost of such transportation, and for risk of loss of or damage to the product during transportation. Within a reasonable time, Pierce shall repair or replace (at Pierce's option and expense) any nonconforming or defective parts. Repair or replacement shall be made only by a facility approved in advance in writing by Pierce. THIS REMEDY SHALL BE THE EXCLUSIVE AND SOLE REMEDY FOR ANY BREACH OF WARRANTY.

4. EXCLUSION OF CONSEQUENTIAL AND INCIDENTAL DAMAGES.

Notwithstanding anything to the contrary herein or in any agreement between Pierce and Buyer, IN NO EVENT SHALL PIERCE BE LIABLE FOR ANY CONSEQUENTIAL, INCIDENTAL, SPECIAL, INDIRECT, OR PUNITIVE DAMAGES WHATSOEVER, WHETHER ARISING OUT OF BREACH OF CONTRACT, WARRANTY, TORT (INCLUDING NEGLIGENCE AND STRICT LIABILITY) OR OTHER THEORY OF LAW OR EQUITY, WITH RESPECT TO VEHICLES OR OTHER PRODUCTS SOLD BY PIERCE, OR THEIR OPERATION OR FAILURE TO OPERATE, OR ANY DEFECTS THEREIN, OR ANY UNDERTAKINGS, ACTS OR OMISSIONS RELATED THERETO, REGARDLESS OF WHETHER PIERCE HAS BEEN INFORMED OF THE POSSIBILITY OF ANY SUCH DAMAGES. Without limiting the generality of the foregoing, Pierce specifically disclaims any liability for property or personal injury damages, penalties, damages for lost profits or revenues, loss of vehicles or products or any associated equipment, cost of substitute vehicles or products, down-time, delay damages, any other types of economic loss, or for any claims by any third party for any such damages.

Note: Any Surety Bond, if a part of the sale of the vehicle as to which this limited warranty is provided, applies only to this Pierce Basic One Year Limited Warranty for such vehicle, and not to other warranties made by Pierce in a separate document (if any) or to the warranties (if any) made by any manufacturer (other than Pierce) of any part, component, attachment or accessory that is incorporated into or attached to the vehicle.

Fire and Rescue Apparatus

Five (5) Year Material and Workmanship
Command Zone Electronics
Limited Warranty

1. LIMITED WARRANTY

Subject to the limitations and exclusions set forth below, Pierce Manufacturing provides the following warranty to the Buyer:

Coverage:	**Command Zone control modules shall be free from failures caused by defects in material and workmanship**
Warranty Begins:	**The date of the original purchase invoice (issued when the product ships from the factory).**
Warranty Period Ends After:	**Five (5) Years**
Conditions and Exclusions: **See Also Paragraphs 2 thru 4**	**This limited warranty applies to all of the control modules for the Command Zone system, including the full color graphic displays. Related wire harnesses, cables and connectors are not covered under this limited warranty and are instead covered under the Pierce One Year Basic Apparatus Limited Warranty.**

This limited warranty shall apply only if the product is properly maintained in accordance with Pierce's maintenance instructions and manuals and is used in service which is normal to the particular model. Normal service means service which does not subject the product to stresses or impacts greater than normally result from careful use. If the Buyer discovers a defect or nonconformity, it must notify Pierce in writing within thirty (30) days after the date of discovery, but in any event prior to the expiration of the warranty period. THIS LIMITED WARRANTY MAY NOT BE ASSIGNED OR OTHERWISE TRANSFERRED BY THE BUYER TO ANY SUBSEQUENT USER OR PURCHASER OR TO ANY OTHER PERSON OR ENTITY.

Notwithstanding anything to the contrary herein, Pierce makes no warranty whatsoever as to:

(a) any integral parts, components, attachments or trade accessories of or to the product that are not manufactured by Pierce, including but not limited to engines, transmissions, drivelines, axles, water pumps and generators; with respect to all such parts, components, attachments and accessories, Pierce shall assign to Buyer the applicable warranties, if any, made by the respective manufacturers thereof;

(b) any vehicle, chassis, or component, part, attachment or accessory damaged by misuse, neglect, fire, exposure to severe environmental or chemical conditions, acidic environment, improper maintenance, accident, crash, or force majeure such as natural disaster, lightning, earthquake, windstorm, hail, flood, war or riot;

(c) any vehicle, chassis or component, part, attachment or accessory that has been repaired, altered or assembled in any way by any person or entity other than Pierce which, in the sole judgment of Pierce, adversely affects the performance, stability or purpose for which it was manufactured; or

(d) products or parts which may in the ordinary course wear out and have to be replaced during the warranty period, including, but not limited to, tires, fluids, gaskets and light bulbs. Pierce assumes no responsibility for the assembly of its parts or subassemblies into finishing products or vehicles unless the assembly is performed by Pierce.

The original purchaser may void this warranty in part or in its entirety if the product is repaired or replaced (a) without prior written approval of the Pierce Customer Service Department; or (b) at a facility which has not been approved by Pierce as to technical capability. Any repairs, modifications, alterations or aftermarket parts added after manufacture without the authorization of Pierce may void this warranty.

2. DISCLAIMERS OF WARRANTIES

THE WARRANTY SET FORTH IN PARAGRAPH 1 IS THE SOLE AND EXCLUSIVE WARRANTY GIVEN BY PIERCE. PIERCE HEREBY DISCLAIMS AND EXCLUDES ALL OTHER WARRANTIES, WHETHER EXPRESS, IMPLIED OR STATUTORY, INCLUDING WITHOUT LIMITATION ANY WARRANTY OF MERCHANTABILITY, ANY WARRANTY OF FITNESS FOR A PARTICULAR PURPOSE, AND ANY WARRANTIES ARISING FROM COURSE OF DEALING OR USAGE OF TRADE.

3. BUYER'S EXCLUSIVE REMEDY.

If the product fails to conform to the warranty set forth in paragraph 1 during the warranty period, and such nonconformity is not due to misuse, neglect, accident or improper maintenance, Buyer must notify Pierce within the time period specified in paragraph 1, and shall make the product available for inspection by Pierce or its designated agent. At the request of Pierce, any allegedly defective product shall be returned to Pierce by Buyer for examination and/or repair. Buyer shall be responsible for the cost of such transportation, and for risk of loss of or damage to the product during transportation. Within a reasonable time, Pierce shall repair or replace (at Pierce's option and expense) any nonconforming or defective parts. Repair or replacement shall be made only by a facility approved in advance in writing by Pierce. THIS REMEDY SHALL BE THE EXCLUSIVE AND SOLE REMEDY FOR ANY BREACH OF WARRANTY.

4. EXCLUSION OF CONSEQUENTIAL AND INCIDENTAL DAMAGES.

Notwithstanding anything to the contrary herein or in any agreement between Pierce and Buyer, IN NO EVENT SHALL PIERCE BE LIABLE FOR ANY CONSEQUENTIAL, INCIDENTAL, SPECIAL, INDIRECT, OR PUNITIVE DAMAGES WHATSOEVER, WHETHER ARISING OUT OF BREACH OF CONTRACT, WARRANTY, TORT (INCLUDING NEGLIGENCE AND STRICT LIABILITY) OR OTHER THEORY OF LAW OR EQUITY, WITH RESPECT TO VEHICLES OR OTHER PRODUCTS SOLD BY PIERCE, OR THEIR OPERATION OR FAILURE TO OPERATE, OR ANY DEFECTS THEREIN, OR ANY UNDERTAKINGS, ACTS OR OMISSIONS RELATED THERETO, REGARDLESS OF WHETHER PIERCE HAS BEEN INFORMED OF THE POSSIBILITY OF ANY SUCH DAMAGES. Without limiting the generality of the foregoing, Pierce specifically disclaims any liability for property or personal injury damages, penalties, damages for lost profits or revenues, loss of vehicles or products or any associated equipment, cost of substitute vehicles or products, down-time, delay damages, any other types of economic loss, or for any claims by any third party for any such damages.

Note: Any Surety Bond, if a part of the sale of the vehicle as to which this limited warranty is provided, applies only to this Pierce Basic One Year Limited Warranty for such vehicle, and not to other warranties made by Pierce in a separate document (if any) or to the warranties (if any) made by any manufacturer (other than Pierce) of any part, component, attachment or accessory that is incorporated into or attached to the vehicle.

Fire and Rescue Apparatus

54 Months Material and Workmanship

Camera System

Limited Warranty

1. LIMITED WARRANTY

Subject to the limitations and exclusions set forth below, Pierce Manufacturing provides the following warranty to the Buyer:

Coverage:	**This limited warranty covers repairs to correct any defect related to materials or workmanship of the Sharpvision camera system installed on the apparatus occuring during the warranty period.**
Warranty Begins:	**The date of delivery.**
Warranty Period Ends After:	**Fifty - Four (54) months**
Conditions and Exclusions: **See Also Paragraphs 2 thru 4**	**This limited warranty does not apply to related wire harnesses, cables, and connectors, which are covered by the Pierce one (1) year basic apparatus limited warranty.**

This limited warranty shall apply only if the product is properly maintained in accordance with Pierce's maintenance instructions and manuals and is used in service which is normal to the particular model. Normal service means service which does not subject the product to stresses or impacts greater than normally result from careful use. If the Buyer discovers a defect or nonconformity, it must notify Pierce in writing within thirty (30) days after the date of discovery, but in any event prior to the expiration of the warranty period. THIS LIMITED WARRANTY MAY NOT BE ASSIGNED OR OTHERWISE TRANSFERRED BY THE BUYER TO ANY SUBSEQUENT USER OR PURCHASER OR TO ANY OTHER PERSON OR ENTITY.

Notwithstanding anything to the contrary herein, Pierce makes no warranty whatsoever as to:

(a) any integral parts, components, attachments or trade accessories of or to the product that are not manufactured by Pierce, including but not limited to engines, transmissions, drivelines, axles, water pumps and generators; with respect to all such parts, components, attachments and accessories, Pierce shall assign to Buyer the applicable warranties, if any, made by the respective manufacturers thereof;

(b) any vehicle, chassis, or component, part, attachment or accessory damaged by misuse, neglect, fire, exposure to severe environmental or chemical conditions, acidic environment, improper maintenance, accident, crash, or force majeure such as natural disaster, lightning, earthquake, windstorm, hail, flood, war or riot;

(c) any vehicle, chassis or component, part, attachment or accessory that has been repaired, altered or assembled in any way by any person or entity other than Pierce which, in the sole judgment of Pierce, adversely affects the performance, stability or purpose for which it was manufactured; or

(d) products or parts which may in the ordinary course wear out and have to be replaced during the warranty period, including, but not limited to, tires, fluids, gaskets and light bulbs. Pierce assumes no responsibility for the assembly of its parts or subassemblies into finishing products or vehicles unless the assembly is performed by Pierce.

The original purchaser may void this warranty in part or in its entirety if the product is repaired or replaced (a) without prior written approval of the Pierce Customer Service Department; or (b) at a facility which has not been approved by Pierce as to technical capability. Any repairs, modifications, alterations or aftermarket parts added after manufacture without the authorization of Pierce may void this warranty.

2. DISCLAIMERS OF WARRANTIES

THE WARRANTY SET FORTH IN PARAGRAPH 1 IS THE SOLE AND EXCLUSIVE WARRANTY GIVEN BY PIERCE. PIERCE HEREBY DISCLAIMS AND EXCLUDES ALL OTHER WARRANTIES, WHETHER EXPRESS, IMPLIED OR STATUTORY, INCLUDING WITHOUT LIMITATION ANY WARRANTY OF MERCHANTABILITY, ANY WARRANTY OF FITNESS FOR A PARTICULAR PURPOSE, AND ANY WARRANTIES ARISING FROM COURSE OF DEALING OR USAGE OF TRADE.

3. BUYER'S EXCLUSIVE REMEDY.

If the product fails to conform to the warranty set forth in paragraph 1 during the warranty period, and such nonconformity is not due to misuse, neglect, accident or improper maintenance, Buyer must notify Pierce within the time period specified in paragraph 1, and shall make the product available for inspection by Pierce or its designated agent. At the request of Pierce, any allegedly defective product shall be returned to Pierce by Buyer for examination and/or repair. Buyer shall be responsible for the cost of such transportation, and for risk of loss of or damage to the product during transportation. Within a reasonable time, Pierce shall repair or replace (at Pierce's option and expense) any nonconforming or defective parts. Repair or replacement shall be made only by a facility approved in advance in writing by Pierce. THIS REMEDY SHALL BE THE EXCLUSIVE AND SOLE REMEDY FOR ANY BREACH OF WARRANTY.

4. EXCLUSION OF CONSEQUENTIAL AND INCIDENTAL DAMAGES.

Notwithstanding anything to the contrary herein or in any agreement between Pierce and Buyer, IN NO EVENT SHALL PIERCE BE LIABLE FOR ANY CONSEQUENTIAL, INCIDENTAL, SPECIAL, INDIRECT, OR PUNITIVE DAMAGES WHATSOEVER, WHETHER ARISING OUT OF BREACH OF CONTRACT, WARRANTY, TORT (INCLUDING NEGLIGENCE AND STRICT LIABILITY) OR OTHER THEORY OF LAW OR EQUITY, WITH RESPECT TO VEHICLES OR OTHER PRODUCTS SOLD BY PIERCE, OR THEIR OPERATION OR FAILURE TO OPERATE, OR ANY DEFECTS THEREIN, OR ANY UNDERTAKINGS, ACTS OR OMISSIONS RELATED THERETO, REGARDLESS OF WHETHER PIERCE HAS BEEN INFORMED OF THE POSSIBILITY OF ANY SUCH DAMAGES. Without limiting the generality of the foregoing, Pierce specifically disclaims any liability for property or personal injury damages, penalties, damages for lost profits or revenues, loss of vehicles or products or any associated equipment, cost of substitute vehicles or products, down-time, delay damages, any other types of economic loss, or for any claims by any third party for any such damages.

Note: Any Surety Bond, if a part of the sale of the vehicle as to which this limited warranty is provided, applies only to this Pierce Basic One Year Limited Warranty for such vehicle, and not to other warranties made by Pierce in a separate document (if any) or to the warranties (if any) made by any manufacturer (other than Pierce) of any part, component, attachment or accessory that is incorporated into or attached to the vehicle.

Fire and Rescue Apparatus

Ten (10) Year Material and Workmanship
Pierce 12V LED Strip Light

Limited Warranty

1. LIMITED WARRANTY

Subject to the limitations and exclusions set forth below, Pierce Manufacturing provides the following warranty to the Buyer:

Coverage:	**This limited warranty covers repairs to correct any defect related to materials or workmanship of the Pierce 12V LED strip lights installed on the apparatus occuring during the warranty period.**
Warranty Begins:	**The date of the original purchase invoice (issued when the product ships from the factory).**
Warranty Period Ends After:	**Ten (10) Year**
Conditions and Exclusions: **See Also Paragraphs 2 thru 4**	**This limited warranty does not apply to related wire harnesses, cables, and connectors, which are covered by the Pierce one (1) year basic apparatus limited warranty.**

This limited warranty shall apply only if the product is properly maintained in accordance with Pierce's maintenance instructions and manuals and is used in service which is normal to the particular model. Normal service means service which does not subject the product to stresses or impacts greater than normally result from careful use. If the Buyer discovers a defect or nonconformity, it must notify Pierce in writing within thirty (30) days after the date of discovery, but in any event prior to the expiration of the warranty period. THIS LIMITED WARRANTY MAY NOT BE ASSIGNED OR OTHERWISE TRANSFERRED BY THE BUYER TO ANY SUBSEQUENT USER OR PURCHASER OR TO ANY OTHER PERSON OR ENTITY.

Notwithstanding anything to the contrary herein, Pierce makes no warranty whatsoever as to:

(a) any integral parts, components, attachments or trade accessories of or to the product that are not manufactured by Pierce, including but not limited to engines, transmissions, drivelines, axles, water pumps and generators; with respect to all such parts, components, attachments and accessories, Pierce shall assign to Buyer the applicable warranties, if any, made by the respective manufacturers thereof;

(b) any vehicle, chassis, or component, part, attachment or accessory damaged by misuse, neglect, fire, exposure to severe environmental or chemical conditions, acidic environment, improper maintenance, accident, crash, or force majeure such as natural disaster, lightning, earthquake, windstorm, hail, flood, war or riot;

(c) any vehicle, chassis or component, part, attachment or accessory that has been repaired, altered or assembled in any way by any person or entity other than Pierce which, in the sole judgment of Pierce, adversely affects the performance, stability or purpose for which it was manufactured; or

(d) products or parts which may in the ordinary course wear out and have to be replaced during the warranty period, including, but not limited to, tires, fluids, gaskets and light bulbs. Pierce assumes no responsibility for the assembly of its parts or subassemblies into finishing products or vehicles unless the assembly is performed by Pierce.

The original purchaser may void this warranty in part or in its entirety if the product is repaired or replaced (a) without prior written approval of the Pierce Customer Service Department; or (b) at a facility which has not been approved by Pierce as to technical capability. Any repairs, modifications, alterations or aftermarket parts added after manufacture without the authorization of Pierce may void this warranty.

2. DISCLAIMERS OF WARRANTIES

THE WARRANTY SET FORTH IN PARAGRAPH 1 IS THE SOLE AND EXCLUSIVE WARRANTY GIVEN BY PIERCE. PIERCE HEREBY DISCLAIMS AND EXCLUDES ALL OTHER WARRANTIES, WHETHER EXPRESS, IMPLIED OR STATUTORY, INCLUDING WITHOUT LIMITATION ANY WARRANTY OF MERCHANTABILITY, ANY WARRANTY OF FITNESS FOR A PARTICULAR PURPOSE, AND ANY WARRANTIES ARISING FROM COURSE OF DEALING OR USAGE OF TRADE.

3. BUYER'S EXCLUSIVE REMEDY.

If the product fails to conform to the warranty set forth in paragraph 1 during the warranty period, and such nonconformity is not due to misuse, neglect, accident or improper maintenance, Buyer must notify Pierce within the time period specified in paragraph 1, and shall make the product available for inspection by Pierce or its designated agent. At the request of Pierce, any allegedly defective product shall be returned to Pierce by Buyer for examination and/or repair. Buyer shall be responsible for the cost of such transportation, and for risk of loss of or damage to the product during transportation. Within a reasonable time, Pierce shall repair or replace (at Pierce's option and expense) any nonconforming or defective parts. Repair or replacement shall be made only by a facility approved in advance in writing by Pierce. THIS REMEDY SHALL BE THE EXCLUSIVE AND SOLE REMEDY FOR ANY BREACH OF WARRANTY.

4. EXCLUSION OF CONSEQUENTIAL AND INCIDENTAL DAMAGES.

Notwithstanding anything to the contrary herein or in any agreement between Pierce and Buyer, IN NO EVENT SHALL PIERCE BE LIABLE FOR ANY CONSEQUENTIAL, INCIDENTAL, SPECIAL, INDIRECT, OR PUNITIVE DAMAGES WHATSOEVER, WHETHER ARISING OUT OF BREACH OF CONTRACT, WARRANTY, TORT (INCLUDING NEGLIGENCE AND STRICT LIABILITY) OR OTHER THEORY OF LAW OR EQUITY, WITH RESPECT TO VEHICLES OR OTHER PRODUCTS SOLD BY PIERCE, OR THEIR OPERATION OR FAILURE TO OPERATE, OR ANY DEFECTS THEREIN, OR ANY UNDERTAKINGS, ACTS OR OMISSIONS RELATED THERETO, REGARDLESS OF WHETHER PIERCE HAS BEEN INFORMED OF THE POSSIBILITY OF ANY SUCH DAMAGES. Without limiting the generality of the foregoing, Pierce specifically disclaims any liability for property or personal injury damages, penalties, damages for lost profits or revenues, loss of vehicles or products or any associated equipment, cost of substitute vehicles or products, down-time, delay damages, any other types of economic loss, or for any claims by any third party for any such damages.

Note: Any Surety Bond, if a part of the sale of the vehicle as to which this limited warranty is provided, applies only to this Pierce Basic One Year Limited Warranty for such vehicle, and not to other warranties made by Pierce in a separate document (if any) or to the warranties (if any) made by any manufacturer (other than Pierce) of any part, component, attachment or accessory that is incorporated into or attached to the vehicle.

NEW PRODUCT WARRANTY

PARTICIPATING OEM SALES
DISTRIBUTOR SALES

LIMITED WARRANTY ON NEW ALLISON AUTOMATIC TRANSMISSIONS USED IN EMERGENCY VEHICLE APPLICATIONS

Allison Transmission will provide for repairs or replacement, at its option, during the warranty period of each new Allison transmission listed below that is installed in an Emergency Vehicle in accordance with the following terms, conditions, and limitations.

WHAT IS COVERED

- **WARRANTY APPLIES —** This warranty is for new Allison transmission models listed below installed in an Emergency Vehicle and is provided to the original and any subsequent owner(s) of the vehicle during the warranty period.
- **REPAIRS COVERED —** The warranty covers repairs or replacement, at Allison Transmission's option, to correct any transmission malfunction resulting from defects in material or workmanship occurring during the warranty period. Needed repairs or replacements will be performed using the method Allison Transmission determines most appropriate under the circumstances.
- **TOWING —** Towing is covered to the nearest Allison Transmission Distributor or authorized Dealer only when necessary to prevent further damage to your transmission.
- **PAYMENT TERMS —** Warranty repairs, including parts and labor, will be covered per the schedule shown in the chart contained in section "APPLICABLE MODELS, WARRANTY LIMITATIONS, AND ADJUSTMENT SCHEDULE."
- **OBTAINING REPAIRS —** To obtain warranty repairs, take the vehicle to any Allison Transmission Distributor or authorized Dealer within a reasonable amount of time and request the needed repairs. A reasonable amount of time must be allowed for the Distributor or Dealer to perform necessary repairs.
- **TRANSMISSION REMOVAL AND REINSTALLATION —** Labor costs for the removal and re-installation of the transmission, when necessary to make a warranty repair, are covered by this warranty.
- **WARRANTY PERIOD —** The warranty period for all coverages shall begin on the date the transmission is delivered to the first retail purchaser, with the following exception:

  Demonstration Service - A transmission in a new truck or bus may be demonstrated to a total of 5000 miles (8000 kilometers). If the vehicle is within this limit when sold to a retail purchaser, the warranty start date is the date of purchase. Normal warranty services are applicable to the demonstrating Dealer. Should the truck or bus be sold to a retail purchaser after these limits are reached, the warranty period will begin on the date the vehicle was first placed in demonstration service and the purchaser will be entitled to the remaining warranty.

APPLICABLE MODELS, WARRANTY LIMITATIONS, AND ADJUSTMENT SCHEDULE

APPLICABLE MODELS	WARRANTY LIMITATIONS (Whichever occurs first)		ADJUSTMENT CHARGE TO BE PAID BY THE CUSTOMER	
	Months	Transmission Miles Or Kilometers	Parts	Labor
MT, MD 3000, 3200, 3500, 3700	0–24	No Limit	No Charge	No Charge
HT with Hydraulic Controls	0–24	No Limit	No Charge	No Charge
AT, 1000 Series™, 2000 Series™, 2400 Series™	0–36	No Limit	No Charge	No Charge
HT with Electronic Controls	0–60	No Limit	No Charge	No Charge
HD 1000 EVS, 2100 EVS, 2200 EVS 2350 EVS, 2500 EVS, 2550 EVS, 3000 EVS, 3500 EVS, 4000, 4000 EVS, 4500, 4500 EVS, 4700, 4700 EVS, 4800, 4800 EVS	0–60	No Limit	No Charge	No Charge

WHAT IS NOT COVERED

- **DAMAGE DUE TO ACCIDENT, MISUSE, or ALTERATION —** Defects and damage caused as the result of any of the following are not covered:
  - — Flood, collision, fire, theft, freezing, vandalism, riot, explosion, or objects striking the vehicle;
  - — Misuse of the vehicle;
  - — Installation into unapproved applications and installations;
  - — Alterations or modification of the transmission or the vehicle, and
  - — Damage resulting from improper storage (refer to long-term storage procedure outlined in the applicable Allison Service Manual)
  - — Anything other than defects in Allison Transmission material or workmanship

  NOTE: This warranty is void on transmissions used in vehicles currently or previously titled as salvaged, scrapped, junked, or totaled.
- **CHASSIS, BODY, and COMPONENTS —** The chassis and body company (assemblers) and other component and equipment manufacturers are solely responsible for warranties on the chassis, body, component(s), and equipment they provide. Any transmission repair caused by an alteration(s) made to the Allison transmission or the vehicle which allows the transmission to be installed or operated outside of the limits defined in the appropriate Allison Installation Guideline is solely the responsibility of the entity making the alteration(s).
- **DAMAGE CAUSED by LACK of MAINTENANCE or by the USE of TRANSMISSION FLUIDS NOT RECOMMENDED in the OPERATOR'S MANUAL —** Defects and damage caused by any of the following are not covered:
  - — Failure to follow the recommendations of the maintenance schedule intervals applicable to the transmission;
  - — Failure to use transmission fluids or maintain transmission fluid levels recommended in the Operator's Manual.
- **MAINTENANCE —** Normal maintenance (such as replacement of filters, screens, and transmission fluid) is not covered and is the owner's responsibility.
- **REPAIRS by UNAUTHORIZED DEALERS —** Defects and damage caused by a service outlet that is not an authorized Allison Transmission Distributor or Dealer are not covered.
- **USE of OTHER THAN GENUINE ALLISON TRANSMISSION PARTS —** Defects and damage caused by the use of parts that are not genuine Allison Transmission parts are not covered.
- **EXTRA EXPENSES —** Economic loss and extra expenses are not covered. Examples include but are not limited to: loss of vehicle use; inconvenience; storage; payment for loss of time or pay; vehicle rental expense; lodging; meals; or other travel costs.
- **"DENIED PARTY" OWNERSHIP —** Warranty repair parts and labor costs are not reimbursed to any participating or non-participating OEMs, dealers or distributors who perform warranty work for, or on behalf of, end users identified by the United States as being a "denied party" or who are citizens of sanctioned or embargoed countries as defined by the U.S. Department of Treasury Office of Foreign Assets Control. Furthermore, warranty reimbursements are not guaranteed if the reimbursement would be contrary to any United States export control laws or regulations as defined by the U.S. Department of Commerce, the U.S. Department of State, or the U.S. Department of Treasury.

OTHER TERMS APPLICABLE TO CONSUMERS AS DEFINED by the MAGNUSON-MOSS WARRANTY ACT

This warranty gives you specific legal rights and you may also have other rights which vary from state to state.

Allison Transmission does not authorize any person to create for it any other obligation or liability in connection with these transmissions. **ANY IMPLIED WARRANTY OF MERCHANTABILITY OR FITNESS FOR A PARTICULAR PURPOSE APPLICABLE TO THESE TRANSMISSIONS IS LIMITED IN DURATION TO THE DURATION OF THIS WRITTEN WARRANTY. PERFORMANCE OF REPAIRS AND NEEDED ADJUSTMENTS IS THE EXCLUSIVE REMEDY UNDER THIS WRITTEN WARRANTY OR ANY IMPLIED WARRANTY. ALLISON TRANSMISSION SHALL NOT BE LIABLE FOR INCIDENTAL OR CONSEQUENTIAL DAMAGES (SUCH AS, BUT NOT LIMITED TO, LOST WAGES OR VEHICLE RENTAL EXPENSES) RESULTING FROM BREACH OF THIS WRITTEN WARRANTY OR ANY IMPLIED WARRANTY.****

** Some states do not allow limitations on how long an implied warranty will last or the exclusion or limitation of incidental or consequential damages, so the above limitations or exclusions may not apply to you.

OTHER TERMS APPLICABLE TO OTHER END-USERS

THIS WARRANTY IS THE ONLY WARRANTY APPLICABLE TO THE ALLISON TRANSMISSION MODELS LISTED ABOVE AND IS EXPRESSLY IN LIEU OF ANY OTHER WARRANTIES, EXPRESS OR IMPLIED, INCLUDING ANY IMPLIED WARRANTY OF MERCHANTABILITY OR FITNESS FOR A PARTICULAR PURPOSE. ALLISON TRANSMISSION DOES NOT AUTHORIZE ANY PERSON TO CREATE FOR IT ANY OTHER OBLIGATION OR LIABILITY IN CONNECTION WITH SUCH TRANSMISSIONS. ALLISON TRANSMISSION SHALL NOT BE LIABLE FOR INCIDENTAL OR CONSEQUENTIAL DAMAGES RESULTING FROM BREACH OF THIS WARRANTY OR ANY IMPLIED WARRANTY.

QUESTIONS

If you have any questions regarding this warranty or the performance of warranty obligations, you may contact any Allison Transmission Distributor or Dealer or write to:

Allison Transmission, Inc.
P.O. Box 894
Indianapolis, IN 46206-0894
Attention: Warranty Administration PF-9

Form SE0616EN (201009)

Fire and Rescue Apparatus

Five (5) Year Material and Workmanship - Transmission Oil Cooler
Three (3) Year Collateral Damage Coverage

Limited Warranty

1. LIMITED WARRANTY

Subject to the limitations and exclusions set forth below, Pierce Manufacturing provides the following warranty to the Buyer:

Coverage:	**The transmission cooler shall be free from component or structural failures caused by defects in material and/or workmanship. Collateral damage up to $10,000 per occurrence is available for the first three (3) years.**
Warranty Begins:	**The date of delivery to the first retail purchaser.**
Warranty Period Ends After:	**Five (5) Years on Oil Cooler and three (3) years on collateral damage coverage**
Conditions and Exclusions: **See Also Paragraphs 2 thru 4**	**This warranty does not cover repair due to accidents, misuse, and excessive vibration, flying debris, storage damage (freezing), negligence or modification. This warranty is void if any modification or repairs are performed without authorization. This also voids any future warranty.** **This warranty does not cover cost of maintenance or repairs due to lack of required maintenance services as recommended. Performance of the required maintenance and use of proper fluids are the responsibility of the owner.** **Towing is covered to the nearest distributor or authorized dealer only when necessary to prevent further damage to your transmission.** **Labor costs for the removal and reinstallation of goods may be covered when necessary to make repairs. Please contact your OEM for authorization.** **Replacement of cooler during the warranty period is limited to 100% of reasonable labor costs up to a maximum of $700 to remove, replace, or repair the oil cooler.**

This limited warranty shall apply only if the product is properly maintained in accordance with Pierce's maintenance instructions and manuals and is used in service which is normal to the particular model. Normal service means service which does not subject the product to stresses or impacts greater than normally result from careful use. If the Buyer discovers a defect or nonconformity, it must notify Pierce in writing within thirty (30) days after the date of discovery, but in any event prior to the expiration of the warranty period. THIS LIMITED WARRANTY MAY NOT BE ASSIGNED OR OTHERWISE TRANSFERRED BY THE BUYER TO ANY SUBSEQUENT USER OR PURCHASER OR TO ANY OTHER PERSON OR ENTITY.

Notwithstanding anything to the contrary herein, Pierce makes no warranty whatsoever as to:

(a) any integral parts, components, attachments or trade accessories of or to the product that are not manufactured by Pierce, including but not limited to engines, transmissions, drivelines, axles, water pumps and generators; with respect to all such parts, components, attachments and accessories, Pierce shall assign to Buyer the applicable warranties, if any, made by the respective manufacturers thereof;

(b) any vehicle, chassis, or component, part, attachment or accessory damaged by misuse, neglect, fire, exposure to severe environmental or chemical conditions, acidic environment, improper maintenance, accident, crash, or force majeure such as natural disaster, lightning, earthquake, windstorm, hail, flood, war or riot;

(c) any vehicle, chassis or component, part, attachment or accessory that has been repaired, altered or assembled in any way by any person or entity other than Pierce which, in the sole judgment of Pierce, adversely affects the performance, stability or purpose for which it was manufactured; or

(d) products or parts which may in the ordinary course wear out and have to be replaced during the warranty period, including, but not limited to, tires, fluids, gaskets and light bulbs. Pierce assumes no responsibility for the assembly of its parts or subassemblies into finishing products or vehicles unless the assembly is performed by Pierce.

The original purchaser may void this warranty in part or in its entirety if the product is repaired or replaced (a) without prior written approval of the Pierce Customer Service Department; or (b) at a facility which has not been approved by Pierce as to technical capability. Any repairs, modifications, alterations or aftermarket parts added after manufacture without the authorization of Pierce may void this warranty.

2. DISCLAIMERS OF WARRANTIES

THE WARRANTY SET FORTH IN PARAGRAPH 1 IS THE SOLE AND EXCLUSIVE WARRANTY GIVEN BY PIERCE. PIERCE HEREBY DISCLAIMS AND EXCLUDES ALL OTHER WARRANTIES, WHETHER EXPRESS, IMPLIED OR STATUTORY, INCLUDING WITHOUT LIMITATION ANY WARRANTY OF MERCHANTABILITY, ANY WARRANTY OF FITNESS FOR A PARTICULAR PURPOSE, AND ANY WARRANTIES ARISING FROM COURSE OF DEALING OR USAGE OF TRADE.

3. BUYER'S EXCLUSIVE REMEDY.

If the product fails to conform to the warranty set forth in paragraph 1 during the warranty period, and such nonconformity is not due to misuse, neglect, accident or improper maintenance, Buyer must notify Pierce within the time period specified in paragraph 1, and shall make the product available for inspection by Pierce or its designated agent. At the request of Pierce, any allegedly defective product shall be returned to Pierce by Buyer for examination and/or repair. Buyer shall be responsible for the cost of such transportation, and for risk of loss of or damage to the product during transportation. Within a reasonable time, Pierce shall repair or replace (at Pierce's option and expense) any nonconforming or defective parts. Repair or replacement shall be made only by a facility approved in advance in writing by Pierce. THIS REMEDY SHALL BE THE EXCLUSIVE AND SOLE REMEDY FOR ANY BREACH OF WARRANTY.

4. EXCLUSION OF CONSEQUENTIAL AND INCIDENTAL DAMAGES.

Notwithstanding anything to the contrary herein or in any agreement between Pierce and Buyer, IN NO EVENT SHALL PIERCE BE LIABLE FOR ANY CONSEQUENTIAL, INCIDENTAL, SPECIAL, INDIRECT, OR PUNITIVE DAMAGES WHATSOEVER, WHETHER ARISING OUT OF BREACH OF CONTRACT, WARRANTY, TORT (INCLUDING NEGLIGENCE AND STRICT LIABILITY) OR OTHER THEORY OF LAW OR EQUITY, WITH RESPECT TO VEHICLES OR OTHER PRODUCTS SOLD BY PIERCE, OR THEIR OPERATION OR FAILURE TO OPERATE, OR ANY DEFECTS THEREIN, OR ANY UNDERTAKINGS, ACTS OR OMISSIONS RELATED THERETO, REGARDLESS OF WHETHER PIERCE HAS BEEN INFORMED OF THE POSSIBILITY OF ANY SUCH DAMAGES. Without limiting the generality of the foregoing, Pierce specifically disclaims any liability for property or personal injury damages, penalties, damages for lost profits or revenues, loss of vehicles or products or any associated equipment, cost of substitute vehicles or products, down-time, delay damages, any other types of economic loss, or for any claims by any third party for any such damages.

Note: Any Surety Bond, if a part of the sale of the vehicle as to which this limited warranty is provided, applies only to this Pierce Basic One Year Limited Warranty for such vehicle, and not to other warranties made by Pierce in a separate document (if any) or to the warranties (if any) made by any manufacturer (other than Pierce) of any part, component, attachment or accessory that is incorporated into or attached to the vehicle.

Effective 1 August, 2009

UNITED PLASTIC FABRICATING, INC.

WARRANTY

FOR: POLY-TANK®, POLYSIDE®, INTEGRATOR™, ELLIPSE™, ELLIP-T-TANK™ & DEFENDER™

LIFETIME SERVICE WARRANTY

United Plastic Fabricating, Inc. (hereinafter called "UPF") warrants each POLY-TANK®, Booster/Foam Tank POLYSIDE® Wetside Tank, Integrator Tank/Body, ELLIPSE™ Elliptical Tank, Ellip-T-Tank Tank and DEFENDER™ Skid Tank to be free from defects in material and workmanship for the service life of the original vehicle (vehicle must be actively used in an emergency response for fire suppression). All UPF Tanks must be installed and operated in accordance with the UPF Installation and Operating Guidelines. Failure to do so can void the warranty.

Every UPF Tank is inspected and tested before leaving our facility. Should your UPF Tank require service, please notify UPF via email, fax, in writing or by calling UPF at 1-978-975-4520. Please provide the serial number, a description of the service request, the location along with the phone number and name of the contact person. Our goal is to have scheduled work completed within a reasonable time period.

Under a valid warranty claim, UPF will cover the cost to repair the UPF Tank including the customary and reasonable costs to make the tank accessible such as the removal and reinstallation of the tank if authorized in advance (pre-approved) by UPF. The warranty will not cover tanks that have been improperly installed, operated, misused, abused, or modified from its intended or designed use. Serial number must not have been altered, defaced or removed. Tanks that are not stored or installed properly which results in the tank suffering UV damage will not be covered by this agreement.

Should UPF determine that the service claim is valid under this warranty for a tank located outside of the United States and Canada, UPF will assume the costs for labor and material for the warranty repair as described above plus all travel costs to the U.S. port of embarkation. Costs for airline travel outside of the U.S. and Canada will not be the responsibility of UPF.

In the event the tank shall become stationed in an area of the world that is considered to be a war zone or where unsafe conditions exist for the safe passage of United States Nationals, as reported by the United States Department of State, (http://www.state.gov), and a request to perform service or warranty repairs, UPF reserves the right to refuse to honor such requests. It is the purchaser's responsibility to relocate the tank to an area where such repairs can be performed without undue risk to UPF employees or their designee. UPF will make every reasonable effort to support our products though alternative means.

For Ellipse™ elliptical tanks, a separate five year warranty provided by the subcontractor is applied to the sub-frames, chute linings (rubber isolation strips) and metal components. The stainless steel wrap provided by UPF shall be warranted by the subcontractor performing the wrap installation in accordance with their warranty in place at the time of the installation. UPF will not be liable for any warranty costs associated with the wrap, sub-frames, chute linings (rubber isolation strips) and metal components but will assist with all claims on behalf of its customer.

For PolySide® wetsided tanks and Integrator™ Tank/Body units, all polypropylene components related to the tank shall carry the standard UPF lifetime

Continued on back

UNITED PLASTIC FABRICATING, INC.

WARRANTY

FOR: POLY-TANK®, POLYSIDE®, INTEGRATOR™, ELLIPSE™, ELLIP-T-TANK™ & DEFENDER™

service warranty. Other polypropylene components, including but not limited to compartments, wheel wells, fenders and other body related components shall be warranted by UPF for a period of ten years. The warranty for the PolySide® and Integrator™ units excludes paint or hardware, which shall be covered by the manufacturer of the paint/hardware.

All UPF tanks 50 gallons or less utilized for non-fire applications and installed on specialty vehicles such as ATVs, trailers, boats, etc. are covered under a separate warranty policy available from UPF. Further, UPF Protector™ foam and water trailers are warranted under a separate warranty policy available from UPF.

This UPF warranty is transferable within the United States only with prior written approval by UPF (except an original apparatus manufacturer may assign this warranty to the first titled owner/lessee of the apparatus).

UPF will NOT reimburse any unnecessary work and/or work that has not been pre-approved. Any and all third party charges must be pre-authorized and approved in writing by UPF prior to commencing the work. Any unauthorized third party repairs, alterations, actions or modifications will not be covered and can void the warranty. UPF will be the sole determining authority as to whether a service claim will be valid and covered under this warranty.

In no event will UPF be liable for an amount in excess of the purchase price of the booster/foam tank at the time of manufacture or for any loss or damage, whether direct, indirect, incidental, consequential, or otherwise arising out of failure of its product. Loss of contents (water, foam, etc.) shall not be the responsibility of UPF. Further, UPF is not responsible for costs associated with service repairs to chassis, sub-frames, bodies, valves, dumps, hoses, pressure vacuum vents, and other components (i.e. liquid level transducers, etc.). Further, UPF will not cover the cost for travel of the vehicle to and from a repair facility.

This warranty contains the entire warranty. It is the sole warranty and price agreements or representation, whether oral or written, are either merged herein or expressly cancelled. UPF neither assumes, nor authorizes any person supposing to act on its behalf to change, nor assume for it, any warranty or liability concerning its product.

This warranty gives you specific legal rights, and you may also have other rights which vary from state to state. Some states do not allow exclusion or limitation or incidental or consequential damage, so the above limitation or exclusion may not apply to you. Since some states do not allow limitations on the length of an implied warranty, the above limitation may not apply to you.

THERE ARE NO WARRANTIES, EXPRESSED OR IMPLIED, WHICH EXTEND BEYOND THE DESCRIPTION OF THE FACE HEREOF. THERE IS NO EXPRESS OR IMPLIED WARRANTY OF MERCHANTABILITY OR A WARRANTY OF FITNESS FOR A PARTICULAR PURPOSE. ADDITIONALLY, THIS WARRANTY IS IN LIEU OF ALL OTHER OBLIGATION OR LIABILITIES ON THE PART OF UPF.

POLY-TANK®,& POLYSIDE® are registered trademarks of UPF, Inc. INTEGRATOR™, ELLIPSE™, ELLIP-T-TANK™ & DEFENDER™ are trademarks of UPF, Inc. © 08/01/09 UPF, Inc. Printed in the USA

PIERCE MANUFACTURING INC.

BULLETIN

TO: **All Dealer Service Representatives**

From: **Kevin Hanegraaf**

DATE: **January 4, 2010**

RE: **UPF Tank Warranty Policy – Truck in Accident**

Service Topic #292

To keep the UPF tank warranty valid on trucks that have been involved in a vehicular accident, it is UPF's policy that the customer must remove the tank from the truck and send it back to one of UPF's facilities for inspection. In the event that this does not take place, the warranty will be considered null and void.

The customer must remove and send the tank back to UPF for inspection in order to maintain the original warranty coverage, at which time it will be:

- *Filled with water*
- *Visually inspected*
- *Ultraviolet spark tested on articulating test stand in the dark*
- *Recommendation for repairs if necessary provided by UPF*
- *Fully evaluated and repaired by UPF*

If your customer chooses to leave the tank on the truck and wants a technician to inspect and/or repair the tank in the field, then **the warranty is no longer in effect**. This direction is upheld by UPF because the technician cannot inspect the entire tank when it is still installed on the truck.

Note: This memo is intended to relay the information Pierce has received on UPF's tank warranty for trucks that are in a vehicular accident. In the event of an actual claim, we direct you to consult with UPF's service Manager Maura Watts (800-638-8265 x253)

Fire and Rescue Apparatus

Ten (10) Year Structural Integrity
Apparatus Body
Limited Warranty

1. LIMITED WARRANTY

Subject to the limitations and exclusions set forth below, Pierce Manufacturing provides the following warranty to the Buyer:

Coverage:	**The apparatus body shall be free from structural failures caused by defects in material and workmanship**
Warranty Begins:	**The date of the original purchase invoice (issued when the product ships from the factory).**
Warranty Period Ends After:	**Ten (10) Years - or - 100,000 Miles**
Conditions and Exclusions: **See Also Paragraphs 2 thru 4**	**This warranty applies only to the body tubular support and mounting structures and other structural components of the body of the vehicle model, as identified in the Pierce specifications for the Fire and Rescue Apparatus.** **This warranty does not apply to damage caused by corrosion.**

This limited warranty shall apply only if the product is properly maintained in accordance with Pierce's maintenance instructions and manuals and is used in service which is normal to the particular model. Normal service means service which does not subject the product to stresses or impacts greater than normally result from careful use. If the Buyer discovers a defect or nonconformity, it must notify Pierce in writing within thirty (30) days after the date of discovery, but in any event prior to the expiration of the warranty period. THIS LIMITED WARRANTY MAY NOT BE ASSIGNED OR OTHERWISE TRANSFERRED BY THE BUYER TO ANY SUBSEQUENT USER OR PURCHASER OR TO ANY OTHER PERSON OR ENTITY.

Notwithstanding anything to the contrary herein, Pierce makes no warranty whatsoever as to:

(a) any integral parts, components, attachments or trade accessories of or to the product that are not manufactured by Pierce, including but not limited to engines, transmissions, drivelines, axles, water pumps and generators; with respect to all such parts, components, attachments and accessories, Pierce shall assign to Buyer the applicable warranties, if any, made by the respective manufacturers thereof;

(b) any vehicle, chassis, or component, part, attachment or accessory damaged by misuse, neglect, fire, exposure to severe environmental or chemical conditions, acidic environment, improper maintenance, accident, crash, or force majeure such as natural disaster, lightning, earthquake, windstorm, hail, flood, war or riot;

(c) any vehicle, chassis or component, part, attachment or accessory that has been repaired, altered or assembled in any way by any person or entity other than Pierce which, in the sole judgment of Pierce, adversely affects the performance, stability or purpose for which it was manufactured; or

(d) products or parts which may in the ordinary course wear out and have to be replaced during the warranty period, including, but not limited to, tires, fluids, gaskets and light bulbs. Pierce assumes no responsibility for the assembly of its parts or subassemblies into finishing products or vehicles unless the assembly is performed by Pierce.

The original purchaser may void this warranty in part or in its entirety if the product is repaired or replaced (a) without prior written approval of the Pierce Customer Service Department; or (b) at a facility which has not been approved by Pierce as to technical capability. Any repairs, modifications, alterations or aftermarket parts added after manufacture without the authorization of Pierce may void this warranty.

2. DISCLAIMERS OF WARRANTIES

THE WARRANTY SET FORTH IN PARAGRAPH 1 IS THE SOLE AND EXCLUSIVE WARRANTY GIVEN BY PIERCE. PIERCE HEREBY DISCLAIMS AND EXCLUDES ALL OTHER WARRANTIES, WHETHER EXPRESS, IMPLIED OR STATUTORY, INCLUDING WITHOUT LIMITATION ANY WARRANTY OF MERCHANTABILITY, ANY WARRANTY OF FITNESS FOR A PARTICULAR PURPOSE, AND ANY WARRANTIES ARISING FROM COURSE OF DEALING OR USAGE OF TRADE.

3. BUYER'S EXCLUSIVE REMEDY.

If the product fails to conform to the warranty set forth in paragraph 1 during the warranty period, and such nonconformity is not due to misuse, neglect, accident or improper maintenance, Buyer must notify Pierce within the time period specified in paragraph 1, and shall make the product available for inspection by Pierce or its designated agent. At the request of Pierce, any allegedly defective product shall be returned to Pierce by Buyer for examination and/or repair. Buyer shall be responsible for the cost of such transportation, and for risk of loss of or damage to the product during transportation. Within a reasonable time, Pierce shall repair or replace (at Pierce's option and expense) any nonconforming or defective parts. Repair or replacement shall be made only by a facility approved in advance in writing by Pierce. THIS REMEDY SHALL BE THE EXCLUSIVE AND SOLE REMEDY FOR ANY BREACH OF WARRANTY.

4. EXCLUSION OF CONSEQUENTIAL AND INCIDENTAL DAMAGES.

Notwithstanding anything to the contrary herein or in any agreement between Pierce and Buyer, IN NO EVENT SHALL PIERCE BE LIABLE FOR ANY CONSEQUENTIAL, INCIDENTAL, SPECIAL, INDIRECT, OR PUNITIVE DAMAGES WHATSOEVER, WHETHER ARISING OUT OF BREACH OF CONTRACT, WARRANTY, TORT (INCLUDING NEGLIGENCE AND STRICT LIABILITY) OR OTHER THEORY OF LAW OR EQUITY, WITH RESPECT TO VEHICLES OR OTHER PRODUCTS SOLD BY PIERCE, OR THEIR OPERATION OR FAILURE TO OPERATE, OR ANY DEFECTS THEREIN, OR ANY UNDERTAKINGS, ACTS OR OMISSIONS RELATED THERETO, REGARDLESS OF WHETHER PIERCE HAS BEEN INFORMED OF THE POSSIBILITY OF ANY SUCH DAMAGES. Without limiting the generality of the foregoing, Pierce specifically disclaims any liability for property or personal injury damages, penalties, damages for lost profits or revenues, loss of vehicles or products or any associated equipment, cost of substitute vehicles or products, down-time, delay damages, any other types of economic loss, or for any claims by any third party for any such damages.

Note: Any Surety Bond, if a part of the sale of the vehicle as to which this limited warranty is provided, applies only to this Pierce Basic One Year Limited Warranty for such vehicle, and not to other warranties made by Pierce in a separate document (if any) or to the warranties (if any) made by any manufacturer (other than Pierce) of any part, component, attachment or accessory that is incorporated into or attached to the vehicle.

LIMITED WARRANTY

(Effective 07-08-2011)

SECTION 1 - WARRANTY TERMS

R•O•M Corporation ("R•O•M") warrants that the equipment and parts sold by it (collectively, the "Product") will be free from manufacturing defects for a period of up to 7 years from date of purchase provided that the Product is used under conditions of normal use, that regular periodic maintenance and service is performed and that the Product was installed in accordance with R•O•M's instructions.

The limited warranty is not transferable in the event the Product is sold, traded or transferred to another party.

SECTION 2 - EXCEPTIONS TO WARRANTY TERMS

2.1 R•O•M Replacement Parts:

a. Warranty period for manufacturing defects equivalent to warranty of original product.

2.2 R•O•M Roll-up Shutter Door / Horizontal Hose Bed Cover:

a. Warranty period for manufacturing defects is 7 years from the date of purchase (excluding electrical components).

b. *LED V3 Lightbar components* - Warranty period for manufacturing defects is 7 years from the date of purchase.

c. *Door ajar switch* - warranty period for manufacturing defects is 3 years from the date of purchase.

d. *All other electrical components* – warranty period for manufacturing defects is 1 year from the date of purchase.

e. Perfect Match Wet Paint System™:

- *PPG Delta / Delfleet*: Covered 100% for 84 months from date of purchase for excessive loss of gloss caused from cracking, checking and hazing. Covered 100% for 84 months from date of purchase for cracking or checking, peeling or de-lamination of the topcoat or other layer of paint.
- *Sikkens Autocoat LV:* Covered 100% for 84 months from date of purchase for items directly related to durability and appearance of the topcoat (gloss, color retention, cracking). Covered for 72 months from date of purchase, for items related to the integrity of the entire coating system (adhesion, peeling), coverage will be 100% for the first 36 months from date of purchase, from the 37th month to the 48th month from the date of purchase coverage will be 50%, from the 49th month to the 72nd month from date of purchase coverage will be 25%.
- *DuPont Performance Coating products – Imron and Imron Elite:* R•O•M warrants that finished areas will be free throughout the warranty period from: corrosion, blistering, cracking, peeling, hazing, chalking, delamination, and unreasonable loss of gloss throughout the entire finished area. Covered 100% for 60 months from date of purchase, coverage will be 75% from the 61st month to the 72nd month from the date of purchase, and coverage will be 50% from the 73rd month to the 84th month from date of purchase.
- *Other*: Contact factory.

2.3 R•O•M Extreme Cargo Tray and Slides:

a. Warranty period for manufacturing defects is 7 years from the date of purchase.

2.4 DuroLumen™ LED V3 Light:

a. Warranty period for manufacturing defects to the original consumer/purchaser is 7 years from the date of purchase.

2.5 LoadMaker™ Bulkhead (3" construction):

a. Warranty period for manufacturing defects is 1 year from the date of purchase.

b. *Core*: For the life of the bulkhead, the core will not delaminate or break from flexural movement along the length of the core.

2.6 Center ZoneMaker™ Bulkhead (2" construction):

a. Warranty period for manufacturing defects is 1 year from the date of purchase.

b. *Core*: For period of 5 years from date of purchase, the core will not delaminate or break from flexural movement along the length of the core.

2.7 T-WarrioR™ Bulkhead (3" construction):

a. Warranty period for manufacturing defects is 1 year from the date of purchase.

2.8 R•O•M RoadwarrioR™ and SidekicK™ Ramps, Carriers, Platforms, Ladders, etc...:

a. Warranty period for manufacturing defects is 1 year from the date of purchase.

2.9 R•O•M LinksGuard™ Chain Gates, Dock Gates, Truck Gates, etc…:

a. Warranty period for manufacturing defects is 1 year from the date of purchase.

SECTION 3 - EXCLUSIONS FROM WARRANTY

3.1 This limited warranty does not cover normal maintenance, service and adjustments or damage to Product relating to:

a. Accident, alteration, misuse, negligence, abuse, vandalism or physical damage;

b. Any repair, replacement or alteration by a facility not approved in advance by R•O•M;

c. Improper installation (including electrical damage caused by improper installation), failure to follow the installation instructions provided by R•O•M;

d. Use inconsistent with the instruction manual or abuse;

e. Use of equipment or parts not manufactured by R•O•M;

f. Fire, explosion, implosion, flood, earthquake, lightning strike, acid rain, chemical fallout, catastrophic event, or other act of God or nature;

g. Exposure to severe environmental conditions or excessive heat;

h. Exposure to chemicals and other substances (other than cleaning agents specifically recommended in the instruction manual);

i. Exposure to unintended uses and/or substances;

j. Acts or omissions of any carrier delivering the Products;

k. Any failure to care for or maintain the Products in accordance with the instruction manual;

l. Damage to the R•O•M Roll-up Shutter Door resulting from the door being left in the open position while the vehicle is in motion.

m. Damage to the R•O•M Roll-up Shutter Perfect Match Wet Paint System™ resulting from or relating to:

- Application or removal of stickers, decals, adhesive tapes or adhesives of any kind or other subsequently applied signs, artwork or lettering; or

- Accidents, scratches, abrasions, chips, bruises and gloss reduction to the Perfect Match Wet Paint System™ caused intentionally, accidentally or by normal vehicle use and maintenance; or
- Hazing, chalking, loss of gloss or peeling of the Perfect Match Wet Paint System™ caused by improper care, abrasive polishes, aggressive chemicals, cleaning agents, heavy-duty pressure washing or aggressive mechanical wash systems; or

n. Damage to the LoadMaker™, ZoneMaker™, or T-WarrioR™ bulkheads resulting from excessive compressive forces of any kind, any puncture, cutting, or ripping.

o. The DuroLumen™ LED V3 Light limited warranty does not apply to:

- Severe applications, such as off-road vehicles, construction equipment, buses, or external applications (these applications are examples only and are not all inclusive of such excluded applications); or
- Damage due to chemicals and or incompatible cleaners.

SECTION 4 - CONDITIONS OF WARRANTY

4.1 This limited warranty is conditioned upon and will be invalidated by failure to comply with the following conditions:

a. The Product and any ancillary equipment, components or parts must be installed in accordance with the instruction manual provided by R•O•M.

b. Regular maintenance and service must be performed on the Products;

c. The Products must be put to their intended use;

d. Replacement parts must be manufactured by R•O•M;

e. Complete compliance with the claims procedure set forth in Section 5 below; and

f. R•O•M must have received full and timely payment of all invoices issued to the customer.

SECTION 5 - NOTICE OF CLAIMS AND REPLACEMENT POLICY

5.1 Claims under this limited warranty must be in writing and presented to and received by R•O•M Corporation at 6800 East 163rd Street, Belton, Missouri 64012, within the applicable warranty period set forth in Sections 1 and 2 above. All claims must include the serial number of the Product, the name of the purchaser, and the date the alleged problem was discovered. Within 30 business days of receiving a written claim pursuant to Section 5.1, a member of R•O•M's staff will contact the customer and arrange for a time and place for a R•O•M representative to inspect the Products, if necessary. Alternatively, R•O•M may request the return of the Product.

If R•O•M instructs the customer to return the Products to R•O•M, the item will be assigned a Return Goods Authorization ("RGA") number and the item must be returned to R•O•M within 30 days of the RGA number being assigned. If the item is not returned within 30 days of the assignment of the RGA number, this limited warranty will terminate and R•O•M will have no further liability or obligation with respect to that Product.

5.2 After a representative of R•O•M inspects the Products or assesses the problem, R•O•M will take appropriate action, in its sole discretion, to remedy the alleged problem. If the claim is for a manufacturing defect, R•O•M must be satisfied, in its sole discretion, that the Products were defective at the time it left R•O•M's factory.

5.3 If R•O•M ships replacement parts prior to the receipt of the allegedly defective part, the replacement part at R•O•M's discretion will be invoiced FOB Belton, Missouri and upon receipt of the allegedly defective part, R•O•M will credit the customer's account, if R•O•M determines, in its sole discretion, that the returned part is covered by this limited warranty.

5.4 Labor reimbursement up to 3 years. R•O•M will determine, at it's own discretion, the amount of time that it will reimburse for any labor associated with this limited warranty, depending on the nature of the claim. R•O•M will not reimburse any labor connected with the removal or reinstallation of adhesives, decals, stickers, tapes, etc… R•O•M may reimburse for labor with prior approval from an authorized R•O•M representative strictly adhering to the guidelines listed below. This authorization will

pay for removal, replacement and reinstallation of the allegedly defective Product. Warranty coverage only applies to original equipment supplied by R•O•M and does not extend to door attachments including (but not limited to) decals, emblems, stripes and adhesives, equipment removal, compartment configurations (i.e.: false walls, shelves), etc… Reimbursement is for repairs only, travel to and from truck location is not covered.

Guidelines – maximum allowance:

R•O•M Roll-up Shutter Doors and Parts:

- 1 Door 1.5 hours
- 1 Curtain (slats) 1.5 hours
- 1 Door Ajar Switch 1.0 hour
- Other Contact Factory
- 1 Bottom Rail Assembly 1.0 hour
- 1 Slat Replacement 1.5 hours
- 1 Operator 1.5 hours

Other R•O•M Products: (Contact Factory)

Maximum reimbursement rate is $60.00 per hour.

SECTION 6 - REMEDY

6.1 The customer's exclusive remedy under this limited warranty is the repair or replacement of the Product, as determined by R•O•M in its sole discretion.

SECTION 7 - LIMITATION OF LIABILITY

7.1 THE LIMITED WARRANTY DESCRIBED ABOVE IS THE ONLY WARRANTY MADE BY R•O•M CORPORATION, AND SHALL BE IN LIEU OF ANY OTHER WARRANTY, EXPRESS OR IMPLIED, INCLUDING, BUT NOT LIMITED TO, ANY IMPLIED WARRANTY OF MERCHANTABILITY OR FITNESS FOR A PARTICULAR PURPOSE. THERE ARE NO WARRANTIES THAT EXTEND BEYOND THE DESCRIPTION ON THE FACE HEREOF. R•O•M CORPORATION SHALL NOT BE LIABLE FOR ANY OTHER DAMAGE OF ANY KIND INCLUDING, BUT NOT LIMITED TO, PUNATIVE, SPECIAL, INCIDENTAL OR CONSEQUENTIAL DAMAGES, INCLUDING DAMAGES FOR LOST PROFITS, LOST SALES, OR INJURY TO PERSON OR PROPERTY. NO REMEDY FOR SUCH DAMAGES SHALL BE AVAILABLE REGARDLESS OF WHETHER SUCH CLAIM IS BASED ON CONTRACT, NEGLIGENCE, TORT OR STRICT LIABILITY.

7.2 NO STATEMENT MADE BY ANY PERSON WITH RESPECT TO ANY PRODUCT SHALL CONSTITUTE A WARRANTY, BE RELIED UPON ANY CUSTOMER OR BE DEEMED PART OF THIS LIMITED WARRANTY OR ANY SALE AGREEMENT BETWEEN R•O•M AND THE CUSTOMER.

SECTION 8 – CHANGED, RETURNED OR CANCELLED ORDERS

8.1 Changed orders: Alterations or modifications requested within 10 working days (15 working days for painted orders) of the scheduled ship date could result in additional charges for incurred material and labor costs, and may effect the delivery date.

8.2 Cancelled orders: Cancelled orders are subject to a 10% cancellation fee.

8.3 Returned items: With prior approval goods may be returned within 10 business days of invoice date (excludes custom made products & parts). Returned goods are subject to a 15% restocking fee. No credit allowed for goods returned without prior approval.

Waterous Seven-Year Limited Warranty

WATEROUS warrants, to the original Buyer only, that products manufactured by WATEROUS will be free from defects in material and workmanship under normal use and service for a period of seven (7) years from the date the product is first placed in service, or seven and one-half (7-1/2) years from the date of shipment by WATEROUS, whichever period shall be the first to expire; provided the Buyer notifies WATEROUS, in writing, of the defect in said product within the warranty period, and said product is found by WATEROUS to be nonconforming with the aforesaid warranty. When required in writing by WATEROUS, defective products must be promptly returned by Buyer to WATEROUS at WATEROUS' plant at South St. Paul, Minnesota, or at such other place as may be specified by WATEROUS, with transportation and other charges prepaid. A Returned Material Authorization (RMA) is required for all products and parts and may be requested by phone, fax, email, or mail. The aforesaid warranty excludes any responsibility or liability of WATEROUS for:

(a) damages or defects due to accident, abuse, misuse, abnormal operating conditions, negligence, accidental causes, use in non-firefighting applications, or improper maintenance, or attributable to written specifications or instructions furnished by Buyer;

(b) defects in products manufactured by others and furnished by WATEROUS hereunder, it being understood and agreed by the parties that the only warranty provided for such products shall be the warranty provided by the manufacturer thereof which, if assignable, WATEROUS will assign to Buyer, if requested by Buyer;

(c) any product or part, altered, modified, serviced or repaired other than by WATEROUS, without its prior written consent;

(d) the cost of dismantling, removing, transporting, storing, or insuring the defective product or part and the cost of reinstallation; and

(e) normal wear items (packing, strainers, filters, light bulbs, anodes, intake screens, mechanical seals, etc.).

ALL OTHER WARRANTIES ARE EXCLUDED, WHETHER EXPRESS OR IMPLIED BY OPERATION OF LAW OR OTHERWISE, INCLUDING ALL IMPLIED WARRANTIES OF MERCHANTABILITY OR FITNESS FOR A PARTICULAR PURPOSE. IN NO EVENT, WHETHER AS A RESULT OF BREACH OF CONTRACT, WARRANTY, TORT (INCLUDING NEGLIGENCE), STRICT LIABILITY, OR ANY OTHER CAUSE OF ACTION, SHALL WATEROUS BE LIABLE FOR ANY PUNITIVE, SPECIAL, INCIDENTAL OR CONSEQUENTIAL DAMAGES, OR FOR PERSONAL INJURY OR PROPERTY DAMAGES.

The exclusive remedy of Buyer and the sole liability of WATEROUS, whether based on contract, warranty, tort or any other basis of recovery whatsoever, is expressly limited at the election of WATEROUS to:

(a) the replacement at the agreed point of delivery of any product or part, which upon inspection by WATEROUS or its duly authorized representative, is found not to conform to the limited warranty set forth above, or

(b) the repair of such product or part, or

(c) the refund or crediting to Buyer of the net sales price of the defective product or part.

BUYER'S REMEDIES CONTAINED HEREIN ARE EXCLUSIVE OF ANY OTHER REMEDY OTHERWISE AVAILABLE TO BUYER.

Waterous Company
125 Hardman Avenue South
South St. Paul, MN 55075 USA
www.waterousco.com

WATEROUS

F-2891 (04/15/20)

Fire and Rescue Apparatus

Ten (10) Year Material and Workmanship Stainless Steel Piping

Limited Warranty

1. LIMITED WARRANTY

Subject to the limitations and exclusions set forth below, Pierce Manufacturing provides the following warranty to the Buyer:

Coverage:	**Stainless steel piping shall be free from structural failures caused by defects in material and workmanship, or perforation caused by corrosion.**
Warranty Begins:	**The date of the original purchase invoice (issued when the product ships from the factory).**
Warranty Period Ends After:	**Ten (10) Years - or - 100,000 Miles**
Conditions and Exclusions: **See Also Paragraphs 2 thru 4**	**Pierce's obligation under this warranty is limited to repairing or replacing without charge, as Pierce may elect, the stainless steel piping or components which Pierce determines to have failed due to defective material and workmanship, or perforation caused by corrosion.** **This warranty does not cover the use of fluoroprotein (FP) type foam. The sodium chloride within FP foam can cause long-term damage to system components if not thoroughly flushed immediately after use.**

This limited warranty shall apply only if the product is properly maintained in accordance with Pierce's maintenance instructions and manuals and is used in service which is normal to the particular model. Normal service means service which does not subject the product to stresses or impacts greater than normally result from careful use. If the Buyer discovers a defect or nonconformity, it must notify Pierce in writing within thirty (30) days after the date of discovery, but in any event prior to the expiration of the warranty period. THIS LIMITED WARRANTY MAY NOT BE ASSIGNED OR OTHERWISE TRANSFERRED BY THE BUYER TO ANY SUBSEQUENT USER OR PURCHASER OR TO ANY OTHER PERSON OR ENTITY.

Notwithstanding anything to the contrary herein, Pierce makes no warranty whatsoever as to:

(a) any integral parts, components, attachments or trade accessories of or to the product that are not manufactured by Pierce, including but not limited to engines, transmissions, drivelines, axles, water pumps and generators; with respect to all such parts, components, attachments and accessories, Pierce shall assign to Buyer the applicable warranties, if any, made by the respective manufacturers thereof;

(b) any vehicle, chassis, or component, part, attachment or accessory damaged by misuse, neglect, fire, exposure to severe environmental or chemical conditions, acidic environment, improper maintenance, accident, crash, or force majeure such as natural disaster, lightning, earthquake, windstorm, hail, flood, war or riot;

(c) any vehicle, chassis or component, part, attachment or accessory that has been repaired, altered or assembled in any way by any person or entity other than Pierce which, in the sole judgment of Pierce, adversely affects the performance, stability or purpose for which it was manufactured; or

(d) products or parts which may in the ordinary course wear out and have to be replaced during the warranty period, including, but not limited to, tires, fluids, gaskets and light bulbs. Pierce assumes no responsibility for the assembly of its parts or subassemblies into finishing products or vehicles unless the assembly is performed by Pierce.

The original purchaser may void this warranty in part or in its entirety if the product is repaired or replaced (a) without prior written approval of the Pierce Customer Service Department; or (b) at a facility which has not been approved by Pierce as to technical capability. Any repairs, modifications, alterations or aftermarket parts added after manufacture without the authorization of Pierce may void this warranty.

2. DISCLAIMERS OF WARRANTIES

THE WARRANTY SET FORTH IN PARAGRAPH 1 IS THE SOLE AND EXCLUSIVE WARRANTY GIVEN BY PIERCE. PIERCE HEREBY DISCLAIMS AND EXCLUDES ALL OTHER WARRANTIES, WHETHER EXPRESS, IMPLIED OR STATUTORY, INCLUDING WITHOUT LIMITATION ANY WARRANTY OF MERCHANTABILITY, ANY WARRANTY OF FITNESS FOR A PARTICULAR PURPOSE, AND ANY WARRANTIES ARISING FROM COURSE OF DEALING OR USAGE OF TRADE.

3. BUYER'S EXCLUSIVE REMEDY.

If the product fails to conform to the warranty set forth in paragraph 1 during the warranty period, and such nonconformity is not due to misuse, neglect, accident or improper maintenance, Buyer must notify Pierce within the time period specified in paragraph 1, and shall make the product available for inspection by Pierce or its designated agent. At the request of Pierce, any allegedly defective product shall be returned to Pierce by Buyer for examination and/or repair. Buyer shall be responsible for the cost of such transportation, and for risk of loss of or damage to the product during transportation. Within a reasonable time, Pierce shall repair or replace (at Pierce's option and expense) any nonconforming or defective parts. Repair or replacement shall be made only by a facility approved in advance in writing by Pierce. THIS REMEDY SHALL BE THE EXCLUSIVE AND SOLE REMEDY FOR ANY BREACH OF WARRANTY.

4. EXCLUSION OF CONSEQUENTIAL AND INCIDENTAL DAMAGES.

Notwithstanding anything to the contrary herein or in any agreement between Pierce and Buyer, IN NO EVENT SHALL PIERCE BE LIABLE FOR ANY CONSEQUENTIAL, INCIDENTAL, SPECIAL, INDIRECT, OR PUNITIVE DAMAGES WHATSOEVER, WHETHER ARISING OUT OF BREACH OF CONTRACT, WARRANTY, TORT (INCLUDING NEGLIGENCE AND STRICT LIABILITY) OR OTHER THEORY OF LAW OR EQUITY, WITH RESPECT TO VEHICLES OR OTHER PRODUCTS SOLD BY PIERCE, OR THEIR OPERATION OR FAILURE TO OPERATE, OR ANY DEFECTS THEREIN, OR ANY UNDERTAKINGS, ACTS OR OMISSIONS RELATED THERETO, REGARDLESS OF WHETHER PIERCE HAS BEEN INFORMED OF THE POSSIBILITY OF ANY SUCH DAMAGES. Without limiting the generality of the foregoing, Pierce specifically disclaims any liability for property or personal injury damages, penalties, damages for lost profits or revenues, loss of vehicles or products or any associated equipment, cost of substitute vehicles or products, down-time, delay damages, any other types of economic loss, or for any claims by any third party for any such damages.

Note: Any Surety Bond, if a part of the sale of the vehicle as to which this limited warranty is provided, applies only to this Pierce Basic One Year Limited Warranty for such vehicle, and not to other warranties made by Pierce in a separate document (if any) or to the warranties (if any) made by any manufacturer (other than Pierce) of any part, component, attachment or accessory that is incorporated into or attached to the vehicle.

Fire and Rescue Apparatus

Twenty (20) Year Structural Integrity
Pierce Aerial Device

Limited Warranty

1. LIMITED WARRANTY

Subject to the limitations and exclusions set forth below, Pierce Manufacturing provides the following warranty to the Buyer:

Coverage:	**Each new Pierce Aerial Device shall be free from defects in material and workmanship.** **Aerial Device Models Covered by this warranty include:** **Aerial Platforms** **Aerial Ladders** **SkyBoom**
Warranty Begins:	**The date of the original purchase invoice (issued when the product ships from the factory).**
Warranty Period Ends After:	**Twenty (20) Years** **- or -** **100,000 Miles**
Conditions and Exclusions: **See Also Paragraphs 2 thru 4**	**This warranty applies only to the torque box, turntable, aerial sections and other structural components of the aerial device, as identified in the Pierce specifications for the aerial device. This warranty shall be void if, or to the extent that the aerial device is not maintained in strict compliance with NFPA Standard 1911 in effect at time of sale, including such periodic inspections and testing by qualified third parties as are required by that Standard as it may be in effect from time to time. Proof of such compliance shall accompany any claims under this warranty. Third party testing agencies known to Pierce to be qualified for such purposes may be obtained from the Pierce Customer Service Department** **This warranty does not apply to damage caused by corrosion.**

This limited warranty shall apply only if the product is properly maintained in accordance with Pierce's maintenance instructions and manuals and is used in service which is normal to the particular model. Normal service means service which does not subject the product to stresses or impacts greater than normally result from careful use. If the Buyer discovers a defect or nonconformity, it must notify Pierce in writing within thirty (30) days after the date of discovery, but in any event prior to the expiration of the warranty period. THIS LIMITED WARRANTY MAY NOT BE ASSIGNED OR OTHERWISE TRANSFERRED BY THE BUYER TO ANY SUBSEQUENT USER OR PURCHASER OR TO ANY OTHER PERSON OR ENTITY.

Notwithstanding anything to the contrary herein, Pierce makes no warranty whatsoever as to:

(a) any integral parts, components, attachments or trade accessories of or to the product that are not manufactured by Pierce, including but not limited to engines, transmissions, drivelines, axles, water pumps and generators; with respect to all such parts, components, attachments and accessories, Pierce shall assign to Buyer the applicable warranties, if any, made by the respective manufacturers thereof;

(b) any vehicle, chassis, or component, part, attachment or accessory damaged by misuse, neglect, fire, exposure to severe environmental or chemical conditions, acidic environment, improper maintenance, accident, crash, or force majeure such as natural disaster, lightning, earthquake, windstorm, hail, flood, war or riot;

(c) any vehicle, chassis or component, part, attachment or accessory that has been repaired, altered or assembled in any way by any person or entity other than Pierce which, in the sole judgment of Pierce, adversely affects the performance, stability or purpose for which it was manufactured; or

(d) products or parts which may in the ordinary course wear out and have to be replaced during the warranty period, including, but not limited to, tires, fluids, gaskets and light bulbs. Pierce assumes no responsibility for the assembly of its parts or subassemblies into finishing products or vehicles unless the assembly is performed by Pierce.

The original purchaser may void this warranty in part or in its entirety if the product is repaired or replaced (a) without prior written approval of the Pierce Customer Service Department; or (b) at a facility which has not been approved by Pierce as to technical capability. Any repairs, modifications, alterations or aftermarket parts added after manufacture without the authorization of Pierce may void this warranty.

2. DISCLAIMERS OF WARRANTIES

THE WARRANTY SET FORTH IN PARAGRAPH 1 IS THE SOLE AND EXCLUSIVE WARRANTY GIVEN BY PIERCE. PIERCE HEREBY DISCLAIMS AND EXCLUDES ALL OTHER WARRANTIES, WHETHER EXPRESS, IMPLIED OR STATUTORY, INCLUDING WITHOUT LIMITATION ANY WARRANTY OF MERCHANTABILITY, ANY WARRANTY OF FITNESS FOR A PARTICULAR PURPOSE, AND ANY WARRANTIES ARISING FROM COURSE OF DEALING OR USAGE OF TRADE.

3. BUYER'S EXCLUSIVE REMEDY.

If the product fails to conform to the warranty set forth in paragraph 1 during the warranty period, and such nonconformity is not due to misuse, neglect, accident or improper maintenance, Buyer must notify Pierce within the time period specified in paragraph 1, and shall make the product available for inspection by Pierce or its designated agent. At the request of Pierce, any allegedly defective product shall be returned to Pierce by Buyer for examination and/or repair. Buyer shall be responsible for the cost of such transportation, and for risk of loss of or damage to the product during transportation. Within a reasonable time, Pierce shall repair or replace (at Pierce's option and expense) any nonconforming or defective parts. Repair or replacement shall be made only by a facility approved in advance in writing by Pierce. THIS REMEDY SHALL BE THE EXCLUSIVE AND SOLE REMEDY FOR ANY BREACH OF WARRANTY.

4. EXCLUSION OF CONSEQUENTIAL AND INCIDENTAL DAMAGES.

Notwithstanding anything to the contrary herein or in any agreement between Pierce and Buyer, IN NO EVENT SHALL PIERCE BE LIABLE FOR ANY CONSEQUENTIAL, INCIDENTAL, SPECIAL, INDIRECT, OR PUNITIVE DAMAGES WHATSOEVER, WHETHER ARISING OUT OF BREACH OF CONTRACT, WARRANTY, TORT (INCLUDING NEGLIGENCE AND STRICT LIABILITY) OR OTHER THEORY OF LAW OR EQUITY, WITH RESPECT TO VEHICLES OR OTHER PRODUCTS SOLD BY PIERCE, OR THEIR OPERATION OR FAILURE TO OPERATE, OR ANY DEFECTS THEREIN, OR ANY UNDERTAKINGS, ACTS OR OMISSIONS RELATED THERETO, REGARDLESS OF WHETHER PIERCE HAS BEEN INFORMED OF THE POSSIBILITY OF ANY SUCH DAMAGES. Without limiting the generality of the foregoing, Pierce specifically disclaims any liability for property or personal injury damages, penalties, damages for lost profits or revenues, loss of vehicles or products or any associated equipment, cost of substitute vehicles or products, down-time, delay damages, any other types of economic loss, or for any claims by any third party for any such damages.

Note: Any Surety Bond, if a part of the sale of the vehicle as to which this limited warranty is provided, applies only to this Pierce Basic One Year Limited Warranty for such vehicle, and not to other warranties made by Pierce in a separate document (if any) or to the warranties (if any) made by any manufacturer (other than Pierce) of any part, component, attachment or accessory that is incorporated into or attached to the vehicle.

AMITY FIRE AND SAFETY, INC.
3750 CHESTNUT ROAD
ALBURTIS, PA 18011-0451
Phone: 610-966-3115
Fax: 610-965-6313

* STANDARD FIVE YEAR WARRANTY *

(standard warranty is in effect for parts shipped after 4/15/10)

Three Function Swivel

A. PRESHIPMENT TESTING The Three Function Swivel fabricated by Amity which is exposed to pressure during normal use is subject to final inspection using the following pressure minimums:

1. Hydrostatic applications will be tested to 400 PSI unless specified otherwise on approved drawings. Operating pressures on installed systems are not to exceed 250 PSI at any point in the system. Warranty will be voided and Amity will not be held liable for failure and/or damage occurring from Water Hammering or freezing of water in any system.
2. Hydraulic applications will be tested to 4000 PSI. System operating pressure in application to be 3000 PSI maximum.
3. Dielectric and Continuity Test all circuits. 30 Amp max current loading.

B. THREE FUNCTION SWIVEL MAINTENANCE – Our Three Function Swivel has been fully tested at assembly. Under no circumstances is there to be any maintenance performed internally or externally to the Three Function Swivel by Purchaser or any other third party other than an authorized representative of or Amity itself. The Three Function Swivel is sealed and must remain so. The Three Function Swivel is designed for a long maintenance free life. Should any problems occur or replacement be necessary, first contact Amity. There is to be no field maintenance performed on the Three Function Swivel .

C. MOUNTING REQUIREMENTS – The following are the mounting requirements for the Three Function Swivel:

1. Mounting points and methods are to be determined at the initial design stage. All drawings and applicable documentation must be signed off by both parties and filed for future reference. No deviation to the approved mounting is allowed without approval from Amity.
2. The Three Function Swivel is to be mounted concentric to the center of the turntable bearing.
3. All inlet and outlet plumbing to conform to swivel mounting, under no circumstances is the Three Function Swivel to be positioned to match connections. This will avoid putting excessive loads on the Three Function Swivel. All tubing or piping to be supported by means other than the Three Function Swivel.

D. LIMITED WARRANTY, LIMITATIONS, CONDITIONS AND PROCEDURES REQUIRED.

1. The Three Function Swivel is warranted to be free of defects in labor and/or materials for a period of five (5) years from the Date of Service. For purposes here, “Date of Service” shall mean the date when the Three Function Swivel, or the unit to which the Three Function Swivel is incorporated, passes final Underwriters Laboratory testing, or similarly compliant testing, and is certified for service. Evidence of such Date of Service shall be required in connection with any warranty claim by Purchaser.
2. The Three Function Swivel shall be repaired or replaced at the sole option and expense of the Amity provided the Three Function Swivel alleged to be defective was used for its intended normal use of operation and subject to the following qualifications and limitations.
3. Any alteration of the Three Function Swivel without consent from Amity is strictly forbidden and shall void warranty.
4. No welding shall be performed on finished Three Function Swivel.
5. No responsibility is assumed for any malfunctions or damages which are occasionally caused by foreign objects which may be ingested into water or hydraulic systems such as, but not limited to stones, sand or metal chips.
6. Amity assumes responsibility for our Three Function Swivel, which is defective only, and therefore, it will not assume responsibility for labor to either remove or install our Three Function Swivel unless it agrees in writing to assume such responsibility.
7. Unless otherwise approved in writing by the Amity all returns of defective Three Function Swivels (or allegedly defective Three Function Swivels) are at Purchaser’s expense and must include a RGA number issued by the Amity.

8. All warranty claims must be presented at the time the problem occurs, or as soon as practical thereafter, either called or faxed to the Amity and include the numbers on the assembly's Amity's label with a detailed explanation of the difficulty in order for the matter to be appropriately evaluated and resolved.
9. Amity will not be held liable for damage incurred during shipment.
10. No responsibility shall be assumed for misuse or improper mounting, unreasonably use or abuse of the Three Function Swivel and or failure to provide or use improper maintenance, failure to follow written installation and use in instruction or any use other than the customary designed use.

THE REMEDIES PROVIDED IN THE ABOVE EXPRESS LIMITED WARRANTY AND ARE THE SOLE AND EXCLUSIVE REMEDIES AVAILABLE. NO OTHER EXPRESS WARRANTIES ARE MADE. ALL IMPLIED WARRANTIES, INCLUDING BUT NOT LIMITED TO ANY IMPLIED WARRANTY OF MERCHANTABILITY OR FITNESS FOR A PARTICULAR PURPOSE OR USE ARE LIMITED IN DURATION AS SET FORTH ABOVE. IN NO EVENT SHALL THE AMITY ASSUME OR BE LIABLE FOR ANY INCIDENTAL OR CONSEQUENTIAL DAMAGES.

THE WITHIN DESCRIBED WARRANTY SHALL ONLY BE AFFORDED TO THE ORIGINAL PURCHASER OR FOR INCORPORATION INTO ANOTHER UNIT AND TO FIRST PURCHASER AS PART OF COMPLETED UNIT, HOWEVER, THE WARRANTY PERIOD OF FIVE YEARS IS FROM THE DATE OF SERVICE WITH THE UNDERSTANDING IT IS INSTALLED WITHIN A REASONABLE TIME PERIOD.

Dated: _____ ____, 20__



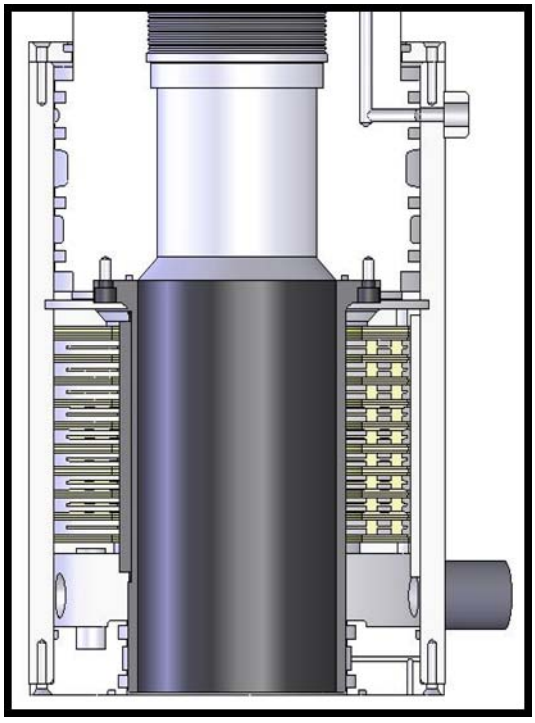

Fire and Rescue Apparatus

Five (5) Year Material and Workmanship Aerial Hydraulic System Components

Three (3) Year Material and Workmanship Aerial Hydraulic System Seals

Limited Warranty

1. LIMITED WARRANTY

Subject to the limitations and exclusions set forth below, Pierce Manufacturing provides the following warranty to the Buyer:

Coverage:	**The aerial hydraulic system components and seals shall be free from component or structural failures caused by defects in material and/or workmanship.**
Warranty Begins:	**The date of the original purchase invoice (issued when the product ships from the factory).**
Warranty Period Ends After:	**Five (5) Years and Three (3) Years**
Conditions and Exclusions: **See Also Paragraphs 2 thru 4**	**Pierce's obligation under this warranty is limited to repairing or replacing without charge, as Pierce may elect, the hydraulic lines, fittings, valves, seals, cylinders, filters, pumps, hydraulic motors, rotary actuators, or components which Pierce determines to have failed due to defective material and workmanship.** **This warranty shall not apply unless the aerial device is inspected in accordance with NFPA 1911 Standard for Inspection, Maintenance, Testing, and Retirement of In-Service Automotive Fire Apparatus and the applicable Pierce Operator and Maintenance Manuals.**

This limited warranty shall apply only if the product is properly maintained in accordance with Pierce's maintenance instructions and manuals and is used in service which is normal to the particular model. Normal service means service which does not subject the product to stresses or impacts greater than normally result from careful use. If the Buyer discovers a defect or nonconformity, it must notify Pierce in writing within thirty (30) days after the date of discovery, but in any event prior to the expiration of the warranty period. THIS LIMITED WARRANTY MAY NOT BE ASSIGNED OR OTHERWISE TRANSFERRED BY THE BUYER TO ANY SUBSEQUENT USER OR PURCHASER OR TO ANY OTHER PERSON OR ENTITY.

Notwithstanding anything to the contrary herein, Pierce makes no warranty whatsoever as to:

(a) any integral parts, components, attachments or trade accessories of or to the product that are not manufactured by Pierce, including but not limited to engines, transmissions, drivelines, axles, water pumps and generators; with respect to all such parts, components, attachments and accessories, Pierce shall assign to Buyer the applicable warranties, if any, made by the respective manufacturers thereof;

(b) any vehicle, chassis, or component, part, attachment or accessory damaged by misuse, neglect, fire, exposure to severe environmental or chemical conditions, acidic environment, improper maintenance, accident, crash, or force majeure such as natural disaster, lightning, earthquake, windstorm, hail, flood, war or riot;

(c) any vehicle, chassis or component, part, attachment or accessory that has been repaired, altered or assembled in any way by any person or entity other than Pierce which, in the sole judgment of Pierce, adversely affects the performance, stability or purpose for which it was manufactured; or

(d) products or parts which may in the ordinary course wear out and have to be replaced during the warranty period, including, but not limited to, tires, fluids, gaskets and light bulbs. Pierce assumes no responsibility for the assembly of its parts or subassemblies into finishing products or vehicles unless the assembly is performed by Pierce.

The original purchaser may void this warranty in part or in its entirety if the product is repaired or replaced (a) without prior written approval of the Pierce Customer Service Department; or (b) at a facility which has not been approved by Pierce as to technical capability. Any repairs, modifications, alterations or aftermarket parts added after manufacture without the authorization of Pierce may void this warranty.

2. DISCLAIMERS OF WARRANTIES

THE WARRANTY SET FORTH IN PARAGRAPH 1 IS THE SOLE AND EXCLUSIVE WARRANTY GIVEN BY PIERCE. PIERCE HEREBY DISCLAIMS AND EXCLUDES ALL OTHER WARRANTIES, WHETHER EXPRESS, IMPLIED OR STATUTORY, INCLUDING WITHOUT LIMITATION ANY WARRANTY OF MERCHANTABILITY, ANY WARRANTY OF FITNESS FOR A PARTICULAR PURPOSE, AND ANY WARRANTIES ARISING FROM COURSE OF DEALING OR USAGE OF TRADE.

3. BUYER'S EXCLUSIVE REMEDY.

If the product fails to conform to the warranty set forth in paragraph 1 during the warranty period, and such nonconformity is not due to misuse, neglect, accident or improper maintenance, Buyer must notify Pierce within the time period specified in paragraph 1, and shall make the product available for inspection by Pierce or its designated agent. At the request of Pierce, any allegedly defective product shall be returned to Pierce by Buyer for examination and/or repair. Buyer shall be responsible for the cost of such transportation, and for risk of loss of or damage to the product during transportation. Within a reasonable time, Pierce shall repair or replace (at Pierce's option and expense) any nonconforming or defective parts. Repair or replacement shall be made only by a facility approved in advance in writing by Pierce. THIS REMEDY SHALL BE THE EXCLUSIVE AND SOLE REMEDY FOR ANY BREACH OF WARRANTY.

4. EXCLUSION OF CONSEQUENTIAL AND INCIDENTAL DAMAGES.

Notwithstanding anything to the contrary herein or in any agreement between Pierce and Buyer, IN NO EVENT SHALL PIERCE BE LIABLE FOR ANY CONSEQUENTIAL, INCIDENTAL, SPECIAL, INDIRECT, OR PUNITIVE DAMAGES WHATSOEVER, WHETHER ARISING OUT OF BREACH OF CONTRACT, WARRANTY, TORT (INCLUDING NEGLIGENCE AND STRICT LIABILITY) OR OTHER THEORY OF LAW OR EQUITY, WITH RESPECT TO VEHICLES OR OTHER PRODUCTS SOLD BY PIERCE, OR THEIR OPERATION OR FAILURE TO OPERATE, OR ANY DEFECTS THEREIN, OR ANY UNDERTAKINGS, ACTS OR OMISSIONS RELATED THERETO, REGARDLESS OF WHETHER PIERCE HAS BEEN INFORMED OF THE POSSIBILITY OF ANY SUCH DAMAGES. Without limiting the generality of the foregoing, Pierce specifically disclaims any liability for property or personal injury damages, penalties, damages for lost profits or revenues, loss of vehicles or products or any associated equipment, cost of substitute vehicles or products, down-time, delay damages, any other types of economic loss, or for any claims by any third party for any such damages.

Note: Any Surety Bond, if a part of the sale of the vehicle as to which this limited warranty is provided, applies only to this Pierce Basic One Year Limited Warranty for such vehicle, and not to other warranties made by Pierce in a separate document (if any) or to the warranties (if any) made by any manufacturer (other than Pierce) of any part, component, attachment or accessory that is incorporated into or attached to the vehicle.

AMITY FIRE AND SAFETY, INC.
3750 CHESTNUT ROAD
ALBURTIS, PA 18011-0451
Phone: 610-966-3115
Fax: 610-965-6313

* STANDARD TEN YEAR WARRANTY *

(standard warranty is in effect for parts shipped after 4/15/10)

Telescopic Waterways

A. PRESHIPMENT TESTING All waterways fabricated by Amity are final inspected using the following pressure minimums:

1. Hydrostatic applications will be tested to 400 PSI unless specified otherwise on approved drawings. Operating pressures on installed systems are not to exceed 250 PSI at any point in the system. Warranty will be voided and Amity will not be held liable for failure and/or damage occurring from Water Hammering or freezing of water in any system.

B. COMPONENTS DESCRIPTION AND MAINTENANCE

1. All components are thoroughly greased at assembly. Since internally lubricated seals are used, regular greasing is not required. We recommend components not be greased at installation.
2. Slip Tube Assemblies may be greased at the Amity's regularly scheduled Aerial Inspections. The seals in the Slip Tube Assemblies are self-lubricating, so greasing is not mandatory. We do recommend a visual inspection of the Slip Tube Assembly while it is fully extended after initial installation, from that point on we recommend inspection every ten hours of aerial operation. If any deposits of aluminum appear, they are to be rubbed off using a Teflon scouring pad. Slip Tube Assemblies are designed to give long maintenance free service; however, like any product, problems may occur and periodic visual inspections will aid in determining if a potential problem exists and warrants a call to us. Care must be taken to keep debris off of extended tubes. We recommend wiping tubes with light oil (10 weight) or hydraulic oil after use, if tubes appear to have contamination on them. Under no circumstance are tubes to be cleaned with lacquer thinner, or any other solvent.

C. LIMITED WARRANTY, LIMITATIONS, CONDITIONS AND PROCEDURES REQUIRED.

1. Products are warranted to be free of defects in labor and/or materials for a period of ten years from the date of purchase from the Amity and shall be repaired or replaced at the sole option and expense of the Amity provided the products alleged to be defective was used for its intended normal use operation and subject to the following qualifications and limitations.
2. Any alteration of product without consent from Amity is strictly forbidden and shall void warranty.
3. No welding shall be performed on finished product.
4. No responsibility is assumed for any malfunctions or damages which are occasionally caused by foreign objects which may be ingested into water system such as, but not limited to stones, sand or metal chips.
5. Amity assumes responsibility for our product, which is defective only, and therefore, it will not assume responsibility for labor to either remove or install our product unless it agrees in writing to assume such responsibility.
6. Unless otherwise approved in writing by the Amity all returns of defective (or allegedly defective products) are at Purchaser's expense and must include a RGA number issued by the Amity.
7. All warranty claims must be presented at the time the problem occurs, or as soon as practical thereafter, either called or faxed to the Amity and include the numbers on the assembly's Amity's label with a detailed explanation of the difficulty in order for the matter to be appropriately evaluated and resolved.
8. Amity will not be held liable for damage incurred during shipment.
9. No responsibility shall be assumed for misuse or improper mounting, unreasonably use or abuse of the Product and or failure to provide or use improper maintenance, failure to follow written installation and use in instruction or any use other than the customary designed use.

THE REMEDIES PROVIDED IN THE ABOVE EXPRESS LIMITED WARRANTY AND ARE THE SOLE AND EXCLUSIVE REMEDIES AVAILABLE. NO OTHER EXPRESS WARRANTIES ARE MADE. ALL IMPLIED WARRANTIES, INCLUDING BUT NOT LIMITED TO ANY IMPLIED WARRANTY OF MERCHANTABILITY OR

FITNESS FOR A PARTICULAR PURPOSE OR USE ARE LIMITED IN DURATION AS SET FORTH ABOVE. IN NO EVENT SHALL THE AMITY ASSUME OR BE LIABLE FOR ANY INCIDENTAL OR CONSEQUENTIAL DAMAGES.

THE WITHIN DESCRIBED WARRANTY SHALL ONLY BE AFFORDED TO THE ORIGINAL PURCHASER OR FOR INCORPORATION INTO ANOTHER UNIT AND TO FIRST PURCHASER AS PART OF COMPLETED UNIT, HOWEVER, THE WARRANTY PERIOD OF TEN YEARS COMMENCES UPON INSTALLATION INTO FINAL ASSEMBLY WITH THE UNDERSTANDING IT IS INSTALLED WITHIN SIX MONTHS OF PURCHASE.

Dated: _____ ____, 20___

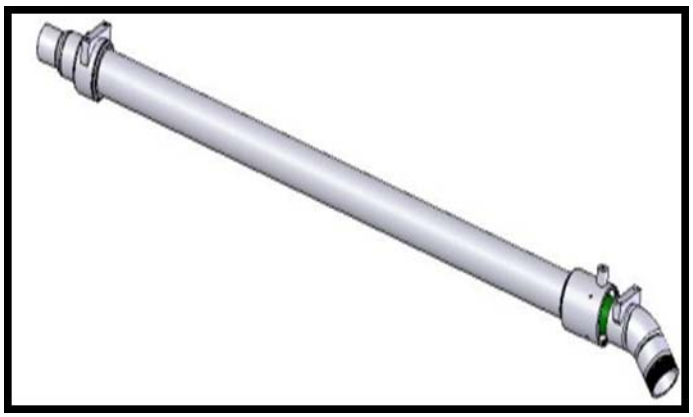

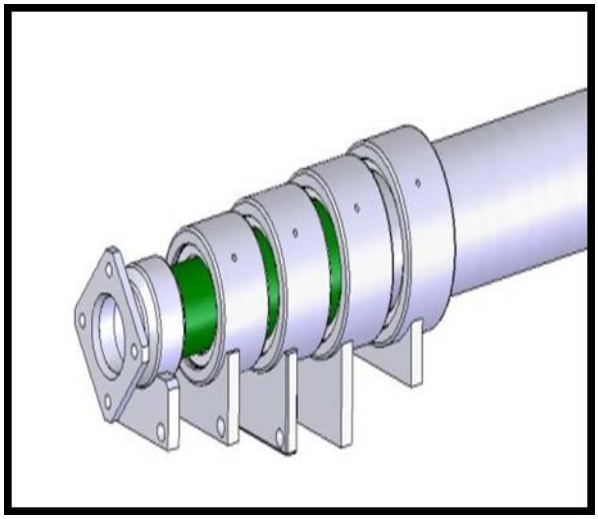

Fire and Rescue Apparatus

Four (4) Year Pro-Rated Paint and Corrosion Aerial Device

Limited Warranty

1. LIMITED WARRANTY

Subject to the limitations and exclusions set forth below, Pierce Manufacturing provides the following warranty to the Buyer:

Coverage:	**Aerial device shall be free from blistering, peeling, corrosion or any other adhesion defect caused by defective manufacturing methods or paint material selection for exterior surfaces.**
Warranty Begins:	**The date of the original purchase invoice (issued when the product ships from the factory).**
Warranty Period Ends After:	**Four (4) Years**
Conditions and Exclusions: **See Also Paragraphs 2 thru 4**	**This limited warranty is applicable to the vehicle in the following percentage costs of warranty repair, if any:** **Topcoat Durability & Appearance: Gloss, Color Retention & Cracking** **0-24 months 100%** **25-48 months 50%** **Integrity of Coating System: Adhesion, Blistering/Bubbling** **0-24 months 100%** **25-48 months 50%** **Corrosion: Dissimilar Metal and Crevice** **0-24 months 100%** **25-48 months 50%** **Corrosion Perforation** **0-24 months 100%** **25-48 months 50%** **This limited warranty applies only to exterior paint.** **Items not covered by this warranty include:** **(a) Damage from lack of maintenance and cleaning (proper cleaning and maintenance procedures are detailed in the Pierce operation and maintenance manual).** **(b) UV paint fade.**

This limited warranty shall apply only if the product is properly maintained in accordance with Pierce's maintenance instructions and manuals and is used in service which is normal to the particular model. Normal service means service which does not subject the product to stresses or impacts greater than normally result from careful use. If the Buyer discovers a defect or nonconformity, it must notify Pierce in writing within thirty (30) days after the date of discovery, but in any event prior to the expiration of the warranty period. THIS LIMITED WARRANTY MAY NOT BE ASSIGNED OR OTHERWISE TRANSFERRED BY THE BUYER TO ANY SUBSEQUENT USER OR PURCHASER OR TO ANY OTHER PERSON OR ENTITY.

Notwithstanding anything to the contrary herein, Pierce makes no warranty whatsoever as to:

(a) any integral parts, components, attachments or trade accessories of or to the product that are not manufactured by Pierce, including but not limited to engines, transmissions, drivelines, axles, water pumps and generators; with respect to all such parts, components, attachments and accessories, Pierce shall assign to Buyer the applicable warranties, if any, made by the respective manufacturers thereof;

(b) any vehicle, chassis, or component, part, attachment or accessory damaged by misuse, neglect, fire, exposure to severe environmental or chemical conditions, acidic environment, improper maintenance, accident, crash, or force majeure such as natural disaster, lightning, earthquake, windstorm, hail, flood, war or riot;

(c) any vehicle, chassis or component, part, attachment or accessory that has been repaired, altered or assembled in any way by any person or entity other than Pierce which, in the sole judgment of Pierce, adversely affects the performance, stability or purpose for which it was manufactured; or

(d) products or parts which may in the ordinary course wear out and have to be replaced during the warranty period, including, but not limited to, tires, fluids, gaskets and light bulbs. Pierce assumes no responsibility for the assembly of its parts or subassemblies into finishing products or vehicles unless the assembly is performed by Pierce.

The original purchaser may void this warranty in part or in its entirety if the product is repaired or replaced (a) without prior written approval of the Pierce Customer Service Department; or (b) at a facility which has not been approved by Pierce as to technical capability. Any repairs, modifications, alterations or aftermarket parts added after manufacture without the authorization of Pierce may void this warranty.

2. DISCLAIMERS OF WARRANTIES

THE WARRANTY SET FORTH IN PARAGRAPH 1 IS THE SOLE AND EXCLUSIVE WARRANTY GIVEN BY PIERCE. PIERCE HEREBY DISCLAIMS AND EXCLUDES ALL OTHER WARRANTIES, WHETHER EXPRESS, IMPLIED OR STATUTORY, INCLUDING WITHOUT LIMITATION ANY WARRANTY OF MERCHANTABILITY, ANY WARRANTY OF FITNESS FOR A PARTICULAR PURPOSE, AND ANY WARRANTIES ARISING FROM COURSE OF DEALING OR USAGE OF TRADE.

3. BUYER'S EXCLUSIVE REMEDY.

If the product fails to conform to the warranty set forth in paragraph 1 during the warranty period, and such nonconformity is not due to misuse, neglect, accident or improper maintenance, Buyer must notify Pierce within the time period specified in paragraph 1, and shall make the product available for inspection by Pierce or its designated agent. At the request of Pierce, any allegedly defective product shall be returned to Pierce by Buyer for examination and/or repair. Buyer shall be responsible for the cost of such transportation, and for risk of loss of or damage to the product during transportation. Within a reasonable time, Pierce shall repair or replace (at Pierce's option and expense) any nonconforming or defective parts. Repair or replacement shall be made only by a facility approved in advance in writing by Pierce. THIS REMEDY SHALL BE THE EXCLUSIVE AND SOLE REMEDY FOR ANY BREACH OF WARRANTY.

4. EXCLUSION OF CONSEQUENTIAL AND INCIDENTAL DAMAGES.

Notwithstanding anything to the contrary herein or in any agreement between Pierce and Buyer, IN NO EVENT SHALL PIERCE BE LIABLE FOR ANY CONSEQUENTIAL, INCIDENTAL, SPECIAL, INDIRECT, OR PUNITIVE DAMAGES WHATSOEVER, WHETHER ARISING OUT OF BREACH OF CONTRACT, WARRANTY, TORT (INCLUDING NEGLIGENCE AND STRICT LIABILITY) OR OTHER THEORY OF LAW OR EQUITY, WITH RESPECT TO VEHICLES OR OTHER PRODUCTS SOLD BY PIERCE, OR THEIR OPERATION OR FAILURE TO OPERATE, OR ANY DEFECTS THEREIN, OR ANY UNDERTAKINGS, ACTS OR OMISSIONS RELATED THERETO, REGARDLESS OF WHETHER PIERCE HAS BEEN INFORMED OF THE POSSIBILITY OF ANY SUCH DAMAGES. Without limiting the generality of the foregoing, Pierce specifically disclaims any liability for property or personal injury damages, penalties, damages for lost profits or revenues, loss of vehicles or products or any associated equipment, cost of substitute vehicles or products, down-time, delay damages, any other types of economic loss, or for any claims by any third party for any such damages.

Note: Any Surety Bond, if a part of the sale of the vehicle as to which this limited warranty is provided, applies only to this Pierce Basic One Year Limited Warranty for such vehicle, and not to other warranties made by Pierce in a separate document (if any) or to the warranties (if any) made by any manufacturer (other than Pierce) of any part, component, attachment or accessory that is incorporated into or attached to the vehicle.

Fire and Rescue Apparatus

Ten (10) Year Pro-Rated Paint and Corrosion Custom Body

Limited Warranty

1. LIMITED WARRANTY

Subject to the limitations and exclusions set forth below, Pierce Manufacturing provides the following warranty to the Buyer:

Coverage:	**Exterior surfaces of the body shall be free from blistering, peeling, corrosion or any other adhesion defect caused by defective manufacturing methods or paint material selection.**
Warranty Begins:	**The date of the original purchase invoice (issued when the product ships from the factory).**
Warranty Period Ends After:	**Ten (10) Years**
Conditions and Exclusions: **See Also Paragraphs 2 thru 4**	**This limited warranty is applicable to the vehicle in the following percentage costs of warranty repair, if any:** **Topcoat Durability & Appearance: Gloss, Color Retention & Cracking** **0-72 months 100%** **73-96 months 50%** **97-120 months 25%** **Integrity of Coating System: Adhesion, Blistering/Bubbling** **0-36 months 100%** **37-84 months 50%** **85-120 months 25%** **Corrosion: Dissimilar Metal and Crevice** **0-36 months 100%** **37-48 months 50%** **49-72 months 25%** **73-120 months 10%** **Corrosion Perforation** **0-120 months 100%** **This limited warranty applies only to exterior paint. Paint on the vehicle's interior is warranted only under the Pierce Basic One Year Limited Warranty.** **Items not covered by this warranty include:** **(a) Damage from lack of maintenance and cleaning (proper cleaning and maintenance procedures are detailed in the Pierce operation and maintenance manual).** **(b) UV paint fade.** **(c) Any cab not manufactured by Pierce.**

This limited warranty shall apply only if the product is properly maintained in accordance with Pierce's maintenance instructions and manuals and is used in service which is normal to the particular model. Normal service means service which does not subject the product to stresses or impacts greater than normally result from careful use. If the Buyer discovers a defect or nonconformity, it must notify Pierce in writing within thirty (30) days after the date of discovery, but in any event prior to the expiration of the warranty period. THIS LIMITED WARRANTY MAY NOT BE ASSIGNED OR OTHERWISE TRANSFERRED BY THE BUYER TO ANY SUBSEQUENT USER OR PURCHASER OR TO ANY OTHER PERSON OR ENTITY.

Notwithstanding anything to the contrary herein, Pierce makes no warranty whatsoever as to:

(a) any integral parts, components, attachments or trade accessories of or to the product that are not manufactured by Pierce, including but not limited to engines, transmissions, drivelines, axles, water pumps and generators; with respect to all such parts, components, attachments and accessories, Pierce shall assign to Buyer the applicable warranties, if any, made by the respective manufacturers thereof;

(b) any vehicle, chassis, or component, part, attachment or accessory damaged by misuse, neglect, fire, exposure to severe environmental or chemical conditions, acidic environment, improper maintenance, accident, crash, or force majeure such as natural disaster, lightning, earthquake, windstorm, hail, flood, war or riot;

(c) any vehicle, chassis or component, part, attachment or accessory that has been repaired, altered or assembled in any way by any person or entity other than Pierce which, in the sole judgment of Pierce, adversely affects the performance, stability or purpose for which it was manufactured; or

(d) products or parts which may in the ordinary course wear out and have to be replaced during the warranty period, including, but not limited to, tires, fluids, gaskets and light bulbs. Pierce assumes no responsibility for the assembly of its parts or subassemblies into finishing products or vehicles unless the assembly is performed by Pierce.

The original purchaser may void this warranty in part or in its entirety if the product is repaired or replaced (a) without prior written approval of the Pierce Customer Service Department; or (b) at a facility which has not been approved by Pierce as to technical capability. Any repairs, modifications, alterations or aftermarket parts added after manufacture without the authorization of Pierce may void this warranty.

2. DISCLAIMERS OF WARRANTIES

THE WARRANTY SET FORTH IN PARAGRAPH 1 IS THE SOLE AND EXCLUSIVE WARRANTY GIVEN BY PIERCE. PIERCE HEREBY DISCLAIMS AND EXCLUDES ALL OTHER WARRANTIES, WHETHER EXPRESS, IMPLIED OR STATUTORY, INCLUDING WITHOUT LIMITATION ANY WARRANTY OF MERCHANTABILITY, ANY WARRANTY OF FITNESS FOR A PARTICULAR PURPOSE, AND ANY WARRANTIES ARISING FROM COURSE OF DEALING OR USAGE OF TRADE.

3. BUYER'S EXCLUSIVE REMEDY.

If the product fails to conform to the warranty set forth in paragraph 1 during the warranty period, and such nonconformity is not due to misuse, neglect, accident or improper maintenance, Buyer must notify Pierce within the time period specified in paragraph 1, and shall make the product available for inspection by Pierce or its designated agent. At the request of Pierce, any allegedly defective product shall be returned to Pierce by Buyer for examination and/or repair. Buyer shall be responsible for the cost of such transportation, and for risk of loss of or damage to the product during transportation. Within a reasonable time, Pierce shall repair or replace (at Pierce's option and expense) any nonconforming or defective parts. Repair or replacement shall be made only by a facility approved in advance in writing by Pierce. THIS REMEDY SHALL BE THE EXCLUSIVE AND SOLE REMEDY FOR ANY BREACH OF WARRANTY.

4. EXCLUSION OF CONSEQUENTIAL AND INCIDENTAL DAMAGES.

Notwithstanding anything to the contrary herein or in any agreement between Pierce and Buyer, IN NO EVENT SHALL PIERCE BE LIABLE FOR ANY CONSEQUENTIAL, INCIDENTAL, SPECIAL, INDIRECT, OR PUNITIVE DAMAGES WHATSOEVER, WHETHER ARISING OUT OF BREACH OF CONTRACT, WARRANTY, TORT (INCLUDING NEGLIGENCE AND STRICT LIABILITY) OR OTHER THEORY OF LAW OR EQUITY, WITH RESPECT TO VEHICLES OR OTHER PRODUCTS SOLD BY PIERCE, OR THEIR OPERATION OR FAILURE TO OPERATE, OR ANY DEFECTS THEREIN, OR ANY UNDERTAKINGS, ACTS OR OMISSIONS RELATED THERETO, REGARDLESS OF WHETHER PIERCE HAS BEEN INFORMED OF THE POSSIBILITY OF ANY SUCH DAMAGES. Without limiting the generality of the foregoing, Pierce specifically disclaims any liability for property or personal injury damages, penalties, damages for lost profits or revenues, loss of vehicles or products or any associated equipment, cost of substitute vehicles or products, down-time, delay damages, any other types of economic loss, or for any claims by any third party for any such damages.

Note: Any Surety Bond, if a part of the sale of the vehicle as to which this limited warranty is provided, applies only to this Pierce Basic One Year Limited Warranty for such vehicle, and not to other warranties made by Pierce in a separate document (if any) or to the warranties (if any) made by any manufacturer (other than Pierce) of any part, component, attachment or accessory that is incorporated into or attached to the vehicle.

Fire and Rescue Apparatus

Three (3) Year Material and Workmanship
Goldstar® Gold Leaf Lamination

Limited Warranty

1. LIMITED WARRANTY

Subject to the limitations and exclusions set forth below, Pierce Manufacturing provides the following warranty to the Buyer:

Coverage:	**Each Goldstar® gold leaf lamination shall be free from defects in material and workmanship.**
Warranty Begins:	**The date of the original purchase invoice (issued when the product ships from the factory).**
Warranty Period Ends After:	**Three (3) Years**
Conditions and Exclusions: **See Also Paragraphs 2 thru 4**	**This warranty does not cover damage from lack of maintenance and cleaning (proper cleaning and maintenance procedures are detailed in the Pierce operation and maintenance manual).**

This limited warranty shall apply only if the product is properly maintained in accordance with Pierce's maintenance instructions and manuals and is used in service which is normal to the particular model. Normal service means service which does not subject the product to stresses or impacts greater than normally result from careful use. If the Buyer discovers a defect or nonconformity, it must notify Pierce in writing within thirty (30) days after the date of discovery, but in any event prior to the expiration of the warranty period. THIS LIMITED WARRANTY MAY NOT BE ASSIGNED OR OTHERWISE TRANSFERRED BY THE BUYER TO ANY SUBSEQUENT USER OR PURCHASER OR TO ANY OTHER PERSON OR ENTITY.

Notwithstanding anything to the contrary herein, Pierce makes no warranty whatsoever as to:

(a) any integral parts, components, attachments or trade accessories of or to the product that are not manufactured by Pierce, including but not limited to engines, transmissions, drivelines, axles, water pumps and generators; with respect to all such parts, components, attachments and accessories, Pierce shall assign to Buyer the applicable warranties, if any, made by the respective manufacturers thereof;

(b) any vehicle, chassis, or component, part, attachment or accessory damaged by misuse, neglect, fire, exposure to severe environmental or chemical conditions, acidic environment, improper maintenance, accident, crash, or force majeure such as natural disaster, lightning, earthquake, windstorm, hail, flood, war or riot;

(c) any vehicle, chassis or component, part, attachment or accessory that has been repaired, altered or assembled in any way by any person or entity other than Pierce which, in the sole judgment of Pierce, adversely affects the performance, stability or purpose for which it was manufactured; or

(d) products or parts which may in the ordinary course wear out and have to be replaced during the warranty period, including, but not limited to, tires, fluids, gaskets and light bulbs. Pierce assumes no responsibility for the assembly of its parts or subassemblies into finishing products or vehicles unless the assembly is performed by Pierce.

The original purchaser may void this warranty in part or in its entirety if the product is repaired or replaced (a) without prior written approval of the Pierce Customer Service Department; or (b) at a facility which has not been approved by Pierce as to technical capability. Any repairs, modifications, alterations or aftermarket parts added after manufacture without the authorization of Pierce may void this warranty.

2. DISCLAIMERS OF WARRANTIES

THE WARRANTY SET FORTH IN PARAGRAPH 1 IS THE SOLE AND EXCLUSIVE WARRANTY GIVEN BY PIERCE. PIERCE HEREBY DISCLAIMS AND EXCLUDES ALL OTHER WARRANTIES, WHETHER EXPRESS, IMPLIED OR STATUTORY, INCLUDING WITHOUT LIMITATION ANY WARRANTY OF MERCHANTABILITY, ANY WARRANTY OF FITNESS FOR A PARTICULAR PURPOSE, AND ANY WARRANTIES ARISING FROM COURSE OF DEALING OR USAGE OF TRADE.

3. BUYER'S EXCLUSIVE REMEDY.

If the product fails to conform to the warranty set forth in paragraph 1 during the warranty period, and such nonconformity is not due to misuse, neglect, accident or improper maintenance, Buyer must notify Pierce within the time period specified in paragraph 1, and shall make the product available for inspection by Pierce or its designated agent. At the request of Pierce, any allegedly defective product shall be returned to Pierce by Buyer for examination and/or repair. Buyer shall be responsible for the cost of such transportation, and for risk of loss of or damage to the product during transportation. Within a reasonable time, Pierce shall repair or replace (at Pierce's option and expense) any nonconforming or defective parts. Repair or replacement shall be made only by a facility approved in advance in writing by Pierce. THIS REMEDY SHALL BE THE EXCLUSIVE AND SOLE REMEDY FOR ANY BREACH OF WARRANTY.

4. EXCLUSION OF CONSEQUENTIAL AND INCIDENTAL DAMAGES.

Notwithstanding anything to the contrary herein or in any agreement between Pierce and Buyer, IN NO EVENT SHALL PIERCE BE LIABLE FOR ANY CONSEQUENTIAL, INCIDENTAL, SPECIAL, INDIRECT, OR PUNITIVE DAMAGES WHATSOEVER, WHETHER ARISING OUT OF BREACH OF CONTRACT, WARRANTY, TORT (INCLUDING NEGLIGENCE AND STRICT LIABILITY) OR OTHER THEORY OF LAW OR EQUITY, WITH RESPECT TO VEHICLES OR OTHER PRODUCTS SOLD BY PIERCE, OR THEIR OPERATION OR FAILURE TO OPERATE, OR ANY DEFECTS THEREIN, OR ANY UNDERTAKINGS, ACTS OR OMISSIONS RELATED THERETO, REGARDLESS OF WHETHER PIERCE HAS BEEN INFORMED OF THE POSSIBILITY OF ANY SUCH DAMAGES. Without limiting the generality of the foregoing, Pierce specifically disclaims any liability for property or personal injury damages, penalties, damages for lost profits or revenues, loss of vehicles or products or any associated equipment, cost of substitute vehicles or products, down-time, delay damages, any other types of economic loss, or for any claims by any third party for any such damages.

Note: Any Surety Bond, if a part of the sale of the vehicle as to which this limited warranty is provided, applies only to this Pierce Basic One Year Limited Warranty for such vehicle, and not to other warranties made by Pierce in a separate document (if any) or to the warranties (if any) made by any manufacturer (other than Pierce) of any part, component, attachment or accessory that is incorporated into or attached to the vehicle.