APPROVED PER Dan Johnson
9-17-19

44th & Virginia Force Main Replacement Project
City of Joplin, MO

CITY OF JOPLIN
ADDENDUM NUMBER 1

Issued to all Bid Document Holders of Record.

Date: September 17, 2019

Project: 44th and Virginia Force Main Replacement

This addendum forms a part of the contract described above. The original Contract Documents and any prior addenda remain in full force and effect as modified by the following that shall take precedence over any contrary provisions in the prior documents.

GENERAL CLARIFICATIONS:

1. Bid Opening remains Sept. 24, at 10 a.m.
2. See attached answers to all questions received to date following the mandatory Pre-Bid Conference on September 10, 2019; page A1 of this document.
3. This project is 100% financed through City of Joplin funds.

CONTRACT DOCUMENTS:

1. The Table of Contents page was modified to include Addendum No. 1.
2. Special Provisions have been significantly expanded for clarity, starting at Paragraph C, with new or modified text shown in dark red.
    - City of Joplin permits are clarified in Paragraph G.
    - MoDOT Permit Application – A blank form was attached for contractor's benefit.
3. Proposal - The list of pay items was expanded to address concerns and questions raised during the mandatory pre-bid conference.
4. Annual Wage Order No 26 – the entirety of the document is included in this Addendum.
5. The Plans were modified for clarity, and to revise the location of the receiving pit (encasement boring) in an effort to avoid existing utilities.

SPECIFICATIONS:

1. Exceptions and clarifications concerning the City's standard specifications, as applied to this project, can be found in Paragraph C of the Special Provisions document.

Chris Parker, PE
Civil Engineer II (Sanitary Sewers)

9/17/19
Date

Each bidder shall acknowledge receipt of this addendum by affixing his signature below by noting this addendum on his bid form, and by attaching this addendum to his bid.

ACKNOWLEDGEMENT
The undersigned acknowledges receipt of this addendum and the Bid submitted in accordance with information, instructions and stipulations set forth herein.

Bidder: _____

Signed By: _____

Date: _____

QUESTIONS RECEIVED BY CITY AFTER THE PRE-BID CONFERENCE

1. No fittings are shown on the plans. Do the specs indicate which materials are to be used?
   Answer: City standard specification section 4100, paragraph 2.4 indicates that fittings shall be ductile iron for PVC pressure sewer.

2. Will the new force main be connected to the existing manhole (MH) in the same cored opening as the existing force main?
   Answer: No, a new connection shall be made. The existing force main must remain in service until the new force main is accepted by the City.

3. Will the wet wells need to be vactored out by a pump truck during lift station shut downs?
   Answer: Yes, at the contractor's cost, and in full coordination with City staff; see note "E" in the original Special Provisions document.

4. Where should the pump truck take the sewage from the lift station?
   Answer: Discharging it into a nearby MH is fine, as long as it downstream from the MH in 44th Street, west of S. Main Street.
   - The MH chosen for these discharges must not conflict with any detours.
   - The Contractor must coordinate with City staff prior to and during these operations.

   Alternatively, the contractor may choose to haul it to the Turkey Creek Wastewater Treatment Plant, at no additional expense to the City.

44th and Virginia Force Main Replacement

Table of Contents

1. Notice to Contractors
2. Bidder's Checklist
3. ~~Special Provisions~~ [superseded by Addendum #1]
4. ~~Proposal~~ [superseded by Addendum #1]
5. City Contract
6. Contractor's Performance Bond
7. Contractor's Payment Bond
8. Statement of Anti-Collusion
9. ~~State Wage Determinations~~ [superseded by Addendum #1]
10. Exhibit A - Notification of Work
11. Exhibit B - Trash Map
12. ~~Plans~~ [superseded by Addendum #1]
13. Addendum No. 1
    a. Summary and Contractor Acknowledgement
    b. Table of Contents, Revised
    c. Special Provisions, Revised
        - Footer: "3 - SPECIAL PROVISIONS _ 44TH AND VIRGINIA FORCE MAIN REPLACEMENT - ADD1"
    d. MoDOT Permit Application - blank
    e. Proposal, Revised
        - Footer: "4 - PROPOSAL _ 44th and Virginia Force Main Replacement – Add1"
    f. Annual Wage Order No 26 – the entirety of the document is included
    g. Plans (Sheets 1 - 8)
        - Revision: Addendum #1, dated 9-17-19

SPECIAL PROVISIONS

Project: 44th and Virginia Force Main Replacement

A. Wage rates for this project shall be in accordance with the most current wage rate determination made by the Industrial Commission of Missouri on file in the Department of Public Works. Contractor will use the Division of Labor Standards Form LS-57 to report all wages.

Missouri Law, 292.675 RSMO, requires the awarded contractor and its subcontractor(s) to provide a ten-hour occupational safety and health administration (OSHA) construction safety program (or a similar program approved by the Missouri Department of Labor and industrial relations as a qualified substitute) for their on-site employees (Laborers, workmen, drivers, equipment operators, and craftsmen) who have not previously completed such a program and are directly engaged in actual construction of the improvement (or working at a nearby or adjacent facility used for construction of the improvement), The awarded contractors and its subcontractor(s) shall require all such employees to complete this ten-hour program, pursuant to 292.675 RSMO, unless they hold documentation on their prior completion of said program. Penalties for non-compliance include contractor forfeiture to the City of Joplin in the amount of $2,500, plus $100 per contractor and subcontractor employee for each calendar day such employee is employed beyond the elapsed time period for required program completion under 292.675 RSMO

The successful bidder will have to sign an agreement that they are enrolled and participating in a Federal Work Authorization Program ("FWAP") that ensures that all of its employees or agents or subcontractors have the legal right to work in the United States, as defined in 8 U.S.C. 1324a(h)(3) and RSMo § 285.525-285.555, and that it will maintain this compliance for the entire duration of its contract with the City of Joplin, and will provide an Affidavit of Compliance to the City stating the same.

B. Contractors are cautioned that unbalanced bids can be rejected.

C. All work shall be in accordance with the City of Joplin Standard Specifications, latest edition available on the City's website, unless otherwise noted on the plans, or as indicated below:

1) Pay Item No 2 – 6-inch PVC Force Main (C-900 DR-18)

a) Additional requirements to the City of Joplin's specification Section 4100 – SANITARY SEWER MAIN, the costs of which are to be included in the contract bid price for this item, are as follows:

- Warning Tape – Provide a 3" wide APWA compliant warning tape, which shall read, "CAUTION BURIED SEWER LINE BELOW." To be installed continuously within the trench backfill, at a depth between 12 and 24 inches above the top of pipe, per Specification Section 4100.3.6.

b) Clarification of requirements already contained within the City specifications:

- In the second paragraph of Specification Section 4100.3.6, tracer wire requirements can be found as part of pipe laying of force mains.
- Except as otherwise noted, no separate payment will be made for trenching, bedding, or backfill. Note: new pay items include 1) trench excavation in rock; 2) topsoil, seeding and mulching for grassy areas disturbed during the work.

- Two (2) 45-degree bends may be substituted for a single 90-degree bend, at the contractor's discretion. However, all bends, regardless of the angle of deflection, shall be supported by thrust blocks, per Specification Section 4100.3.6.
- Per Specification Section, 1700, subparagraphs 2.3, 3.10, and 3.11, backfill within all public Rights-of-Way shall be "crushed stone or gravel" –including in grassy areas, which are to receive a cap of six (6) inches of compacted top soil, along with seeding and mulching.

2) Pay Item No 3 – Horizontal Directional Drilling for a 10-inch Steel Encasement Pipe, including spacers
   a) Exceptions to the City of Joplin's specification Section 1600 – TUNNELING, BORING OR JACKING" are as follows:
      - Casing diameter shown on the plans (< 16 inches) shall have minimum wall thickness of 0.188 inches (per MoDOT's Figure 180.2, as shown on the "Utility Vertical Depth / Encasement Requirements on MoDOT R/W" document).
      - Bid price shall include 1) Smooth walled, and welded steel pipe; 2) all spacers installed at intervals not exceeding the manufacturer's recommendations or specified in the contract documents, whichever is less.
      - Measurement shall be made for payment on this bid item, complete, accepted, and in place, at the contract unit price in the Proposal.
   b) Clarification of requirements already imbedded in the meaning of City specifications:
      - No geotechnical investigations were performed for this project. Boring through rock will not be measured for payment.

3) Pay Item No 4 - Connection to the Existing Lift Station
   a) This pay item shall include all labor, materials and equipment, and the performance of all operations necessary for the installation of new ductile iron pipe immediately outside of, into, and inside the existing lift station, as shown on the plans, as well as, the installation of fittings to shut off flow through the existing force main.

   b) All DIP pipe and fittings shall be treated, per the information below:
      i. Interior lined with a ceramic epoxy (Protecto 401, or equivalent);
      ii. Exterior encased in 8-mil polyethylene tubes or sheets, except for those installed inside the lift station.
   c) The contractor shall reattach the lift station fencing at own cost, restoring its existing condition. No new fencing is required for this project.

   d) Within the existing lift station, it shall be the contractor's responsibility to bear all costs associated with moving equipment and materials down into the dry pit where the two pumps are located. There is a "ship ladder" down into the dry pit from the main floor of the lift station; the lift station detail sheets also indicate an existing trolley beam, centered over the pumps, with east-west movement. No improvements to this functionality are included in this project.

4) Pay Item No 6 - Pavement Repair

a) The City's Standard Detail "CONC PVMT REPAIR" (SAN-05) indicates 2" of "CLEAN STN BASE" is to be installed under the concrete. Per Specification Section 1700.3.12, this 2-inch layer is to be City standard base rock, free of deleterious materials.

5) Pay Item No 10 - Trench Excavation in Rock

a) No geotechnical investigations were performed for this project. Trenching through rock will be measured and paid for separately.

b) An estimated quantity is included in the Proposal. Actual quantities will be measured in strict coordination with City inspection staff.

6) Pay Item No 11 - Contaminated Soil Removal

a) No excavated material is to be hauled off-site without first being tested for heavy metal contamination (primarily, lead). Any of the excess excavated material that exceeds the established heavy metals thresholds shall be hauled to the designated repository for proper disposal; said repository is located 0.3 miles north of the intersection of West 7th Street and Malang Road, Joplin, Missouri.

b) Costs:

i. Soil testing can be performed by the City of Joplin with proper notification.

ii. Transportation and disposal of all contaminated soil shall be measured per cubic yard of deposited material at the location described in this specification. Payment shall be at the unit price stated in the Proposal and shall constitute full payment for all earthwork, loading and unloading, hauling, disposal, water, tools, equipment, labor, and incidentals necessary to complete this work.

iii. Since the quantity of contaminated soil is unknown, this pay item in the Proposal includes an estimated quantity for the purpose of comparing bids. The unit price set forth in the Bid Schedule for the transportation and disposal of contaminated material shall not be adjusted based on the actual quantity. The final quantity and contract price shall be adjusted based upon the actual volume of contaminated material disposed.

7) Pay Item No. 15, 16, and 17 – Traffic Control

a) No. 15: Changeable Message Boards (CMBs) – This pay item shall include all costs for CMBs on the job, when required. See paragraph F.1, below.

b) No. 16: Street Closure – This pay item shall include all costs for street closure and detour signage.

c) No. 17: General Utility Work – This pay item shall include all other costs for traffic control required on the job, including general signage for work inside the public right-of-way.

D. Construction must follow the public notification procedure.

E. The lift station pumping raw sewage must remain in service during the construction, except for brief periods of time, in strict coordination with the City of Joplin's Wastewater Maintenance staff. When such scenarios are granted approval by the Director of Public Works, the contractor

shall bear both the cost to haul off the sewage flowing into the lift station and the responsibility to dispose of it at one of the City's wastewater treatment plants in a manner consistent with the requirements of the City's National Pollutant Discharge Elimination System permits.

F. Traffic control shall be the responsibility of the contractor and shall be in accordance with current MUTCD requirements. Temporary Traffic Control Plans (TTCPs) must be submitted to the corresponding agency and a permit from said agency must be obtained prior to setting up temporary traffic control items in and around the work zone.

1) Changeable Message Boards (CMBs) – these shall be required under the following circumstances:

a) Starting 2 business days prior the initiation of the work, to alert the public.

b) Starting 2 business days prior to, and during, any road closure.

G. Permits vary by jurisdictional agency, as follows:

1) S. Main Street and Old Main Street are under the jurisdiction of the Missouri Department of Transportation (MoDOT).

a) To obtain a permit from MoDOT, it shall be the responsibility of the contractor to submit a TTCP and the permit application for MoDOT approval, with the City signing the application as the Owner.

b) Bonding requirements can be found in the blank permit application, enclosed as part of this Addendum. Refer to the Table of Contents page.

2) 44th Street is under the jurisdiction of the City of Joplin.

a) Permits must be purchased from the Building Department, 4th Floor of City Hall, 602 S. Main Street.

b) Permits required for this project ~~may~~ include:

i. Driveway permit, residential

- COST: the $50 per each fee shall be included in the unit bid price for driveway replacement
- PLANS: See City's standard drawing ST-08, "TYPE A DRIVEWAY WITH NO SIDEWALK"
  - Inspection of this work shall be scheduled following City procedures, by calling the Building Department at ext. 521.

ii. Road Closure permit. Two scenarios are described below:

a - At W. 44th Street - It is anticipated that this street will need to be shut down to facilitate installation of the new force main, from the receiving pit to the existing manhole. Traffic shall be detoured to W. 43rd and Old Main Street with MUTCD-compliant signage.

- COST: the fee is waived;
- PLANS: The contractor shall submit TTCPs for review and approval of road closure signage.

b - At no other intersections will the City allow road closures. Work is to be done one half of the roadway width at a time. One lane of traffic, at a

minimum, shall be kept open during operations; after hours, two-way traffic shall be provided.

iii. Excavation permit – not required.

DIVISION OF ENGINEERING
DEPARTMENT OF PUBLIC WORKS

Form No. M-460 (Rev.10-15)

Print Form

MISSOURI HIGHWAYS AND TRANSPORTATION COMMISSION
PERMIT TO WORK ON RIGHT OF WAY
LOCAL GOVERNMENT PROJECTS

District _____ _____ (Type of Work) Permit No. _____

Route_____ County ____

City _____

Inspector _____ Issued _____ Log Points _____

Phone _____ Expires _____ GPS Begins N ___ W __

RMS _____ Released: _____ GPS Ends N ___ W __

Speed Limit _____ mph

Intersection/Stopping Sight Distance

Northbound/Eastbound ☐ NB ☐ EB _____ ISD ft. _____ SSD ft.

Southbound/Westbound ☐ SB ☐ WB _____ ISD ft. _____ SSD ft.

Location of work on State Highway right of way along the_____ Side. _____

_____ from _____

(State highway, County road, City street or County Line)

Description of work:

_____

_____

_____

_____

_____

_____

_____

_____

_____

_____

_____

_____

_____

_____

By signing this form, the applicant agrees to all provisions of this form, including the General Provisions attached hereto and incorporated by reference.

_____ (Signature) (Date)	_____ (Signature) (Date)
_____ (Print or Type Name)	_____ (Print or Type Name)
_____ (Applicant)	_____ (Applicant's Contractor)
_____ (Address)	_____ (Address)
_____ MO ___ _____ (City State Zip-code)	_____ MO _____ (City State Zip-code)
(Telephone Number) _____	(Telephone Number) _____
(Email Address) _____	(Email Address) _____

Surety deposit required. None ☐ , bond # _____ , check # _____ Amount _____

Transmittal Number _____ Make check payable to: **Director of Revenue Credit Road Fund**

For Office use only

Date: _____ By: _____

(Rev. 10-15)

GENERAL PROVISIONS

Section 1. The signing of this form binds the applicant to the terms of this permit. If signed by Applicant's contractor or that contractor's authorized representative, the contractor and any subcontractors will be held jointly responsible for all of the requirements of this permit until it is released by the District Engineer or the District Engineer's representative. Applicant agrees to keep a copy of the permit and an approved plan on the job site.

Section 2. Construction material and equipment may be on the right of way only during the period of actual construction providing it is not on the roadway shoulders, in the ditch or blocking sight distance. Roadway ditches, culverts and other such devices used to carry surface run-off will be kept open, free and clear at all times.

Section 3. Applicant agrees that construction inspection will be provided by Applicant to assure compliance with the permit.

Section 4. Applicant shall provide adequate preliminary engineering including planning, and coordination with all concerned parties to:

(a) Confirm their contractor knows the rules and limitations for installations on highway right of way.
(b) Provide preinstallation meetings to all parties on major installations.
(c) Designate a point of contact who shall be available 24 hours per day, 7 days per week while the permittee is present on state highway rights of way and shall be capable of correcting any deficiencies in accordance with Missouri Standard Specifications for Highway Construction including, but not limited to Section 616.
(d) Include the name and telephone numbers of the design engineer and construction manager, as well as the dimension of the facility from the right of way line on the permit.

Section 5. Prior to beginning work, the applicant will request from the established Missouri One-Call System, the location of all utilities on the right of way.

Section 6. Applicant will contact MoDOT 48 hrs prior to any lane closure or 14 calendar days prior to the imposition of height, width, and weight restrictions. Lane closure dates may be rescheduled and/or land closure times may be shifted to off-peak and/or nighttime hours to minimize traffic backups. Schedule multiple tasks in a single work zone if possible.

Section 7. All work covered under this permit is to be in accordance with the Missouri Standard Specifications for Highway Construction, Missouri Standard Plans for Highway Construction, and The Manual on Uniform Traffic Control Devices (MUTCD current edition) where applicable. All utility facilities will be installed and located and all other work performed in accordance with the with Code of State Regulations, Title 7, Division 10, Chapter 3, *Utility and Private Line Location and Relocation* and other policies of the Missouri Department of Transportation.

Section 8. No advertising signs or display material of an advertising nature is to be placed on or to extend over onto the right of way as covered in Section 227.220 R.S.Mo.

Section 9. To the extent allowed or imposed by law, the Applicant agrees to hold harmless the Commission, its officers and employees from all liability, judgments, costs, expenses and claims growing out of damages of any nature whatsoever, to any person or property arising out of performance or non-performance of said work, or existence of said improvements. The Applicant shall carry commercial general liability insurance and commercial automobile liability insurance from a company authorized to issue insurance in Missouri, and to name the Commission, and MoDOT and its employees, as additional named insured in amounts sufficient to cover the sovereign immunity limits for Missouri public entities as calculated by the Missouri Department of Insurance, Financial Institutions and Professional Registration, and published annually in the Missouri Register pursuant to Section 537.610 R.S. Mo

Section 10. All costs incurred due to the issuance of this permit shall be borne by the Applicant, the Applicant's successors, and assigns.

Section 11. It is understood that in granting this permit the Commission waives none of its power or rights to direct the removal, relocation, and/or proper maintenance in the future of anything within the right of way of the state highway at no cost to the Commission.

Section 12. The Applicant's deposit or bond may be held until the work has been completed and has been approved by the District Engineer or the District Engineer's representative. The Applicant agrees that the Commission may, after the expiration date of this permit or extension thereof, use as much of the deposit as may be necessary to restore, correct, or complete any and all work started or done by the Applicant by whatever means the Commission deems necessary. The Commission may use the deposit to correct any hazard which the Applicant/contractor does not correct upon notification.

Section 13. The obtaining of this permit does not relieve the Applicant of the responsibility for obtaining other permits required by this or any other agency having jurisdiction.

Section 14. For any land disturbance activity, the Applicant shall install erosion and sediment control measures as necessary to prevent pollution of streams, lakes, ponds and wetlands and to prevent silt from leaving MoDOT right of way. The Applicant agrees to restore vegetation with seed and mulch, sodding, or other approved methods, prior to removal of sediment control devices. The Commission is under a federal order, under Case No. 15-4069, U.S. District Court of the Western District of Missouri, and all projects including applicant's projects that include land disturbance activities of greater than one (1) acre on Commission right of way are subject to this order. See www.modot.org/business/contractor_resources/LandDisturbanceItems.htm for full requirements.

Section 15. No driveway or improvement constructed on the highway right of way shall be altered or relocated without permission of the District Engineer or the District Engineer's representative.

PROPOSAL

THE UNDERSIGNED hereby proposes to furnish the labor and material for:

44th & Virginia Force Main Replacement

In the City of Joplin, Missouri, according to the general specifications for such work on file in the office of the City Engineer and Director of Public Works, together with the terms and conditions stipulated in the general contract forms, now adopted by the City of Joplin, as advertised to be let on the 24th day of September, 2019 at 10:00 a.m. at the following prices to-wit:

Item No.	***Item Description***	***Unit***	***Quantity***	***Unit Price***	***TOTAL***
1	Mobilization	LS	1	$	$
2	6-inch PVC Force Main (C-900 DR-18)	LF	944	$	$
3	Horizontal Directional Drilling for a 10-inch Steel Encasement Pipe, including spacers	LF	240	$	$
4	Connection to the Existing Lift Station	LS	1	$	$
5	Connection to Gravity MH	EA	1	$	$
6	Pavement Repair	SY	10	$	$
7	Standard Curb and Gutter	LF	12	$	$
8	MODOT Type 3 Rock Ditch Liner	SY	15	$	$
9	Witness Post	EA	4	$	$
10	Trench Excavation in Rock	CY	30	$	$
11	Contaminated Soil Removal	CY	10	$	$
12	Removals (trees, pavement, clearing & grubbing, etc.)	LS	1	$	$
13	6-inch Topsoil, Seeding & Mulching	SF	1,250	$	$
14	Concrete Driveway Approach	EA	1	$	$
15	Traffic Control - CMBs (Changeable Message Boards)	SIGN-DAY	4	$	$
16	Traffic Control - Street Closure	LS	1	$	$

17	Traffic Control - General Utility Work	LS	1	$	$
			Total Bid	**$ _____**	

TOTAL BID AMOUNT

Project award shall be based upon the bid amount as described in contract documents.

The undersigned agrees to enter into a contract within ten (10) days from Notice of Award should this proposal be accepted, and enter into bonds with good and sufficient securities, to complete the work on or before a date to be specified in the Notice to Proceed. Should the undersigned fail to complete the work within the allowed time frame, a penalty per calendar day thereafter shall be instituted, as indicated in the Agreement between the City of Joplin and the contractor, the amount to be deducted from the contract price. In order to pay all labor employed and material used in connection with this work and to adjust all claims or liens that may arise in consequence of said work, to the satisfaction of the Director of Public Works, above said bonds shall also indemnify and save harmless the said City from all damages or injuries to any person or persons, either in the employ of the contractor, his agents, servants or employees.

In the event of the failure of the undersigned to enter into such contract within the stipulated timeframe mentioned above, then the deposit or certified check of five percent (5%) of the total bid amount as surety is therefore forfeited to the City of Joplin.

Dated this _____ day of _____, 2019.

Company _____

Complete Address _____

_____

By (signature) _____

Missouri
Division of Labor Standards
WAGE AND HOUR SECTION

MICHAEL L. PARSON, Governor

Annual Wage Order No. 26

Section 073
NEWTON COUNTY

In accordance with Section 290.262 RSMo 2000, within thirty (30) days after a certified copy of this Annual Wage Order has been filed with the Secretary of State as indicated below, any person who may be affected by this Annual Wage Order may object by filing an objection in triplicate with the Labor and Industrial Relations Commission, P.O. Box 599, Jefferson City, MO 65102-0599. Such objections must set forth in writing the specific grounds of objection. Each objection shall certify that a copy has been furnished to the Division of Labor Standards, P.O. Box 449, Jefferson City, MO 65102-0449 pursuant to 8 CSR 20-5.010(1). A certified copy of the Annual Wage Order has been filed with the Secretary of State of Missouri.

Original Signed by
Taylor Burks, Director
Division of Labor Standards

Filed With Secretary of State: **March 8, 2019**

Last Date Objections May Be Filed: **April 8, 2019**

Prepared by Missouri Department of Labor and Industrial Relations

OCCUPATIONAL TITLE	** Date of Increase	Basic Hourly Rates
Asbestos Worker		$18.86
Boilermaker		$23.11*
Bricklayer		$23.11*
Carpenter		$37.33
Lather		
Linoleum Layer		
Millwright		
Pile Driver		
Cement Mason		$23.11*
Plasterer		
Communications Technician		$23.11*
Electrician (Inside Wireman)		$42.28
Electrician Outside Lineman		$23.11*
Lineman Operator		
Lineman - Tree Trimmer		
Groundman		
Groundman - Tree Trimmer		
Elevator Constructor		$23.11*
Glazier		$23.11*
Ironworker		$23.11*
Laborer		$32.80
General Laborer		
First Semi-Skilled		
Second Semi-Skilled		
Mason		$23.11*
Marble Mason		
Marble Finisher		
Terrazzo Worker		
Terrazzo Finisher		
Tile Setter		
Tile Finisher		
Operating Engineer		$30.25
Group I		
Group II		
Group III		
Group III-A		
Group IV		
Group V		
Painter		$35.17
Plumber		$23.11*
Pipe Fitter		
Roofer		$23.11*
Sheet Metal Worker		$23.11*
Sprinkler Fitter		$23.11*
Truck Driver		$23.11*
Truck Control Service Driver		
Group I		
Group II		
Group III		
Group IV		

*The Division of Labor Standards received less than 1,000 reportable hours as required by RSMo 290.257.4(b). Public works contracting minimum wage is established for this occupational title using data provided by Missouri Economic Research and Information Center, in accordance with RSMo 290.257.2.

Heavy Construction Rates for
NEWTON County

Section 073

OCCUPATIONAL TITLE	** Date of Increase	Basic Hourly Rates
Carpenter		$23.11*
Millwright		
Pile Driver		
Electrician (Outside Lineman)		$23.11*
Lineman Operator		
Lineman - Tree Trimmer		
Groundman		
Groundman - Tree Trimmer		
Laborer		$39.11
General Laborer		
Skilled Laborer		
Operating Engineer		$45.34
Group I		
Group II		
Group III		
Group IV		
Truck Driver		$23.11*
Truck Control Service Driver		
Group I		
Group II		
Group III		
Group IV		

Use Heavy Construction Rates on Highway and Heavy construction in accordance with the classifications of construction work established in 8 CSR 30-3.040(3).

Use Building Construction Rates on Building construction in accordance with the classifications of construction work established in 8 CSR 30-3.040(2).

If a worker is performing work on a heavy construction project within an occupational title that is not listed on the Heavy Construction Rate Sheet, use the rate for that occupational title as shown on the Building Construction Rate Sheet.

*The Division of Labor Standards received less than 1,000 reportable hours as required by RSMo 290.257.4(b). Public works contracting minimum wage is established for this occupational title using data provided by Missouri Economic Research and Information Center, in accordance with RSMo 290.257.2.

OVERTIME
and
HOLIDAYS

OVERTIME

For all work performed on a Sunday or a holiday, not less than twice (2x) the prevailing hourly rate of wages for work of a similar character in the locality in which the work is performed or the public works contracting minimum wage, whichever is applicable, shall be paid to all workers employed by or on behalf of any public body engaged in the construction of public works, exclusive of maintenance work.

For all overtime work performed, not less than one and one-half (1½) the prevailing hourly rate of wages for work of a similar character in the locality in which the work is performed or the public works contracting minimum wage, whichever is applicable, shall be paid to all workers employed by or on behalf of any public body engaged in the construction of public works, exclusive of maintenance work or contractual obligation. For purposes of this subdivision, **"overtime work"** shall include work that exceeds ten hours in one day and work in excess of forty hours in one calendar week; and

A thirty-minute lunch period on each calendar day shall be allowed for each worker on a public works project, provided that such time shall not be considered as time worked.

HOLIDAYS

January first;
The last Monday in May;
July fourth;
The first Monday in September;
November eleventh;
The fourth Thursday in November; and
December twenty-fifth;

If any holiday falls on a Sunday, the following Monday shall be considered a holiday.

44th & Virginia
Force Main Replacement

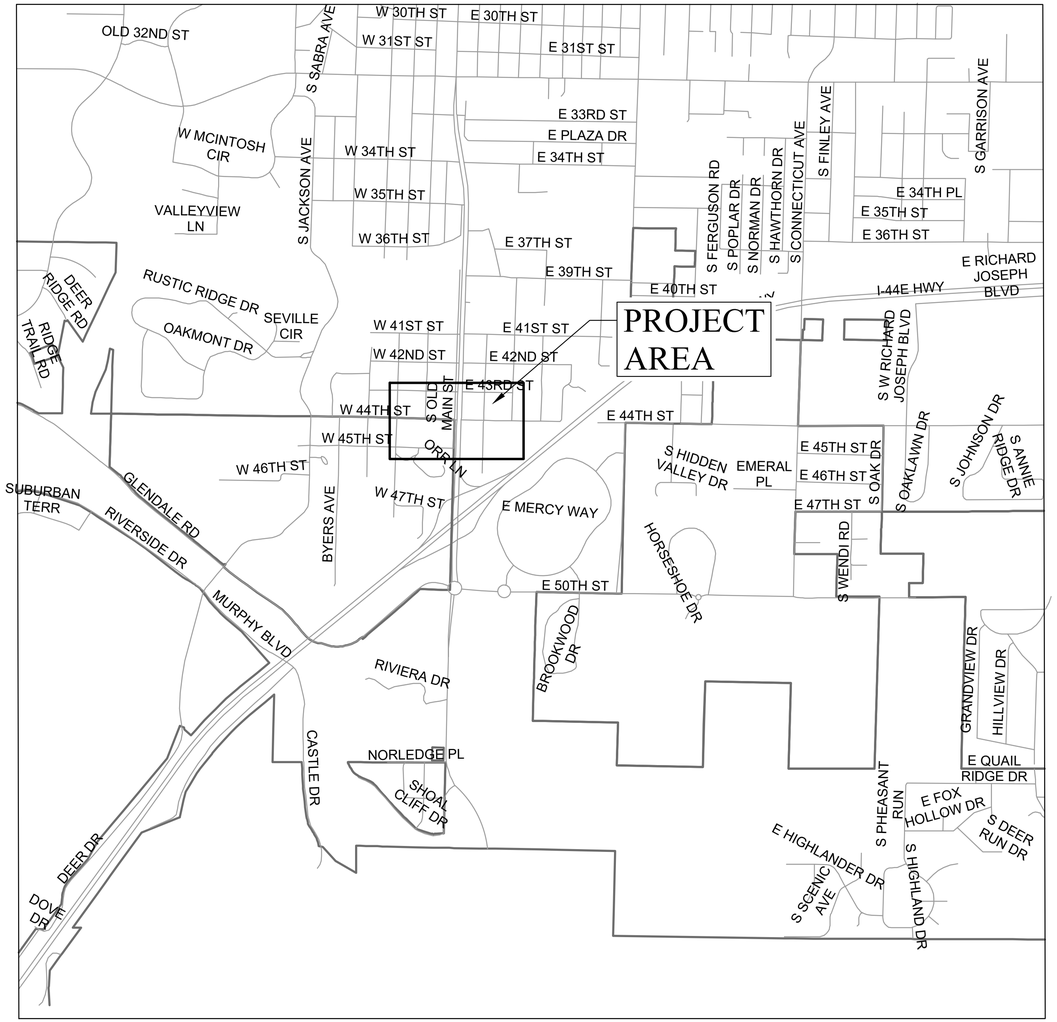

LEGEND

PS / PS	PRESSURE SEWER
C / C	COMMUNICATION LINE
GAS / GAS	GAS LINE
P / P	POWER LINE
W / W	WATER LINE
SW / SW	STORM WATER
SS / SS	SANITARY SEWER LINE
	STREET REPAIR
	DITCH LINER
	BORE PIT
	DRIVEWAY APPROACH
	WITTNESS POST

B.O.C. = BACK OF CURB

U.N.O. = UNLESS NOTED OTHERWISE

GENERAL NOTES:

1. CONTRACTOR SHALL, AT HIS EXPENSE, SET & MAINTAIN ALL LINE & GRADE STAKES.
2. CONTRACTOR SHALL GRADE ALL EXISTING STREETS, ALLEYS, & DRIVES TO MEET NEW CONST.
3. CONTRACTOR SHALL FIELD VERIFY ALL UTILITY LOCATIONS BEFORE BEGINNING NEW CONST.
4. ALL WORK SHALL CONFORM TO THE CITY OF JOPLIN STD SPECS UNLESS OTHERWISE NOTED.
5. ALL WORK SHALL BE IN ACCORDANCE WITH THE WORK ZONE SAFETY GUIDELINES OF PART VI OF THE MUTCD & WITH THE BARRICADING SECTION OF THE CITY OF JOPLIN SAFETY MANUAL.
6. ALL PEDESTRIAN FACILITIES SHALL CONFORM TO THE APPLICABLE REQUIREMENTS OF THE ADA.
7. CONTRACTOR SHALL, AT HIS EXPENSE, PROVIDE ACCESS TO PRIVATE PROPERTY AT ALL TIMES.
8. CONTRACTOR SHALL, AT HIS EXPENSE, RETAIN THE SERVICES OF A PLS LICENSED IN MISSOURI, WHO SHALL BE RESPONSIBLE FOR RESTORING ANY INCIDENTALLY DAMAGED SURVEY MONUMENTS NOT SCHEDULED FOR REMOVAL AS PART OF CONST PROJECT. CONTRACTOR SHALL NOTIFY THE CITY OF JOPLIN OF ANY MONUMENTS DAMAGED BY ANY OUTSIDE PARTY.
9. IF AT ANY POINT DURING THE INSTALLATION OF THE FORCE MAIN THE UTILITY THE FORCE MAIN IS CROSSING UNDER IS CLOSER THEN 2 FEET TO THE NEW FORCE MAIN THEN THE CONTRACTOR WILL NEED TO CONCRETE ENCASE THE FORCE MAIN TO ENSURE THAT THERE IS NO CROSS CONTAMINATION BETWEEN THE 2 UTILITIES.
10. FORCE MAIN TO MAINTAIN A MINIMUM COVER OF 42" U.N.O. ON PROFILE

MISSOURI ONE CALL SYSTEM, INC. 1-800-344-7483 STOP - CALL BEFORE YOU DIG!

44th & Virginia Lift Station coty.dwg

CITY OF Joplin

CITY OF JOPLIN, MISSOURI
DEPT OF PUBLIC WORKS
DIVISION OF ENGINEERING

ADDRESS: 602 S MAIN ST 64801
PH NO: 417-624-0820 EXT 530
FAX NO: 417-625-4738
E-MAIL: CPARKER@JOPLINMO.ORG

REV DATE:	REVISION:
9-16-19	ADDENDUM #1

SVYD BY: N/A
PNT FILE: N/A.TXT
SVY DATE: N/A
ENGINEER: PARKER

ACAD DWG FILE & PATH NAME
STREET\00000000\00000000
SCALES: HORZ: 1" = 20'
VERT: N/A

DWN BY: STAFF
CKD BY: PARKER
APD BY: PARKER
DATE: 09/2019

PROJECT
44th & VIRGINIA
FORCE MAIN REPLACEMENT

PLAN NO: 0000
SHEET
1

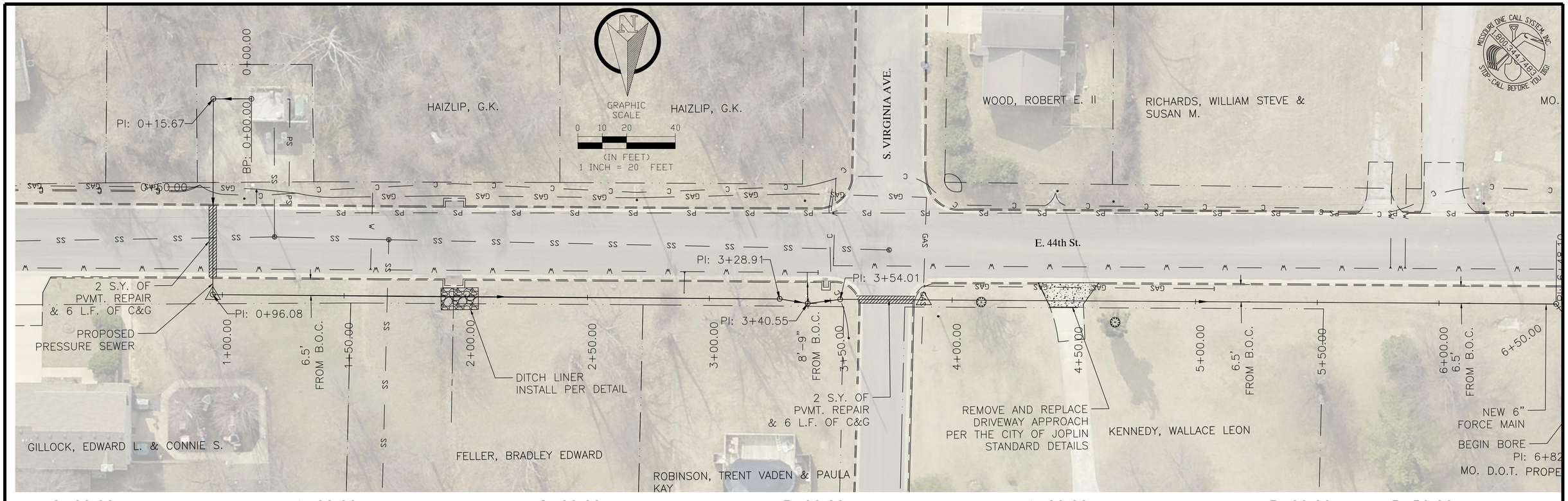

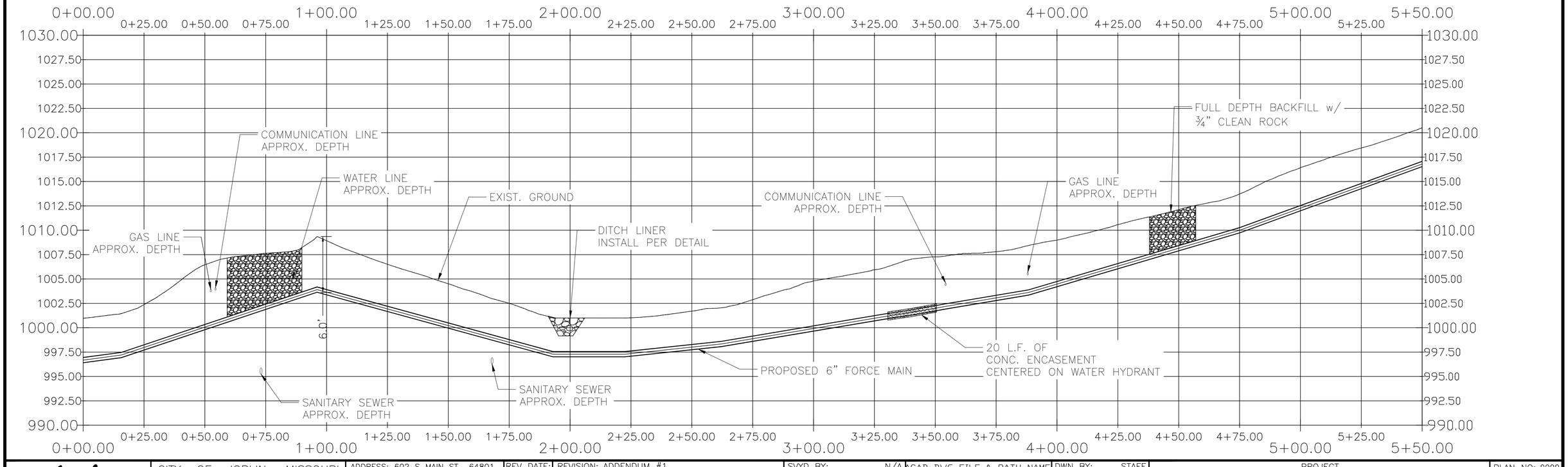

44th & Virginia Lift Station coty.dwg

CITY OF Joplin	CITY OF JOPLIN, MISSOURI DEPT OF PUBLIC WORKS DIVISION OF ENGINEERING	ADDRESS: 602 S MAIN ST 64801 PH NO: 417-624-0820 EXT 530 FAX NO: 417-625-4738 E-MAIL: CPARKER@JOPLINMO.ORG	REV DATE: 9-16-19	REVISION: ADDENDUM #1 ADDENDUM #1	SVYD BY: N/A PNT FILE: N/A.TXT SVY DATE: N/A ENGINEER: PARKER	ACAD DWG FILE & PATH NAME STREET\00000000\00000000 SCALES: HORZ: 1" = 20' VERT: N/A	DWN BY: STAFF CKD BY: PARKER APD BY: PARKER DATE: 09/2019	PROJECT 44th & VIRGINIA FORCE MAIN REPLACEMENT	PLAN NO: 0000 SHEET 2

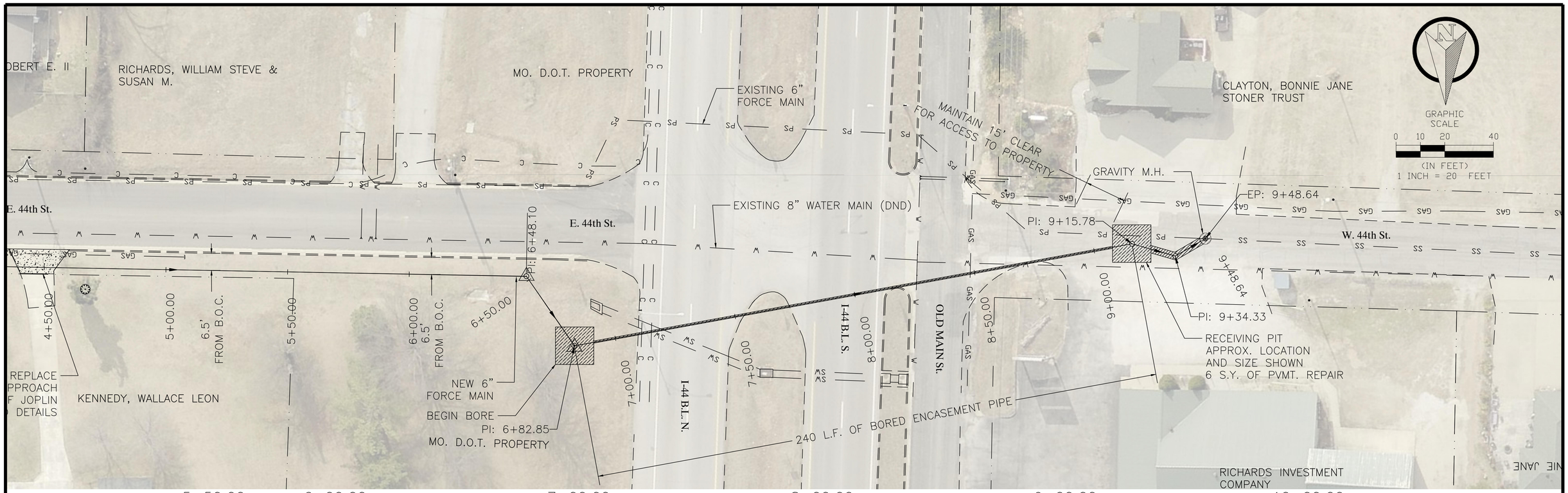

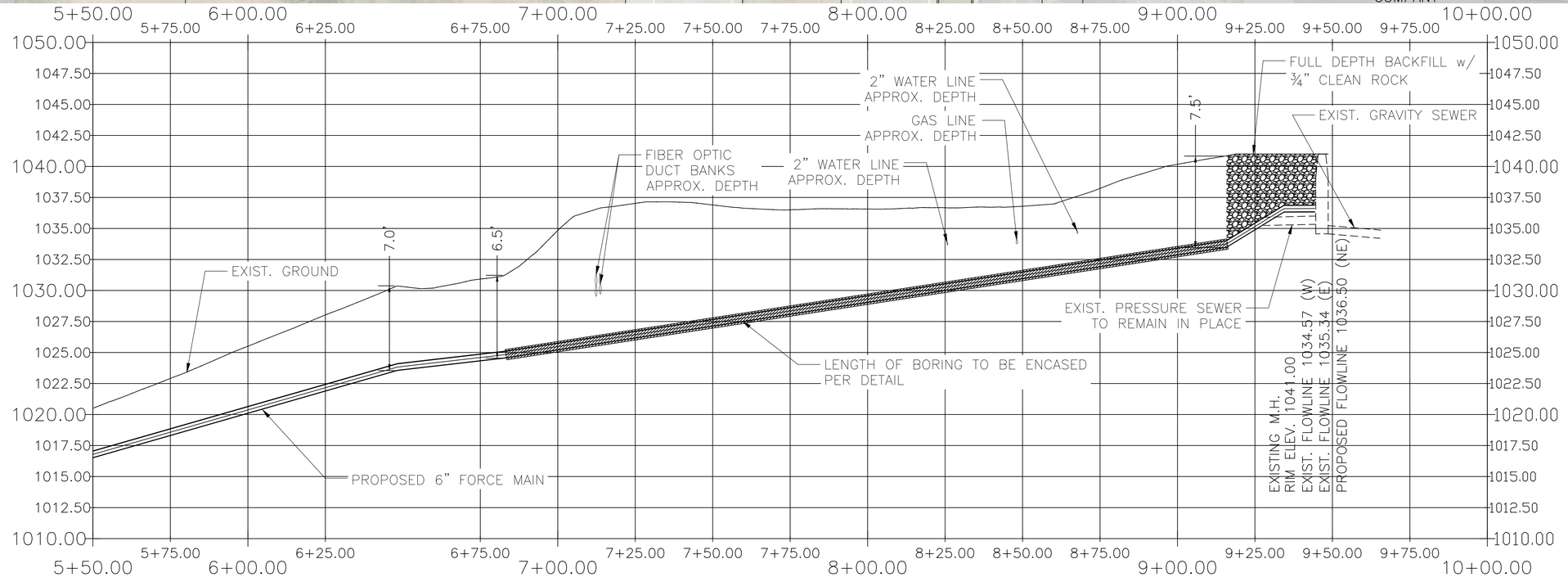

44th & Virginia Lift Station coty.dwg

MISSOURI ONE CALL SYSTEM, INC. 1-800-344-7483 STOP - CALL BEFORE YOU DIG!

CITY OF Joplin

CITY OF JOPLIN, MISSOURI
DEPT OF PUBLIC WORKS
DIVISION OF ENGINEERING

ADDRESS: 602 S MAIN ST 64801
PH NO: 417-624-0820 EXT 530
FAX NO: 417-625-4738
E-MAIL: CPARKER@JOPLINMO.ORG

REV DATE:	REVISION: ADDENDUM #1
9-16-19	ADDENDUM #1

SVYD BY: N/A
PNT FILE: N/A.TXT
SVY DATE: N/A
ENGINEER: PARKER

ACAD DWG FILE & PATH NAME: STREET\00000000\00000000
SCALES: HORZ: 1" = 20' VERT: N/A

DWN BY: STAFF
CKD BY: PARKER
APD BY: PARKER
DATE: 09/2019

PROJECT
44th & VIRGINIA
FORCE MAIN REPLACEMENT

PLAN NO: 0000
SHEET 3

CITY STANDARD DETAILS	SAN-01
	SAN-05
	SAN-19

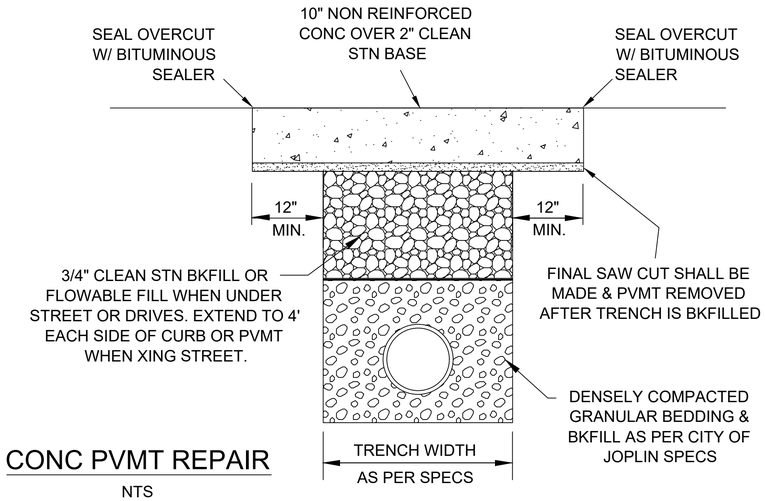

CONC PVMT REPAIR

NTS

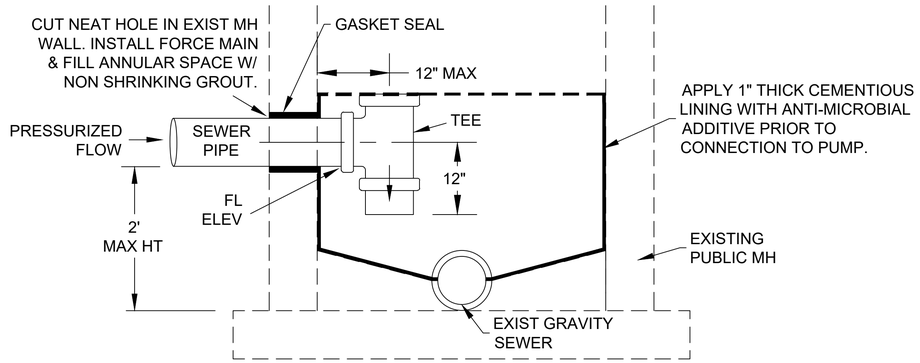

PUBLIC PRESSURE MH CONNECTION DETAIL

N.T.S.

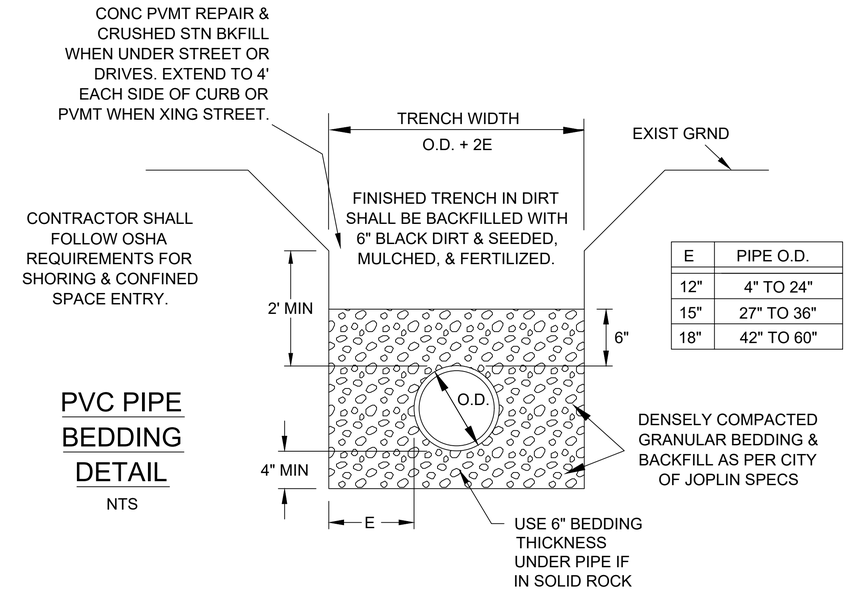

E	PIPE O.D.
12"	4" TO 24"
15"	27" TO 36"
18"	42" TO 60"

PVC PIPE BEDDING DETAIL

NTS

NOTE:
FOR SANITARY SEWER LATERAL PIPES USE ¾" CLEAN ROCK OR APPROVED EQUIVALENT REQUIRED UNDER THE FULL LENGTH OF THE INSTALLED PIPE.

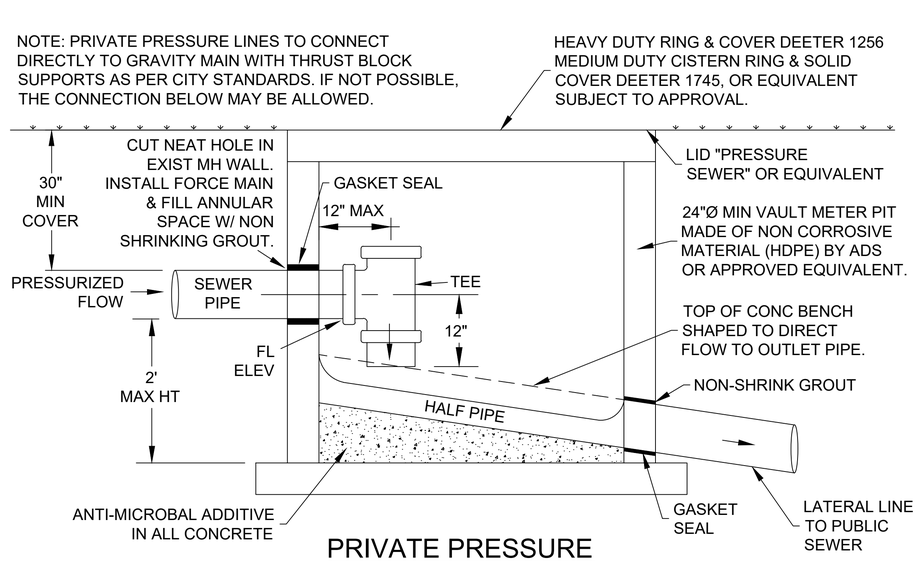

PRIVATE PRESSURE MH CONNECTION DETAIL

N.T.S.

MISSOURI ONE CALL SYSTEM, INC. 1-800-344-7483 STOP-CALL BEFORE YOU DIG!

44th & Virginia Lift Station coty.dwg

CITY OF Joplin
CITY OF JOPLIN, MISSOURI
DEPT OF PUBLIC WORKS
DIVISION OF ENGINEERING
ADDRESS: 602 S MAIN ST 64801
PH NO: 417-624-0820 EXT 530
FAX NO: 417-625-4738
E-MAIL: CPARKER@JOPLINMO.ORG

REV DATE:	REVISION: ADDENDUM #1
9-16-19	ADDENDUM #1

SVYD BY:	N/A
PNT FILE:	N/A.TXT
SVY DATE:	N/A
ENGINEER:	PARKER
ACAD DWG FILE & PATH NAME	STREET\00000000\00000000
SCALES:	HORZ: N/A VERT: N/A
DWN BY:	STAFF
CKD BY:	PARKER
APD BY:	PARKER
DATE:	09/2019

PROJECT
44th & VIRGINIA
FORCE MAIN REPLACEMENT

PLAN NO: 0000
SHEET
4

THRUST BLOCKS SHALL REST ON
UNDISTURBED SOIL & BE
POURED CONC., 3000 PSI

FITTING SHALL BE DOUBLE WRAPPED
W/ POLYETHYLENE PRIOR TO
POURING THRUST BLOCKS.

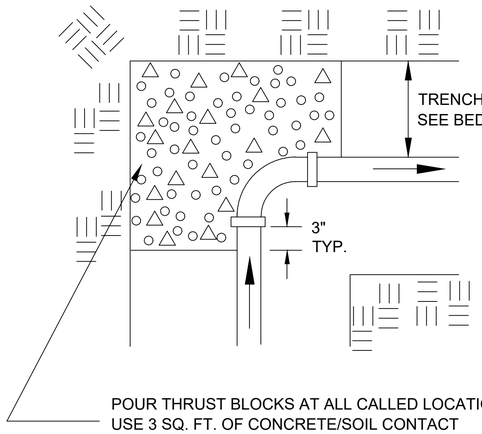

POUR THRUST BLOCKS AT ALL CALLED LOCATIONS.
USE 3 SQ. FT. OF CONCRETE/SOIL CONTACT
PER THRUST BLOCK FOR EACH BLOCK

THRUST BLOCK DETAIL

N.T.S.

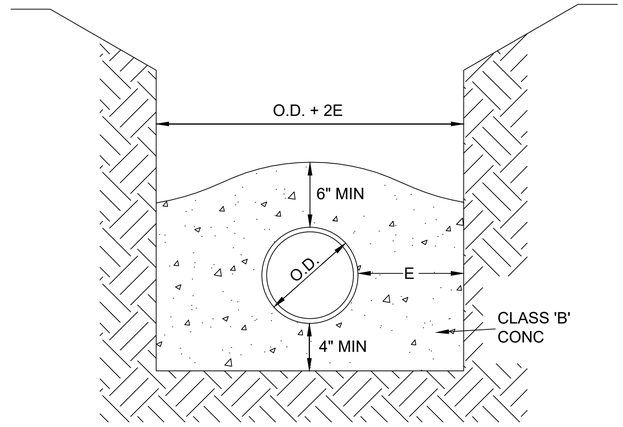

E	PIPE O.D.
12"	4" TO 24"
15"	27" TO 36"
18"	42" TO 60"

CONC ENCASEMENT

N.T.S.

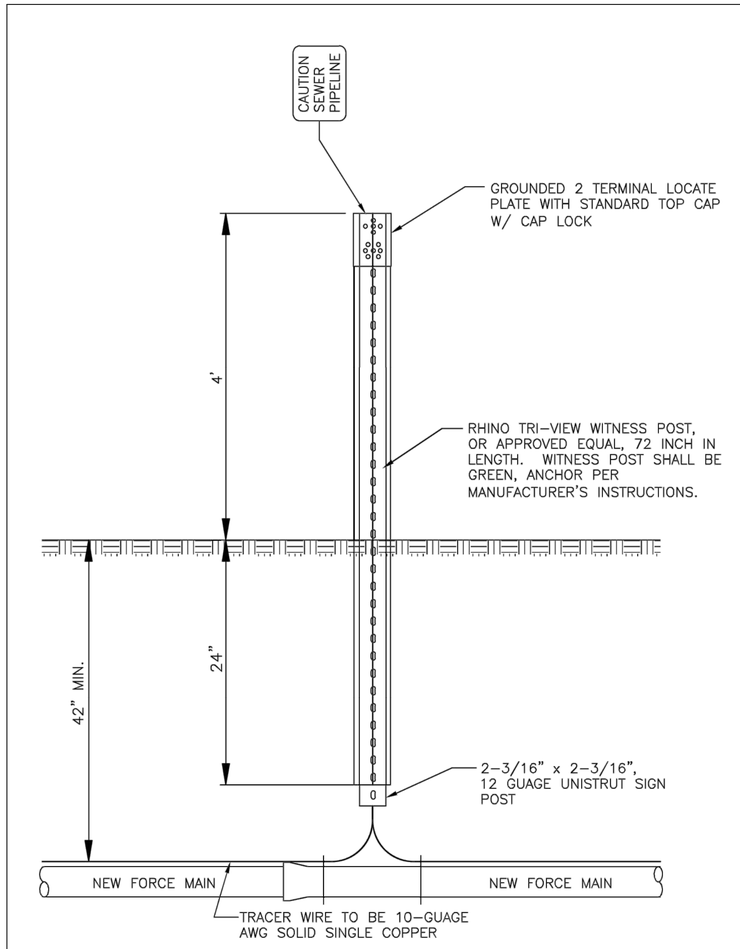

* SPACING TO BE APPROXIMATELY EVERY 500 FEET
AND AT MAJOR DEFLECTIONS. ALL COST ASSOCIATED
WITH WITNESS POSTS SHALL BE INCIDENTAL TO FORCE
MAINS.

WITNESS POST WITH TRACER WIRE ACCESS BOX

MISSOURI ONE CALL SYSTEM, INC.
1-800-344-7483
STOP. CALL BEFORE YOU DIG!

44th & Virginia Lift Station coty.dwg

CITY OF Joplin	CITY OF JOPLIN, MISSOURI DEPT OF PUBLIC WORKS DIVISION OF ENGINEERING	ADDRESS: 602 S MAIN ST 64801 PH NO: 417-624-0820 EXT 530 FAX NO: 417-625-4738 E-MAIL: CPARKER@JOPLINMO.ORG	REV DATE: 9-16-19	REVISION: ADDENDUM #1 ADDENDUM #1	SVYD BY: N/A PNT FILE: N/A.TXT SVY DATE: N/A ENGINEER: PARKER	ACAD DWG FILE & PATH NAME STREET\00000000\00000000 SCALES: HORZ: N/A VERT: N/A	DWN BY: STAFF CKD BY: PARKER APD BY: PARKER DATE: 09/2019	PROJECT 44th & VIRGINIA FORCE MAIN REPLACEMENT	PLAN NO: 0000 SHEET 5

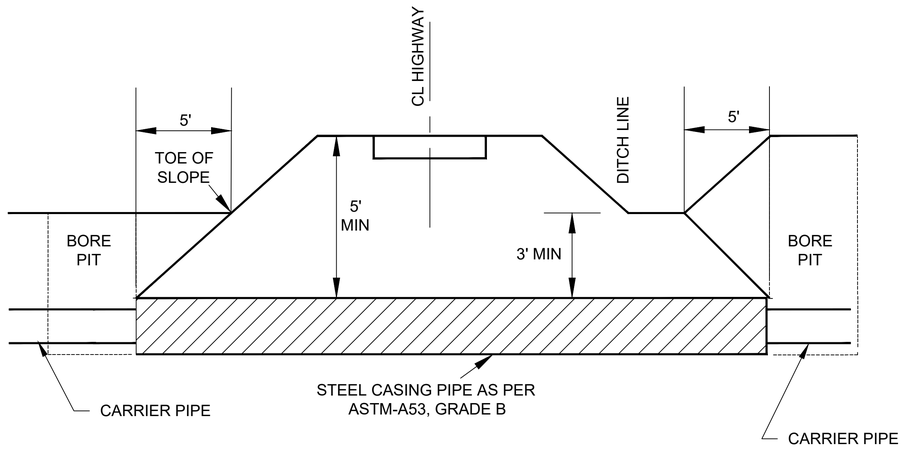

HWY XING

N.T.S.

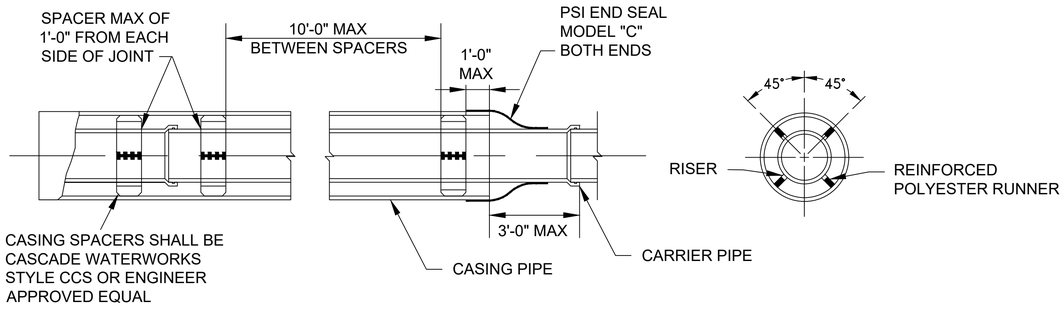

NOTES:

1. SEAL BOTH ENDS OF CASING PIPE W/ WATERTIGHT NEOPRENE ATTACHED WITH 2" STEEL BANDS.
2. ENDS SHALL BE SEALED TO PREVENT THE ENTRANCE OF FOREIGN MATERIAL, BUT SHALL NOT BE TIGHTLY SEALED. POURED CONC CAPS SHALL NOT BE ALLOWED.
3. UTILIZE PIPE SPACERS PER MANUFACTURER'S RECOMMENDATIONS.

PIPE CASING & END SEAL

N.T.S.

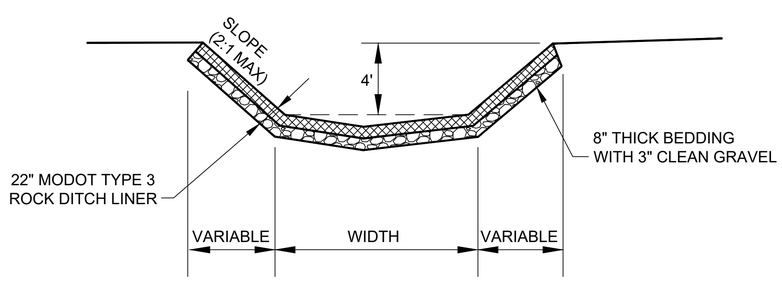

TYPICAL DITCH LINER RIPRAP INSTALLATION

N.T.S.

44th & Virginia Lift Station coty.dwg

CITY OF Joplin
CITY OF JOPLIN, MISSOURI
DEPT OF PUBLIC WORKS
DIVISION OF ENGINEERING
ADDRESS: 602 S MAIN ST 64801
PH NO: 417-624-0820 EXT 530
FAX NO: 417-625-4738
E-MAIL: CPARKER@JOPLINMO.ORG

REV DATE:	REVISION: ADDENDUM #1
9-16-19	ADDENDUM #1

SVYD BY:	N/A
PNT FILE:	N/A.TXT
SVY DATE:	N/A
ENGINEER:	PARKER
ACAD DWG FILE & PATH NAME	STREET\00000000\00000000
SCALES:	HORZ: N/A VERT: N/A
DWN BY:	STAFF
CKD BY:	PARKER
APD BY:	PARKER
DATE:	09/2019

PROJECT
44th & VIRGINIA
FORCE MAIN REPLACEMENT

PLAN NO: 0000
SHEET
6

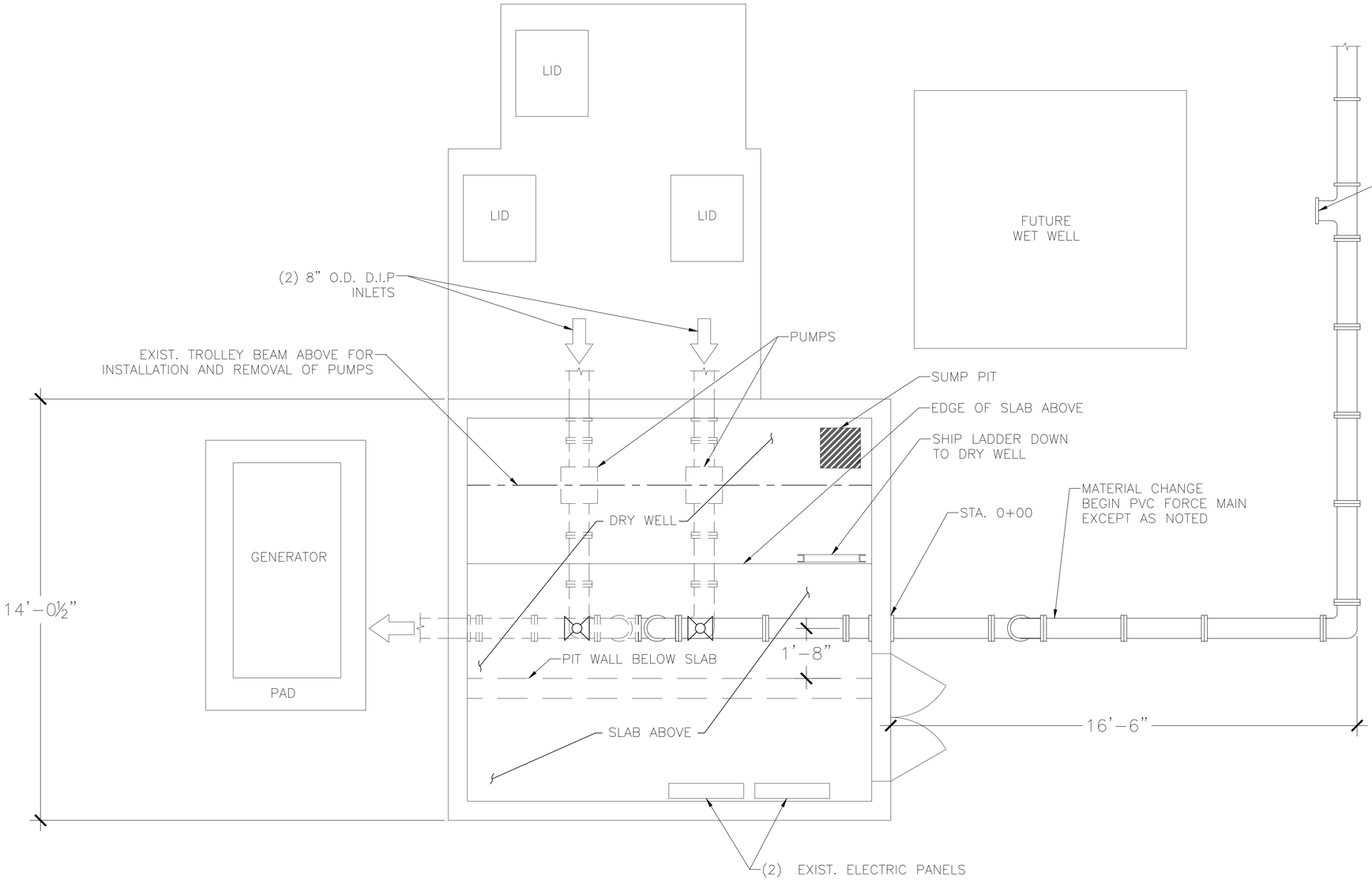

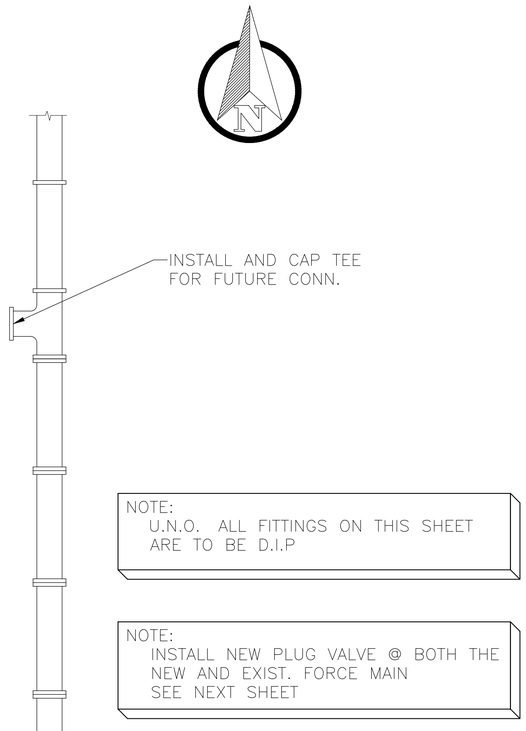

NOTE:
U.N.O. ALL FITTINGS ON THIS SHEET
ARE TO BE D.I.P

NOTE:
INSTALL NEW PLUG VALVE @ BOTH THE
NEW AND EXIST. FORCE MAIN
SEE NEXT SHEET

44th STREET & VIRGINIA LIFT STATION
PLAN VIEW

44th & Virginia Lift Station coty.dwg

CITY OF Joplin	CITY OF JOPLIN, MISSOURI DEPT OF PUBLIC WORKS DIVISION OF ENGINEERING	ADDRESS: 602 S MAIN ST 64801 PH NO: 417-624-0820 EXT 530 FAX NO: 417-625-4738 E-MAIL: CPARKER@JOPLINMO.ORG	REV DATE: 9-16-19	REVISION: ADDENDUM #1 ADDENDUM #1	SVYD BY: N/A PNT FILE: N/A.TXT SVY DATE: N/A ENGINEER: PARKER	ACAD DWG FILE & PATH NAME STREET\00000000\00000000 SCALES: HORZ: N/A VERT: N/A	DWN BY: STAFF CKD BY: PARKER APD BY: PARKER DATE: 09/2019	PROJECT 44th & VIRGINIA FORCE MAIN REPLACEMENT	PLAN NO: 0000 SHEET 7

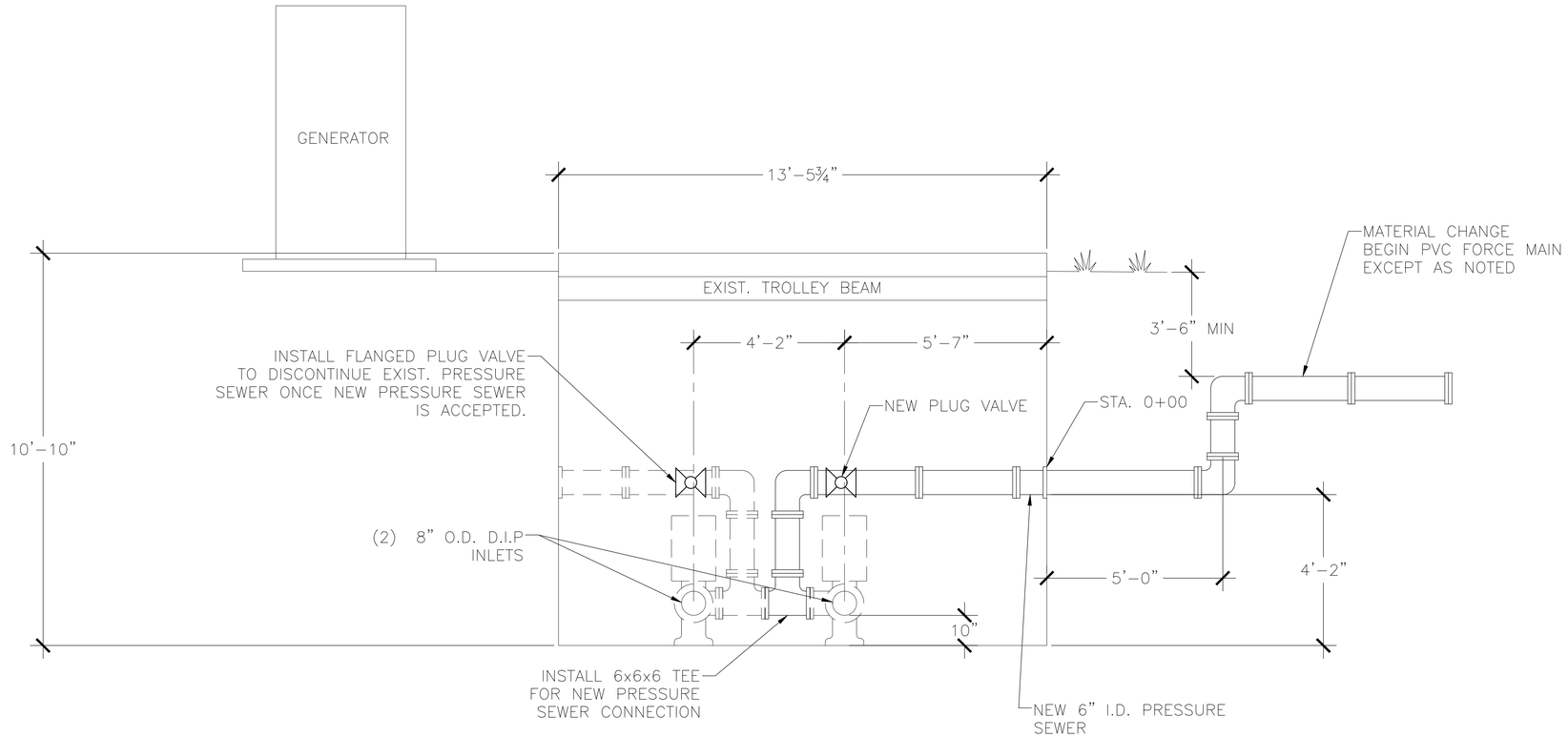

NORTH WALL OF 44th STREET & VIRGINIA LIFT STATION
LOOKING NORTH

44th & Virginia Lift Station coty.dwg

CITY OF Joplin	CITY OF JOPLIN, MISSOURI DEPT OF PUBLIC WORKS DIVISION OF ENGINEERING	ADDRESS: 602 S MAIN ST 64801 PH NO: 417-624-0820 EXT 530 FAX NO: 417-625-4738 E-MAIL: CPARKER@JOPLINMO.ORG	REV DATE: 9-16-19	REVISION: ADDENDUM #1 ADDENDUM #1	SVYD BY: N/A PNT FILE: N/A.TXT SVY DATE: N/A ENGINEER: PARKER	ACAD DWG FILE & PATH NAME STREET\00000000\00000000 SCALES: HORZ: N/A VERT: N/A	DWN BY: STAFF CKD BY: PARKER APD BY: PARKER DATE: 09/2019	PROJECT 44th & VIRGINIA FORCE MAIN REPLACEMENT	PLAN NO: 0000 SHEET 8